A Division of Thiessen Products, Inc.

Instruction Sheet For Tool No. 5835

JIMS® MILWAUKEE-EIGHT® "ON BIKE" VALVE SPRING COMPRESSOR

WARNING: A CONSTANT AIR SUPPLY MUST BE MAINTAINED WHILE VALVE SPRING KEEPERS ARE REMOVED TO PREVENT THE VALVE FROM SLIPPING INTO CYLINDER. HEAD REMOVAL WILL BE REQUIRED IF VALVE FALLS INTO CYLINDER.

1. Remove rocker box and cover according to the HD Service Manual.

2. Remove rocker arm assembly according to the HD Service Manual.

3. Remove rocker arm shaft from rocker arm assembly. Wipe clean with a clean towel, lightly lubricate with clean oil.

PARTS AVAILABLE SEPARATELY

NO.	QTY.	DESCRIPTION	PART NO.
1	1	VALVE SPRING COMPRESSOR FRT	5835-1
2	1	VALVE SPRING COMPRESSOR REAR	5835-2

4. Slide appropriate valve spring compressor tool onto rocker arm shaft as shown in **Figure 2**. Refer to **Figure 1** for Spring Compressor Orientation, to determine the correct compressor for your application. The **5835-1** Compressor is used on the valve springs for the front cylinder exhaust, and rear cylinder intake. The **5835-2** Compressor is used on the valve springs for the front cylinder intake, and the rear cylinder exhaust.

Tools Required

- Part No.5835 JIMS Valve Spring Compressor Tool
- 3/8" Drive Ratchet or Breaker Bar
- 3/8" Drive Short Extension
- JIMS Part No.782 or 10mm Bleed Off Test Fitting.
- Magnetic Tip (Optional)

FIG. 1

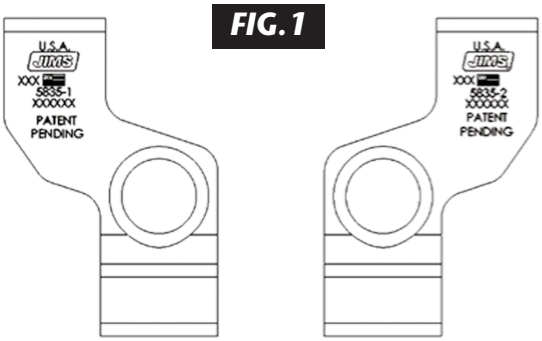

FRONT EXHAUST
REAR INTAKE

FRONT INTAKE
REAR EXHAUST

FIG. 2

NOTE: PLEASE READ ALL INSTRUCTIONS COMPLETELY BEFORE PERFORMING ANY WORK! IF YOU DO NOT KNOW WHAT YOU ARE DOING, DO NOT DO IT!

No information in this instruction sheet pertaining to motorcycle repair is represented as foolproof or even altogether safe. Even something safe, done incorrectly or incompletely can and will backfire. You and only you are responsible for the safety of your repair work and for you understanding the application and use of repair equipment, components, methods and concepts.

Each and every step this tool is designed to do must be carefully and systematically performed safely by you. All information listed in this instruction sheet has been tested, re-tested and used daily in JIMS® Research and Development Department.

ALWAYS WEAR SAFETY GLASSES OR OTHER FACE AND EYE PROTECTION SUCH AS FULL FACE SHIELD. JIMS® IS NOT RESPONSIBLE FOR DAMAGE, INJURY, OR YOUR WORK. JIMS® IS NOT RESPONSIBLE FOR THE QUALITY AND SAFETY OF YOUR WORK.

A Division of Thiessen Products, Inc.

Instruction Sheet For Tool No. 5835

5. Align rocker arm shaft with flats upward and insert and tighten the rocker arm bolts per the HD Service Manual. See **Figure 3**.

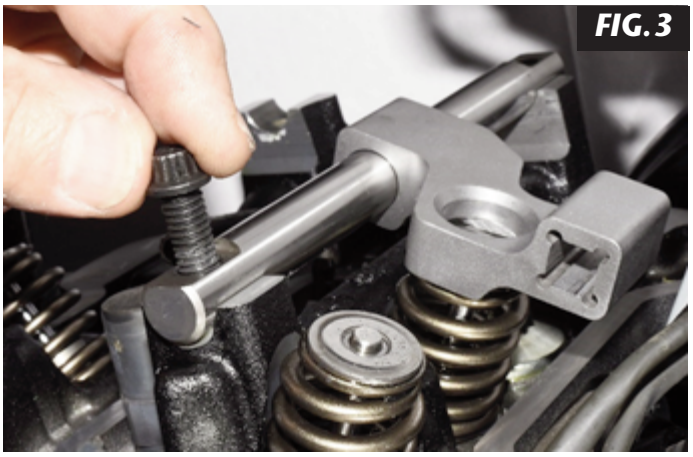
FIG.3

6. Install a 10mm bleed off test fitting, or JIMS Tool **Part No.782** (not included) into the spark plug hole and connect to 100 PSI air supply. The piston may be forced to the bottom of its travel by the air pressure. **Figure 4** and **Figure 5**.

WARNING: A constant air supply must be maintained to prevent valve from slipping into the cylinder when the valve spring keepers are removed.

FIG.4

FIG.5

CAUTION: Wear safety glasses over your eyes.
See JIMS® catalog for Hundreds of top quality professional tools.
The last tools you will ever need to buy.

Instruction Sheet For Tool No. 5835

7. Align valve spring compressor with appropriate valve by rotating the compressor tool up and sliding along the rocker arm shaft. Place the ramps on the bottom of spring compressor onto the valve spring cap. See **Figure 6.**

FIG.6

8. Prepare a 3/8" drive socket wrench or breaker bar by adding a short 3/8" extension.

9. Insert the 3/8" drive socket wrench or breaker bar into spring compressor tool. Rotate the wrench to compress the valve spring. You must maintain tension on the wrench in order to maintain spring compression. See **Figure 7.**

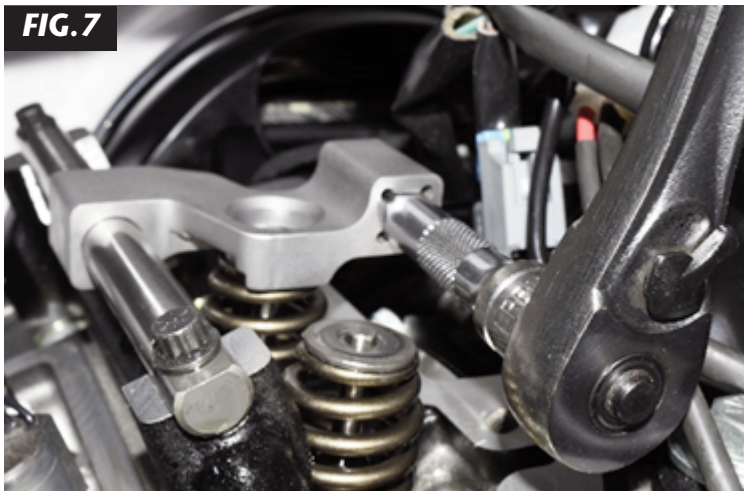
FIG.7

CAUTION: Wear safety glasses over your eyes.
See JIMS® catalog for Hundreds of top quality professional tools.
The last tools you will ever need to buy.

A Division of Thiessen Products, Inc.

Instruction Sheet For Tool No. 5835

10. With tension applied, remove valve spring keepers using a magnetized tool. **See Figure 8**.

FIG.8

11. Slowly release tension to remove load from the valve spring compressor.

12. Remove 3/8" extension and move the compressor tool out of the way to complete working on the spring. See **Figure 9.**

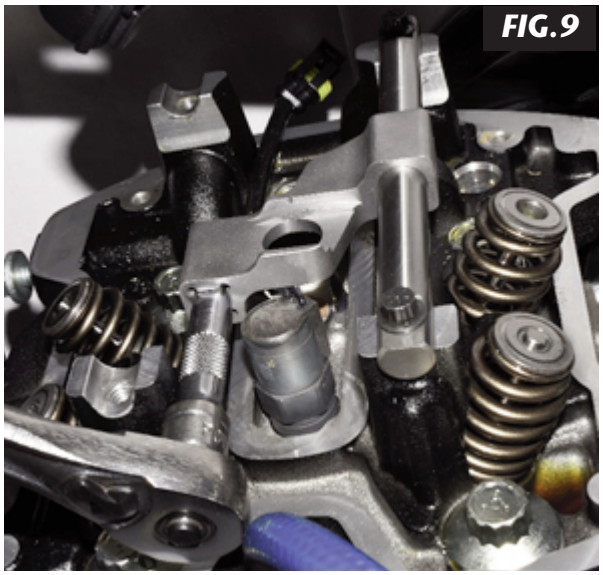
FIG.9

CAUTION: Wear safety glasses over your eyes.
See JIMS® catalog for Hundreds of top quality professional tools.
The last tools you will ever need to buy.

A Division of Thiessen Products, Inc.

Instruction Sheet For Tool No. 5835

13. To reinstall valve spring, reverse the procedure shown. To aid in placing the valve spring keepers, place a small amount of grease on the end of the valve stem as shown in **Figure 10.**

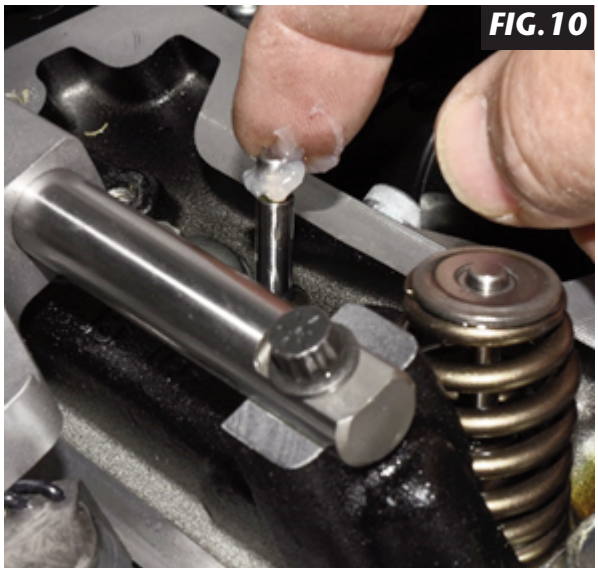
FIG. 10

14. Unbolt rocker arm shaft and remove tool No. 5835.

15. Reassemble rocker arm assembly and rockers covers per your HD Service Manual.

CAUTION: Wear safety glasses over your eyes.
See JIMS® catalog for Hundreds of top quality professional tools.
The last tools you will ever need to buy.

555 Dawson Drive, Camarillo, CA 93012 Phone 805-482-6913 • Fax 805-482-9224
Visit us on the web at WWW.JIMSUSA.COM