

2020

MAY 2020 UPDATE

S&S® Cycle Dealer Catalog • Late Model
Parts & Accessories for 1999–and later models*
*including 1986 & later xl and Indian® models

PROVEN S&S PERFORMANCE

LOOKING FOR REPLACEMENT PARTS?

2017–2020 M8 Engines

Air Cleaner Kit, Stealth 37
Cam Kit—Chain 51
Cam Kit—Gear 51
Cam Support Plate 50
Exhaust, Grand National® 2:2 Exhaust System 45
Exhaust, Grand National® 4" Mufflers 42
Exhaust, Grand National® EC Slip-On Muffler 48
Exhaust, Grand National® Muffler for 2018–'19 Softail® Models *(Except Fat Bob® Models)* 41
Exhaust, Grand National® Muffler for 2018–'20 Fat Bob® 40
Exhaust, Mk45 4.5" Muffler 39
Exhaust, Mk 45 Replacement Muffler System for El Dorado 50-State Exhaust System 39
Exhaust, Power Tune® Dual Replacement Header System for El Dorado 50-State Exhaust System 47
Exhaust, Shadow Pipe 44
Exhaust, Sidewinder 2:1 Exhaust System 43
Exhaust, Slash Cut 4" Mufflers 42
Exhaust, Slash-Cut EC Slip-On Muffler 48
Exhaust, Slash Cut Muffler for 2018–'19 Softail® Models *(Except Fat Bob® Models)* 41
Exhaust, SuperStreet 2:1 Exhaust System 38
Oil Pump 49

2007–2016 big twins

Air Cleaner, Classic Teardrop for S&S® Single Bore EFI 136
Air Cleaner, Classic Teardrop for Stock Fuel Systems 138
Air Cleaner Kits, Stealth 133
Cam Plate, TC3 125
Crankcase, Super Stock T2 120
Cylinder Heads, B3 126
Cylinder Heads, B2 127
Cylinder Heads, Super Stock® 128
Exhaust, Grand National® 2:2 Exhaust 145
Exhaust, Grand National® 4" Mufflers 143
Exhaust, Grand National® Slip-On Mufflers for Dyna® Models 141
Exhaust, Mk45 4.5" Muffler 142
Exhaust, Power Tune® Dual Header Replacements 146
Exhaust, Sidewinder® 2:1 Exhaust 144
Exhaust, Slash Cut 4" Mufflers 143
Exhaust, Slash Cut Slip-On Mufflers for Dyna® Models 140
Flywheel, 3-Piece 123
Flywheel, 5-Piece 122
Oil Pump, TC3 124
Rocker Cover, Die-Cast 131
Rocker Cover, Billet 132
Single Bore Tuned Induction System 134
Single Bore Tuned Induction for Throttle by Wire 135
Throttle Body, Single Bore EFI 119
Throttle Body, Throttle Hog Cable-Operated 118
Valve Springs 130

1999–2006 big twins

Air Cleaner, Classic Teardrop for S&S® Single Bore EFI 232
Air Cleaner, Stealth 225
Air Cleaner for Stock Fuel Systems 228
Air Cleaner, Super E & G 230
Cam Plate, TC3 216
Carburetor, Super E & G 236
Crankcase 212
Crankcase Breather Reed Valve 238
Cylinder Heads, B2 218
Cylinder Heads, B3 219
Cylinder Heads, Super Stock® 220
Exhaust, Grand National® 4" Mufflers 239
Exhaust, Grand National® Slip-On Mufflers for Dyna® Models 240
Exhaust, Mk45 4.5" Mufflers 238
Exhaust, Power Tune® Dual Header 242
Exhaust, Sidewinder® 2:1 Exhaust System 241
Exhaust, Slash Cut 4" Mufflers 239
Exhaust, Slash Cut Slip-On Mufflers for Dyna® Models 240
Flywheel, 3-Piece 214
Flywheel, 5-Piece 215
Oil Pump, TC3 217
Rocker Cover, Die-Cast 223
Rocker Cover, Billet 224
Single Bore Tuned Induction System 226
Throttle Body 234
Valve Springs 222

HD® Sportster® Models

Air Cleaner, Classic Teardrop 292
Air Cleaner, Classic Teardrop for Stock Fuel Systems 296
Air Cleaner, Stealth 291
Air Cleaners, Super E & G 298
Carburetor, Super E & G 300
Crankcase 286
Cylinder Head, Super Stock® 288
Exhaust, SuperStreet 2:1 284
Flywheel 285
Rocker Cover 290
Single Bore Tuned Induction System 294
Valve Springs 302

HD® Street® & Street Rod™ Models

Air Cleaner, Stealth for Street® Models 308
for Street Rod™ Models 309
Exhaust, Grand National 4" Muffler 310

Indian® Models

Air Cleaner Kit for Indian® Models 317
Exhaust, Grand National® 2:2 High 319
Exhaust, Grand National® Slip-on Muffler 318

S&S LATE MODEL CONTENTS:

MILWAUKEE-EIGHT® ENGINES
Exciting new performance products for motorcycles with the HD® Milwaukee Eight® engine

2007–2016 BIG TWIN
Performance upgrades for 2007–'17 HD® big twins with Twin Cam 96™, 103™, 110™ engines. From the basics like slip-on mufflers and air cleaners to camshafts, fuel systems, and big bore kits, to complete big inch engines. Replacement parts and service items too!

1999–2006 BIG TWIN
Everything you need to upgrade and maintain 1999–'06 HD® big twins with Twin Cam 88® and Twin Cam 88B™ engines. Exhaust, intake, fuel systems, cams, big bore kits, and complete engines. Also many service and replacement components.

SPORTSTER® & BUELL®
HD® Sportster® motorcycles are becoming increasingly popular. S&S offers a lot of options for increasing displacement and performance. Carburetors, air cleaners, big bore kits, cam shafts, cylinder heads, and much more.

STREET®
Performance products for Harley-Davidson® Street® & Street Rod™ engines.

INDIAN®
Performance parts for Indian® motorcycles.

TOOLS & SHOP SUPPLIES
Every job is easier with the right tools. Keep your bike running in top condition! You'll find special tools, shop supplies and fluids you need, whether you are a "do-it-yourselfer" or a professional servicing technician.

COMPANY POLICY & WARRANTY
Information on sales, ordering, shipments, S&S internet policy, and special orders. Warranty policies on all S&S parts and S&S assembled engines.

APPENDIX & INDEX
Useful information for our customers: identify S&S components, measuring manifolds, calculating cylinder head bolt lengths, and an easy to use index to find products in this catalog.

DISCLAIMER: The names Harley, Harley-Davidson, Buell, H-D, and all trademarks owned by Harley-Davidson and its affiliated companies, and all Harley-Davidson and Buell part numbers and model designations are used for reference only. S&S Cycle is in no way associated with or authorized by Harley-Davidson Motor Co. to manufacture and sell any of the engine parts described in this catalog.

CUSTOMER SUPPORT HOURS: MONDAY–FRIDAY 8:00A.M.–5:00P.M. CST

Calls should be directed to (608) 627-1497. International customers should use this number to place orders from outside the United States. This number should also be used if you have a technical or warranty question, or to contact the Accounting departments. This is not a toll-free number.

S&S Cycle, Inc. reserves the right to change prices, terms, availability, and specifications without prior notice.

A WORD ABOUT DYNO NUMBERS

With a motto like "Proven Performance®", which is a registered trademark of S&S® Cycle Inc., it is very important that we be able to back up our claims regarding performance. It is also vitally important to be able to evaluate new designs in our development process. One of the tools we depend on for both of these functions is the chassis dynamometer.



Something that needs to be understood about dynamometers is that the results from one dyno will not necessarily be identical to those from another dyno. So comparing results from different dynos is bound to create a certain amount of confusion. This is especially true with dynos from different manufacturers. However, results of tests run on the same machine can be compared with a high degree of confidence. We can determine, for example if a performance modification increased power or torque, but there is a problem if you expect absolute values.



There are several brands of dynamometers which are in common use in the performance industry. These dynos will yield very reliable values for comparison, especially when tests are performed on the same machine. However values obtained from these dynos may not always agree. Which value is correct? It depends on who you ask.

NO ABSOLUTES

In our literature and catalogs, we publish dyno results so our customers easily can see how our products improve performance over stock. However, it must be remembered that these are comparative values, and should not be taken as absolutes. If a similar or even identical engine or motorcycle is tested on another dynamometer, the results will more than likely differ.

SYMBOL KEY

CONFIGURE TO ORDER: CTO allows you to choose available options for a specific part or kit, and covers both "special order" parts and "made to order" kits. Some CTO kits have a base price with additional upcharges for the optional selections. In some cases, the entire price of a kit is determined by upcharges for the options selected. It is best to call an S&S customer service representative and configure the kit with exactly the options you want.

VIDEO If you see this icon, there is a video available.

These are our latest innovations to the market.

EMISSIONS SYMBOLS

Part numbers marked with this logo are replacement parts for specific S&S certified emission engines and are legal for sale and use on these engines. The number(s) listed by each logo in the catalog indicates the model(s) of S&S certified engines that use the part. Use the table below to reference your engine model to its number in the logo.

Example: This part is legal for use on V96E, V124C, and V124E engine models.

Engine Model Number	
V96E	1
V100C, V113E, V113C	2
V124E, V124C	3
X117E, X117C	4

Part numbers marked with this logo are legal to be sold for and used as replacement parts on Harley-Davidson® motorcycles in all 50 states. These parts may only be installed on a motorcycle model listed in the part's description. Selling or installing these parts on a pollution controlled motorcycle not listed is in violation of California and/or Federal emissions laws and could result in fines and penalties.

S&S Cycle's products designed to meet California's emissions standards.

S&S Cycle products that are EC-approved have an e mark from the European Commission in accordance with the mandatory members of the EU Directive and are legal for sale and use in Europe.

MISSION STATEMENT AND TRADEMARK INFORMATION

MISSION STATEMENT: Proven Performance® for the Powersports Industry.

DISCLAIMER: The names Harley, Harley-Davidson, Buell, H-D, and all trademarks owned by Harley-Davidson and its affiliated companies, and all Harley-Davidson and Buell part numbers and model designations are used for reference only. S&S Cycle is in no way associated with or authorized by Harley-Davidson Motor Co. to manufacture and sell any of the engine parts described in this catalog.

THE FOLLOWING ARE TRADEMARKS OF HARLEY-DAVIDSON® MOTORCYCLE COMPANY: BUELL® • Dyna® • Evolution® • Evo™ • Harley® • Harley-Davidson® • HD® • H-D® • Heritage Softail® • Milwaukee-Eight® • Screamin' Eagle® • Softail® • Sportster® • Twin Cam 88® • Twin Cam 88B™ • Twin Cam 96™ • Twin Cam 96B™ • Twin Cam 103™ • Twin Cam 110™ • Tri Glide™

Other trademarks mentioned in this catalog are the property of their respective owners and are used for reference only.
American Andrews Products • Delphi • Dynojet • Hitachi • Keihin • Kevlar • Magneti Marelli • • NHRA • Sunnen • SuperFlow • Tillotson • Timken • Viton

THE FOLLOWING ARE TRADEMARKS OF S&S CYCLE INC.

Body Parts • Dealer Focus • EZFI • Frame Lock • G-Extreme • Hot Set Up Kit • IST • Performance Times • Power Tune • Proven Performance • S&S • S&S Service & Speed Center • Sidewinder • SPO • Super Stock • X-Wedge • Flathead Power • Viola V-Twin

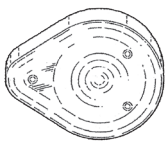

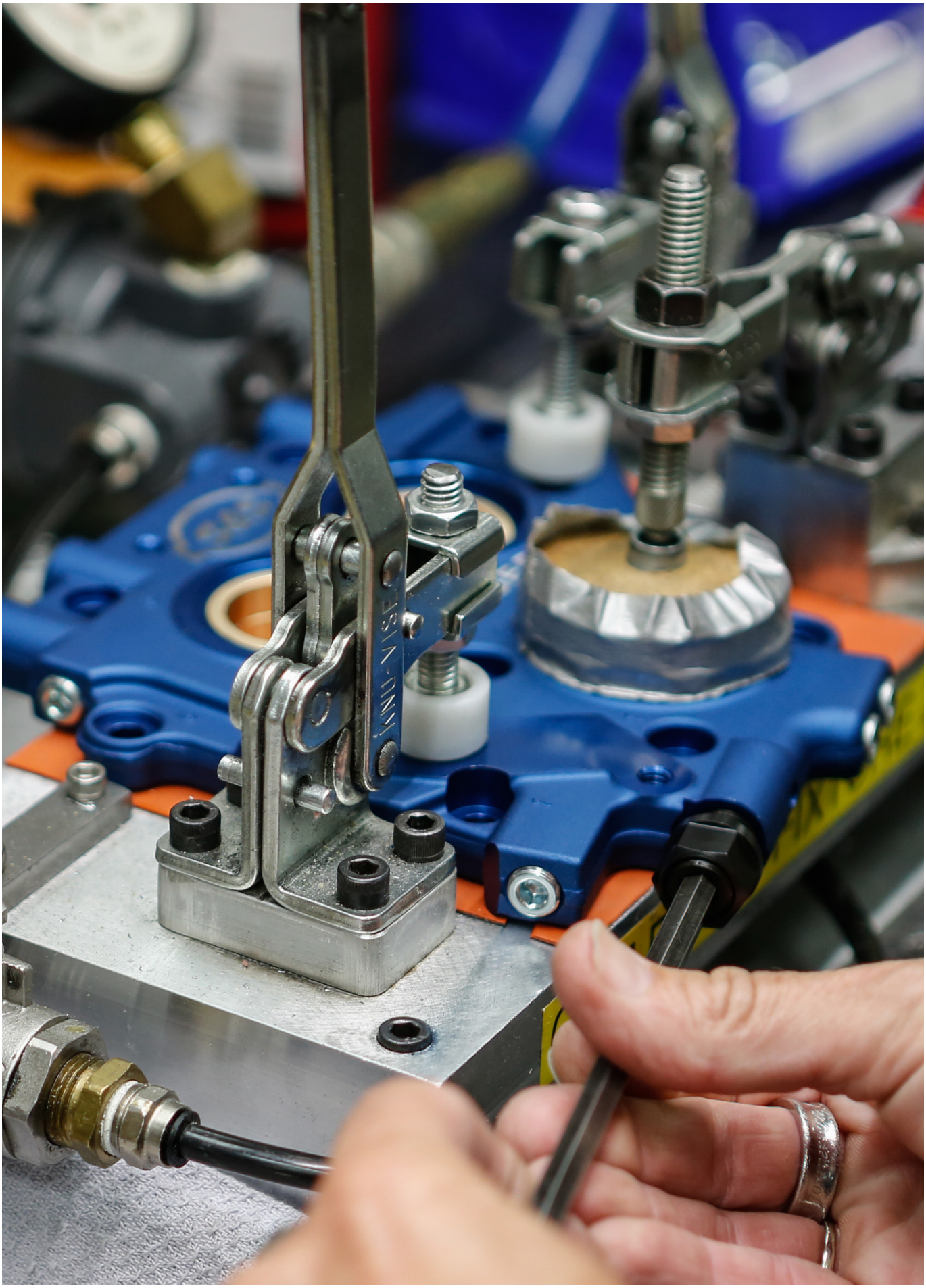

MILWAUKEE-EIGHT®



Performance Kits

124" Big Bore Kit 25
128" Big Bore Kit 25
Power Packs 28

Performance Parts

Air Cleaners 22
Camshafts 30
Cylinders 26
Exhaust 8
Gaskets 35
Oil 36
Oil Filters 36
Oil Pump 31
Pushrods 34
Tappets 33
Valve Springs 35

Replacement Parts..... 37

NEW FOR -FROM S&S CYCLE- 2020

GNX SLIP-ON MUFFLERS



FITMENT

- 2017–2020 M8 touring models

FEATURES AND BENEFITS

- 4.5" slip-on with premium fit, finish, sound, and power!
- Show quality chrome or OEM exact match black
- New, unique louvered baffle delivers a rowdier tone
- Removable dB Reducer



GNX SLIP-ON MUFFLERS

Finish	Part #
Black	**550-0990**
Chrome	**550-0991**

*Qualified manufacturer declared U.S. 50-State legal emissions replacement part on all MY 2017-2020 FL Touring models

NOTE: Does not fit trike models

⚠WARNING: Cancer and Reproductive Harm – www.P65Warnings.ca.gov



REPLACEMENT PARTS: SEE PAGE 46

Mk45 TOURING MUFFLERS

FITMENT

- 2017–2020 M8 touring models
  Does not fit Tri Glide® or Freewheeler models

FEATURES AND BENEFITS

- Bold 4.5" design — with stainless steel baffle and Race TEX cartridge packing
- Available in show quality chrome or ceramic black finish
- Choose from S&S Thruster or Tracer endcap designs in chrome or black
- SAE J2825 sound level compliant
- Removable dB reducer
- Made in USA!



Removable dB reducer

MK45 4.5" SLIP-ON MUFFLERS

Muffler Body Finish	Endcap Finish & Style	Part #
Chrome	Chrome Thruster	**550-0665**
	Black Highlight Machined Thruster	**550-0664**
	Chrome Tracer	**550-0669**
	Black Highlight Machined Tracer	**550-0668**
Black	Chrome Thruster	**550-0667**
	Black Highlight Machined Thruster	**550-0666**
	Chrome Tracer	**550-0671**
	Black Highlight Machined Tracer	**550-0670**

*Qualified manufacturer declared U.S. 50-State legal emissions replacement part on all MY 2017-2020 FL Touring models

⚠WARNING: Cancer and Reproductive Harm – www.P65Warnings.ca.gov



550-0665



550-0664



550-0667



550-0666



550-0669



550-0668



550-0671

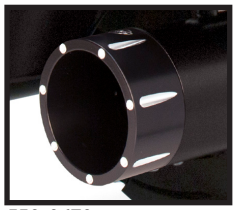

550-0670



REPLACEMENT PARTS: SEE PAGE 39

EL DORADO M8 HIGH PERFORMANCE EXHAUST SYSTEM—STREET LEGAL

- 50 State legal—*CARB compliant: EO# K-010-10*
- Improved power & torque for greater rideability
- Available in show quality chrome or ceramic black heat shields and muffler bodies
- Bold 4.5" mufflers with billet endcaps
- Highlight Machined Thruster and Tracer, as well as Chrome Tracer tip options
- O2 sensor location same as stock
- Includes adapters that allow use of wide band or stock O2 sensors
- Stainless steel header construction
- High flow cats increase exhaust flow for optimum torque
- Produces a deep bass rumble throughout the RPM range
- Relocation of cats to mufflers reduces rider heat
- Meets SAE J2825 sound standard
- Made in the USA!

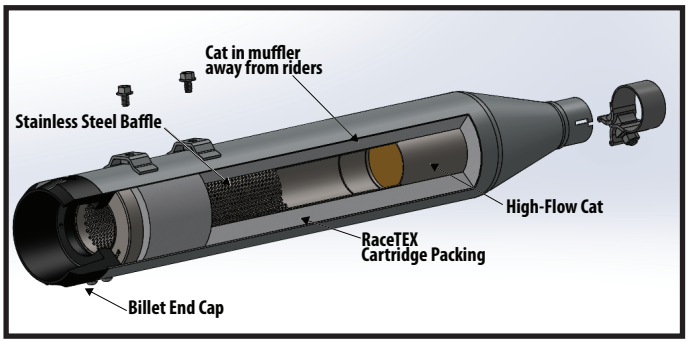

EL DORADO EXHAUST SYSTEM FOR 2017–'19 TOURING MODELS — STREET LEGAL

Finish	Endcap	Part #
Chrome	Black Highlight Machined Thruster	**550-0699B**
Black	Black Highlight Machined Thruster	**550-0700B**
Chrome	Black Highlight Machined Tracer	**550-0701B**
Black	Black Highlight Machined Tracer	**550-0702B**
NEW FOR 2020 Chrome	Chrome Tracer	**550-0851**

**NOTE: Does not fit Trike models*

Exempt from emissions tampering regulations under CARB EO# K-010-10 for all 2017-2019 FL Touring Models

⚠ WARNING: Cancer and Reproductive Harm – www.P65Warnings.ca.gov

CARB compliant
CARB EO K-010-10




Black w/Tracer


Black w/Thruster


Chrome w/Thruster

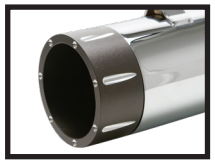
Chrome w/Tracer


Chrome w/Chrome Tracer

REPLACEMENT PARTS: SEE PAGE 47

GRAND NATIONAL® 4" SLIP-ON MUFFLERS
FOR 2017–2020 FLH TOURING MODELS



FITMENT
- 2017–2020 FLH touring models

FEATURES AND BENEFITS
- Show quality chrome or ceramic black finish
- Race inspired Grand National endcap
- High flowing baffle design
- Aggressive sound and excellent horsepower
- SAE J2825 sound level compliant
- Removable dB reducer
- Excellent choice for Trike models *(See chart)*
- Made in USA!



GRAND NATIONAL® 4" MUFFLERS FOR 2017–2020 TOURING M8 ENGINES* *EXCEPT FREEWHEELER® OR TRIKE MODELS*

Finish	Part #
Chrome	**550-0693**
Black	**550-0694**

GRAND NATIONAL® 4" MUFFLERS TOURING MUFFLERS FOR 2017–2020 TRIKE MODELS††

Chrome	**550-0689**
Black	**550-0690**

*Qualified manufacturer declared U.S. 50-State legal emissions replacement part on all MY 2017-2020 FL Touring models

††DISCLAIMER: NOT LEGAL FOR SALE OR USE IN CALIFORNIA ON ANY POLLUTION CONTROLLED MOTOR VEHICLES. Not legal for sale or use on EPA pollution controlled motorcycles originally equipped with mufflers containing catalyst. Qualified Manufacturer Declared Emissions Replacement Part on 2017 to 2020 Touring Trike Models Only

⚠WARNING: Cancer and Reproductive Harm – www.P65Warnings.ca.gov



REPLACEMENT PARTS: SEE PAGE 42

SLASH CUT 4" SLIP-ON MUFFLERS



FITMENT

- 2017–2020 touring models

FEATURES AND BENEFITS

- Classic slash cut styling
- Available in show chrome or ceramic black finish
- Stripped down styling
- Aggressive sound
- Economical price
- SAE J2825 sound level compliant
- Removable dB reducer included
- Excellent choice for Trike models *(See chart)*
- Made in USA!

SLASH CUT 4" TOURING MUFFLERS FOR 2017–2020 TOURING M8 ENGINES* *EXCEPT FREEWHEELER® OR TRIKE MODELS*

Finish	Part #
Chrome	**550-0695**
Black	**550-0696**

SLASH CUT 4" TOURING MUFFLERS FOR 2017–2020 TRIKE MODELS (SEE PAGE 56 FOR MORE DETAILS)††

Chrome	**550-0691**
Black	**550-0692**

*Qualified manufacturer declared U.S. 50-State legal emissions replacement part on all MY 2017-2020 FL Touring models

††DISCLAIMER: NOT LEGAL FOR SALE OR USE IN CALIFORNIA ON ANY POLLUTION CONTROLLED MOTOR VEHICLES. Not legal for sale or use on EPA pollution controlled motorcycles originally equipped with mufflers containing catalyst. Qualified Manufacturer Declared Emissions Replacement Part on 2017 to 2019 Touring Trike Models Only

⚠WARNING: Cancer and Reproductive Harm – www.P65Warnings.ca.gov



REPLACEMENT PARTS: SEE PAGE 42

SIDEWINDER 2:1 EXHAUST SYSTEM

FITMENT

- 2017–2020 M8 FL Models

FEATURES AND BENEFITS

- 2:1 styling for high-performance baggers
- High-flow cat
- Increased power and torque
- Available in show chrome or ceramic black finish
- Machined aluminum endcap
- Includes adapters that allow use of wide band or stock O2 sensors
- Stainless steel stepped header construction
- Deep 2:1 performance exhaust note
- SAE J2825 sound level compliant
- Removable dB reducer included *(Race only version)*
- Made in USA!



Removable dB reducer



SIDEWINDER by S&S CYCLE

CARB compliant
CARB EO K-010-14

See next page for Left Side *Shadow Pipe*

SIDEWINDER 2:1 EXHAUST SYSTEM FOR 2017–'20 M8 TOURING MODELS — STREET LEGAL†

Finish	Part #
Chrome	**550-0758C**
Black	**550-0759C**

SIDEWINDER 2:1 EXHAUST SYSTEM FOR 2017–2020 M8 TOURING MODELS — RACE ONLY††

Chrome	**550-0728**
Black	**550-0729**

†Exempt from emissions tampering regulations under CARB EO# K-010-14 for all 2017-2020 FL Touring Models

††DISCLAIMER: NOT LEGAL FOR SALE OR USE IN CALIFORNIA ON ANY POLLUTION CONTROLLED MOTOR VEHICLE. NOT LEGAL FOR SALE OR USE NATIONWIDE ON ANY FEDERAL POLLUTION CONTROLLED MOTOR VEHICLE UNDER THE CLEAN AIR ACT

⚠WARNING: Cancer and Reproductive Harm – www.P65Warnings.ca.gov



REPLACEMENT PARTS: SEE PAGE 43

SHADOW PIPE
FOR 1995–2020 TOURING MODELS WITH S&S SIDEWINDER® 2:1 EXHAUST

FEATURES AND BENEFITS
- Available in show chrome and ceramic black finish
- Shadow muffler fills left side cutout in extended bags when running Sidewinder 2:1
- Matching endcap for left side is a mirror image of right side Sidewinder 2:1 Cap
- 4.5" design
- All hardware included





2009–2020 TOURING MODELS EQUIPPED WITH S&S® SIDEWINDER® 2:1 EXHAUST	
Chrome	**550-0829**
Black	**550-0831**

If you have…			…you'll need
BIKE	FINISH	SIDEWINDER PART #	SHADOW PIPE PART #
2017–2020 touring model	Chrome	**550-0728**	**550-0829**
		550-0758C	
	Black	**550-0729**	**550-0831**
		550-0759C	



REPLACEMENT PARTS: SEE PAGE 44

SUPERSTREET 2:1 EXHAUST SYSTEM



NOTE:
Mid mounts require brake pedal kit (part # 560-0259A / msrp *$154.95*)

FITMENT

- 2018–2020 HD® Street Bob®, Low Rider®, Softail Slim®, Fat Bob®, Deluxe, Sport Glide® & Heritage® models®
- 2018–2020 HD® Softail® Fat Boy®, Breakout® & FXDR® models

FEATURES AND BENEFITS

- Classic 2:1 styling with world famous S&S performance!
- Fits floorboard and forward controls and fits mid mounts with S&S brake pedal kit (560-0259A)
- Saddlebag support compatible! Works with OEM and similar size saddlebags *(like Heritage® or Sport Glide® models)*
- Full heat shields on both front and rear headers
- Stainless steel stepped header construction
- S&S engineered high performance catalyst brings legal performance to the street! *(Street Legal version)*
- 50 State legal for 2018–2020 Softail models! CARB EO# K-010-13
- Computer aided design and precision bending for class-leading ground clearance
- New multi-faceted machined endcap design
- Available in show quality chrome or ceramic black finish
- Oxygen sensor ports allow use of wide band or stock O2 sensors
- Passenger peg bracket included *(Fat Boy, FXDR and Breakout version. All others use OE Heritage location)*
- SAE J2825 sound level compliant
- Removable dB reducer included *(Race only version)*
- Made in the USA!

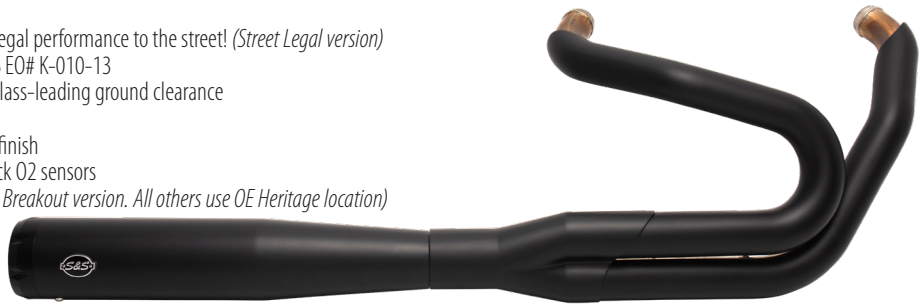

CARB compliant
CARB EO K-010-13

SUPERSTREET 2:1 EXHAUST SYSTEM — STREET LEGAL*

Fitment	Finish	Part #
2018–'20 HD® Street Bob®, Low Rider®, Softail Slim®, Fat Bob®, Deluxe, Sport Glide® & Heritage® models®	Black with Black Endcap	**550-0789B**
	Chrome with Black Endcap	**550-0791B**
2018–'20 HD® Softail® Fat Boy®, Breakout® & FXDR® models	Black with Black Endcap	**550-0846B**
	Chrome with Black Endcap	**550-0847B**

SUPERSTREET 2:1 EXHAUST SYSTEM — RACE ONLY†

2018–2020 HD Street Bob, Low Rider, Softail Slim, Fat Bob, Deluxe, Sport Glide & Heritage models	Black with Black Endcap	**550-0788**
	Chrome with Black Endcap	**550-0790**
2018–2020 HD Softail Fat Boy, Breakout & FXDR models	Black with Black Endcap	**550-0857**
	Chrome with Black Endcap	**550-0858**

*Exempt from emissions tampering regulations under CARB EO# K-010-13 for all 2018-2020 Softail models

†DISCLAIMER: FOR CLOSED COURSE COMPETITION USE ONLY. NOT INTENDED FOR STREET USE. LEGAL IN CALIFORNIA ONLY FOR RACING VEHICLES WHICH MAY NEVER BE USED, OR REGISTERED OR LICENSED FOR USE, UPON A HIGHWAY. NOT LEGAL FOR SALE OR USE NATIONWIDE ON ANY FEDERAL POLLUTION CONTROLLED MOTOR VEHICLE UNDER THE CLEAN AIR ACT.

⚠ WARNING: Cancer and Reproductive Harm – www.P65Warnings.ca.gov



REPLACEMENT PARTS: SEE PAGE 38

GRAND NATIONAL® 2:2 EXHAUST SYSTEM
FOR 2018–2020 HD® STREET BOB®, LOW RIDER®, SLIM®, FAT BOB®, & DELUXE MODELS

FEATURES AND BENEFITS

- 2:2 Free-flow design equals solid HP gains
- Fits floorboard and forward controls and fits mid mounts with S&S brake pedal kit *(part #560-0259A for **$154.95**)*
- Hidden crossover provides performance benefits of 2:1
- Full heat shields on both front and rear headers
- Stainless steel header construction
- High flow catalytic converters maintain the performance of a straight through system
- Race inspired Grand National® endcap
- Available in chrome or ceramic black finish
- Oxygen sensor ports allow use of wide band or stock O2 sensors.
- SAE J2825 sound level compliant
- Removable dB reducer included *(Race only version)*
- Right side passenger peg relocation bracket *(part #550-0801 for **$69.95**)*
- Made in USA!

CARB compliant
CARB EO K-010-4

CARB compliant
CARB EO K-010-7



Passenger Peg Relocation Bracket



NOTE:
Mid mounts require brake pedal kit (part # 560-0259A / msrp *$154.95*)

GRAND NATIONAL® 2:2 EXHAUST SYSTEM FOR 2018–'19 HD® STREET BOB®, LOW RIDER, SLIM, FAT BOB, & DELUXE MODELS — STREET LEGAL†	
Finish	Part #
Chrome	**550-0816A**
Black	**550-0815A**

GRAND NATIONAL 2:2 EXHAUST SYSTEM FOR 2018–2020 HD STREET BOB, LOW RIDER, SLIM, FAT BOB, & DELUXE MODELS — RACE ONLY††	
Chrome	**550-0761**
Black	**550-0760**

†Exempt from emissions tampering regulations under CARB EO# K-010-7 for all 2018-2019 Softail Models

††DISCLAIMER: NOT LEGAL FOR SALE OR USE IN CALIFORNIA ON ANY POLLUTION CONTROLLED MOTOR VEHICLE. NOT LEGAL FOR SALE OR USE NATIONWIDE ON ANY FEDERAL POLLUTION CONTROLLED MOTOR VEHICLE UNDER THE CLEAN AIR ACT

⚠WARNING: Cancer and Reproductive Harm – www.P65Warnings.ca.gov

Grand National



REPLACEMENT PARTS: SEE PAGE 45

GRAND NATIONAL® SLIP-ON MUFFLERS
FOR 2018–2020 HD® FAT BOB® MODELS

FITMENT
- 2018–2020 Harley-Davidson® Fat Bob® Models

FEATURES AND BENEFITS
- Up to 12% more horsepower and 6% more torque *(when used with Stealth Air Cleaner Kit)*
- Race inspired design
- Ceramic black finish
- Deep performance rumble replaces stock whisper tone
- No mapping required
- SAE J2825 sound level compliant
- Removable dB reducer
- Made in USA!



Removable dB reducer

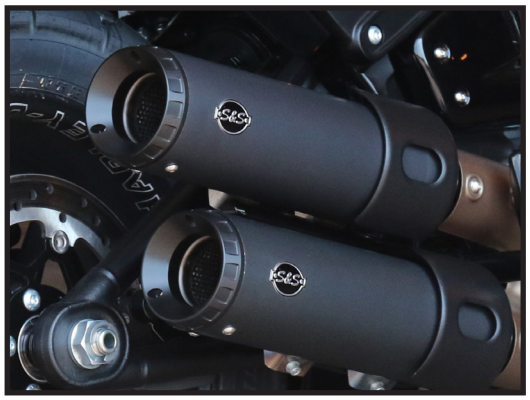

GRAND NATIONAL® SLIP-ON MUFFLERS FOR 2018–2020 HD® FAT BOB® MODELS

Description	Part #
Black	**550-0734**

*Qualified manufacturer declared U.S. 50-State legal emissions replacement part on all MY 2018-2020 Fat Bob models.

⚠WARNING: Cancer and Reproductive Harm – www.P65Warnings.ca.gov



REPLACEMENT PARTS: SEE PAGE 40

GRAND NATIONAL® SLIP-ON MUFFLERS
FOR 2018–2020 HD® SOFTAIL® MODELS (EXCEPT FAT BOB®, SPORT GLIDE®, & FXDR MODELS)

FITMENT
- Fits 2018–2020 HD® Softail® Street Bob®, Low Rider®, Slim®, Fat Boy®, Breakout®, Heritage Classic & Deluxe® models

FEATURES AND BENEFITS
- Race inspired Grand National endcap design
- Show chrome or ceramic black finish
- All hardware and gaskets included
- Deep performance rumble replaces stock whisper tone
- SAE J2825 sound level compliant
- Removable dB reducer included *(Race only version)*
- Made in USA!

CARB compliant
CARB EO K-010-6

GRAND NATIONAL® MUFFLERS FOR 2018–'19 M8 HD® SOFTAIL® MODELS — STREET LEGAL†

Fitment	Muffler Body Finish	Part #
M8 HD Softail models: Street Bob®, Low Rider®, Slim®, Fat Boy® & Breakout® models	Black	**550-0754A**
M8 HD Softail models: Street Bob, Low Rider, Slim, Fat Boy & Breakout models	Chrome	**550-0755A**
M8 HD Heritage Softail Classic & Softail Deluxe models	Chrome	**550-0757A**

GRAND NATIONAL MUFFLERS FOR 2018–2020 M8 HD® SOFTAIL® MODELS — RACE ONLY††

M8 HD Softail models: Street Bob®, Low Rider®, Slim®, Fat Boy® & Breakout® models	Black	**550-0737**
M8 HD Softail models: Street Bob, Low Rider, Slim, Fat Boy & Breakout models	Chrome	**550-0738**
M8 HD Heritage Softail Classic & Softail Deluxe models	Chrome	**550-0740**

†Exempt from emissions tampering regulations under CARB EO# K-010-6 for all 2018-2019 Breakout, Fat Boy, Low Rider, Slim, Street Bob, Deluxe, and Heritage Classic Softail Models

††DISCLAIMER: NOT LEGAL FOR SALE OR USE IN CALIFORNIA ON ANY POLLUTION CONTROLLED MOTOR VEHICLE. NOT LEGAL FOR SALE OR USE NATIONWIDE ON ANY FEDERAL POLLUTION CONTROLLED MOTOR VEHICLE UNDER THE CLEAN AIR ACT

⚠ WARNING: Cancer and Reproductive Harm – www.P65Warnings.ca.gov



REPLACEMENT PARTS: SEE PAGE 41

SLASH CUT SLIP-ON MUFFLERS
FOR 2018–2020 HD® SOFTAIL® MODELS (EXCEPT FAT BOB®, SPORT GLIDE®, & FXDR MODELS)

FITMENT
- Fits 2018–2020 HD® Softail® Street Bob®, Low Rider®, Slim®, Fat Boy®, Breakout®, Heritage® & Classic® models

FEATURES AND BENEFITS
- Classic Slash Cut styling
- Show chrome or ceramic black finish
- All hardware and gaskets included
- Deep performance rumble replaces stock whisper tone
- SAE J2825 sound level compliant
- Removable dB reducer included *(Race only version)*
- Made in USA!



CARB compliant
CARB EO K-010-6

SLASH CUT MUFFLERS FOR 2018–'19 HD® SOFTAIL® MODELS — STREET LEGAL†

Fitment	Muffler Body Finish	Part #
M8 HD Softail models: Street Bob®, Low Rider®, Slim®, Fat Boy® & Breakout® models	Black	**550-0752A**
M8 HD Softail models: Street Bob, Low Rider, Slim, Fat Boy & Breakout models	Chrome	**550-0753A**
M8 HD Heritage Softail Classic & Softail Deluxe models	Chrome	**550-0756A**

SLASH CUT MUFFLERS FOR 2018–2020 M8 SOFTAIL® MODELS — RACE ONLY††

M8 HD Softail models: Street Bob®, Low Rider®, Slim®, Fat Boy® & Breakout® models	Black	**550-0735**
M8 HD Softail models: Street Bob, Low Rider, Slim, Fat Boy & Breakout models	Chrome	**550-0736**
M8 HD Heritage Softail Classic & Softail Deluxe models	Chrome	**550-0739**

†Exempt from emissions tampering regulations under CARB EO# K-010-6 for all 2018-2019 Breakout, Fat Boy, Low Rider, Slim, Street Bob, Deluxe, and Heritage Classic Softail Models
††DISCLAIMER: NOT LEGAL FOR SALE OR USE IN CALIFORNIA ON ANY POLLUTION CONTROLLED MOTOR VEHICLE. Not legal for sale or use on any EPA pollution controlled motor vehicle.
⚠WARNING: Cancer and Reproductive Harm – www.P65Warnings.ca.gov



REPLACEMENT PARTS: SEE PAGE 41

EC SLIP-ON MUFFLERS
FOR 2018–2020 HD SOFTAIL MODELS (FOR EUROPE)

FEATURES & BENEFITS
- EC approved with S&S performance and style
- Race-inspired Grand National® endcap design or the classic slash cut design complements any bike style
- Show chrome or ceramic black finish
- 82mm can with perforated stainless steel baffle and Race TEX cartridge packing
- All hardware and gaskets included
- Made in USA



GRAND NATIONAL® EC SLIP-ON MUFFLERS FOR 2018 M8 HD® SOFTAIL® MODELS

M8 Softail® Street Bob®, Low Rider®, Slim®, Fat Boy® & Breakout® models	Black	**550-0824**
M8 Softail® Street Bob, Low Rider, Slim®, Fat Boy & Breakout models	Chrome	**550-0825**
M8 Softail® Heritage Classic & Deluxe® models	Chrome	**550-0826**

EU Type-Approval: e9*134/2014*2018/295H*11028*00

SLASH CUT EC SLIP-ON MUFFLERS FOR 2018 M8 HD® SOFTAIL® MODELS

M8 Softail® Street Bob®, Low Rider®, Slim®, Fat Boy® & Breakout® models	Black	**550-0821**
M8 Softail® Street Bob, Low Rider, Slim, Fat Boy & Breakout models	Chrome	**550-0822**
M8 Softail® Heritage®/Deluxe® models	Chrome	**550-0823**

EU Type-Approval: e9*134/2014*2018/295H*11027*00



REPLACEMENT PARTS: SEE PAGE 48

NEW FOR 2020 FROM S&S CYCLE

EC GRAND NATIONAL® SLIP-ON MUFFLERS
FOR 2018–2020 M8 HD® FAT BOB® SOFTAIL® MODELS (FOR EUROPE)

FEATURES AND BENEFITS
- EC approved with S&S performance & style
- Race-inspired Grand National® endcap design
- High temperature ceramic black finish
- 100mm can with perforated stainless steel baffle & Race TEX cartridge packing
- dB reducer included
- All hardware and gaskets included



EC Type Approved

GRAND NATIONAL® EC 100MM SLIP-ON FOR 2018–2020 HD® SOFTAIL® FAT BOB® MODELS

Description	Part #
Black	**550-0827**

EU Type-Approval: e9*134/2014*2018/295G*11029*00

NEW FOR 2020 FROM S&S CYCLE

EC Mk45 SLIP-ON MUFFLERS
FOR 2017–2020 M8 MODELS (FOR EUROPE)

FEATURES AND BENEFITS
- EC approved with S&S performance and style
- Bold 4.5" design — with stainless steel baffle and Race TEX cartridge packing
- Choose from S&S Thruster or Tracer endcap designs in chrome or black
- Performance 2.5" stainless steel perforated baffle
- Made in USA!

EC Type Approved



Mk45 EC 4.5" SLIP-ON MUFFLERS FOR 2017–2020 TOURING MODELS

Muffler Body Finish	Endcap Finish & Style	Part #
Chrome	Chrome Thruster	**550-0861**
	Black Highlight Machined Thruster	**550-0860**
	Chrome Tracer	**550-0864**
	Black Highlight Machined Tracer	**550-0863**
Black	Black Highlight Machined Thruster	**550-0862**
	Black Highlight Machined Tracer	**550-0865**

EU Compliant per 11032 G

EC-Type Approval for non-original motorcycle noise abatement device

REPLACEMENT PARTS: SEE PAGE 39

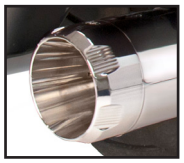

Chrome with Chrome Thruster

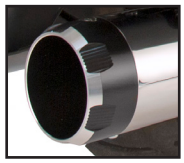

Chrome with Machined Thruster

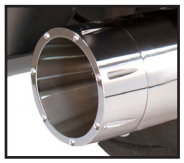

Chrome with Chrome Tracer



Chrome with Machined Tracer



Black with Machined Thruster

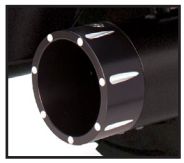

Black with Machined Tracer

NEW FOR 2020 FROM S&S CYCLE

STEALTH TRIBUTE AIR CLEANER KITS

CLASSIC DESIGN — STEALTH FITMENT

Conceived by S&S founder, George J. Smith, and brought to market by his son George B. Smith, the Classic Two Throat carb and matched air cleaner served as a performance milestone in the v-twin space for over a decade. Inspired by the unique style of our Two Throat intake, S&S has created the new "Tribute" air cleaner cover and wrapped it around our proven Stealth filter system creating a classic look combined with modern performance.

STEALTH TRIBUTE AIR CLEANER KITS		
2017–'19 M8 Touring & 2018–'19 Softail® Models*	Chrome±	**170-0595**
	Gloss Black	**170-0598**

KIT INCLUDES STEALTH AIR CLEANER 170-0354B WHICH IS EXEMPT FROM EMISSIONS TAMPERING REGULATIONS UNDER CARB EO# D-355-27

±⚠WARNING: Cancer and Reproductive Harm – www.P65Warnings.ca.gov

CARB compliant
EO #D-355-27

COVERS *ONLY*	
Chrome	**170-0592**
Gloss Black	**170-0593**





STEALTH AIR CLEANER KITS

NEW STEALTH TRIBUTE COVERS SEE PAGE 22



FITMENT

- 2017–2020 Harley-Davidson® models with Milwaukee-Eight® engine
- Works with Screamin' Eagle® 64mm throttle body

FEATURES AND BENEFITS

- Use with any S&S Stealth cover (see pagepage 24)
- Use with your stock Harley-Davidson Milwaukee-Eight engine air cleaner cover (Adapter required — see below)
- High flow (1" taller) filter kit available (P/N 170-0127)
- Backplate made from high-strength advanced synthetic polymer—reduces heat transfer to intake air
- Cooler, denser air allows for more efficient cylinder fill and better performance
- Included actuator cover—hides TBW servo motor for a clean, attractive installation
- Exempt from emissions tampering regulations under CARB EO# D-355-27 for all fuel injected models

STEALTH AIR CLEANER KITS

Description	Part #
Carbon Fiber Teardrop plus Stealth Kit *(170-0354B)*	**170-0498A**
Chrome Teardrop plus Stealth Kit *(170-0354B)*	**170-0524A±**
Gloss Black Teardrop plus Stealth Kit *(170-0354B)*	**170-0525A**
Chrome Mini Cover plus Stealth Kit *(170-0354B)*	**170-0435B±**
Gloss Black Mini Cover plus Stealth Kit *(170-0354B)*	**170-0436B**
Chrome Airstream cover plus Stealth Kit *(170-0354B)*	**170-0390B±**
Gloss Black Airstream cover plus Stealth Kit *(170-0354B)*	**170-0397B**
Tri-Spoke cover plus Stealth Kit *(170-0354B)*	**170-0392B**
Torker cover plus Stealth Kit *(170-0354B)*	**170-0393B**
Air 1 cover plus Stealth Kit *(170-0354B)*	**170-0394B**

KIT ONLY — NO COVER

Stealth Air Cleaner Kit for Stock M8 and 64mm throttle body	**170-0354B**
Adapter for Stock M8 Air Cleaner Cover	**170-0352**

Exempt from emissions tampering regulations under CARB EO# D-355-27 for all fuel injected models

± ⚠ WARNING: Cancer and Reproductive Harm – www.P65Warnings.ca.gov

CARB compliant
EO #D-355-27

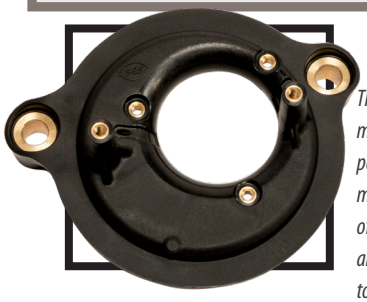



The S&S Stealth air cleaner backplate in this kit is made from the same high-strength advanced synthetic polymers used in high performance automotive intake manifolds and high-end handgun bodies! This material offers superior mechanical properties, thermal stability, and chemical resistance. Designed to reduce heat transfer to the intake air for more efficient induction.

EC STEALTH AIR CLEANER KITS (FOR EUROPE)

- 2018–'19 M8 Softail® models *(e9 11026G)*
- 2017–'19 M8 touring models

EC STEALTH AC KITS

2018–'19 M8 Softail® models *cover sold separately*	**170-0521**
2017–'19 M8 touring models *cover sold separately*	**170-0521**

EU Type-Approval: e9*134/2014*2018/295G*11026

e9 S&S 11026 G

EC Type Approved

REPLACEMENT PARTS: SEE PAGE 37

STEALTH AIR CLEANER COVERS (ONLY)

NEW STEALTH TRIBUTE COVERS SEE PAGE 22


Teardrop

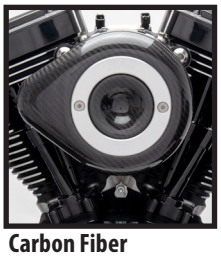
Carbon Fiber


Mini in Gloss Black


Tri-Spoke


Torker

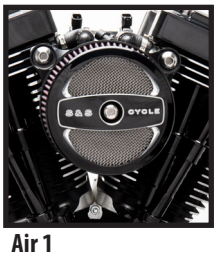
Air 1


Airstream in Chrome


Airstream in Gloss Black


Muscle in Chrome


Muscle in Gloss Black

STEALTH COVERS

Teardrop		Teardrop—Slasher		Carbon Fiber	Mini		Tri-Spoke	Torker	Air 1
Chrome	Gloss Black	Chrome	Gloss Black	Black	Chrome	Gloss Black	Gloss Black w/Highlights	Gloss Black w/Highlights	Gloss Black w/Highlights
170-0530	**170-0531**	**170-0532**	**170-0533**	**170-0501**	**170-0367**	**170-0366**	**170-0210**	**170-0206**	**170-0214**

Airstream		Muscle		Displacement		
Chrome	Gloss Black	Chrome	Gloss Black with Highlighted Logo	111	124	143
170-0118	**170-0396**	**170-0121**	**170-0463**	**170-0319**	**170-0321**	**170-0323**

⚠WARNING: Cancer and Reproductive Harm – www.P65Warnings.ca.gov

HIGH FLOW AIR FILTER KITS

FITMENT

- S&S Stealth Air Cleaners

FEATURES AND BENEFITS

- Low restriction filter element comes pre-oiled for true plug and play installation
- 1" wider filtration area provides up to 37% more airflow over standard S&S filters
- Resulting band of exposed filter material imparts a high performance look

KIT CONTENTS

- Wide filter
- Filter spacers

HIGH FLOW AIR FILTERS

Description	Fitment	Part #
High Flow Air Filter Kit *(includes spacers)*	Stealth, 1" Taller	**170-0127***
1" Taller Filter Only	Stealth	**170-0154**
Spacer	Classic Teardrop & Stealth, 1" Taller	**50-5009-S**

*DISCLAIMER: NOT LEGAL FOR SALE OR USE IN CALIFORNIA ON ANY POLLUTION CONTROLLED MOTOR VEHICLE. NOT LEGAL FOR SALE OR USE NATIONWIDE ON ANY FEDERAL POLLUTION CONTROLLED MOTOR VEHICLE UNDER THE CLEAN AIR ACT

STANDARD REPLACEMENT FILTERS

STANDARD REPLACEMENT AIR FILTERS

Fitment	Part #
Stealth	**170-0126**


170-0197

PRE-FILTERS

FITMENT

- S&S® Stealth Air Filters

FEATURES AND BENEFITS

- Water resistant
- Prevents large debris from prematurely clogging filter
- Washable Nylon
- Promotes longer filter life
- Reduces the risk of water entering air intake system

PRE-FILTERS

Application	Part #
Standard	**170-0193**
1" Tall	**170-0197**

124" & 128" BIG BORE KITS

FITMENT:

- 2017–2020 touring models
- 2018–2020 Softail® models

FEATURES AND BENEFITS:

- 107" to 124" Big Bore Kit
- 114" to 128" Big Bore Kit
- 114" & 117" CVO™ to 128" Big Bore Kit
- 4.250" bore
- Forged pistons
- 11.1 compression ratio
- Wrinkle black or black granite finish
- Available with or without highlighted fins
- Bolt-on kit — *No machining required*
- Includes head, base, & exhaust gaskets and hardware

SPECS FOR 124" & 128" BIG BORE KITS

Displacement	Bore	Stroke	Piston Type	Compression Ratio
124"	4.250	4.375	Forged	11.1
128"	4.250	4.5	Forged	11.1

124" & 128" BIG BORE KITS FOR 2017–2020 TOURING MODELS & 2018–2020 SOFTAIL® MODELS

Displacement	Finish	Part #
124"	Wrinkle Black with Non-Highlighted Fins	**910-0681**
	Wrinkle Black with Highlighted Fins	**910-0625**
128"	Wrinkle Black with Non-Highlighted Fins	**910-0685**
	Wrinkle Black with Highlighted Fins	**910-0684**
	Black Granite with Highlighted Fins	**910-0733**

DISCLAIMER: FOR CLOSED COURSE COMPETITION USE ONLY. NOT INTENDED FOR STREET USE. LEGAL IN CALIFORNIA ONLY FOR RACING VEHICLES WHICH MAY NEVER BE USED, OR REGISTERED OR LICENSED FOR USE, UPON A HIGHWAY. NOT LEGAL FOR SALE OR USE NATIONWIDE ON ANY FEDERAL POLLUTION CONTROLLED MOTOR VEHICLE UNDER THE CLEAN AIR ACT.



BIG BORE CYLINDERS

FITMENT:
- 2017–2020 touring models
- 2018–2020 Softail® models

FEATURES AND BENEFITS:
- 4.250" Bore
- Wrinkle black or black granite finish
- Available with or without highlighted fins

CYLINDER SETS

Finish	Part #
Wrinkle Black with Non-Highlighted Fins	**910-0683**
Wrinkle Black with Highlighted Fins	**910-0682**
Black Granite with Highlighted Fins	**910-0739**

DISCLAIMER: FOR CLOSED COURSE COMPETITION USE ONLY. NOT INTENDED FOR STREET USE. LEGAL IN CALIFORNIA ONLY FOR RACING VEHICLES WHICH MAY NEVER BE USED, OR REGISTERED OR LICENSED FOR USE, UPON A HIGHWAY. NOT LEGAL FOR SALE OR USE NATIONWIDE ON ANY FEDERAL POLLUTION CONTROLLED MOTOR VEHICLE UNDER THE CLEAN AIR ACT.

BIG BORE PISTON KITS

- Piston kits include set of pistons, rings, wristpins, and clips



4.250" BORE PISTON KIT FOR M8 MODELS

Displacement	Deck Height	Stroke	Standard	+.010
124" Flat Top	1.143"	4.375"	**920-0135**	**920-0141**
128" 7.2cc Dished	1.0805"	4.500"	**920-0140**	**920-0142**

DISCLAIMER: FOR CLOSED COURSE COMPETITION USE ONLY. NOT INTENDED FOR STREET USE. LEGAL IN CALIFORNIA ONLY FOR RACING VEHICLES WHICH MAY NEVER BE USED, OR REGISTERED OR LICENSED FOR USE, UPON A HIGHWAY. NOT LEGAL FOR SALE OR USE NATIONWIDE ON ANY FEDERAL POLLUTION CONTROLLED MOTOR VEHICLE UNDER THE CLEAN AIR ACT.

REPLACEMENT PARTS FOR PISTONS

Piston Ring Set	*2 Pack*	**940-0060**
Piston +.010" Ring Set	*2 Pack*	**940-0062**
Wristpin Keeper		**94-9278-S**
Wristpin, .927" x 2.500"		**940-0037**

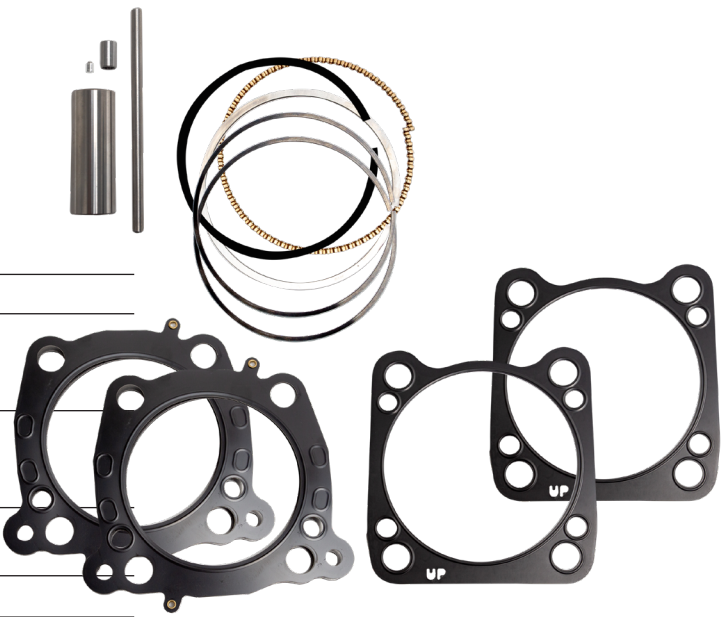

GASKET KIT

Description	Thickness	Qty	Part #
Head gasket, 4.250" Bore, Stock bolt pattern	.030"	*2 Pack*	**930-0140**
Base gasket, Stock to 4.250" Bore, Stock bolt pattern	.014"	*2 Pack*	**930-0139**
Gasket Kit, includes Head, Base, & Exhaust, 4.25" Bore			**900-0955**
Plug			**500-0835**
Cylinder Dowel Pin		*4 Pack*	**500-0849**
HARDWARE KIT			**910-0677**

NEW FOR 2020 3 PIECE FLYWHEEL ASSEMBLIES

The crankshaft is the heart of any performance engine and S&S Cycle has been perfecting the art for over six decades. Stronger, more durable, and trued to a spec others can only dream of, our new crankshaft assemblies for the Milwaukee-Eight® platform are the best of the best to build your high performance engine around.

FEATURES AND BENEFITS:

- Available in 4⅜", 4½" & 4⅝" Stroke
- Available with or without Balancer Gear
- Heat Treated 4140 Material is harder & more than twice as strong as stock
- Stronger assembly eliminates need to weld crankpin
- S&S High Strength Connecting Rods are designed with Finite Element Analysis to eliminate weak spots and handle more power!
- Available with either full width or tapered wristpin connecting rods
- Perfect for Gear Drive Cams
- Consistent balance & precision machining
- Capable of higher RPM – *More available power!*





Tapered connecting rods



Full Width connecting rods

REPLACEMENT PARTS: SEE PAGE 52

FLYWHEEL ASSEMBLIES FOR 2017-2020 M8 MODELS

Displacement	Stroke	Compression Ratio	Balanced to Total Piston Weight (gms)	Rod Wristpin End Style	Balancer Gear	Part #
107" *(with stock pistons)*	4 ⅜"	9.9	1060	Tapered	Yes	**320-0601**
					No	**320-0616**
124" *(with S&S® cylinders & pistons)*	4 ⅜"	10.8	1060	Tapered	Yes	**320-0601**
					No	**320-0616**
124" *(with S&S cylinders & pistons)*	4 ⅜"	10.8	1213	Full	Yes	**320-0604**
					No	**320-0619**
114" *(with stock pistons)*	4 ½"	10.3	1060	Tapered	Yes	**320-0598**
					No	**320-0615**
128" *(with S&S cylinders & pistons)*	4 ½"	10.8	1060	Tapered	Yes	**320-0598**
					No	**320-0615**
128" *(with S&S cylinders & pistons)*	4 ½"	10.8	1213	Full	Yes	**320-0603**
					No	**320-0618**
117" *(with stock 114" pistons)*	4 ⅝"	10.6	1060	Tapered	Yes	**320-0602**
					No	**320-0617**
131" *(with S&S cylinders & pistons)*	4 ⅝"	10.8	1060	Tapered	Yes	**320-0602**
					No	**320-0617**
131" *(with S&S cylinders & pistons)*	4 ⅝"	10.8	1213	Full	Yes	**320-0605**
					No	**320-0620**

124" POWER PACKS

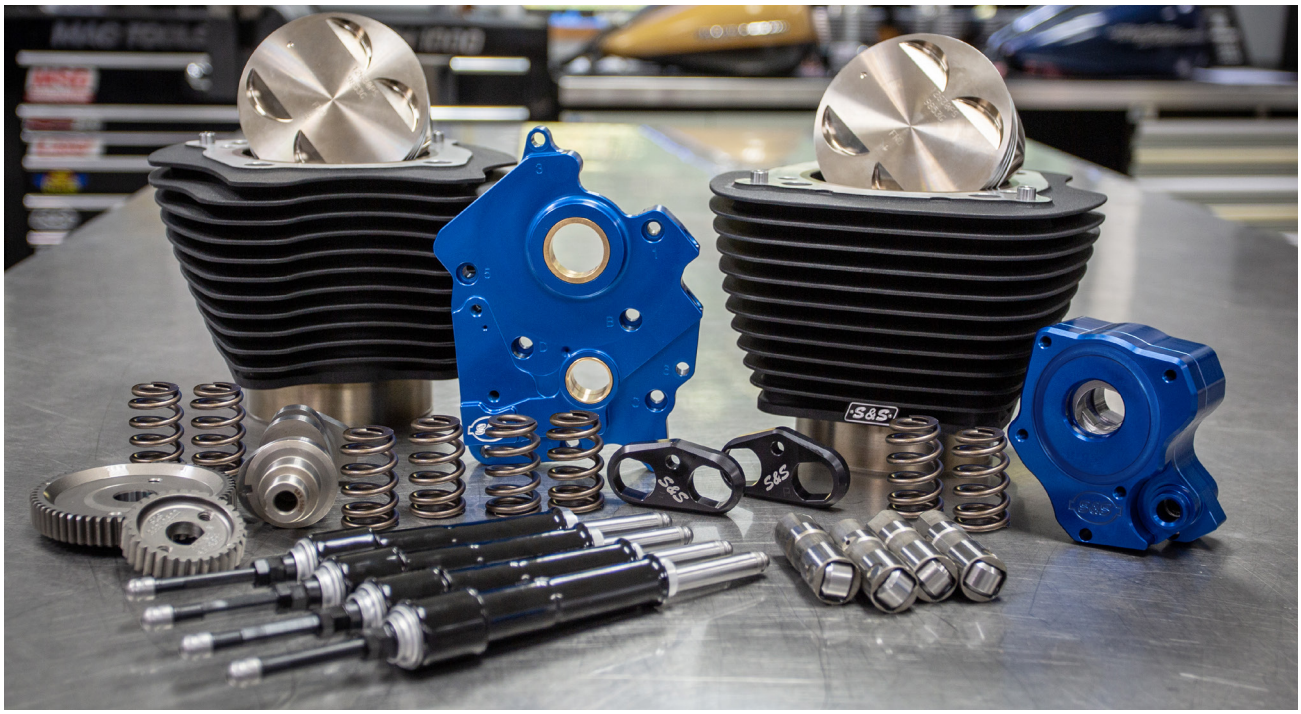

107" TO 124" BIG BORE KIT:
- Available with or without fin highlighting
- Bolt-on kit — No case machining required
- 4.250" bore
- Forged pistons
- 11.1 Compression ratio

OIL PUMP/CAM PLATE:
- Precision machined from billet aluminum
- Passage plugs removable for servicing
- Independent scavenge sections for flywheel cavity and cam chest
- Debris screens in both scavenge pickups
- Magnet in cam chest to help to stop debris from entering oil pump
- 44% flow increase on supply side & 58% flow increase on scavenge side
- Pressure relief valve is adjustable with unit installed in engine
- Kits now include updated oil pump with groove for optional OEM oil seal

PUSHRODS:
- Quickee pushrods
- Chrome or gloss black pushrod tubes available

TAPPETS:
- S&S Precision Tappets

TAPPET CUFFS:
- Hard anodized black coating
- Billet aluminum construction
- Stronger than stock material eliminates distortion
- Improve tappet stability in high lift & high rpm situations

CAM:
- S&S 550 cam—Designed for big bore applications
- Available in both gear drive & chain drive variations
- Gear drive kits provide improved cam timing accuracy & eliminate stock chain tensioner
- Gear drive kits include outer drive gears

VALVE SPRINGS:
- Works well with cams up to .605 lift
- High performance conical single wire spring
- Includes top collars, keepers, & valve seals/bottom collars

124" POWER PACKAGE KIT FOR 2017 TOURING MODELS & ALL 2018–2020 HD® MODELS WITH 107" ENGINE

Cooling System	Finish	Drive	Pushrod Tubes	Part #
Oil	Wrinkle Black with Highlighted Fins	Chain	Chrome	**310-1052A**
Oil	Wrinkle Black with Highlighted Fins	Gear	Chrome	**310-1053A**
Oil	Wrinkle Black with Highlighted Fins	Chain	Black	**310-1056A**
Oil	Wrinkle Black with Highlighted Fins	Gear	Black	**310-1058A**
Oil	Wrinkle Black with Non-Highlighted Fins	Chain	Black	**310-1057A**
Oil	Wrinkle Black with Non-Highlighted Fins	Gear	Black	**310-1059A**
Water	Wrinkle Black with Highlighted Fins	Chain	Chrome	**310-1050A**
Water	Wrinkle Black with Highlighted Fins	Gear	Chrome	**310-1051A**
Water	Wrinkle Black with Highlighted Fins	Chain	Black	**310-1054A**
Water	Wrinkle Black with Highlighted Fins	Gear	Black	**310-1055A**

DISCLAIMER: NOT LEGAL FOR SALE OR USE IN CALIFORNIA ON ANY POLLUTION CONTROLLED MOTOR VEHICLE. NOT LEGAL FOR SALE OR USE NATIONWIDE ON ANY FEDERAL POLLUTION CONTROLLED MOTOR VEHICLE UNDER THE CLEAN AIR ACT

NEW FOR 2020 FROM S&S CYCLE

128" POWER PACKS FOR 2017–2020 M8 MODELS W/4.500" STROKE

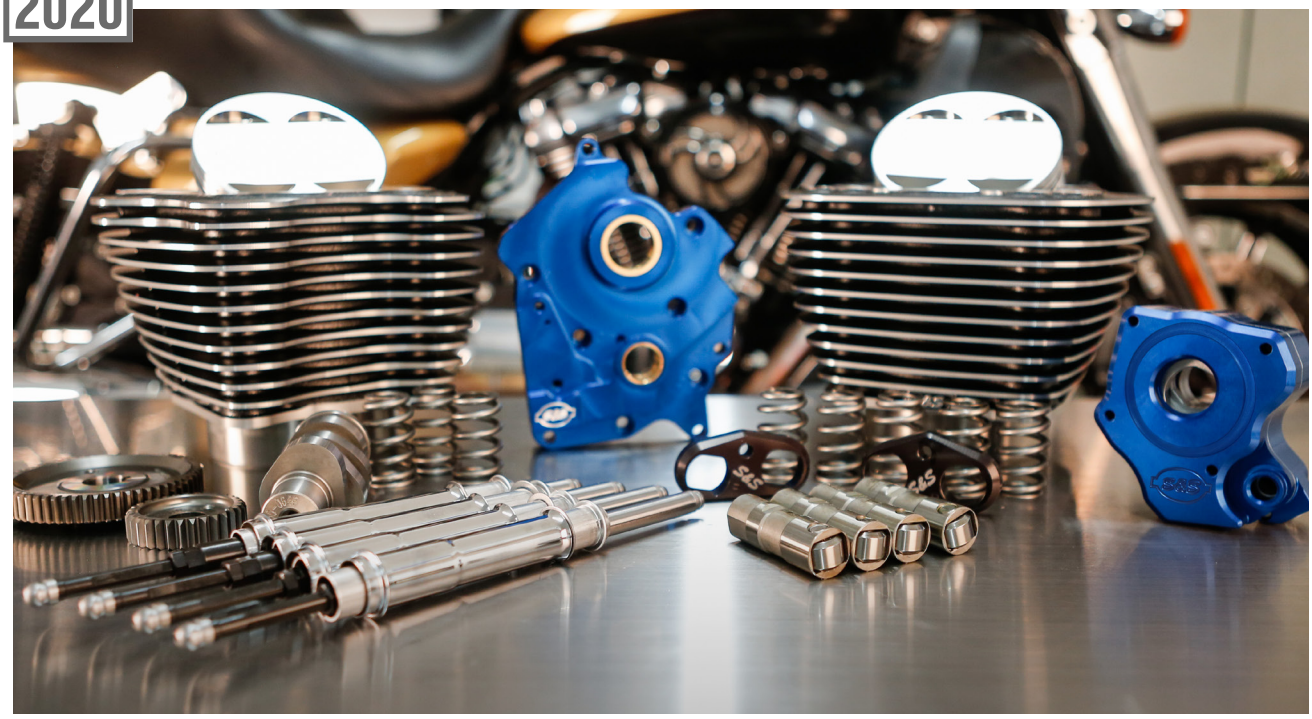

114" TO 128" BIG BORE KIT & 114" & 117" CVO TO 128" BIG BORE KIT:

- Wrinkle black or black granite finish
- Available with or without fin highlighting for wrinkle black
- Bolt-on kit — No case machining required
- 4.250" Bore
- Forged pistons
- 11.1:1 Compression ratio

OIL PUMP/CAM PLATE:

- Precision machined from billet aluminum
- Passage plugs removable for servicing
- Independent scavenge sections for flywheel cavity & cam chest
- Debris screens in both scavenge pickups
- Magnet in cam chest to help to stop debris from entering oil pump
- Increased flow capacity on both feed & scavenge side
- Pressure relief valve is adjustable with unit installed in engine
- Kits now include updated oil pump with groove for optional OEM oil seal

PUSHRODS:

- Quickee pushrods with chrome covers

TAPPETS:

S&S Precision Tappets

TAPPET CUFFS:

- Hard anodized black coating
- Billet aluminum construction
- Stronger than stock material eliminates distortion
- Improve tappet stability in high lift & high rpm situations

CAM:

- S&S 550 cam—Designed for big bore applications
- Available in both gear drive & chain drive variations
- Gear drive kits provide improved cam timing accuracy & eliminate stock chain tensioner
- Gear drive kits include outer drive gears

VALVE SPRINGS:

- Work well with cams up to .605 Lift
- High performance conical single wire spring
- Includes top collars, keepers, & valve seals/bottom collars

128" POWER PACKAGE KIT FOR 2017–2020 M8 MODELS WITH 4.500" STROKE

Cooling System	Finish	Drive	Part #
Water	Wrinkle Black with Highlighted Fins	Chain	**310-1101A**
Water	Wrinkle Black with Highlighted Fins	Gear	**310-1102A**
Oil	Wrinkle Black with Highlighted Fins	Chain	**310-1103A**
Oil	Wrinkle Black with Highlighted Fins	Gear	**310-1104A**
Oil	Wrinkle Black with Non-Highlighted Fins	Chain	**310-1105A**
Oil	Wrinkle Black with Non-Highlighted Fins	Gear	**310-1106A**
Water	Black Granite with Highlighted Fins	Chain	**310-1107A**
Water	Black Granite with Highlighted Fins	Gear	**310-1108A**
Oil	Black Granite with Highlighted Fins	Chain	**310-1109A**
Oil	Black Granite with Highlighted Fins	Gear	**310-1110A**

DISCLAIMER: FOR CLOSED COURSE COMPETITION USE ONLY. NOT INTENDED FOR STREET USE. LEGAL IN CALIFORNIA ONLY FOR RACING VEHICLES WHICH MAY NEVER BE USED, OR REGISTERED OR LICENSED FOR USE, UPON A HIGHWAY. NOT LEGAL FOR SALE OR USE NATIONWIDE ON ANY FEDERAL POLLUTION CONTROLLED MOTOR VEHICLE UNDER THE CLEAN AIR ACT.

CAM KITS

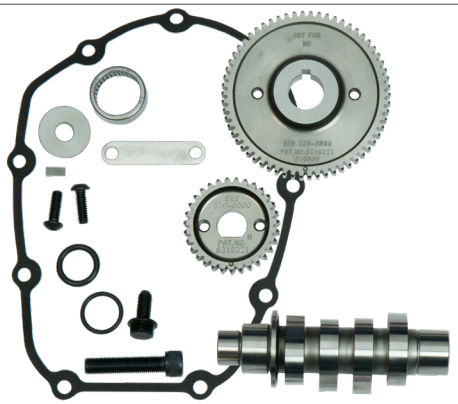

FITMENT
- 2017–2020 touring and 2018–2020 M8 models

FEATURES AND BENEFITS
- 350G gear drive cam has stock specs, but eliminates cam drive chain and tensioner
- Kits include all required bearings, o-rings and hardware
- Gear drive cams provide improved valve timing accuracy
- Made in the USA

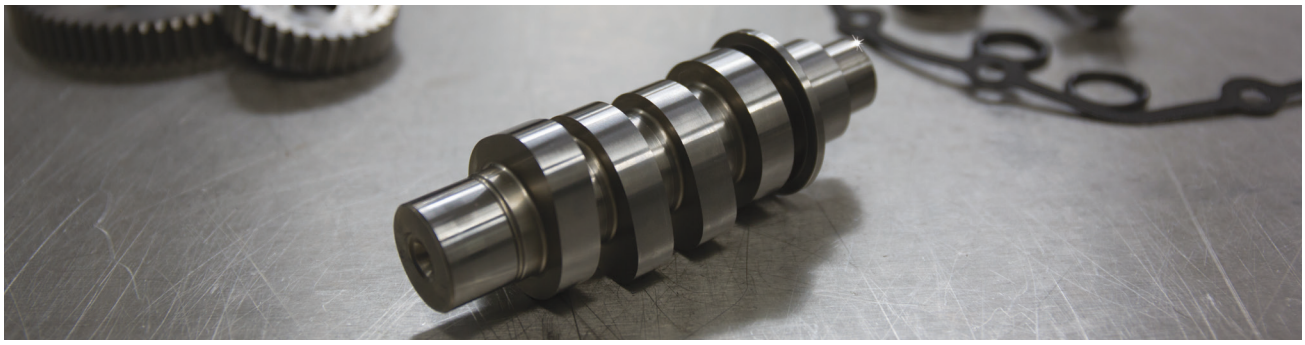

CHAIN DRIVE CAMSHAFTS FOR 2017–2020 HD® MODELS WITH M8 ENGINE

Description	Part #
465C	**330-0620**
475C	**330-0641**
550C	**330-0643**

DISCLAIMER: NOT LEGAL FOR SALE OR USE IN CALIFORNIA ON ANY POLLUTION CONTROLLED MOTOR VEHICLE. NOT LEGAL FOR SALE OR USE NATIONWIDE ON ANY FEDERAL POLLUTION CONTROLLED MOTOR VEHICLE UNDER THE CLEAN AIR ACT

GEAR DRIVE CAMSHAFTS FOR 2017–2020 HD® MODELS WITH M8 ENGINE

Description	Part #
350G - Stock	**330-0625**
465G	**330-0624**
475G	**330-0645**
550G	**330-0647**

DISCLAIMER: NOT LEGAL FOR SALE OR USE IN CALIFORNIA ON ANY POLLUTION CONTROLLED MOTOR VEHICLE. NOT LEGAL FOR SALE OR USE NATIONWIDE ON ANY FEDERAL POLLUTION CONTROLLED MOTOR VEHICLE UNDER THE CLEAN AIR ACT

REPLACEMENT PARTS

Description	Part #
Cam Cover Gasket	**310-0911**
Pinion Gear	**330-0622**
Undersized Pinion Gear	**330-0626**
Oversized Pinion Gear	**330-0627**
Cam Gear Drive	**330-0621**

CAMSHAFT INSTALLATION KITS FOR M8 2017–2020 M8 MODELS

Description	Part #
Chain Drive Installation Kit	**330-0619**
Gear Drive Installation Kit	**330-0623**

REPLACEMENT PARTS: SEE PAGE 51

S&S® CAMSHAFT SPECIFICATIONS

Cam Name	Cylinder	Valve Timing		Valve Duration		Valve Lift		Lobe Center Line		Valve Lift @ TDC	
		Intake	Exhaust	Intake	Exhaust	Intake	Exhaust	Intake	Exhaust	Intake	Exhaust
		Open BTDC/ Close ABDC	Open BBDC/ Close ATDC								
350G Stock Grind Gear Drive	Both	-7.0/1.0	33.0/-14.0	174.0	199.0	.350	.374	94.0	113.5	.057	.048
465 Performance	Front	2.6/14.6	30.1/8.8	197.2	218.9	.462	.462	96.0	100.6	.087	.109
	Rear	2.8/14.4	33.1/5.8	197.2	218.9	.462	.462	95.8	103.6	.088	.098
475 HP	Front	6.2/27.2	55.5/28.5	213.5	263.9	.475	.475	100.5	103.5	.107	.208
	Rear	2.2/31.2	52.5/20.2	213.5	252.5	.475	.475	104.5	106.0	.093	.170
550 Big Bore	Front	9.4/29.4	62.5/30.5	218.9	273.1	.550	.550	100.0	106.0	.127	.232
	Rear	3.1/31.1	59.4/38.4	214.2	277.8	.550	.550	104.0	100.5	.099	.264

CAM PLATE & OIL PUMP KITS

FITMENT
- 2017–2020 M8 models

CAM PLATE
- Precision machined from billet aluminum
- Passage plugs removable for servicing
- Bronze bushings for better lubrication & improved wear characteristics
- Made in USA

OIL PUMPS
- Kits now include updated oil pump with groove for optional OEM oil seal
- Precision machined from billet aluminum
- Independent scavenge sections for flywheel cavity and cam chest
- Debris screens in both scavenge pickups
- Magnet in cam chest to help prevent debris from entering pump
- Increased flow capacity on both feed and scavenge side
- Pressure relief valve can be adjusted with unit in engine
- Made in USA

KITS
- Buy together and save $$

CAM PLATE & OIL PUMP KITS FOR M8 MODELS

Description	Part #
Cam Plate & Oil Pump/Water-Cooled	**310-0997B**
Cam Plate & Oil Pump/Oil-Cooled	**310-0998B**
CAM PLATE ONLY	**310-0939A**

OIL PUMP ONLY

Description	Part #
Water-Cooled	**310-0947A**
Oil-Cooled	**310-0959A**

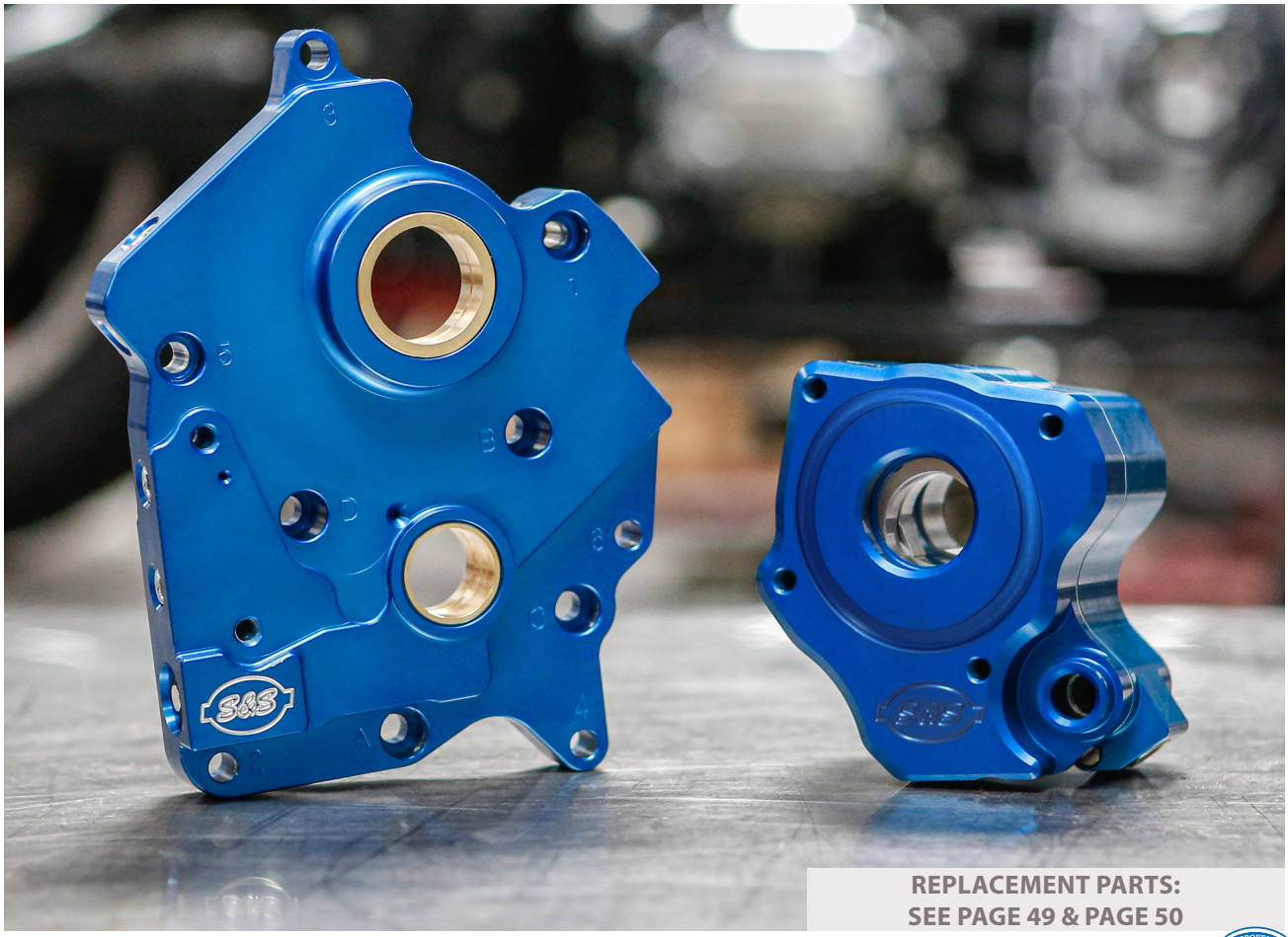

REPLACEMENT PARTS: SEE PAGE 49 & PAGE 50

CAM CHEST KITS

FITMENT
- 2017–2020 touring models
- 2018–2020 Harley-Davidson® Softail® models

OIL PUMP/CAM PLATE:
- Precision machined from billet aluminum
- Passage plugs removable for servicing
- Independent scavenge sections for flywheel cavity and cam chest
- Debris screens in both scavenge pickups
- Magnet in cam chest to help to stop debris from entering oil pump
- 44% flow increase on supply side and 58% flow increase on scavenge
- Pressure relief valve is adjustable with unit installed in engine
- Kits now include updated oil pump with groove for optional OEM oil seal

PUSHRODS:
- Quickee Pushrods
- Chrome or Gloss Black pushrod tubes available

TAPPETS:
- S&S Precision Tappets

TAPPET CUFFS:
- Hard anodized black coating
- Billet aluminum construction
- Improve tappet stability in high lift and high rpm situations

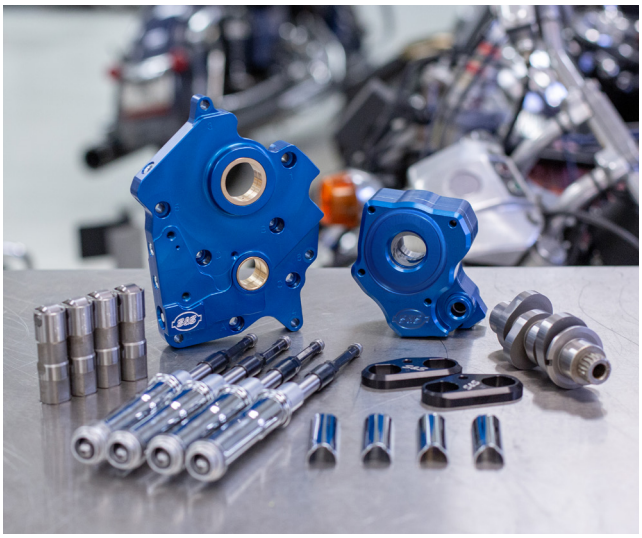

CAM:
- S&S 465, 475, or 550 cam
- 465 is a torque cam—perfect for touring applications
- 475 is a bolt-in 100hp cam!
- Available in both gear drive and chain drive variations
- Gear drive kits provide improved cam timing accuracy and eliminate the stock cam chain tensioner

INCLUDES ALL GASKETS, BEARINGS, AND HARDWARE REQUIRED FOR INSTALLATION • MADE IN USA

CAM CHEST KITS FOR 2017–2020 TOURING MODELS & 2018–2020 SOFTAIL® MODELS

Cooling system	Cam	Pushrods	Part #
Oil Cooled	Chain Drive 550C	Chrome	**310-1082A**
	Chain Drive 475C	Chrome	**310-1004A**
	Chain Drive 465C	Chrome	**310-1003A**
	Gear Drive 550G	Chrome	**310-1083A**
	Gear Drive 475G	Chrome	**310-1006A**
	Gear Drive 465G	Chrome	**310-1005A**
	Chain Drive 475C	Black	**310-1012A**
	Chain Drive 465C	Black	**310-1011A**
	Gear Drive 475G	Black	**310-1014A**
	Gear Drive 465G	Black	**310-1013A**
Water Cooled	Chain Drive 550C	Chrome	**310-1080A**
	Chain Drive 475C	Chrome	**310-1000A**
	Chain Drive 465C	Chrome	**310-0999A**
	Gear Drive 550G	Chrome	**310-1081A**
	Gear Drive 475G	Chrome	**310-1002A**
	Gear Drive 465G	Chrome	**310-1001A**
	Chain Drive 475C	Black	**310-1008A**
	Chain Drive 465C	Black	**310-1007A**
	Gear Drive 475G	Black	**310-1010A**
	Gear Drive 465G	Black	**310-1009A**

DISCLAIMER: NOT LEGAL FOR SALE OR USE IN CALIFORNIA ON ANY POLLUTION CONTROLLED MOTOR VEHICLE. NOT LEGAL FOR SALE OR USE NATIONWIDE ON ANY FEDERAL POLLUTION CONTROLLED MOTOR VEHICLE UNDER THE CLEAN AIR ACT

TAPPET CUFFS

Factory tappet guides are constructed of plastic and are at risk for allowing the tappets to twist under heavy stress. S&S Tappet Cuffs capture the tappets without impacting vertical motion and keep them perfectly aligned, even in high stress, high RPM situations



FITMENT

- 2017–2020 touring models
- 2018–2020 HD Softail® models

FEATURES AND BENEFITS

- Hard anodized black coating
- Billet aluminum construction
- Stronger material eliminates distortion
- Improve tappet stability in high lift and high rpm situations
- An easy upgrade when changing tappets or doing a cam change



TAPPET CUFFS

Fitment	Part #
2017–2020 HD® touring models 2018–2020 HD Softail® models	**330-0655**

NEW FOR 2020 FROM S&S CYCLE

PRECISION TAPPETS

High performance tappets are a cornerstone of the S&S line up and we are always looking to improve our products. After months of research and countless hours of testing we are excited to reveal the latest in performance tappets. The S&S Cycle Precision Tappets replace both our standard as well as premium tappets. Each Precision Tappet is hand assembled to exacting tolerances and designed for quiet operation and rapid pump up and all are made in the USA.

FITMENT

- 2017–2020 big twins with Milwaukee-Eight® engine

PRECISION TAPPETS

Set of 4 tappets	**330-0718**

FEATURES

- Reduced valve train noise from start up to shut down
- Close tolerances for low leak down rates
- Fast pump up and superior high rpm performance



QUICKEE ADJUSTABLE PUSHRODS

GLOSS BLACK ALSO AVAILABLE

FITMENT

- 2017–2020 big twins with Milwaukee-Eight® engine

FEATURES AND BENEFITS

- Adjustable to accommodate all tappets and cam base circle diameters and engine heights
- Easy to install — removal of rocker arms not needed
- No threads on wrench flats

KIT CONTENTS

- Pushrods, gloss black or chrome pushrod covers, o-rings, and cover keepers

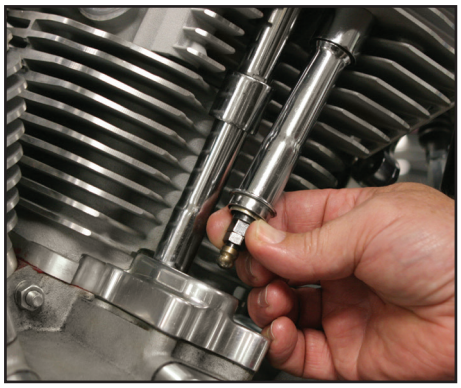



QUICKEE ADJUSTABLE PUSHRODS

Description	Part #
Gloss Black Pushrod Kit *(includes black pushrod covers, o-rings & cover keepers)*	**930-0137**
Chrome Pushrod Kit *(includes chrome pushrod covers, o-rings, & cover keepers)*	**930-0123**±
Pushrods Only	**93-5122** USA

PUSHROD REPLACEMENT PARTS FOR 2017–2020 BIG TWINS WITH THE M8 ENGINE

Description		Part #
Pushrod Cover Kit *(includes top & bottom covers, cover cap, cover spring, spring washer, & o-rings for four pushrods)*	Gloss Black	**930-0124**
	Chrome	**106-1340**
Top Cover		**93-4016**
Bottom Cover		**93-4015**
Cover Cap		**93-4017**
Cover Spring		**93-4018**
Cover Cap Washer		**50-7131**
Pushrod O-ring Kit *(includes top, middle, & bottom o-rings for four pushrods)*		**93-4022**
Top O-ring		**50-8039**
Middle O-ring		**50-8038**
Bottom O-ring		**50-8037**

PUSHROD COVER KEEPER SETS

Pushrod Cover Keeper Kit (2.200")	Gloss Black	**930-0138**
	Chrome	**930-0129**



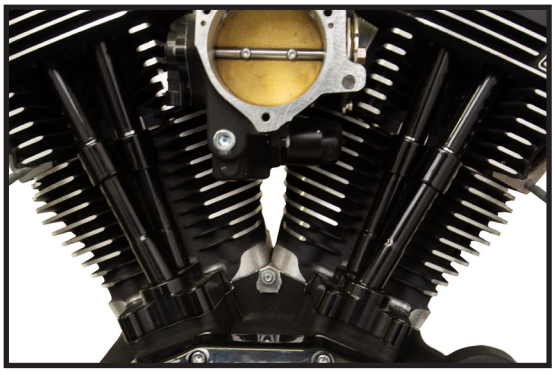

⚠WARNING: Cancer and Reproductive Harm – www.P65Warnings.ca.gov

NOTE

S&S quickee pushrods require S&S aftermarket tubes.

VALVE SPRINGS



FEATURES AND BENEFITS

- Works with cams up to .605" lift
- High performance conical single wire spring
- Kit includes: springs, top collars, keepers, valve seal/bottom collar

Lift	Installed Height	Seat Force	Force @ Max Lift
.605"	1.535"	68 lb.	264 lb.

VALVE SPRING KIT

Description	Part #
Valve Spring Kit for M8 2017–2020 Models	**900-0958**

REPLACEMENT PARTS FOR VALVE SPRING KITS

Description		Part #
Valve Keeper		**900-0956**
Top Collar		**900-0952**
Valve Stem Oil Seal, Hat Style, 6mm, M8 models	*8 pack*	**900-0959**

NEW FOR 2020 HEAD BOLTS



FEATURES AND BENEFITS

- 14% increase in strength over stock
- Heat treated 8640 steel
- 200,000 psi ultimate tensile strength
- Durable black oxide coating
- 9/16" 12 point head with integral washer
- Formed threads
- Cold formed head
- Compatible with both MLS & graphite head gaskets
- Reusable

HEAD BOLTS

Description	Part #
Sold as set of 8	**900-1006**

NEW FOR 2020 ROCKER ARM STUD KIT



FEATURES AND BENEFITS

- Extend the life of your cylinder heads
- Prevent damage to rocker arm towers
- Install studs and safely re-torque nuts
- Black oxide finish
- 12 pt nuts

ROCKER ARM STUD KIT

Rocker Arm Stud Kit for M8 2017–2020 Models	**900-1013**

GASKETS

GASKETS

Cam Cover		**310-0911**
Exhaust Gaskets	*each*	**106-5029**
	10 pack	**93-1072**
Head gasket, 4.25" Bore, .030" Stock bolt pattern	*2 pack*	**930-0140**
Base gasket, Stock to 4.250" Bore, .014" Stock bolt pattern	*2 pack*	**930-0139**
Gasket Kit, *includes Head, Base, & Exhaust,* 4.250" Bore		**900-0955**
O-ring kit, Oil Pump		**500-0850**

S&S® OIL

FEATURES AND BENEFITS

- Ultimate protection
- Superior lubrication for reduced engine wear and lower oil temperatures
- Provides consistent viscosity and resists thermal breakdown and oxidation at elevated temperatures
- Includes an oil drain plug o-ring for convenience



S&S® OIL CHANGE KIT

Description	Part #
2017–2020 Harley-Davidson® models with Milwaukee-Eight® engine 5 quarts of SAE 20W-50 synthetic engine oil with chrome oil filter	**3601-0492**

S&S® OIL

Description	Part #
20W50 Synthetic, 1 quart	**3601-0407**
20W50 Synthetic, 2.5 Gallon	**3601-0408**
Primary, Synthetic, 1 quart	**3603-0044**
80W140 Gear, Synthetic, 1 quart	**3604-0007**

OIL FILTERS

FEATURES AND BENEFITS

- Captures smaller particles than stock filters
- Low restriction to oil flow
- Direct bypass — bypass oil does not pass over dirty filter media
- Smaller diameter for easier installation
- Black or chrome finish



S&S® OIL FILTERS

Year Application	Micron Rating	QTY	Chrome	Black
1999–'17* Twin Cam 88®/96™/103™ and Milwaukee-Eight® engines	10µ	*each*	**31-4104A**	**31-4103A**
		12 pack	**310-0242**	**310-0241**

**Contains an anti-drain back valve*



STEALTH AIR CLEANER KIT REPLACEMENT PARTS
INCLUDING EC VERSIONS

1. Screw, SHCB, 5⁄16-18 x .500", Polished, Stainless Steel **170-0508**
2. Screw, SHC, Flanged Button, 1⁄4-20 UNC x .750" *(Each)* **500-0060**
3. Plate, Top, Air Filter, Molded, Plastic **170-0026**
4. Filter, Air, Tapered, Standard Pleated, 5.500" x 6.000" x 2.375", Cotton **170-0126**
5. Screw, SHCB, 1⁄4-20 UNC X .825" *(Each) 3 required* **500-0059**
6. Backplate, Air Cleaner, Throttle by Wire, Stock Bore, Injection Molded Polymer, M8 ..... **170-0353**
   EC Backplate ..... **N/A**
7. Screw, Backplate Vent, SHCB, 3⁄8-16 x 1-1⁄2", Polished,Stainless Steel *(Each) 2 required* **170-0045**
8. Washer, Flat, .380" x .880" x .024", Nitrile Rubber Coated, Cold Rolled Steel*(8 pack)* **50-7054**
9. O-ring, 2.75" ID x 2.875 OD, X 1⁄16" Buna, (-039) **50-8207-S**
10. Cover, Kit, Electrical Plug, Throttle by Wire, Aluminum, M8 ..... **170-0356**

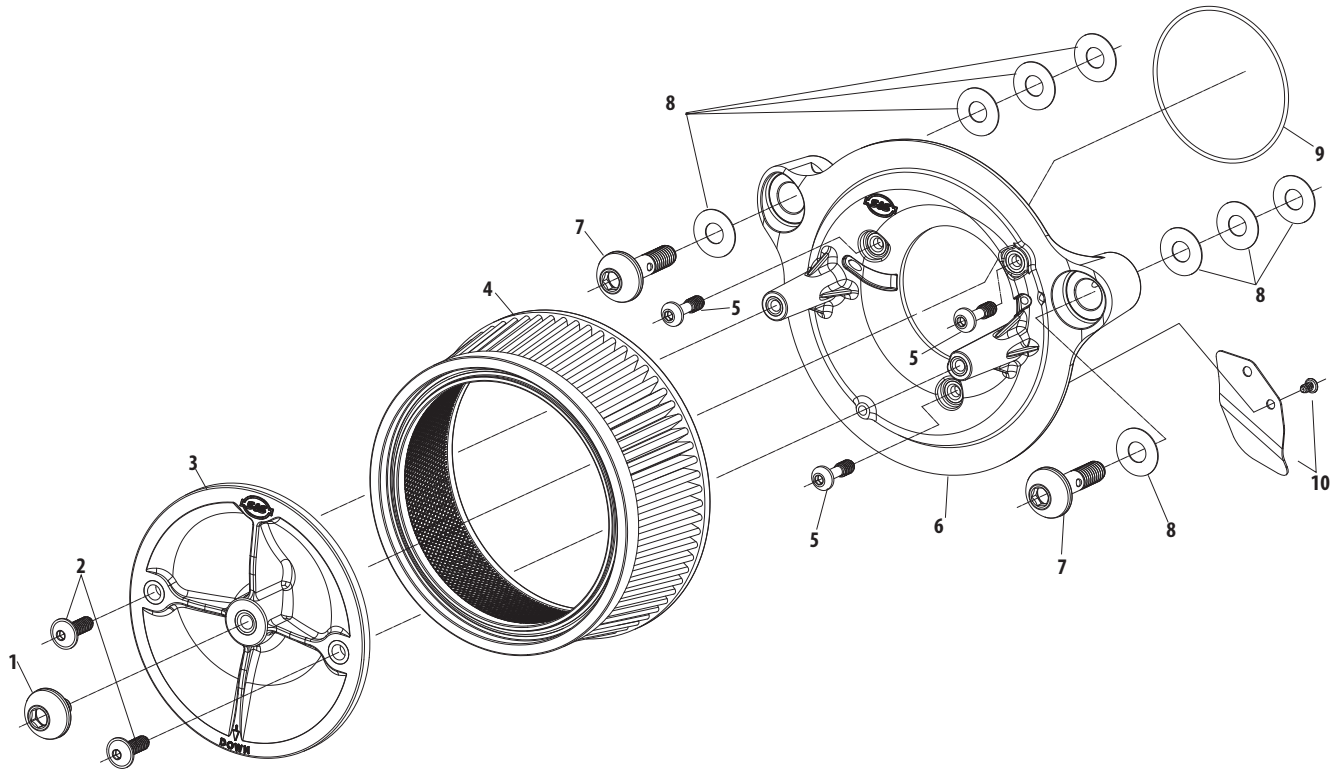

SUPERSTREET 2:1 EXHAUST SYSTEM REPLACEMENT PARTS

1. Pipe, Header, Super Street, 2 into 1, Weldment, 2018-'20 M8 Softail¨,
   - Standard Chassis ..... **551-0761±**
   - Fat Boy, FXDR & Breakout ..... **551-1050±**
2. Front Shield (Standard Chassis)
   - Black **551-0764A**
   - Chrome ..... **551-0766±**
   - Stainless **551-1417**

   Front Shield (Fat Boy, FXDR & Breakout)
   - Black **551-1057A**
   - Chrome ..... **551-1060±**
3. Rear Shield (Standard Chassis)
   - Black **551-0769A**
   - Chrome ..... **551-0771±**
   - Stainless **551-1418**

   Rear Shield (Fat Boy, FXDR & Breakout)
   - Black **551-1055A**
   - Chrome ..... **551-1059±**
4. Collector Shield
   - Black **551-1139**
   - Chrome ..... **551-0776±**
   - Stainless **551-1391**
5. Muffler—Race Only
   - Black **551-0750**
   - Chrome ..... **551-0754±**

   Muffler—Street Legal
   - Black **551-0751B**
   - Chrome ..... **551-0755B±**
   - Stainless **551-1414**
6. Bracket **551-0734**

Hardware Kit—Standard Chassis
- Race Only (incudes #7-16 below) **551-0735**
- Street Legal (incudes #7-16 below) **551-0736B**

Hardware Kit—Fat Boy, FXDR & Breakout
- Race Only (incudes #7-16 below) **551-1066**
- Street Legal (incudes #7-16 below) **551-1083A**

7. Adapter, Oxygen Sensor, 12mm to 18mm, Stainless Steel ... **550-0375**
8. Muffler clamp, band style **551-0135**
9. Screw **500-0877**
10. Screw **500-0763**
11. Nut,HSFH,5/16-24 UNF-2B x .283",Zinc,Steel *7593* **50-5025-S**
12. Gasket,Exh,Tapered,Stainless Steel *65324-83B, 65324-83A* **106-5029**
13. Clamp, Hose, Worm Drive, SAE #20 ..... **551-0527**
14. Clamp, Hose, Worm Drive, SAE #24 ..... **500-0791**
15. Clamp, Hose, Worm Drive, SAE #40 ..... **551-0402**
16. Plate,Nut,5/16-18 x 2",Clear,Zinc **551-0469**
17. Screw, BHC, High Temp Lock Patch, 1/4-20 x 3/8", Stainless Steel **500-0441**
18. Endcap, SuperStreet, Black. **551-0931**
19. Bracket, Bag Mount, (Standard Chassis) **551-1095**
20. Screw, BHC, 5/16-18 x 5/8", Zinc Plated (Standard Chassis) **500-0763**
21. Passanger Peg Bracket (Fat Boy, FXDR & Breakout) **551-1219**
22. Screw, SHC, 3/8-16 x 2-1/2", Zinc, Steel (Fat Boy, FXDR & Breakout) **500-1206**
23. Nut, Lock, Nylon Insert, Gr8, 3/8-16, Low Carbon Steel (Fat Boy, FXDR & Breakout) **500-1207**

Not Shown:

dB Reducer **551-0063**

Screw, SHC 10-32 x 3/4 ..... **500-0569**

See page 48 for mid mount brake pedal kit replacement parts

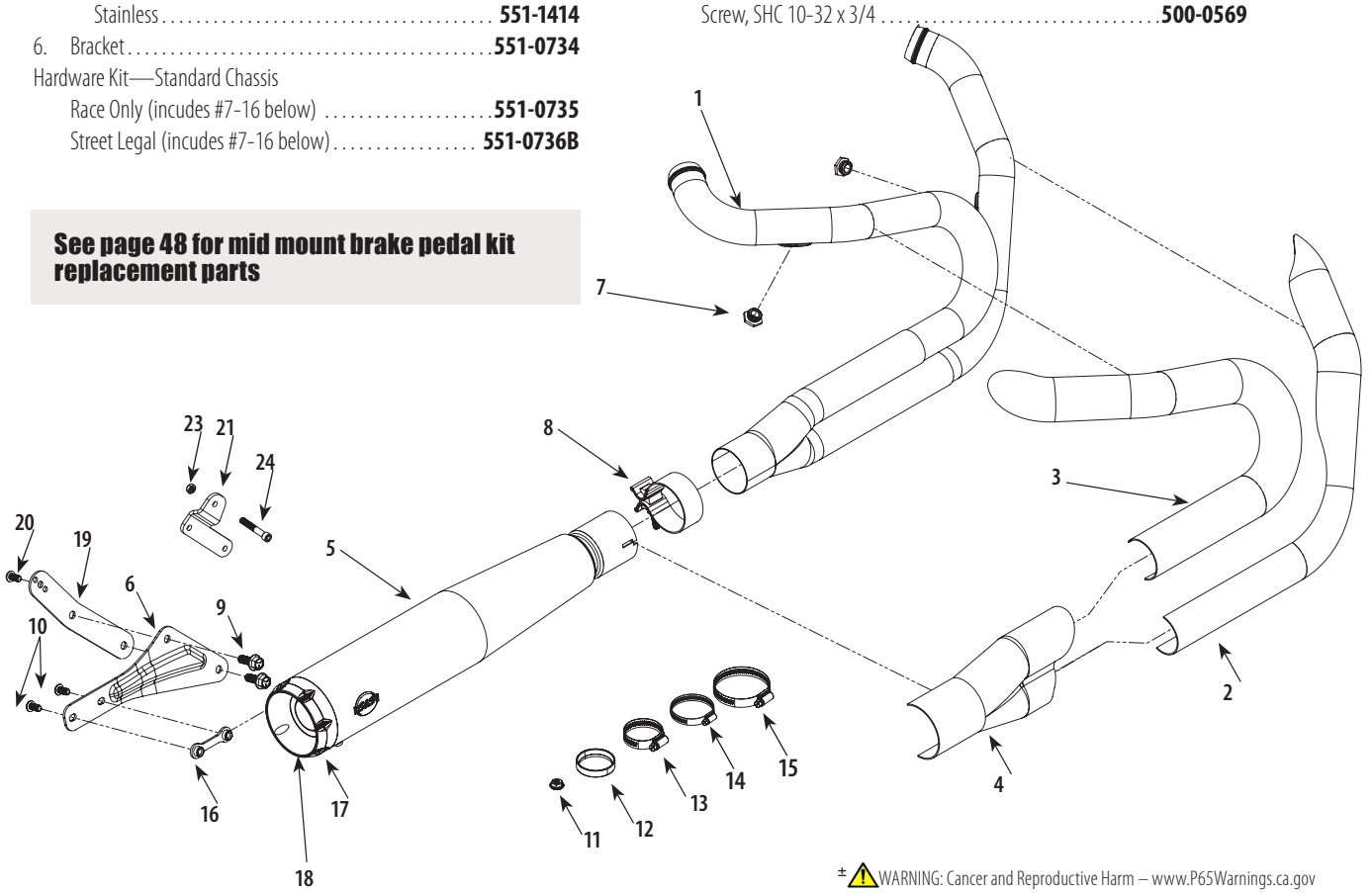

± WARNING: Cancer and Reproductive Harm – www.P65Warnings.ca.gov

Mk45 4.5" MUFFLER REPLACEMENT PARTS
INCLUDING EC VERSION

1. 4.5" Muffler assembly for 2017-'18 Models
   - Left, chrome..... **551-0149±**
   - Right chrome..... **551-0150±**
   - Left black..... **551-0151**
   - Right black..... **551-0152**
2. Endcap
   - Thruster chrome..... **550-0634A±**
   - Thruster Black Highlight Machined..... **550-0629A**
   - Tracer chrome..... **550-0636A±**
   - Tracer Black Highlight Machined..... **550-0632A**
3. Main baffle assembly, 4.5" muffler for 2017-'18 Models
   - Left..... **551-0007**
   - Right..... **551-0138**
4. Insulation, 4.5" muffler..... **551-0003**
5. Button head cap screw, Stainless, ¼"-20 x ⅜"..... **500-0441**
6. Baffle,Assembly,Muffler,SAE J2825..... **551-0026**
7. Hardware kit, muffler clamp and screws (N/S)
   - Left..... **551-0027**
   - Right..... **551-0148**

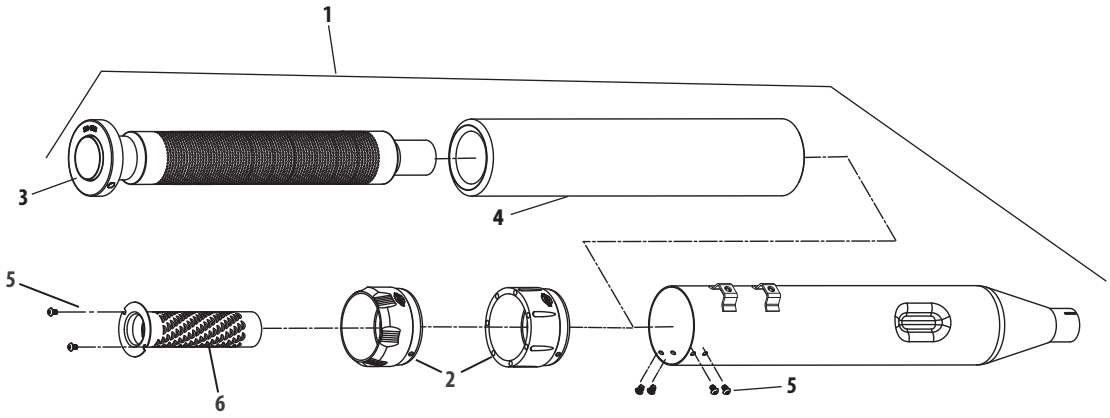

Mk45 REPLACEMENT MUFFLER SYSTEM
FOR EL DORADO M8 HIGH PERFORMANCE EXHAUST SYSTEM—STREET LEGAL

1. Endcap
   - Thruster Black Highlight Machined..... **550-0629A**
   - Tracer Black Highlight Machined..... **550-0632A**
2. Button head cap screw, Stainless, ¼"-20 x ⅜"..... **500-0441**
3. Hardware kit, muffler clamp and screws (N/S)..... **551-0027**

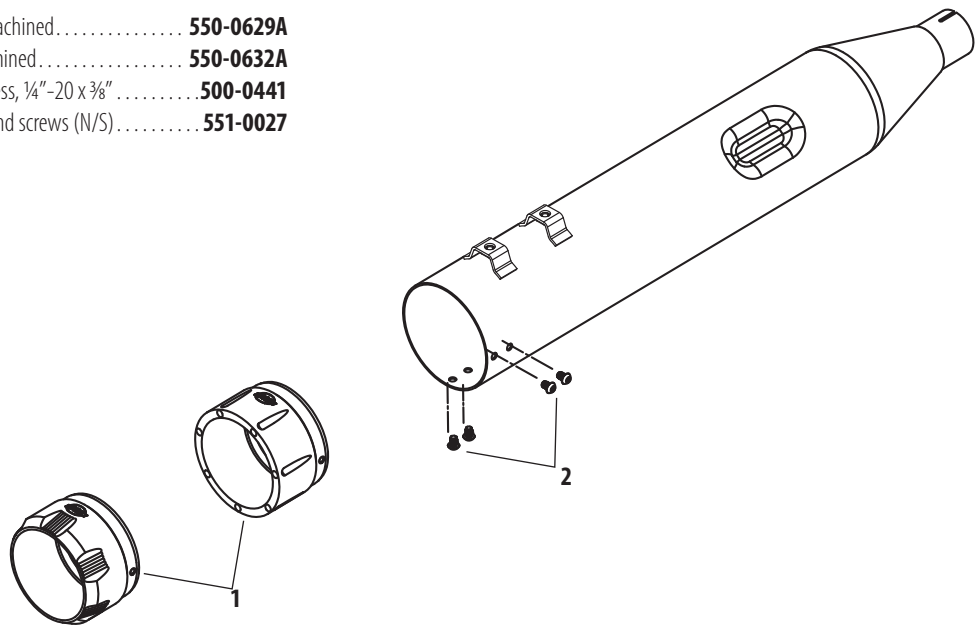

± ⚠ WARNING: Cancer and Reproductive Harm – www.P65Warnings.ca.gov

GRAND NATIONAL® MUFFLER REPLACEMENT PARTS
FOR 2018–2020 FAT BOB® MODELS

1. Muffler, Grand National, Black, 2018–2020 M8 Fat Bob® Front/Rear **551-0431**
2. Screw,Shc,High Temp Lock Patch,10-32 X ¾", Stainless Steel **500-0569**
3. 4" Endcap, Grand National, Black **551-0291**
4. dB Reducer Baffle Assembly **551-0063**
5. Baffle, Assembly **551-0422**
6. Fiberglass Wrap, Pillow, 12" X 13" **551-0276**
7. Screw, BHC, High Temp Lock Patch, ¼-20 . . . . . **500-0441**
8. Hardware Kit, Muffler, 2018 M8 Fat Bob® . . . . . **551-0425** Screw, Shcs, W/ Flat Washer, ¼-20 X 1",
9. Zinc, Astm A574-92A *4741A* **50-0092-S**
10. Clamp, Muffler, Band Style, 1.75" **551-0569**

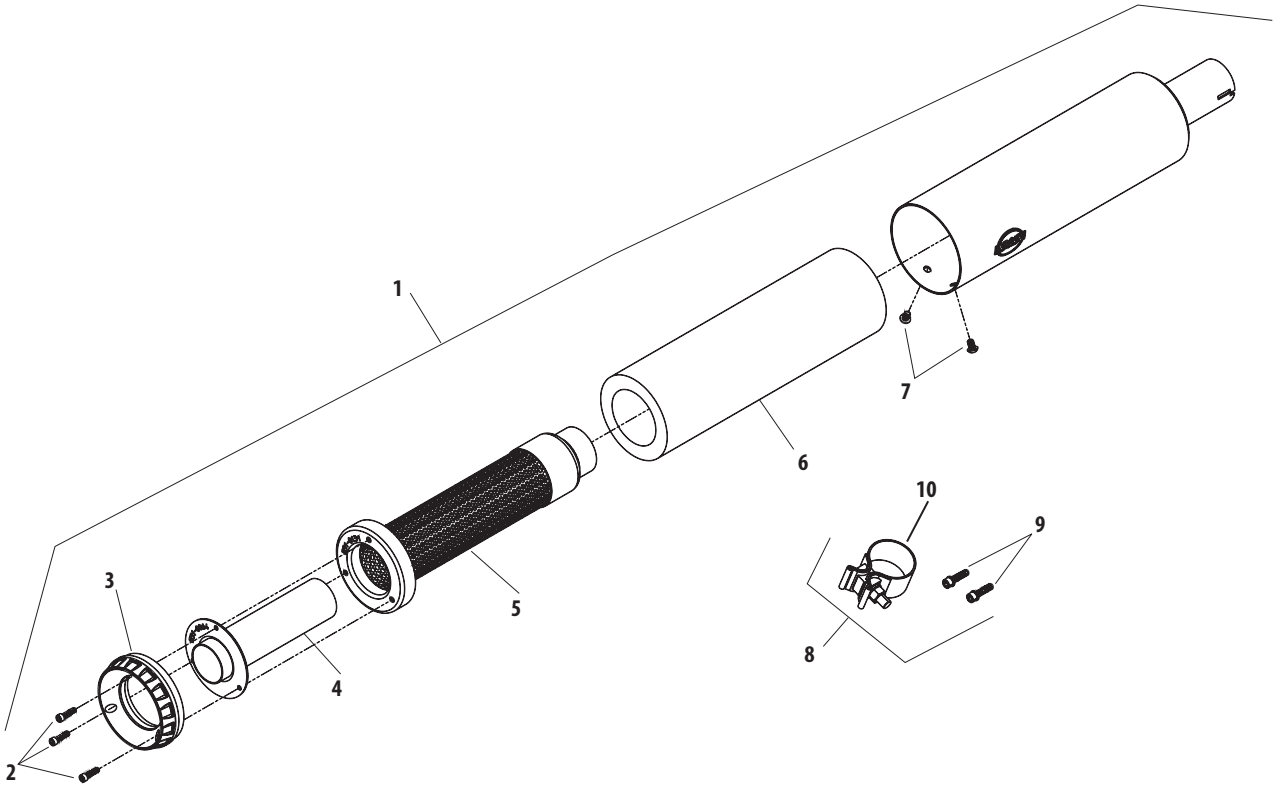

± ⚠ WARNING: Cancer and Reproductive Harm – www.P65Warnings.ca.gov

GRAND NATIONAL® MUFFLER REPLACEMENT PARTS
FOR 2018–'19 SOFTAIL® MODELS (EXCEPT FAT BOB®, SPORT GLIDE®, & FXDR MODELS)

1. Muffler Assembly
M8 HD® Softail® Street Bob®, Low Rider®, Slim®, Fat Boy® & Breakout® models
Top
Black, ... **551-0440**
Chrome ..... **551-0443±**
Bottom
Black **551-0452**
Chrome ..... **551-0455±**
M8 Softail® Heritage® Classic and Deluxe
Chrome Front or Rear ..... **551-0461±**

2. Screw, SHC, High Temp Lock Patch, 10-32x3/4", Stainless Steel **500-0569**

3. 3.25" Endcap, Grand National, Black **551-0292**

4 dB Reducer Baffle Assembly **551-0304**

5. Baffle Assembly **551-0299**

6. Fiberglass Wrap **551-0305**

7. Screw, BHC, High Temp Lock Patch, ¼-20 ..... **500-0441**

Parts Not Shown

8. Hardware Kit,Muffler,2018 M8 Fat Bob® **551-0425**

9. Screw, SHCS, w/Flat Washer, ¼-20x1" *4741A* **50-0092-S**

10. Clamp, Muffler, Band Style, 1.75" **551-0028**

11. Muffler Gasket **551-0360**

12. Bracket Cover *(Exc. Heritage® Classic and Deluxe)* **551-0538**

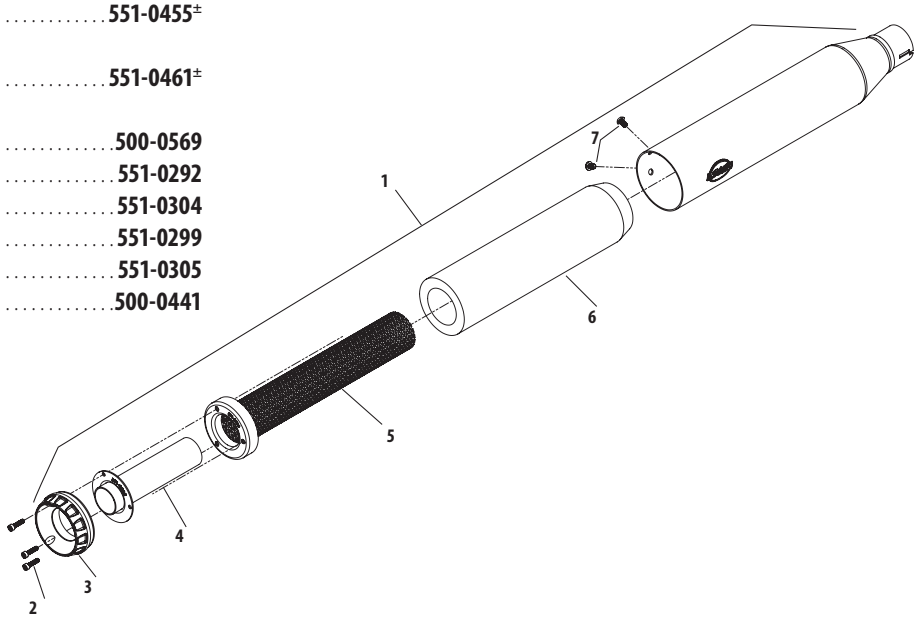

SLASH CUT MUFFLER REPLACEMENT PARTS
FOR 2018–'19 SOFTAIL® MODELS (EXCEPT FAT BOB®, SPORT GLIDE®, & FXDR MODELS)

1. Muffler Assembly
M8 HD® Softail® Street Bob®, Low Rider®, Slim®, Fat Boy® & Breakout® models
Top
Black **551-0434**
Chrome ..... **551-0437±**
Bottom
Black **551-0446**
Chrome ..... **551-0449±**
M8 Softail® Heritage® Classic and Deluxe®
Chrome, Front, or Rear ..... **551-0458±**

2. Screw, BHC, High Temp Lock Patch, 10-32x3/8", Stainless Steel **500-0570**

3. dB Reducer Baffle Assembly **551-0350**

4. Baffle Assembly **551-0301**

5. Screw, BHC, High Temp Lock Patch, ¼-20 ..... **500-0441**

Parts Not Shown

6. Hardware Kit, Muffler **551-0425**

7. Screw, SHCS, w/Flat Washer, ¼-20x1" *4741A* **50-0092-S**

8. Clamp, Muffler, Band Style, 1.75" **551-0028**

9. Muffler Gasket **551-0360**

10. Bracket Cover *(Exc. Heritage® Classic and Deluxe®)* **551-0538**

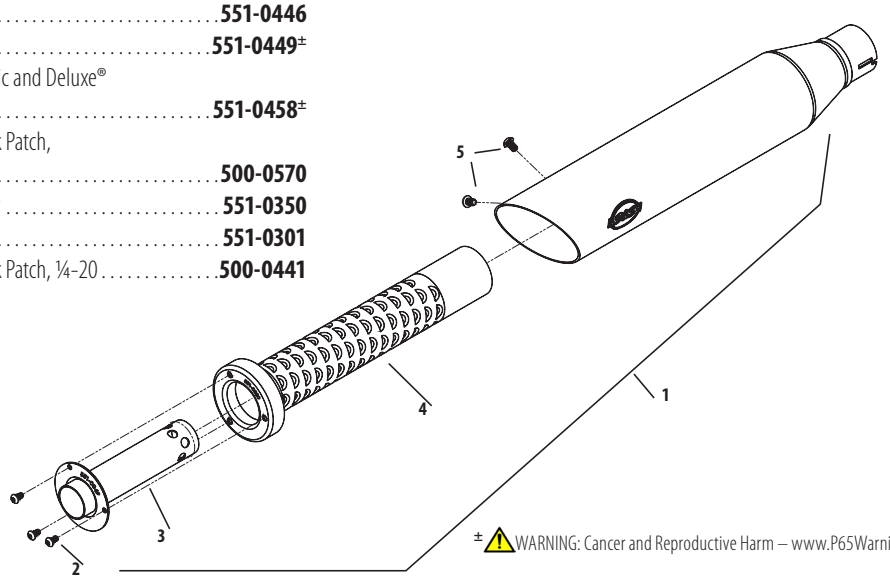

± ⚠ WARNING: Cancer and Reproductive Harm – www.P65Warnings.ca.gov

GRAND NATIONAL® 4" MUFFLERS REPLACEMENT PARTS

1. 4" Muffler assembly with Grand National Endcap
   - Left, Chrome. . . . . **551-0181**±
   - Right, Chrome . . . . . **551-0180**±
   - Left, Black. **551-0183**
   - Right, Black **551-0182**
3. Endcap *(Left and Right)*. **551-0291**
4. Main baffle assembly
   - Left **551-0053**
   - Right. **551-0132**
5. dB reducer baffle *(Left and Right)* **551-0063**
6. Button head cap screw, Stainless, ¼"-20x⅜" **500-0441**
7. Socket head cap screw, Stainless, 10-32x¾". **500-0569**
9. Hardware kit, muffler clamps and screws (N/S) **551-0027**

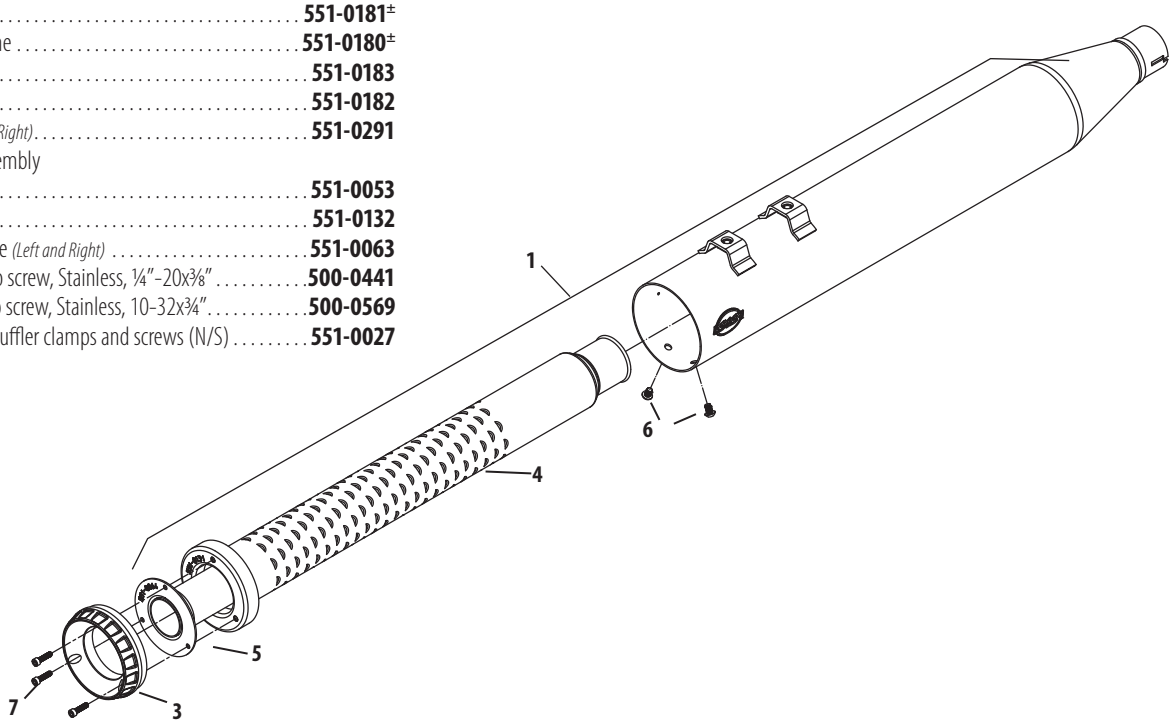

SLASH CUT 4" MUFFLERS REPLACEMENT PARTS

1. 4" Muffler assembly Slash Down
   - Left, Chrome. . . . . **551-0185**±
   - Right, Chrome . . . . . **551-0184**±
   - Left, Black. **551-0187**
   - Right, Black **551-0186**
2. Main baffle assembly
   - Left **551-0053**
   - Right. **551-0132**
3. dB reducer baffle *(Left and Right)* **551-0063**
4. Button head cap screw, Stainless, ¼"-20x⅜" **500-0441**
5. Button head cap screw, Stainless, 10-32x⅜". **500-0570**
6. Hardware kit, muffler clamps and screws (N/S) **551-0027**

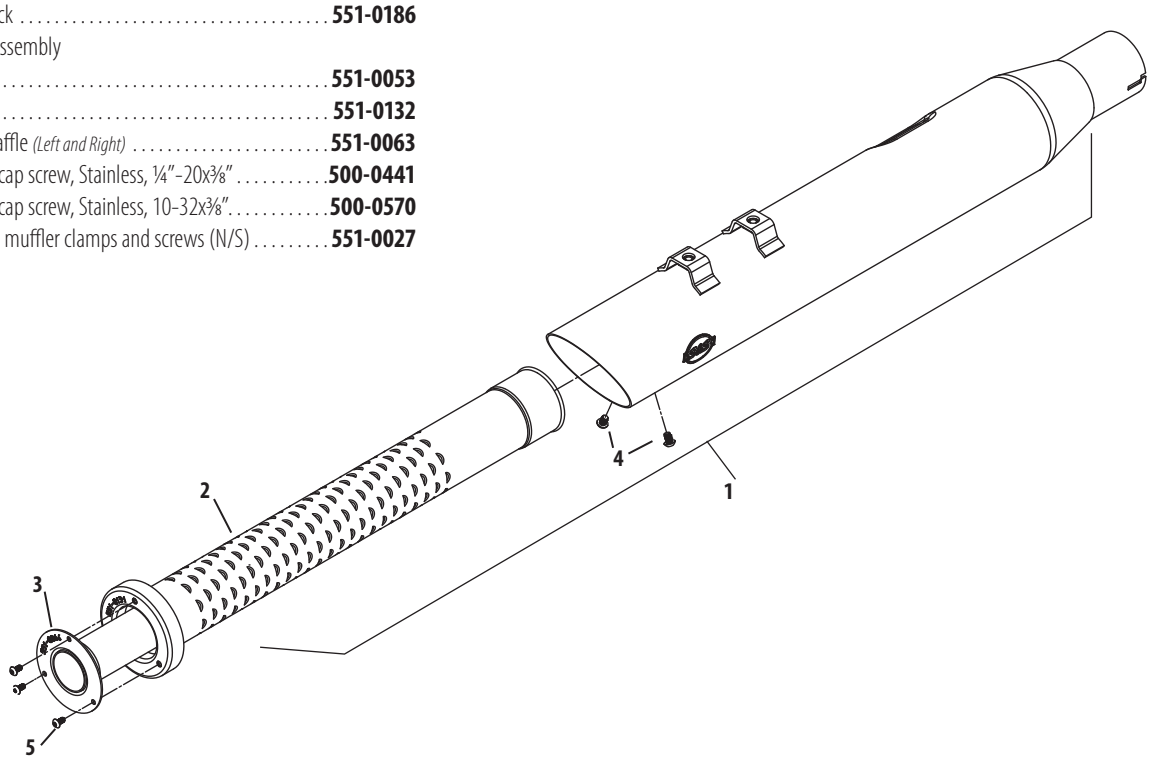

± ⚠ WARNING: Cancer and Reproductive Harm – www.P65Warnings.ca.gov

SIDEWINDER 2:1 EXHAUST SYSTEM REPLACEMENT PARTS

1. Muffler, Assembly, 2 Into 1, 2017-'18 M8 Touring
   - Race, Chrome ..... **551-0403±**
   - Race, Black **551-0394**
   - Street Legal, Chrome ..... **551-0529C±**
   - Street Legal, Black **551-0530C**
2. Header, Assembly, Weldment, 2017-'18 M8 Touring **551-0367**
3. Shield, Front, Heat, 2017-'18 M8 Touring
   - Chrome ..... **551-0385±**
   - Black **551-0387**
4. Shield, Rear, Heat, 2017-'18 M8 Touring
   - Chrome ..... **551-0391±**
   - Black **551-0393**
5. Collector, Heat Shield, 2017-'18 M8 Touring
   - Chrome ..... **551-0379±**
   - Black **551-0381**
6. Clamp, Muffler, Band Style, 2.5" **551-0135**
7. Nut, Flanged, Serrated, ⅜-18 ..... **500-0554**
8. Bracket, Header Mount, 2 Into 1, Powdercoated, 2017-'18 M8 Touring **551-0397**
9. Clamp, Header Mount, 2 Into 1, Chrome Plate, Mild Steel, 11 Gauge, 2017-'18 M8 Touring ..... **551-0361±**
10. Bolt, Carriage, 3/8-16 x 1-1/4" **500-0553**
11. Adapter, Oxygen Sensor, 12mm To 18mm, Stainless Steel **550-0375**
12. Clamp, Hose, Worm Drive, SAE #20 ..... **551-0527**
13. Clamp, Hose, Worm Drive, SAE #24 ..... **500-0791**
14. Clamp, Hose, Worm Drive, SAE #40 ..... **551-0402**
15. dB reducer (N/S) **551-0026**
16. Endcap, Sidewinder 2:1 ..... **551-0395**
17. Nut, HSFH, 5/16-24 ..... **50-5025-S**
18. Gasket, Exhaust, Tapered **106-5029**

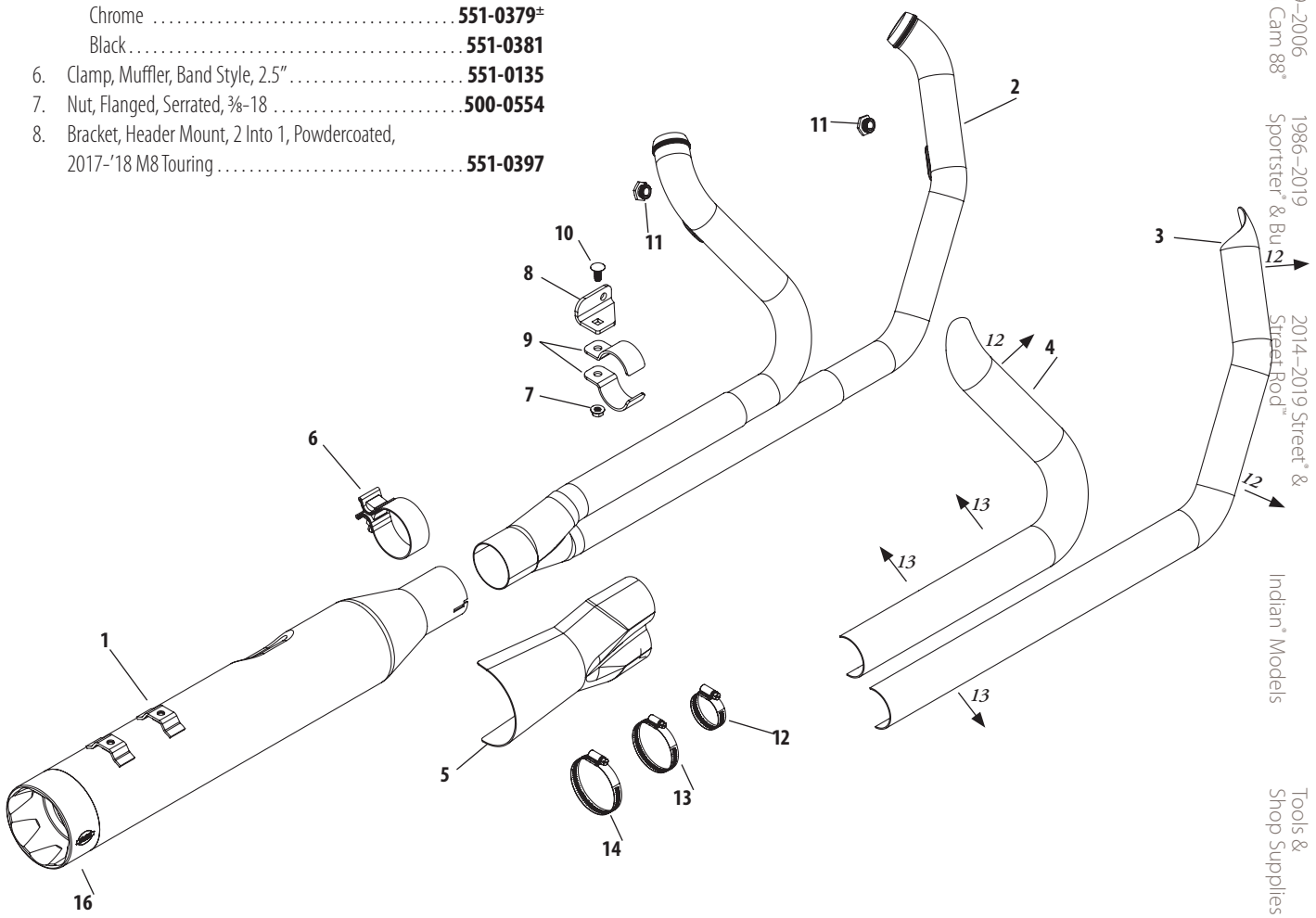

± WARNING: Cancer and Reproductive Harm – www.P65Warnings.ca.gov

SHADOW PIPE REPLACEMENT PARTS

1. Tube, crossover, power tune dual, formed **551-0080**
2. Shield, left, power tune dual,
   Chrome . . . . . **551-0115**±
   Black **551-0116**
3. Nut, HSFH, 5/16-18 UNC-2b x .283", Zinc, steel **50-5053-S**
4. Clamp, p-style, crossover, power tune dual header, ... **551-0121**
5. Bolt, carriage, 5/16"-18 x 3/4" **500-0555**
6. Hose Clamp #20 (2 req.) **551-0527**
7. Band style clamp **551-0028**
8. Endcap **551-0994**

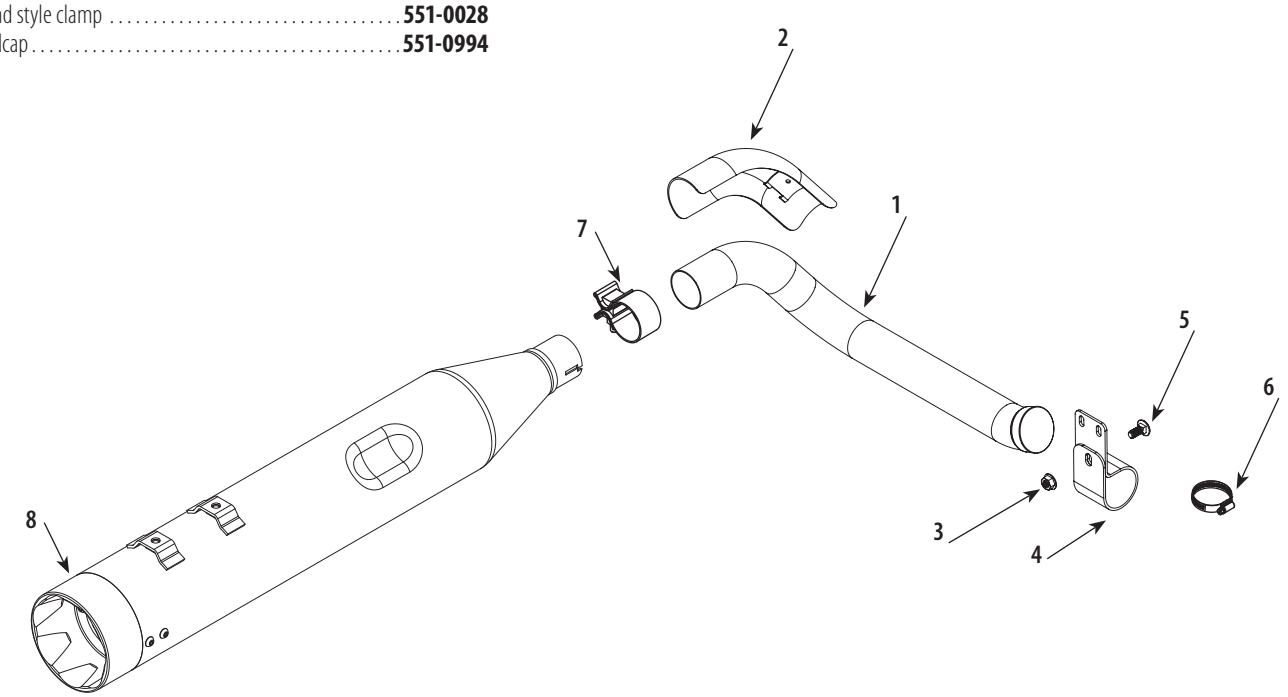

± ⚠ WARNING: Cancer and Reproductive Harm – www.P65Warnings.ca.gov

GRAND NATIONAL® 2:2 EXHAUST SYSTEM REPLACEMENT PARTS

1. Pipe, Header, 2 into 2, Weldment, M8 Softail¨ except Fat Boy¨, and Breakout¨ **551-0547**
2. Front Shield,
   - Black **551-0551**
   - Chrome ..... **551-0553±**
3. Rear Shield,
   - Black **551-0557**
   - Chrome ..... **551-0559±**
4. Lower Rear Shield,
   - Black **551-0661**
   - Chrome ..... **551-0663±**
5. Muffler Body,
   Race
   - Black **551-0474**
   - Chrome ..... **551-0477±**

   Street Legal
   - Black **551-0905A**
   - Chrome ..... **551-0906A±**
6. Bracket,Mounting,2 Into 2,Black,M8 Softail® **551-0562**
7. Bracket,Bottom,Mounting,2 Into 2,Black **551-0563**
8. Gasket, Muffler, 3.25", 2018 M8 Softail® **551-0360**
9. Clamp, Muffler, Band Style **551-0028**
10. Gasket,Exhaust,Tapered,Stainless Steel, 1984-up bt, 1986-up xl **106-5029**
11. Adapter, Oxygen Sensor, 12mm to 18mm, Stainless Steel **550-0375**
12. Nut, HSFH, 5/16-18 UNC-2B x .283", Zinc, Steel **50-5053-S**
13. Clamp, Hose, Worm Drive, SAE #20 ..... **551-0527**
14. Plate, Nut, 5/16-18 x 2", Clear, Zinc **551-0469**
15. Screw, BHC, 5/16-18 x 5/8", Zinc Plated **500-0763**
16. Screw, SHCS, 3/8-16 x 1" **50-0161**
17. Screw, Flanged, 5/16-18 x 5/8", Zinc Plated **500-0984**
18. Endcap **551-0291**

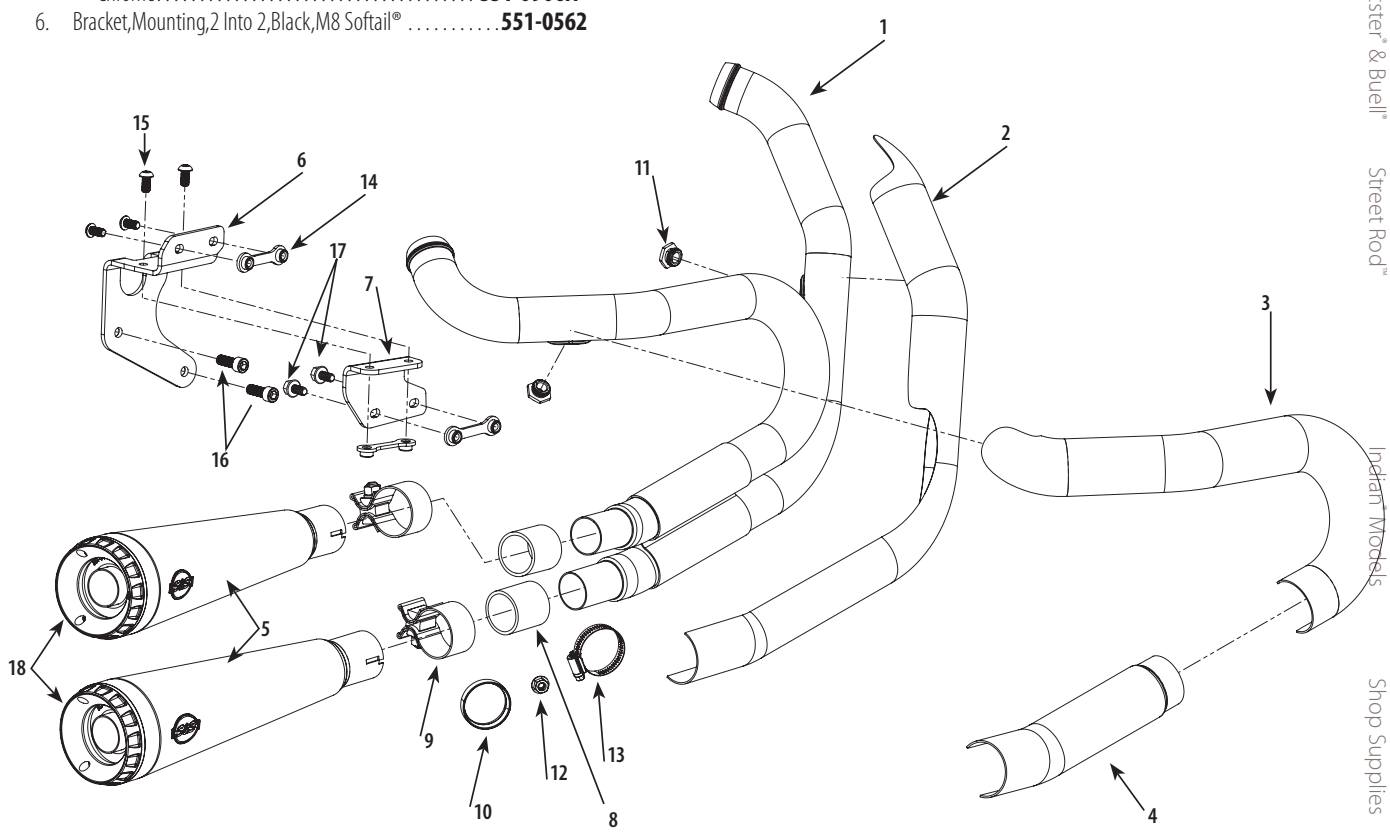

See page 48 for mid mount brake pedal kit replacement parts

± ⚠ WARNING: Cancer and Reproductive Harm – www.P65Warnings.ca.gov

GNX SLIP-ON REPLACEMENT PARTS

1. 4.5" Muffler assembly for 2017–'20 Models
   - Right, Black **551-1268**
   - Left, Black **551-1269**
   - Right, Chrome **551-1270**
   - Left, Chrome **551-1271**
2. Muffler Shell (with Badge)
   - Right, Black **551-1259**
   - Left, Black **551-1262**
   - Right, Chrome **551-1260**
   - Left, Chrome **551-1263**
3. Endcap **551-1251**
4. Baffle
   - Left, ... **551-1246**
   - Right. **551-1247**
5. dB reducer **551-1274**
6. Screw, BHC, 1/4-20 x 3/8", Stainless Steel **500-0441**
7. Screw, SHC, 10-32 x 3/4", Stainless Steel **500-0569**

Not Shown

Hardware kit, muffler clamps and screws
- Left **551-0027**
- Right. **551-0148**

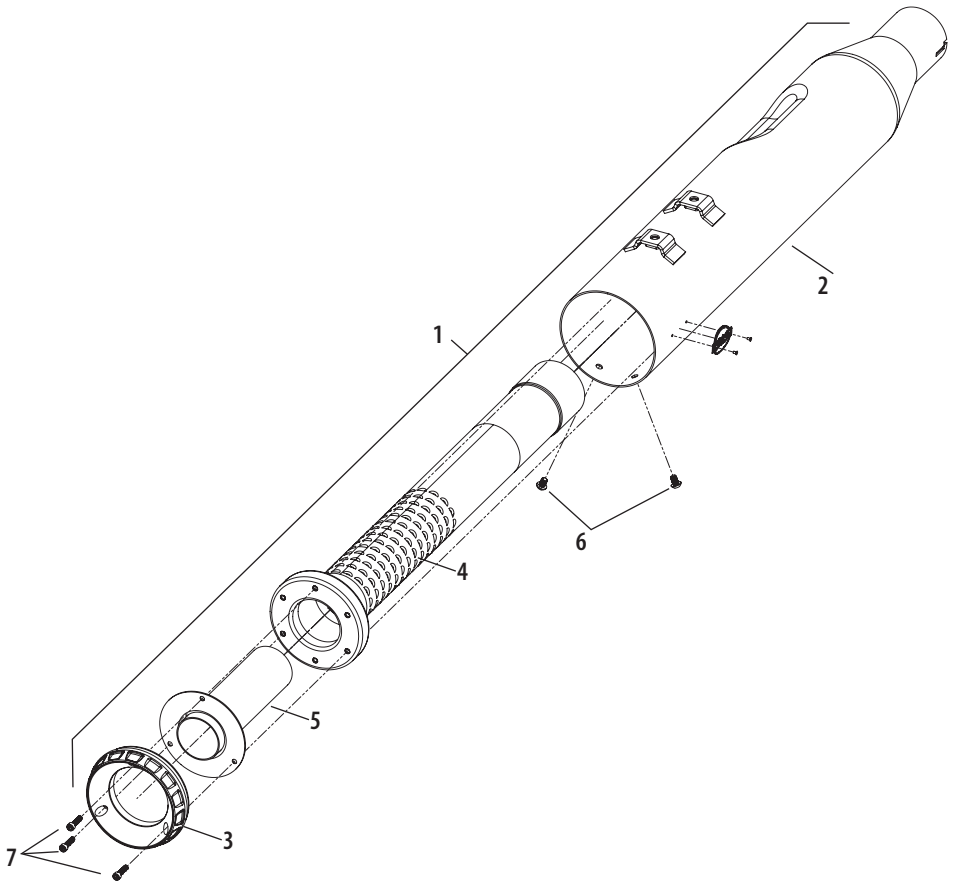

± ⚠ WARNING: Cancer and Reproductive Harm – www.P65Warnings.ca.gov

POWER TUNE® DUAL REPLACEMENT HEADER SYSTEM
FOR EL DORADO M8 HIGH PERFORMANCE EXHAUST SYSTEM—STREET LEGAL



REPLACEMENT HEADER FOR EL DORADO M8 HIGH PERFORMANCE EXHAUST SYSTEM—STREET LEGAL

Finish	Part #
Chrome	**550-0704**
Black	**550-0705**

DISCLAIMER: NOT LEGAL FOR SALE OR USE IN CALIFORNIA ON ANY POLLUTION CONTROLLED MOTOR VEHICLE. NOT LEGAL FOR SALE OR USE NATIONWIDE ON ANY FEDERAL POLLUTION CONTROLLED MOTOR VEHICLE UNDER THE CLEAN AIR ACT
This part is emissions compliant only when used as part of a complete El Dorado exhaust package.
⚠ WARNING: Cancer and Reproductive Harm – www.P65Warnings.ca.gov

POWER TUNE® DUAL HEADER REPLACEMENT PARTS
FOR EL DORADO M8 HIGH PERFORMANCE EXHAUST SYSTEM—STREET LEGAL

1. Pipe, header, power tune dual, header pipe weldment **551-0198**
2. Gasket, exhaust, tapered, stainless steel, *(2 Req)* **106-5029**
3. Adapter, oxygen sensor, 12mm to 18mm, stainless steel *(2 Req)* **550-0375**
4. Clamp, muffler, band style **551-0028**
5. Tube, crossover, power tune dual, formed, ... **551-0229**
6. Shield, left, power tune dual,
   - Chrome ..... **551-0115±**
   - Black **551-0116**
7. Nut, HSFH, 5/16-18 UNC-2b x .283", Zinc, steel **50-5053-S**
8. Clamp, p-style, crossover, power tune dual header **551-0121**
9. Bolt, carriage, 5/16"-18 x 3/4" **500-0555**
10. Clamp, hose *(8 Req)* **551-0124**
11. Shield, front, power tune dual,
    - Chrome ..... **551-0206±**
    - Black **551-0207**
12. Shield, rear, power tune dual,
    - Chrome ..... **551-0213±**
    - Black **551-0214**

Not Shown
Hardware kit, power tune dual, header
Includes items 2, 3, 4, 7, 8, and 9 ..... **551-0215**

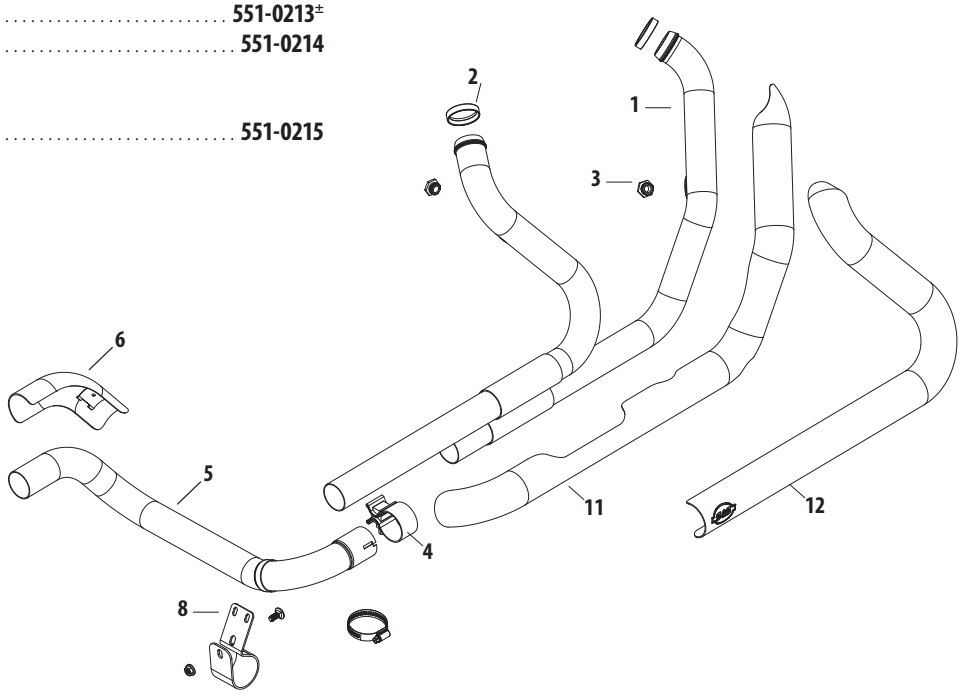

⚠ WARNING: Cancer and Reproductive Harm – www.P65Warnings.ca.gov

MID MOUNT BRAKE PEDAL KITREPLACEMENT PARTS
FOR S&S SUPERSTREET 2:1 & GRAND NATIONAL 2:2 EXHAUST SYSTEMS

1. Lever, Brake, Mid Control, Powdercoated, Gloss Black, 2018-up M8 Softail¨ **561-0014**
2. Pad, Footrest, Slip On, 2-1/2" x 2-3/4" x 7/8", Rubber **500-0954**
3. Bellcrank, Mid Control, Powdercoated, Gloss Black, 2018-up M8 Softail¨ **561-0012**

Hardware Kit, Brake Lever, Mid Control, 2018-up M8 Softail¨ . . **561-0005**
(includes 4-6 below)

4. Spacer, Powdercoated, 1-1/8" OD x 7/16" ID x 5/8", Gloss Black *(each, qty 2 needed)* **561-0004**
5. Washer, Flat, 5/8" x .390" x .078", Stainless Steel, 18-8 *(each, qty 2 needed)* **500-1060**
6. Screw, BHC, 3/8-16 x 2-1/4", Zinc Plated, Alloy Steel *(each, qty 2 needed)* **500-1044**

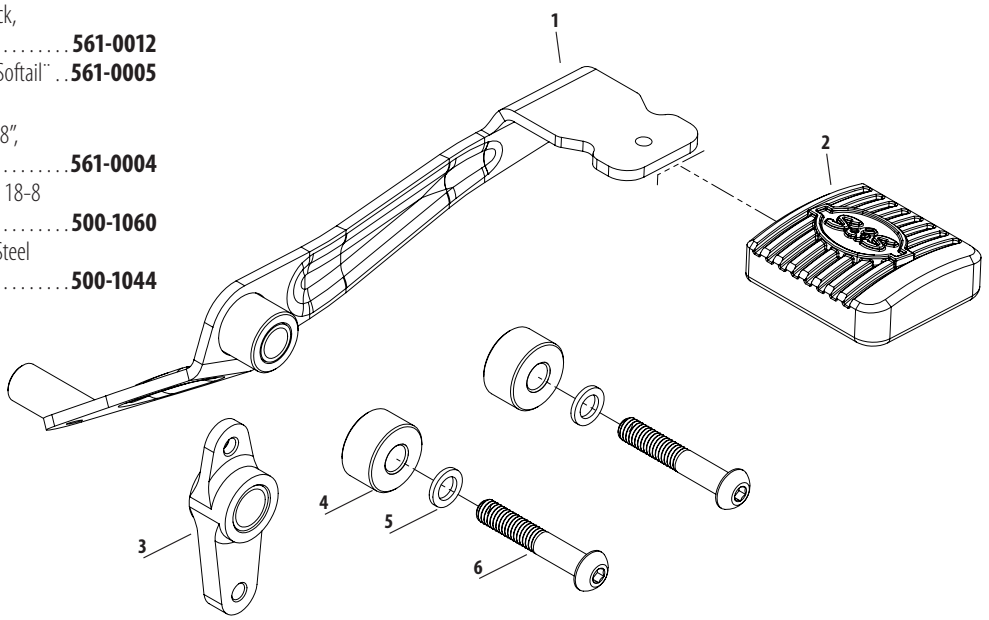

GRAND NATIONAL® EC SLIP-ON MUFFLER REPLACEMENT PARTS

1. Muffler
   Upper, Black,
   Street Bob®, Low Rider®, Slim®, Fat Boy® & Breakout® . . . **551-0946**
   Lower, Black,
   Street Bob, Low Rider, Slim, Fat Boy & Breakout **551-0948**
   Upper, Chrome,
   Street Bob, Low Rider, Slim, Fat Boy & Breakout **551-0947**
   Lower, Chrome,
   Street Bob, Low Rider, Slim, Fat Boy & Breakout **551-0949**
   Chrome, Heritage® and Deluxe **551-0950**
2. Hardware Kit. **551-0425**
3. Gasket (N/S) **551-0360**

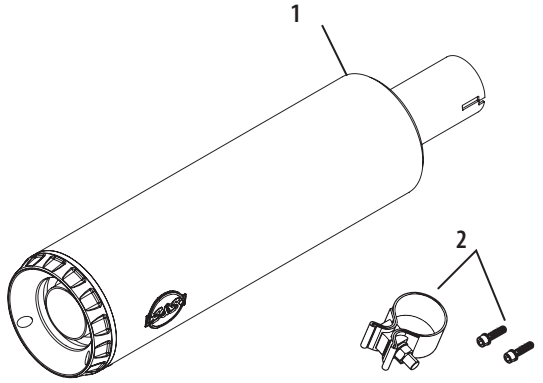

SLASH-CUT EC SLIP-ON MUFFLER REPLACEMENT PARTS

1. Muffler
   Upper, Black,
   Street Bob®, Low Rider®, Slim®, Fat Boy® & Breakout® . . . **551-0941**
   Lower, Black,
   Street Bob, Low Rider, Slim, Fat Boy & Breakout **551-0943**
   Upper, Chrome,
   Street Bob, Low Rider, Slim, Fat Boy & Breakout **551-0942**
   Lower, Chrome,
   Street Bob, Low Rider, Slim, Fat Boy & Breakout **551-0944**
   Chrome, Heritage and Deluxe **551-0945**
2. Hardware Kit **551-0425**
3. Gasket (N/S) **551-0360**

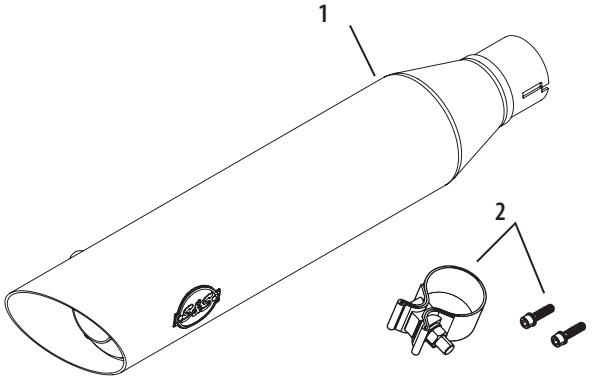

OIL PUMP REPLACEMENT PARTS

1. Dowel pin, 0.125"x0.750", *2 Pack* **500-0967**
2. Pressure Relief Valve Assembly **500-0949**
3. Stainless Steel Mesh Screen (2) **310-0546**
4. Rotor Set, Oil Pump, Cam Chest Scavenge **310-1092**
5. Oil Pump Housing, Return Side ..... **N/A**
6. Oil Pump Housing, Supply Side, Oil Cooled ..... **N/A**
   Oil Pump Housing, Supply Side Water Cooled ..... **N/A**
7. Divider Plate **310-0948**

8a. Rotor Set, Oil Pump Feed Gear (Oil-Cooled models) **310-0955**

8b. Rotor Set, Oil Pump, Feed Gear (Water-Cooled models) **310-1048**

9. Rotor Set, Oil Pump, Flywheel Scavenge **310-1048**
10. ¼" Pipe Plug *5 Pack* **500-0969**
11. Retaining Ring *5 Pack* **500-0968**
12. Magnet, .250" x .500" ..... **N/A**

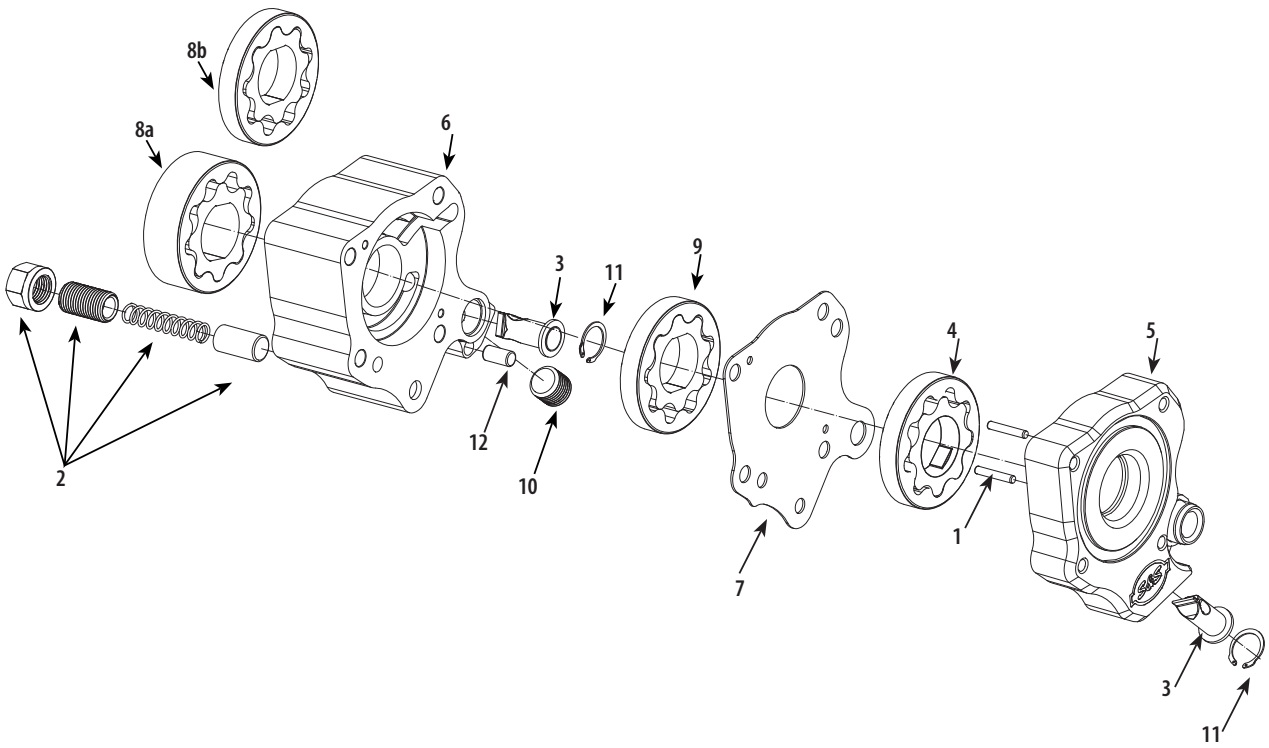

CAM SUPPORT PLATE REPLACEMENT PARTS

1. Cam support plate ..... **N/A**
2. ⅛" pipe plug, ***45830-48*** *10 pack* **50-1015**
3. ¼" pipe plug, *5 pack* **500-0969**
4. M8 cam support plate oil supply plug kit **500-0966**
5. Hydraulic tensioner block off plate kit N/S. **310-0962**
6. O-ring kit N/S **500-0850**

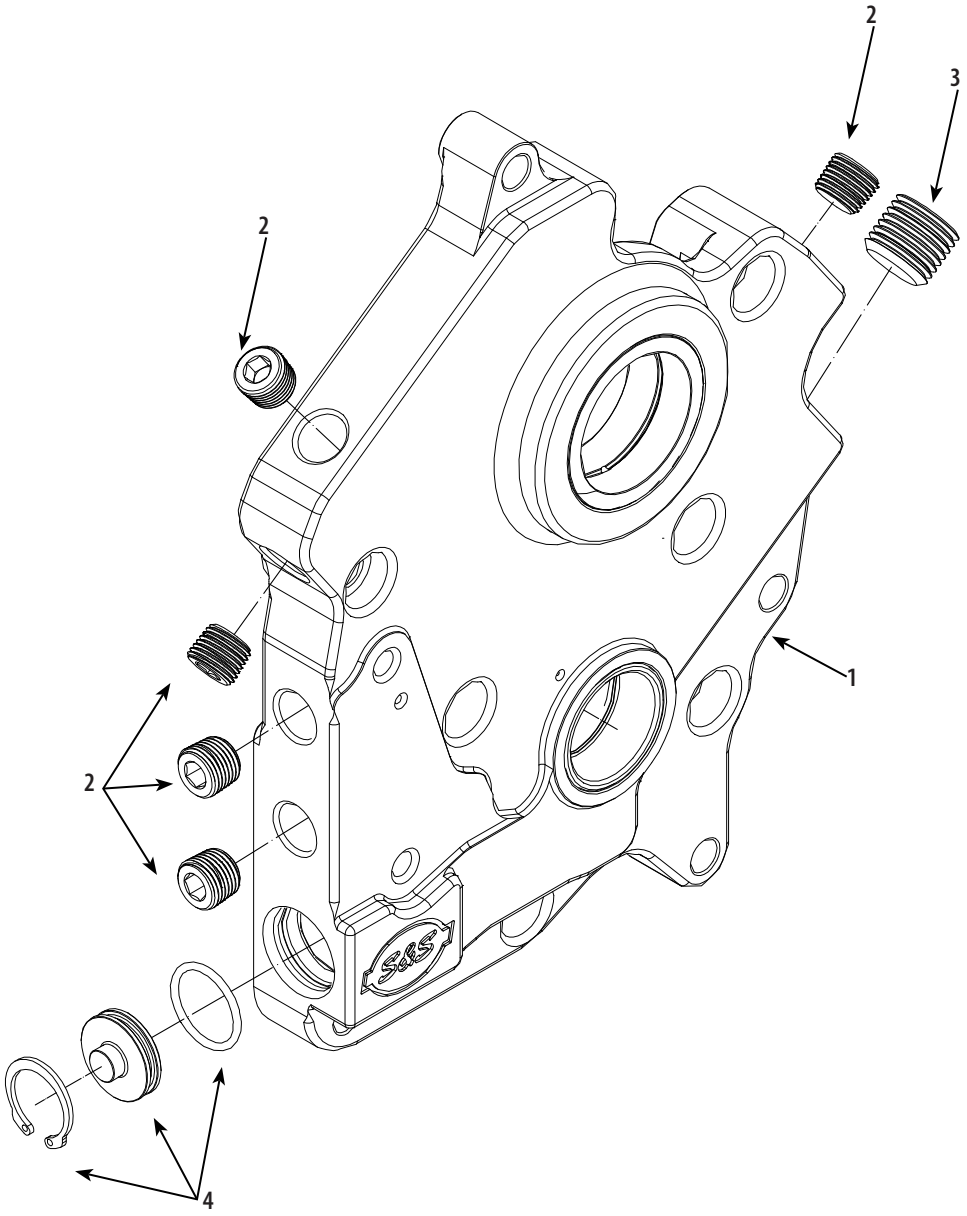

All reference to HD® part numbers is for identification purposes only. We in no way are implying that any of S&S Cycle's products are original equipment parts or that they are equivalent to the corresponding HD® part number shown.

CAM KIT REPLACEMENT PARTS—CHAIN

1. Gasket Cam Cover M8. . . . . **310-0911**
2. Cam Shaft . . . . . **N/A**
3. Inner Cam Bearing *9215* **31-4199-S**
4. O-Ring, (-116) .737" ID x .942 OD ,Viton **50-7954-S**
5. O-Ring, 11/16 ID x 15/16" OD, Vition *11293, 11157, 11101, 11190* . **50-8039**

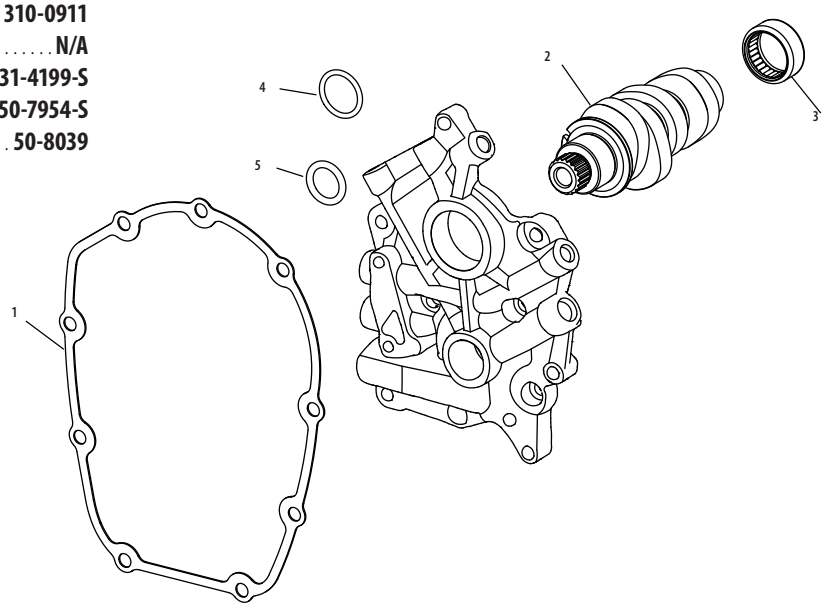

CAM KIT REPLACEMENT PARTS—GEAR

1. Parallel Key **106-1348**
2. Gasket Cam Cover M8. . . . . **310-0911**
3. Cam Shaft . . . . . **N/A**
4. Inner Cam Bearing *9215* **31-4199-S**
5. Gear, Cam Drive. **330-0621**
6. Gear, Pinion 31 tooth
   - Standard Size. **330-0622**
   - Undersized. **330-0626**
   - Oversized **330-0627**
7. Plate, Oil Hole Block-off. **330-0610**
8. Button Head Screw ¼-20x ¾" (2 Req). **50-0288-S**
9. O-Ring, (-116) .737" ID x .942 OD ,Viton **50-7954-S**
10. O-Ring, 11/16 ID x 15/16" OD, Vition *11293, 11157, 11101, 11190* . **50-8039**
11. Flat Washer, .405" x 1.150: x .230" Alloy Steel **50-7056**
12. Screw, SHCS, 3/8-24 x 1-3/4" Black **50-0132**
13. Screw, HHC, Flanged, Gr8, 5/16-18 x 3/4" Black *25566-06*. . . **50-0100**

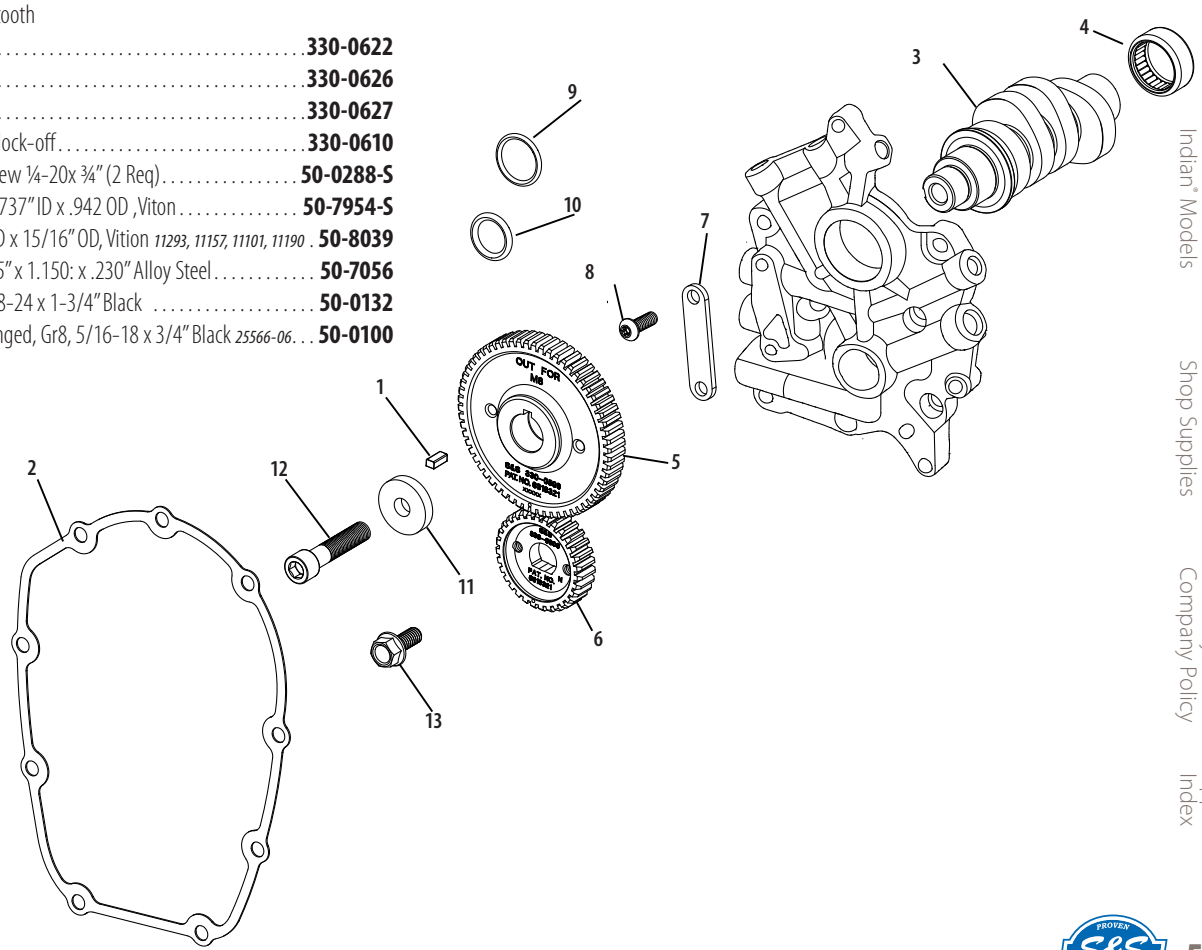

3 PIECE FLYWHEEL REPLACEMENT PARTS

Replacement Parts:

1. Gear, Balancer Drive, 2017-up M8 Models **330-0701**
2. Plug, Drive, .8992" x .950", Steel, Fatigue Proof **106-4991**
3. Washer, Flywheel, Thrust, 1.780" x 2.812" x .040", Bronze, 2017-up M8 Models **320-0597**
4. Crankpin, Press-In, Straight, Standard, 1.772", 2017-up M8 Models **340-0200**
5. Bearing, Assembly, Connecting Rod, Roller, 1.772" CP, 3 Piece, Standard, 2017-up M8 Models **340-0222**
6. Connecting Rod, Assembly, Heavy Duty, Tapered Wristpin, 8.015", 2017-up M8 Models **340-0202**
   Connecting Rod, Assembly, Heavy Duty, Full Width Wristpin, 8.015", 2017-up M8 Models **340-0203**
   Connecting Rod, Assembly, Heavy Duty, Tapered Wristpin, 7.953", 2017-up M8 Models **340-0204**
   Connecting Rod, Assembly, Heavy Duty, Full Width Wristpin, 7.953", 2017-up M8 Models **340-0205**
   Connecting Rod, Set, Heavy Duty, Tapered Wristpin, 8.015", 2017-up M8 Models **340-0214**
   Connecting Rod, Set, Heavy Duty, Full Width Wristpin, 8.015", 2017-up M8 Models **340-0215**
   Connecting Rod, Set, Heavy Duty, Tapered Wristpin, 7.953", 2017-up M8 Models **340-0216**
   Connecting Rod, Set, Heavy Duty, Full Width Wristpin, 7.953", 2017-up M8 Models **340-0217**
7. Flywheel, Partial Assembled, Right ..... **N/A**
8. Flywheel, Partial Assembled, Left ..... **N/A**
9. Race, Inr, L Main Brg, Mach, 1.25"x1.65"x0.713 ..... **330-0154**
10. Washer,FW,Thrust,1.25" x 1.83" x .136" **320-0034**
11. Bushing, Wristpin, .928", Bronze **340-0024**
12. Race, Inr, R Main Brg, 1.25"x1.65"x0.872" **330-0700**
13. Retaining Ring, External, Pinion Bearing, 1.160" x 1.480" x .046", Carbon Steel, SAE 1060-1090 ..... **50-8057**

NOTE:

A rod set consists of two connecting rods and installed wristpin bushings (6 and 11). A connecting rod assembly includes two connecting rods with installed wristpin bushings (6 and 11), drive plug (2), thrust washers (3), crankpin (4) and bearing set (5)

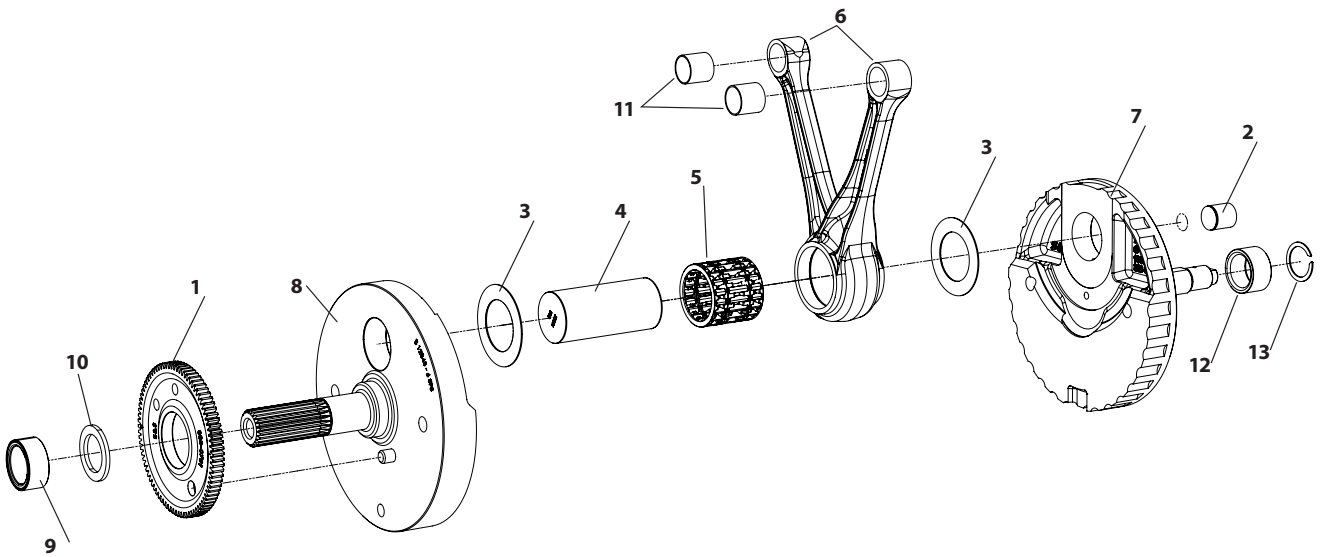

2007–2017 BIG TWINS

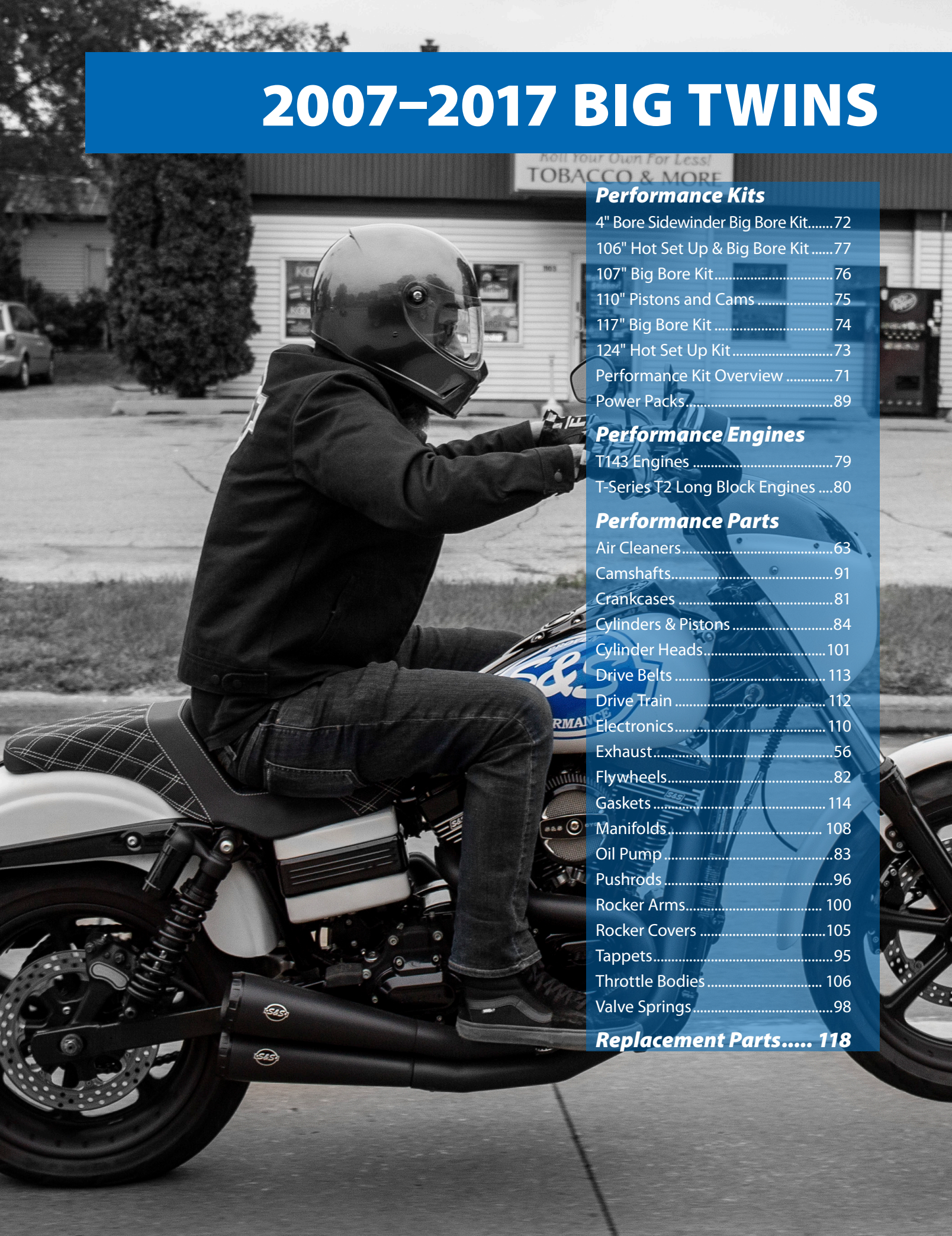

Performance Kits

4" Bore Sidewinder Big Bore Kit.....72
106" Hot Set Up & Big Bore Kit.....77
107" Big Bore Kit.....76
110" Pistons and Cams.....75
117" Big Bore Kit.....74
124" Hot Set Up Kit.....73
Performance Kit Overview.....71
Power Packs.....89

Performance Engines

T143 Engines.....79
T-Series T2 Long Block Engines.....80

Performance Parts

Air Cleaners.....63
Camshafts.....91
Crankcases.....81
Cylinders & Pistons.....84
Cylinder Heads.....101
Drive Belts.....113
Drive Train.....112
Electronics.....110
Exhaust.....56
Flywheels.....82
Gaskets.....114
Manifolds.....108
Oil Pump.....83
Pushrods.....96
Rocker Arms.....100
Rocker Covers.....105
Tappets.....95
Throttle Bodies.....106
Valve Springs.....98

Replacement Parts..... 118

SIDEWINDER® 2:1 EXHAUST
FOR 1995–'16 TOURING MODELS

CARB compliant
CARB EO K-010-3

- 2:1 styling for high-performance baggers
- High-flow cat *(550-0771A & 550-0772A)*
- Increased power and torque
- Available in show chrome or ceramic black finish
- Machined aluminum endcap
- Includes adapters that allow use of wide band or stock O2 sensors
- Stainless steel stepped header construction
- Some fitments 50-State Legal: CARB EO# K-010-3
- Removable dB reducer included
- Made in the USA!



SIDEWINDER® 2:1 EXHAUST SYSTEM FOR 2007–2016 FL MODELS — STREET LEGAL†

Finish	Part #
Chrome with Black Highlighted Machined Endcap	**550-0771A**
Black with Black Highlighted Machined Endcap	**550-0772A**

SIDEWINDER® 2:1 EXHAUST SYSTEM FOR 1995–'09 FL MODELS — 1995–'03, 2007 FL MODELS — CA EMISSIONS LEGAL††

Chrome with Black Highlighted Machined Endcap	**550-0776**
Black with Black Highlighted Machined Endcap	**550-0777**

†Exempt from emissions tampering regulations under CARB EO# K-010-3 for all 2007-2016 FL touring models

††DISCLAIMER: NOT LEGAL FOR SALE OR USE IN CALIFORNIA ON ANY POLLUTION CONTROLLED MOTOR VEHICLE. Not legal for sale or use on EPA pollution controlled vehicles originally equipped with catalyst.
*Qualified manufacturer declared emissions replacement part on FL touring models listed below.
California Models:
Fuel Injected Non-CVO FL Touring Model Years: 1995-2003 and 2007
CVO FL Touring Model Years: 2000-2003
49 State Models:
Fuel Injected Non-CVO FL Touring Model Years: 1995-2005 and 2007-2009
CVO FL Touring Model Years: 2000-2005
⚠WARNING: Cancer and Reproductive Harm – www.P65Warnings.ca.gov



REPLACEMENT PARTS: SEE PAGE 144

EL DORADO TOURING EXHAUST SYSTEM
MK45 MUFFLER/HEADER PACKAGE

FITMENT
- 2009–'16 touring models

FEATURES AND BENEFITS
- Improved power and torque
- Deep bass rumble throughout the RPM range
- Stainless steel header construction
- Includes adapters for OE or wide band O2 sensors
- O2 sensor location same as stock
- 50-state legal CARB EO# K-010
- SAE J2825 sound level compliant
- High Flow Cats increase exhaust flow for optimum torque
- Catalysts located in mufflers moves heat away from rider
- Show chrome or ceramic black finish
- Highlight Machined Thruster or Tracer endcaps
- Made in USA!



CARB compliant
CARB EO K-010


Black w/Thruster

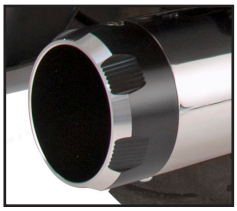
Chrome w/Thruster

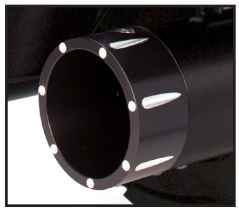
Black w/Tracer

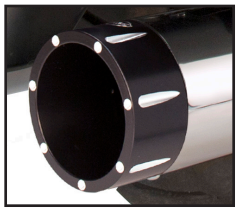
Chrome w/Tracer

EL DORADO EXHAUST SYSTEM FOR 2009–2016 TOURING MODELS — STREET LEGAL

Description/Finish	Endcap	Part #
Chrome	Highlight Machined Thruster	**550-0677A**
Chrome	Highlight Machined Tracer	**550-0678A**
Black	Highlight Machined Thruster	**550-0679A**
Black	Highlight Machined Tracer	**550-0680A**

Exempt from emissions tampering regulations under CARB EO# K-010 for all 2007-2016 FL touring models
⚠ WARNING: Cancer and Reproductive Harm – www.P65Warnings.ca.gov

SLASH CUT SLIP-ON MUFFLERS FOR DYNA® MODELS

FITMENT

- 1995–2009 Dyna® models with staggered exhaust
- 2008–'17 Dyna® models with 2-1-2 exhaust

FEATURES AND BENEFITS

- Up to 16% more horsepower and 10% more torque *(when used with Stealth Air Cleaner Kit)*
- Wake up your bike without breaking your budget
- Classic slash cut styling
- Show chrome or ceramic black finish
- SAE J2825 sound level compliant
- 50-state legal
- Removable dB reducer
- Made in USA!



Removable dB reducer



SLASH CUT MUFFLERS FOR 1995–2009 DYNA® MODELS WITH STAGGERED EXHAUST†

Finish	Part #
Chrome	**550-0718**
Black	**550-0720**

SLASH CUT MUFFLERS FOR 2008–2017 DYNA® MODELS WITH 2-1-2 EXHAUST††

Chrome	**550-0722**
Black	**550-0724**

†DISCLAIMER: NOT LEGAL FOR SALE OR USE IN CALIFORNIA ON ANY POLLUTION CONTROLLED MOTOR VEHICLES. Not legal for sale or use on EPA pollution controlled motorcycles originally equipped with mufflers containing catalyst.
*Qualified Manufacturer Declared Emissions Replacement Part on the Dyna Models Listed Below.
California Models: MY 2006-2007, Except CVO models
49 State Models: MY 1995-2009, Except CVO models

††DISCLAIMER: NOT LEGAL FOR SALE OR USE IN CALIFORNIA ON ANY POLLUTION CONTROLLED MOTOR VEHICLES. Not legal for sale or use on EPA pollution controlled motorcycles originally equipped with mufflers containing catalyst.
*Qualified Manufacturer Declared Emissions Replacement Part on the Dyna Models Listed Below.
California Models: Fat Bob MY 2008, 2010-2017; Wide Glide MY 2010-2017; Low Rider S MY 2017
49 State Models: Fat Bob MY 2008-2017; Wide Glide MY 2010-2017; Low Rider S MY 2017
⚠WARNING: Cancer and Reproductive Harm – www.P65Warnings.ca.gov

REPLACEMENT PARTS: SEE PAGE 140

GRAND NATIONAL® SLIP-ON MUFFLERS
FOR DYNA® MODELS

FITMENT
- 1995–2009 Dyna® models with staggered exhaust
- 2008–'17 Dyna® models with 2-1-2 exhaust

FEATURES AND BENEFITS
- Up to 17% more horsepower and 9% more torque *(when used with Stealth Air Cleaner Kit)*
- Race inspired Grand National endcaps
- Show chrome or ceramic black finish
- Deep performance rumble
- SAE J2825 sound level compliant
- 50-state legal
- Removable dB reducer
- Made in USA!


Removable dB reducer



GRAND NATIONAL® MUFFLERS FOR 1995–2009 DYNA® MODELS WITH STAGGERED EXHAUST†

Finish	Part #
Chrome	**550-0719**
Black	**550-0721**

GRAND NATIONAL MUFFLERS FOR 2008–2017 DYNA® MODELS WITH 2-1-2 EXHAUST††

Chrome	**550-0723**
Black	**550-0725**

†DISCLAIMER: NOT LEGAL FOR SALE OR USE IN CALIFORNIA ON ANY POLLUTION CONTROLLED MOTOR VEHICLES. Not legal for sale or use on EPA pollution controlled motorcycles originally equipped with mufflers containing catalyst.
*Qualified Manufacturer Declared Emissions Replacement Part on the Dyna Models Listed Below.
California Models: MY 2006-2007, Except CVO models
49 State Models: MY 1995-2009, Except CVO models

††DISCLAIMER: NOT LEGAL FOR SALE OR USE IN CALIFORNIA ON ANY POLLUTION CONTROLLED MOTOR VEHICLES. Not legal for sale or use on EPA pollution controlled motorcycles originally equipped with mufflers containing catalyst.
*Qualified Manufacturer Declared Emissions Replacement Part on the Dyna Models Listed Below.
California Models: Fat Bob MY 2008, 2010-2017; Wide Glide MY 2010-2017; Low Rider S MY 2017
49 State Models: Fat Bob MY 2008-2017; Wide Glide MY 2010-2017; Low Rider S MY 2017
⚠WARNING: Cancer and Reproductive Harm – www.P65Warnings.ca.gov

REPLACEMENT PARTS: SEE PAGE 141

Mk45 TOURING MUFFLERS

Mk45 4.5" Touring Mufflers are the result of decades of riding, racing and tuning. Combining both a stainless steel baffle and fiberglass packing, they create a deep rumble and improved horsepower and torque, all while adding a unique look with styled aluminum endcaps.



FITMENT

- 1995–2016 touring models

FEATURES AND BENEFITS

- 7 horsepower gain*
- Bold 4.5" design — with stainless steel baffle and RaceTEX cartridge packing
- Available in show quality chrome or ceramic black finish
- Choose from S&S® Thruster or Tracer end-cap designs in chrome or black
- SAE J2825 sound level compliant
- 50-state legal
- Removable dB reducer
- Made in USA!

**Tested with S&S Power Tune® Dual Header and Stealth Air Cleaner Kit*

Mk45 4.5" TOURING MUFFLERS W/ENDCAPS

Muffler Body Finish	Endcap Finish & Style	Part #
Chrome	Chrome Thruster	**550-0620**
	Black Highlight Machined Thruster	**550-0619**
	Chrome Tracer	**550-0624**
	Black Highlight Machined Tracer	**550-0623**
Ceramic black	Chrome Thruster	**550-0622**
	Black Highlight Machined Thruster	**550-0621**
	Chrome Tracer	**550-0626**
	Black Highlight Machined Tracer	**550-0625**

DISCLAIMER: NOT LEGAL FOR SALE OR USE IN CALIFORNIA ON ANY POLLUTION CONTROLLED MOTOR VEHICLES. Not legal for sale or use on EPA pollution controlled motorcycles originally equipped with mufflers containing catalyst.

*Qualified manufacturer declared emissions replacement part on the FL touring models listed below.

California FL Touring Models:
Fuel Injected MY 1995-2003, 2007, and 2009-2016
CVO MY 2000-2003, and 2009-2016
49 State FL touring Models:
Carbureted MY 1995-2005
Fuel Injected MY 1995-2005, 2007-2016
CVO MY 2000-2005, and 2009-2016

⚠ WARNING: Cancer and Reproductive Harm – www.P65Warnings.ca.gov



Removable dB reducer

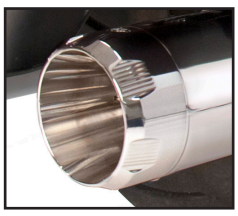

550-0620

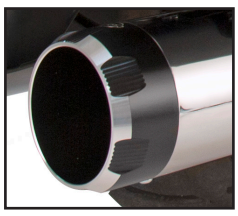

550-0619

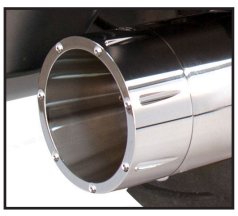

550-0624



550-0623



550-0622



550-0621



550-0626

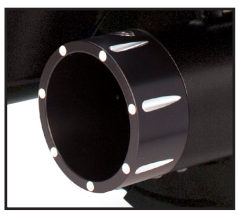

550-0625

REPLACEMENT PARTS: SEE PAGE 142

SLASH CUT 4" SLIP-ON MUFFLERS



FITMENT

- 1995–2016 Harley-Davidson® touring models with non-catalyst mufflers
- 2009–'20 trike models

FEATURES AND BENEFITS

- Show quality chrome or ceramic black finish
- Economical price
- High flow baffle
- Aggressive sound & excellent HP
- Excellent clearance on trike models
- SAE J2825 sound level compliant
- Removable dB reducer
- Made in USA!





Removable dB reducer

SLASH CUT 4" TOURING MUFFLERS FOR 1995–2016 BIG TWINS AND 2009–'20 TRIKE MODELS

Finish	Part #
Chrome	**550-0691**
Black	**550-0692**

DISCLAIMER: NOT LEGAL FOR SALE OR USE IN CALIFORNIA ON ANY POLLUTION CONTROLLED MOTOR VEHICLES. Not legal for sale or use on EPA pollution controlled motorcycles originally equipped with mufflers containing catalyst.

*Qualified manufacturer declared emissions replacement part on the FL touring models listed below.

California FL Touring Models:
Fuel Injected MY 1995-2003, 2007, and 2009-2016
CVO MY 2000-2003, and 2009-2016
49 State FL touring Models:
Carbureted MY 1995-2005
Fuel Injected MY 1995-2005, 2007-2016
CVO MY 2000-2005, and 2009-2016

⚠ WARNING: Cancer and Reproductive Harm – www.P65Warnings.ca.gov

REPLACEMENT PARTS: SEE PAGE 143

GRAND NATIONAL® 4" SLIP-ON MUFFLERS

FITMENT

- 1995–2016 Harley-Davidson® touring models with non-catalyst mufflers *(except 2010 Road Glide® and Street Glide® using OEM 2:1 Header)*
- 2009–'20 trike models

FEATURES AND BENEFITS

- Show quality chrome or ceramic black finish
- Race inspired Grand National endcap
- High flow baffle
- Aggressive sound & excellent HP
- SAE J2825 sound level compliant
- 50-state legal on most models
- Removable dB reducer
- Made in USA!



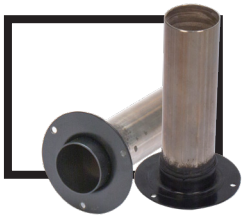

Removable dB reducer



Grand National

GRAND NATIONAL® 4" MUFFLERS FOR 1995–2016 BIG TWINS AND 2009–'20 TRIKE MODELS

Finish	Part #
Chrome	**550-0689**
Black	**550-0690**

DISCLAIMER: NOT LEGAL FOR SALE OR USE IN CALIFORNIA ON ANY POLLUTION CONTROLLED MOTOR VEHICLES. Not legal for sale or use on EPA pollution controlled motorcycles originally equipped with mufflers containing catalyst.

*Qualified manufacturer declared emissions replacement part on the FL touring models listed below.

California FL Touring Models:
Fuel Injected MY 1995-2003, 2007, and 2009-2016
CVO MY 2000-2003, and 2009-2016
49 State FL touring Models:
Carbureted MY 1995-2005
Fuel Injected MY 1995-2005, 2007-2016
CVO MY 2000-2005, and 2009-2016

⚠WARNING: Cancer and Reproductive Harm – www.P65Warnings.ca.gov

REPLACEMENT PARTS: SEE PAGE 143

GRAND NATIONAL® 2 INTO 2 EXHAUST SYSTEM
FOR DYNA® MODELS



FITMENT
- 2006–2017 Dyna® models

FEATURES AND BENEFITS
- 2:2 Free-flow design equals solid HP gains
- Hidden crossover provides performance benefits of 2:1
- Full heat shields on both front and rear headers
- Stainless steel header construction
- Race inspired Grand National endcap
- Available in chrome or ceramic black finish
- Oxygen sensor ports allow use of wide band or stock O2 sensors.
- Right side passenger peg relocation bracket available *(part #550-0801 for $69.95)*
- SAE J2825 sound level compliant
- Removable dB reducers
- Made in USA!

GRAND NATIONAL® 2:2 EXHAUST SYSTEM FOR 2006–2007 DYNA® MODELS

Finish	Part #
Chrome	**550-0743**
Black	**550-0742**

GRAND NATIONAL® 2:2 EXHAUST SYSTEM FOR 2008–2017 DYNA® MODELS — RACE ONLY

Chrome	**550-0743**
Black	**550-0742**

DISCLAIMER: NOT LEGAL FOR SALE OR USE IN CALIFORNIA ON ANY POLLUTION CONTROLLED MOTOR VEHICLES. NOT LEGAL FOR SALE OR USE ON EPA POLLUTION CONTROLLED MOTORCYCLES ORIGINALLY EQUIPPED WITH CATALYST.
*QUALIFIED MANUFACTURER DECLARED EMISSIONS REPLACEMENT PART ON THE DYNA MODELS LISTED BELOW.
CALIFORNIA MODELS: MY 2006-2007, EXCEPT CVO MODELS
49 STATE MODELS: MY 2006-2009, EXCEPT CVO MODELS
⚠WARNING: Cancer and Reproductive Harm – www.P65Warnings.ca.gov



REPLACEMENT PARTS: SEE PAGE 145

POWER TUNE® DUAL HEADERS

FITMENT

- Non-catalyst equipped Harley-Davidson® touring models‡
- Harley-Davidson® Tri Glide® & Freewheeler® models††

FEATURES AND BENEFITS

- Adds up to 8 horsepower over stock header pipes
- Independent dual look with hidden crossover
- Exclusive design moves the rear cylinder header away from the passenger to reduce radiated heat
- Full chrome or ceramic black heat shielding with 220º coverage
- Updated styling to give the bike a modern look
- Oxygen sensor bungs†
- Spherical inlet design for improved sealing and exhaust gasket durability
- Hardware included to mount crossover pipe
- Exhaust port gaskets included
- All hardware included
- Made in USA!



550-0003A



550-0142A

NOTES

Fuel injection tuning is not required with this product but is highly recommended for best results.

Power Tune® Dual Headers can be used on 1993–'94 models if 1995–up mufflers are used.

2010 Road Glide® and Street Glide® using OEM 2:1 Header require 1 of each HD® part 65723-85 mounting bracket and 65724-85A rubber mount for left side muffler mounting.

POWER TUNE® DUAL HEADERS

Fitment	Finish	Part #
1995–'08† big twins	Chrome	**550-0003A****
	Black	**550-0142A****
2009–'16 non-catalyst equipped touring and 2009–'20 Tri Glide†† & Freewheeler models	Chrome	**550-0004B*****
	Black	**550-0143B*****

†Has 18mm sensor fittings in the stock locations for 2007-'08 bikes. If not equipped with oxygen sensors, the ports can be used for tuning. Plugs are included if ports are not used.

††Requires the Trike Adaptor Kit. See chart below.

**DISCLAIMER: NOT LEGAL FOR SALE OR USE IN CALIFORNIA ON ANY POLLUTION CONTROLLED MOTOR VEHICLE. Not legal for sale or use on EPA pollution controlled vehicles originally equipped with catalyst.

*Qualified manufacturer declared emissions replacement part on FL touring models listed below.

California Models:
FL Touring Fuel Injected MY 1995-2003, and 2007
CVO FL Touring MY 2000-2003
49 State Models:
FL Touring Carbureted MY 1995-2005
FL Touring Fuel Injected MY 1995-2005 and 2007-2008
CVO FL Touring MY 2000-2005

***DISCLAIMER: NOT LEGAL FOR SALE OR USE IN CALIFORNIA ON ANY POLLUTION CONTROLLED MOTOR VEHICLE. Not legal for sale or use on EPA pollution controlled motorcycles originally equipped with a catalyst exhaust

*Qualified Manufacturer Declared Emissions Compliant Part for 2009 Harley-Davidson 49-State Non-CVO FL Touring Models Only

⚠WARNING: Cancer and Reproductive Harm – www.P65Warnings.ca.gov



††TRIKE ADAPTOR KIT

Fitment	Finish	Part #
2009, 2014–'20 Tri Glide®& Freewheeler ® models	Chrome	**550-0799**

⚠WARNING: Cancer and Reproductive Harm – www.P65Warnings.ca.gov

REPLACEMENT PARTS: SEE PAGE 146

SPECIAL NOTES

It may be necessary to re-jet the carburetor or recalibrate the fuel injection system for best performance when a change is made in the exhaust system.

Dyno results are from tests performed at the S&S® Research and Development facility in Viola, Wisconsin.

NEW FOR 2020 FROM S&S CYCLE

STEALTH TRIBUTE AIR CLEANER KITS

CLASSIC DESIGN — STEALTH FITMENT

Conceived by S&S founder and brought to market by his son George B. Smith, the Classic Two Throat carb and matched air cleaner served as a performance milestone in the v-twin space for over a decade. Inspired by the unique style of our Two Throat intake, S&S has created the new "Tribute" air cleaner cover and wrapped it around our proven Stealth filter system creating a classic look combined with modern performance.



COVERS *ONLY*

Chrome	**170-0592**
Gloss Black	**170-0593**

STEALTH TRIBUTE COVER AIR CLEANER KITS

Fitment	Finish	Part #
2008–'16 Touring & 2016–'17 Softail Models* *(except Tri-Glide® & CVO™ Models)*	Chrome±	**170-0594**
	Gloss Black	**170-0597**
2001–'17 big twin** *(except Throttle by Wire)*	Chrome±	**170-0596**
	Gloss Black	**170-0599**

*Kit includes Stealth Air Cleaner 170-0301B which is exempt from emissions tampering regulations under CARB EO# D-355-27

**Kit includes Stealth Air Cleaner 170-0300B which is exempt from emissions tampering regulations under CARB EO# D-355-27

± ⚠ WARNING: Cancer and Reproductive Harm – www.P65Warnings.ca.gov

CARB compliant EO #D-355-27



STEALTH AIR CLEANER KITS

NEW STEALTH TRIBUTE KITS
SEE PAGE 63

CARB compliant EO #D-355-27

- 1999–'17 big twins *(except 2017 touring models)*
- Air directional stinger cone in the filter
- Pre-filters are available — See page 70
- Use with any of several S&S designed covers — See page 67
- High flow (1" taller) filter kit available — See page 70
- Backplate adaptor for Rushmore covers also available—See page 70



STEALTH TEARDROP AIR CLEANER KIT

EXEMPT FROM EMISSIONS TAMPERING REGULATIONS UNDER CARB EO# D-355-27 FOR ALL FUEL INJECTED MODELS

Application	Fuel System	Finish	Part #
2001–'17 big twin *(except 2017 touring models & Throttle by Wire)* *Includes Stealth AC Kit 170-0300B*	Stock EFI, Delphi® EFI	Chrome	**170-0528**±
		Gloss Black	**170-0529**
2008–'16 touring,'16–'17 Softail®*(except Tri-Glide® & CVO® Models)* *Includes Stealth AC Kit 170-0301B*	Throttle by Wire	Chrome	**170-0522**±
		Gloss Black	**170-0523**

± ⚠ WARNING: Cancer and Reproductive Harm – www.P65Warnings.ca.gov



CARBON FIBER TEARDROP KIT

EXEMPT FROM EMISSIONS TAMPERING REGULATIONS UNDER CARB EO# D-355-27 FOR ALL FUEL INJECTED MODELS

Application	Part #
2001–'17 big twin *(except Throttle by Wire)*	**170-0499**
2008–'16 touring models and 2016–'17 Softail® models	**170-0500**



MINI TEARDROP AIR CLEANER KIT

EXEMPT FROM EMISSIONS TAMPERING REGULATIONS UNDER CARB EO# D-355-27 FOR ALL FUEL INJECTED MODELS

Application	Fuel System	Finish	Part #
2001–'17 big twin *(except 2017 touring models & Throttle by Wire)* *Includes Stealth AC Kit 170-0300B*	Stock EFI, Delphi® EFI	Chrome	**170-0441**±
		Gloss Black	**170-0442**
2008–'16 touring,'16–'17 ST®*(except Tri-Glide® & CVO® Models)* *Includes Stealth AC Kit 170-0301B*	Throttle by Wire	Chrome	**170-0437**±
		Gloss Black	**170-0438**

± ⚠ WARNING: Cancer and Reproductive Harm – www.P65Warnings.ca.gov



AIR 1 AIR CLEANER KIT

EXEMPT FROM EMISSIONS TAMPERING REGULATIONS UNDER CARB EO# D-355-27 FOR ALL FUEL INJECTED MODELS

Application	Fuel System	Part #
2001–'17 big twin *(except 2017 touring models & Throttle By Wire) Includes Stealth AC Kit 170-0300B*	Stock EFI Delphi®	**170-0478**
2008–'17 big twin *(except 2017 touring models, Tri Glide® & CVO® Models) Includes Stealth AC Kit 170-0301B*	Throttle By Wire	**170-0485**



TRI-SPOKE AIR CLEANER KIT

EXEMPT FROM EMISSIONS TAMPERING REGULATIONS UNDER CARB EO# D-355-27 FOR ALL FUEL INJECTED MODELS

Application	Fuel System	Part #
2001–'17 big twin *(except 2017 touring models & Throttle By Wire) Includes Stealth AC Kit 170-0300B*	Stock EFI Delphi®	**170-0476**
2008–'17 big twin *(except 2017 touring models, Tri-Glide® & CVO® Models) Includes Stealth AC Kit 170-0301B*	Throttle By Wire	**170-0483**



TORKER AIR CLEANER KIT

EXEMPT FROM EMISSIONS TAMPERING REGULATIONS UNDER CARB EO# D-355-27 FOR ALL FUEL INJECTED MODELS

Application	Fuel System	Part #
2001–'17 big twin *(except 2017 touring models & Throttle By Wire) Includes Stealth AC Kit 170-0300B*	Stock EFI Delphi®	**170-0477**
2008–'17 big twin *(except 2017 touring models, Tri-Glide® & CVO® Models) Includes Stealth AC Kit 170-0301B*	Throttle By Wire	**170-0484**

CON'T NEXT PAGE

CON'T STEALTH AIR CLEANER KITS



AIRSTREAM AIR CLEANER KIT EXEMPT FROM EMISSIONS TAMPERING REGULATIONS UNDER CARB EO# D-355-27 FOR ALL FUEL INJECTED MODELS

Application	Fuel System	Finish	Part #
2001–'17 big twin *(except 2017 touring models & Throttle By Wire) Includes Stealth AC Kit 170-0300B*	Stock EFI Delphi®	Chrome	**170-0479±**
		Gloss Black	**170-0480**
2008–'17 big twin *(except 2017 touring models, Tri-Glide® & CVO® Models) Includes Stealth AC Kit 170-0301B*	Throttle By Wire	Chrome	**170-0486±**
		Gloss Black	**170-0487**

± ⚠ WARNING: Cancer and Reproductive Harm – www.P65Warnings.ca.gov



MUSCLE AIR CLEANER KIT EXEMPT FROM EMISSIONS TAMPERING REGULATIONS UNDER CARB EO# D-355-27 FOR ALL FUEL INJECTED MODELS

Application	Fuel System	Finish	Part #
2001–'17 big twin *(except 2017 touring models & Throttle By Wire) Includes Stealth AC Kit 170-0300B*	Stock EFI Delphi®	Chrome	**170-0481±**
		Gloss Black	**170-0482**
2008–'17 big twin *(except 2017 touring models, Tri-Glide® & CVO® Models) Includes Stealth AC Kit 170-0301B*	Throttle By Wire	Chrome	**170-0488±**
		Gloss Black	**170-0489**

± ⚠ WARNING: Cancer and Reproductive Harm – www.P65Warnings.ca.gov



STEALTH AIR CLEANER KITS — NO COVER

EXEMPT FROM EMISSIONS TAMPERING REGULATIONS UNDER CARB EO# D-355-27 FOR ALL FUEL INJECTED MODELS

Application	Fuel System	Part #
2001–'17 big twin *(except 2017 touring models & Throttle By Wire)*	Stock EFI Delphi®	**170-0300B**
2008–'17 big twin *(except 2017 touring models, Tri-Glide® & CVO® Models)*	Throttle By Wire	**170-0301B**

REPLACEMENT PARTS: SEE PAGE 133

NOTE Fuel injection tuning is not required for this product.



CHROME AIRSTREAM AIR CLEANER KITS

Application	Fuel System	Part #
1999–2017 big twins *(except '99 Softail® carb & Throttle by Wire)*	Stock CV/EFI Delphi®	**170-0056**
2008–2017 big twins *(except 2017 touring models)*	Throttle by Wire	**170-0054**

DISCLAIMER: NOT LEGAL FOR SALE OR USE IN CALIFORNIA ON ANY POLLUTION CONTROLLED MOTOR VEHICLE.
NOT LEGAL FOR SALE OR USE NATIONWIDE ON ANY FEDERAL POLLUTION CONTROLLED MOTOR VEHICLE UNDER THE CLEAN AIR ACT
⚠ WARNING: Cancer and Reproductive Harm – www.P65Warnings.ca.gov

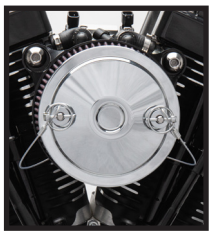

CHROME MUSCLE AIR CLEANER KITS

Application	Fuel System	Part #
1999–2017 big twins *(except '99 Softail® carb & Throttle by Wire)*	Stock CV/EFI Delphi®	**170-0106**
2008–2017 big twins *(except 2017 touring models)*	Throttle by Wire	**170-0099**

DISCLAIMER: NOT LEGAL FOR SALE OR USE IN CALIFORNIA ON ANY POLLUTION CONTROLLED MOTOR VEHICLE.
NOT LEGAL FOR SALE OR USE NATIONWIDE ON ANY FEDERAL POLLUTION CONTROLLED MOTOR VEHICLE UNDER THE CLEAN AIR ACT
⚠ WARNING: Cancer and Reproductive Harm – www.P65Warnings.ca.gov



STEALTH AIR CLEANER KITS* — *NO COVER*

Application	Fuel System	Part #
1999–2017 big twins *(except '99 Softail® carb & Throttle by Wire)*	Stock CV/EFI Delphi®	**170-0060**
2008–2017 big twins *(except 2017 touring models)*	Throttle by Wire	**170-0061**

**These kits do not contain covers – Choose an S&S cover or use your stock Twin Cam 88®, 96™ or 103™ cover*
DISCLAIMER: NOT LEGAL FOR SALE OR USE IN CALIFORNIA ON ANY POLLUTION CONTROLLED MOTOR VEHICLE.
NOT LEGAL FOR SALE OR USE NATIONWIDE ON ANY FEDERAL POLLUTION CONTROLLED MOTOR VEHICLE UNDER THE CLEAN AIR ACT

STEALTH AIR CLEANER KITS FOR S&S ENGINES

STEALTH AIR CLEANER KITS FOR S&S ENGINES

Fitment	Fuel System	Part #
2003–'17 HD® Models *(except '17 touring models)*	S&S 66mm Throttle Hog	**170-0165**
2003–'17 HD® Models *(except '17 touring models)*	S&S 58mm Throttle Hog	**170-0164**
1995–1999 S&S Super Stock Engines	S&S Single Bore VFI 52mm Throttle Bodies	**170-0287**
1995–1999 EFI big twin models	S&S Single Bore VFI 58mm Throttle Bodies	**170-0283**
1999–2017 EFI big twin models	S&S Single Bore VFI 58mm Throttle Bodies	**170-0284**
T124 1999–'06 big twin models *(except '06 Dyna® models) (Engines produced after 2013)*	S&S E or G Carburetor	**170-0058**
T124 1999–'06 big twin models *(except '06 Dyna® models) (Engines produced after 2013)*	Stock CV/EFI Delphi®	**170-0060**
T111 1999–'06 big twin models *(except '06 Dyna® models) (Engines produced after 2013)*	S&S E or G Carburetor	**170-0058**
T111 1999–'06 big twin models *(except '06 Dyna® models) (Engines produced after 2013)*	Stock CV/EFI Delphi®	**170-0060**

DISCLAIMER: NOT LEGAL FOR SALE OR USE IN CALIFORNIA ON ANY POLLUTION CONTROLLED MOTOR VEHICLE. NOT LEGAL FOR SALE OR USE NATIONWIDE ON ANY FEDERAL POLLUTION CONTROLLED MOTOR VEHICLE UNDER THE CLEAN AIR ACT

EC STEALTH AIR CLEANER KITS

EC Type Approved

- 110" Harley-Davidson® Dyna® & Softail® Models up to 2017 *(e9 11002G)*
- 103" Harley-Davidson Dyna & Softail Models up to 2017 *(e9 11003G)*



EC STEALTH AC KITS

Cable Throttle Body 103" HD® Dyna® & Softail® models up to 2017	**170-0331**
Throttle by Wire 103" HD Dyna® & Softail models up to 2017	**170-0332**
Cable Throttle Body 110" HD Dyna & Softail models up to 2017	**170-0333**
Throttle by Wire 110" HD Dyna & Softail models up to 2017	**170-0334**

STEALTH AIR CLEANER KIT COVERS

NEW STEALTH TRIBUTE COVERS SEE PAGE 63


Carbon Fiber


Mini in Chrome


Mini in Gloss Black


Tri-Spoke


Torker


Air 1


Airstream in Chrome


Airstream in Gloss Black


Muscle in Chrome


Muscle in Gloss Black



111



124



143

STEALTH COVERS

Teardrop		Teardrop—Slasher		Carbon Fiber	Mini		Tri-Spoke	Torker	Air 1
Chrome	Gloss Black	Chrome	Gloss Black	Black	Chrome	Gloss Black	Gloss Black w/Highlights	Gloss Black w/Highlights	Gloss Black w/Highlights
170-0530	170-0531	170-0532	170-0533	170-0501	170-0367	170-0366	170-0210	170-0206	170-0214

Airstream		Muscle		Displacement		
Chrome	Gloss Black	Chrome	Gloss Black with Highlighted Logo	111	124	143
170-0118	170-0396	170-0121	170-0463	170-0319	170-0321	170-0323

⚠WARNING: Cancer and Reproductive Harm – www.P65Warnings.ca.gov

SINGLE BORE TUNED INDUCTION SYSTEM

FITMENT

- 2007–'17 big twin models including Harley-Davidson® Tri Glide® models *(except 2007–'08 FXDWG & 2009 FXDC/FXDF and 2017 touring models)*

FEATURES AND BENEFITS

- Bolt-on performance—over twice the filtering area over stock intake system
- Increases horsepower and torque across the rpm range using air column inertia and carefully timed gas dynamic pressure waves
- Smooth intake tract of carefully selected tuned lengths increases performance
- High flow washable and reusable cotton media provides performance, protection, and economy
- Available in wrinkle black, chrome, or natural

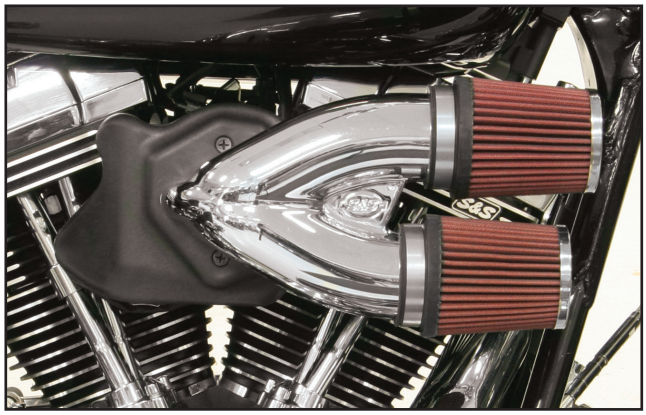

CARB compliant EO #D-355-27

SINGLE BORE TUNED INDUCTION SYSTEM KITS

EXEMPT FROM EMISSIONS TAMPERING REGULATIONS UNDER CARB EO# D-355-27 FOR ALL FUEL INJECTED MODELS

Fitment	Fuel System	Finish	Part #
2001–'17 Harley-Davidson® big twin *(except Throttle By Wire and CVO® Models)*	Stock EFI Delphi®	Chrome/Red Filters	**170-0308B**
2008–'16 HD® touring and '16 & '17 Softail® *(except Tri-Glide® & CVO® Models)*	Throttle By Wire	Gloss Black/Red Filters	**170-0309B**
		Chrome/Red Filters	**170-0310B**

⚠WARNING: Cancer and Reproductive Harm – www.P65Warnings.ca.gov

SINGLE BORE TUNED INDUCTION SYSTEM KITS±

Fitment	Fuel Delivery	Finish	Part #
2007–2017 big twins *(except 2017 touring models)*	S&S Single Bore EFI	Chrome/Red Filters	**170-0085**
2007–2017 big twins *(except 2017 touring models)*	EFI Delphi®	Chrome/Red Filters	**170-0087**
2008–2017 big twins *(except 2017 touring models)*	Throttle By Wire	Gloss Black/Red Filters	**170-0457**
		Chrome/Red Filters	**106-2448**
CTO	Specify	Specify	**106-5337***

Use the Configure to Order (CTO) part number to order different finish and filter color.

DISCLAIMER: NOT LEGAL FOR SALE OR USE IN CALIFORNIA ON ANY POLLUTION CONTROLLED MOTOR VEHICLE. NOT LEGAL FOR SALE OR USE NATIONWIDE ON ANY FEDERAL POLLUTION CONTROLLED MOTOR VEHICLE UNDER THE CLEAN AIR ACT

±⚠WARNING: Cancer and Reproductive Harm – www.P65Warnings.ca.gov



Molded black adaptor bracket for 2008–'16 touring models

Chrome billet adaptor bracket for 2007–'17 big twins,except touring



REPLACEMENT PARTS: SEE PAGE 134 & PAGE 135

NOTES

Does not fit Screamin' Eagle 58mm or 64mm throttle bodies, or S&S 58mm or 66mm Throttle Hogs.

Single bore tuned induction will not fit on motorcycles equipped with fairing lower glove boxes.

Fuel injection tuning is not required with this product but is highly recommended for best results.

CLASSIC TEARDROP AIR CLEANER KIT



FITMENT
- 2007–'17 big twin models including Harley-Davidson® Tri Glide® models *(except 2017 touring models)*

FEATURES AND BENEFITS
- Efficient and free flowing intake that can add two to five horsepower
- Uniquely designed back plate has air horn style radiused entryway to reduce turbulence
- Dimpled cover with directional air cone on inside creates smooth path for air
- Great addition to performance exhaust or cams

KIT CONTENTS
- Filter
- Backing plate and cover
- All mounting hardware
- Instructions

CARB compliant EO #D-355-27

CLASSIC TEARDROP AIR CLEANER KITS FOR STOCK EFI

EXEMPT FROM EMISSIONS TAMPERING REGULATIONS UNDER CARB EO# D-355-27 FOR ALL FUEL INJECTED MODELS

Fitment	Fuel System	Finish	Stock EFI, W/ 96 & 103 Engines
2001–'17 HD® big twin models *(except Throttle By Wire and CVO® Models)*	Stock EFI Delphi®	Chrome	**170-0303B**±
		Gloss Black	**170-0304B**
2008–'16 HD® touring stock-bore and '16 & '17 Softail® models *(except Tri-Glide® & CVO® Models)*	Throttle By Wire	Chrome	**170-0305B**±
		Gloss Black	**170-0312B**

± WARNING: Cancer and Reproductive Harm – www.P65Warnings.ca.gov

CLASSIC TEARDROP AIR CLEANER KITS FOR STOCK CARB/EFI

Fitment	Finish	Stock EFI, With 110 Engines
2008–2017 big twins *(except 2017 touring)*	Chrome	**106-2091**±
2007–'10 Softail® CVO® Models *(& 1993–'06 HD® carbureted big twins)*	Chrome	**17-0450**±
	Gloss Black	**170-0181A**

DISCLAIMER: NOT LEGAL FOR SALE OR USE IN CALIFORNIA ON ANY POLLUTION CONTROLLED MOTOR VEHICLE. NOT LEGAL FOR SALE OR USE NATIONWIDE ON ANY FEDERAL POLLUTION CONTROLLED MOTOR VEHICLE UNDER THE CLEAN AIR ACT

± WARNING: Cancer and Reproductive Harm – www.P65Warnings.ca.gov

CLASSIC TEARDROP AIR CLEANER KITS FOR S&S SINGLE BORE EFI THROTTLE BODIES

Fitment	Finish	52mm	58mm
Stock Harley-Davidson® heads, S&S T-Series Long block engines or S&S Heads for stock breathing system	Chrome	**17-0498**	**106-4669**
S&S Heads for 4⅛" bore engines with vacuum breathing	Chrome	–	**106-4668**

DISCLAIMER: NOT LEGAL FOR SALE OR USE IN CALIFORNIA ON ANY POLLUTION CONTROLLED MOTOR VEHICLE. NOT LEGAL FOR SALE OR USE NATIONWIDE ON ANY FEDERAL POLLUTION CONTROLLED MOTOR VEHICLE UNDER THE CLEAN AIR ACT

WARNING: Cancer and Reproductive Harm – www.P65Warnings.ca.gov

NOTE Fuel injection tuning is not required with this product but is highly recommended for best results.

REPLACEMENT PARTS: PAGE 136



CLASSIC TEARDROP AIR CLEANER COVERS

Style	Finish	Part #
Classic Teardrop	Chrome	**17-0378**±
	Gloss Black	**170-0384A**
Slasher Teardrop	Chrome	**17-0004**±
	Gloss Black	**170-0419**
Nostalgic Teardrop	Polished	**17-0071**

± WARNING: Cancer and Reproductive Harm – www.P65Warnings.ca.gov

STEALTH BACKPLATE ADAPTOR
FOR RUSHMORE COVER FOR 2014–2016 TOURING MODELS

S&S Stealth air cleaners allow owners of 1999–later big twins to use their stock air cleaner cover to hide a performance air cleaner. The new adaptor kit for Rushmore Models allows late model bagger owners to fly under the radar too.



FITMENT
- 2014-2016 touring models

STEALTH BACKPLATE ADAPTOR FOR RUSHMORE COVER

Fitment	Part #
2014–2016 touring models	**170-0261**

PRE-FILTERS

FITMENT
- S&S® Stealth Air Filters

FEATURES AND BENEFITS
- Water resistant
- Prevents large debris from prematurely clogging filter
- Washable Nylon
- Promotes longer filter life
- Reduces the risk of water entering air intake system



170-0197

PRE-FILTERS

Application	Part #
Standard	**170-0193**
1" Tall	**170-0197**

HIGH FLOW AIR FILTER KITS

FITMENT
- S&S Classic Teardrop air cleaners for Super E & G carbs and S&S EFI throttle bodies

FEATURES AND BENEFITS
- Low restriction filter element comes pre-oiled for true plug and play installation
- 1" wider filtration area provides up to 37% more airflow over standard S&S filters
- Resulting band of exposed filter material imparts a high performance look

KIT CONTENTS
- Wide filter
- Filter spacers





17-0045

HIGH FLOW AIR FILTERS

Description	Fitment	Part #
High Flow Air Filter Kit *(includes spacers)*	Classic Teardrop	**17-0045**
	Stealth, 1" Taller	**170-0127***
1" Taller Filter Only	Classic Teardrop	**106-4724**
	Stealth	**170-0154**
Spacer	Classic Teardrop & Stealth, 1" Taller	**50-5009-S**

*DISCLAIMER: NOT LEGAL FOR SALE OR USE IN CALIFORNIA ON ANY POLLUTION CONTROLLED MOTOR VEHICLE. NOT LEGAL FOR SALE OR USE NATIONWIDE ON ANY FEDERAL POLLUTION CONTROLLED MOTOR VEHICLE UNDER THE CLEAN AIR ACT

STANDARD REPLACEMENT FILTERS

STANDARD REPLACEMENT AIR FILTERS

Description	Fitment	Part #
Standard Filter Only	Classic Teardrop	**106-4722**
	Stealth	**170-0126**

PERFORMANCE KIT OVERVIEW
FOR HARLEY-DAVIDSON® TWIN CAM 96™ AND 103™



4" BORE BOLT-IN SIDEWINDER® BIG BORE KIT
S&S 4" big bore cylinder and piston kits boost 88 and 96/103" Harley-Davidson® big twin engines to 100" and 110" respectively. These bolt-in kits don't require any machining, rebalancing or engine removal, and include just about everything you'll need to complete the installation. The biggest cylinder bore that can be installed in a stock crankcase without machining! See page 72



124" HOT SET UP KIT
Ready for the ultimate? The 124" HSU kit will take you to the limit increasing both your bore and stroke. The included flywheel increases the stroke from 4 ⅜" to 4 ⅝". The kit's cylinders open the stock 3 ¾" bore to 4 ⅛". S&S Easy Start 640 gear drive camshafts are included! Kits are available for balanced and unbalanced engines. CTO allows you to select other camshaft and cylinder head options to build the ultimate kit of your dreams. Your crankcase will require machining for these cylinder spigots to fit. Fuel injection tuning required. See page 73



117" BIG BORE KIT
The S&S 117" big bore top end kit, for 96" and 103" engines, is an economical route to big inches and increased performance. Use the stock crankcases, flywheel assembly, and cylinder heads for a stock look and a smaller price tag. Crankcase boring is required to accommodate the larger 4⅛" bore cylinders. Finish the conversion off with your choice of performance cams, fuel system upgrade, and tuning. Available in dished dome or flat topped pistons and in wrinkle black or silver powder coat finish that matches the stock heads and cases. See page 74.



107" & 106" BIG BORE KIT
A low cost bolt-on kit provides big displacement! The 107" and 106" Big Bore Kits offer the simplicity of a bolt-on cylinder kit. Satisfy your thirst for speed! Bore is increased from 3.750" to 3.927", taking your displacement from 96" or 103" to 106"! The kit contains cylinders, pistons, rings and all gaskets needed. Fuel injection tuning required. See page 76

PERFORMANCE KIT SPECIFICATIONS FOR HARLEY-DAVIDSON® TWIN CAM 96™/103™/110™

KIT DESCRIPTION	BORE	STROKE	COMPRESSION RATIO								CAMSHAFT	HORSEPOWER	TORQUE
			Stock Heads	79cc	89cc	91cc	CNC Heads					(CNC Heads)	
							83cc	85cc	87cc	90cc			
Power Pack	4"	4 ⅜"	10.5	11.1	10.2	9.9	10.7	10.5	10.3	10	585	110	119
124" Hot Set Up Kit (Flat Top Piston)	4 ⅛"	4 ⅝"	11.4:1	*	11:1	10.8:1	11.6:1	11.4:1	11.2:1	10.9:1	640	127	130
106" Big Bore Kit	3.927"	4 ⅜"	10.0:1	10.7:1	9.7:1	9.5:1	10.2:1	10.1:1	9.9:1	9.6:1	–	106	108

**Not Recommended*

PERFORMANCE KIT CONTENTS, OPTIONS AND REQUIREMENTS FOR HARLEY-DAVIDSON® TWIN CAM 96™/103™/110™

KIT DESCRIPTION	PACKAGE CONTENTS										MACHINING REQUIRED	CTO OPTIONS*	REJETTING OR CALIBRATION CHANGE
	Flywheels	Cylinders	Pistons w/rings	Rocker Arms	Pushrods w/covers	Lifters	Camshafts	Valve Springs	Heads w/springs	Gaskets			
Power Pack		●	●			●	●						
124" Hot Set Up Kit	●	●	●	●	●	●	●		❶	●	❸❹	❺❻❼	●
117" Big Bore Kit		●	●						❶	●	❸❹	❺❻❼	●
106" Big Bore Kit		●	●							●			●

❶ = *Optional*
❷ = *Order separately*
❸ = *Bore & hone cylinders*
❹ = *Crankcase machining for center stud*
❺ = *Crankcase machining for cylinder spigots*
❻ = *Camshaft selection*
❼ = *CNC heads*
❽ = *Combustion chamber size selection*
❾ = *Cylinder & piston set available*

**The CTO option column lists only the major items offered. Virtually any option can be selected from our product offerings through the Configure To Order (CTO) program.*

FUEL INJECTION TUNING REQUIRED. S&S OFFERS FUEL INJECTION TUNING SOLUTIONS: SEE PAGE 111

4" BORE BOLT-IN SIDEWINDER® BIG BORE KITS



S&S 4" big bore cylinder and piston kits boost 96/103" HD® big twin engines to 110". These bolt-in kits don't require any machining, rebalancing or engine removal and include just about everything you'll need to complete the installation. The biggest cylinder bore that can be installed in a stock crankcase without machining!

FEATURES & BENEFITS

- Bolts in. No machining, balancing, or splitting the crankcases
- 96" and 103" engines end up at 110"
- Complete kits include cylinders, pistons, gaskets, and instructions
- Choose from wrinkle black or silver powder coat cylinders – *matches stock finish*

FITMENT

- 2007–17 big twins *(except 2017 touring models)*

SPECS FOR S&S 4" BORE BOLT-IN CYLINDER & PISTON KITS

Year	Stroke	Bore	Cylinder Length	Piston Type	Dome Volume	Compression Ratio		
						83cc CNC Heads	85cc Stock Heads	89cc S&S Heads
2007–2017	4 3/8	4.00"	4.937"	Forged	.75 pop up	10.7:1	10.5:1	10.2:1



4" BORE BOLT-IN SIDEWINDER® BIG BORE KITS

Displacement	Year	Stroke	Finish	Part #
110	2007–'17 big twin *(except 2017 touring)*	4 3/8"	Silver	**910-0650**
	2007–'17 big twin *(except 2017 touring)*	4 3/8"	Wrinkle Black	**910-0651**

DISCLAIMER: NOT LEGAL FOR SALE OR USE IN CALIFORNIA ON ANY POLLUTION CONTROLLED MOTOR VEHICLE. NOT LEGAL FOR SALE OR USE NATIONWIDE ON ANY FEDERAL POLLUTION CONTROLLED MOTOR VEHICLE UNDER THE CLEAN AIR ACT

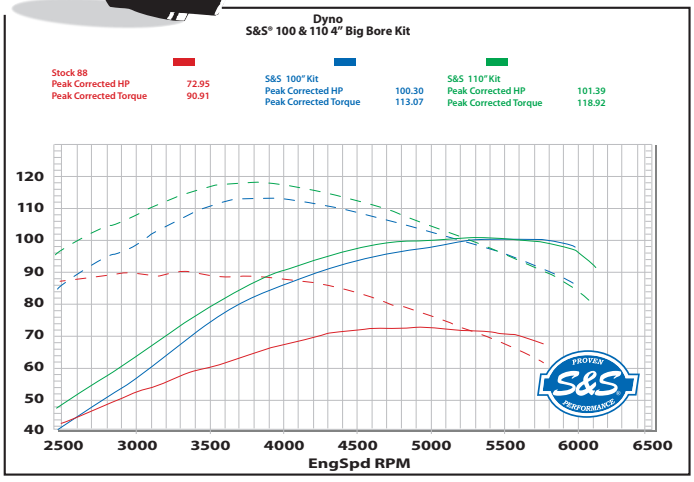

These dyno results from our DynoJet® 250i chassis dynamometer clearly show the performance increases available with the S&S bolt-in 4 inch bore kits. The lowest (red) set of curves represents a stock 88 cid engine in a 2004 Harley-Davidson® FLHR Road King®. The next curves above the stock baseline (blue) shows the performance of the S&S 100" bolt-in big bore kit. The highest set of curves show the results from an S&S 110" big bore kit installed in a 96 cid engine. The engines with the S&S 100" and 110" kits were also set up with S&S 585 cams, Power Tune® headers, MK45 muffler, and the stock EFI throttle body with an S&S Stealth air cleaner.

NOTES

Not for use with S&S 79cc Cylinder Heads.

Not for use on trike models.

124" HOT SET UP KIT®

Now with Easy Start Gear Drive Cams!

S&S GEAR DRIVE

FITMENT

- All 2007–'17 big twin models and 2006 Dyna® models, except 2017 touring models *(2016 Twin-Cooled™ models not compatible with kits containing heads)*

FEATURES AND BENEFITS

- Huge displacement increase means huge power increase
- Stock crankcases, cylinder heads, oil pump, and cam cover can be reused
- Original engine serial numbers are retained
- Gear drive S&S 640 Easy Start Cams included!
- Wrinkle black& stone gray powder coat finish matches factory finish
- .045" MLS *(multi-layered steel)* head gaskets
- Adds .096" to engine height—still fits in stock frames
- Kits with S&S heads use stock length manifolds *(S&S size 405)*
- Cylinder w/piston kits include fitted pistons ready to install

OPTIONS

The following three options are examples of the most commonly ordered kits.
Option 1 *(10.8:1 compression ratio)* includes:
- S&S 91cc high flow Super Stock® heads
- Flat topped pistons

Option 2 *(without heads)* Available only through CTO. Includes:
- Flat topped pistons

Option 3 *(without heads, 10.4:1 compression ratio intended for stock 85cc chamber cylinder heads)* includes:
- 10.9cc Dished pistons

Silver finish available through CTO.

S&S® 124" HOT SET UP KIT® SPECIFICATIONS

Year	Stroke	Bore	Cylinder Length	Piston Type/Compression Ratio			
				91cc S&S Heads	89cc S&S Heads	85cc Stock Heads	95cc Stock 110 CVO Heads
2007–'16	4 5/8"	4 1/8"	5.004"	Flat top forged/10.8:1	Flat top forged/11:1	Forged, 10.9cc dish/10.4:1	10.5:1



900-0569

124" HOT SET UP KITS® FOR HARLEY-DAVIDSON® TWIN CAM 96™/96B™ /103™/110™ ENGINES

(Kits include S&S® Super Stock® 91cc Cylinder Heads 10.8:1 Compression)

Model or Engine Type	Cam	Finish	Part #
2006 Dyna® & 2007–'17 Twin Cam 96™/103™ & 2008–up touring models	640GE	Wrinkle Black	**900-0568**
2007–'17 big twins w/Balancer			**900-0569**
CTO Other Finishes and Combinations Available Here	Specify	Specify	**106-5752**

Does not fit Twin-Cooled™ models

DISCLAIMER: NOT LEGAL FOR SALE OR USE IN CALIFORNIA ON ANY POLLUTION CONTROLLED MOTOR VEHICLE. NOT LEGAL FOR SALE OR USE NATIONWIDE ON ANY FEDERAL POLLUTION CONTROLLED MOTOR VEHICLE UNDER THE CLEAN AIR ACT

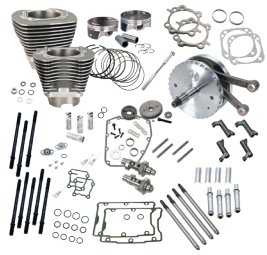

124" HOT SET UP KIT® WITHOUT HEADS FOR HARLEY-DAVIDSON® CVO 110 ENGINES

(KITS INCLUDE FLAT TOP PISTONS 10.5:1 COMPRESSION WHEN USED WITH 95CC STOCK 110 CVO HEADS)

Year	Cam	Finish	Part #
2007–'17 CVO 110 engines	640	Stone Gray	**900-0690**

DISCLAIMER: NOT LEGAL FOR SALE OR USE IN CALIFORNIA ON ANY POLLUTION CONTROLLED MOTOR VEHICLE. NOT LEGAL FOR SALE OR USE NATIONWIDE ON ANY FEDERAL POLLUTION CONTROLLED MOTOR VEHICLE UNDER THE CLEAN AIR ACT

NOTES

S&S Easy Start Cams save you money—no need to buy compression releases or S&S rocker covers.

Twin-Cooled applications will require separate purchase of 900-0609 head gaskets.

For engines with cable controlled throttle bodies we recommend the S&S 58mm or 66mm Throttle Hog (See page page 106). For 2008–up touring models with electronic throttle control S&S recommends a S&S Throttle Hog 58mm or 66mm Throttle body (See page 107).

This kit will require that the case be bored to accept the larger cylinders.

Main Bearing Note: S&S flywheel assemblies included in a 124" S&S Hot Set Up Kit® for 1999–'16 big twin engines are designed for use with Timken® sprocket shaft bearings. They will fit directly in stock 1999–'02 Harley-Davidson® crankcases and in all S&S crankcases for 1999–'16 big twin engines, with no modifications. However, stock 2003 and later engines use a roller type bearing for the sprocket shaft, and will require modification.

Due to the amount of power these engines produce with an S&S Hot Set Up Kit, S&S strongly recommends retrofitting 2003–'16 model crankcases to accept a Timken sprocket shaft bearing. A Timken conversion sleeve such as Screamin' Eagle® #34822-08 or Jim's® #956 may be used. A charging system spacer for 1999–'02 model year is also required.

If you choose not to convert your crankcases to a Timken sprocket shaft bearing, S&S flywheels may be used in 2003 and later engines with the installation of the Harley-Davidson® bearing kit #24004-03B. This bearing kit adapts the S&S sprocket shaft to be compatible with stock roller type bearings. Verify that the bearing kit contains the 24604-00D or 24607-07 or sprocket shaft bearing or S&S p/n 310-0761 for touring models. Do not use a 24604-00, 24604-00A, 24604-00B or 24604-00C bearing. Please be advised that if this type of bearing is used, sprocket shaft bearing failure WILL NOT be covered under warranty.

Fuel injection tuning is required. S&S offers fuel injection tuning solutions: See page 111

Kits with S&S heads are machined special to compensate for engine height change to accomodate a stock length manifold. When using a kit with stock cylinder heads, S&S recommends using the appropriate length manifold. For a 124" with stock OEM cylinder heads, the standard manifold length is 417.

Center case bolt between cylinders will use waisted bolt kit 900-0807

117" BIG BORE KITS

FITMENT

- 2007–'17 big twins, *except 2017 touring models (Twin-Cooled™ models require 900-0609 head gaskets)*

FEATURES AND BENEFITS

- Large displacement increase with a small price
- Your original crankcase, flywheel, cylinder heads, oil pump, and cam cover are reused
- Silver or wrinkle black powder coat matches factory finish
- .060" shorter than stock engine - no frame clearance issues
- Piston weight is the same as stock Twin Cam 96™/103™—no balancing required
- Piston is plated for extreme durability and skirts feature low friction Wiseco ArmorGlide® coating



910-0221

117" BIG BORE KITS

Model or Engine Type	Piston	Finish	Part #
117" Standard Compression	Flat Top	Silver	**910-0213**
		Wrinkle Black	**910-0221**
117" Low Compression	Dished	Silver	**910-0321**
		Wrinkle Black	**910-0318**
Special Order*		Specify	**91-7506***

**Download the Special Order Form at sscycle.com/soforms*

DISCLAIMER: NOT LEGAL FOR SALE OR USE IN CALIFORNIA ON ANY POLLUTION CONTROLLED MOTOR VEHICLE. NOT LEGAL FOR SALE OR USE NATIONWIDE ON ANY FEDERAL POLLUTION CONTROLLED MOTOR VEHICLE UNDER THE CLEAN AIR ACT

S&S® 117" BIG BORE KIT SPECIFICATIONS

Year	Stroke	Displacement	Bore	Cylinder Length	Piston Type	Compression Ratio			
						91cc Super Stock Heads	89cc Super Stock Heads	85cc Stock Heads	83cc CNC Ported Stock Heads
2007–'17	4 3/8"	117"	4 1/8"	4.878"	Flat Top 106-3491A	10.4:1	10.5:1	10.9:1	11.2:1
2007–'17	4 3/8"	117" LC	4 1/8"	4.878"	Dished, 10cc 920-0046	9.5:1	9.7:1	10.0:1	10.3:1

NOTES

Twin-Cooled applications will require separate purchase of 900-0609 head gaskets.

The 117" cylinder kit will reduce the engine height ~.060", this may require the stock manifold be shortened by sanding some material off each side of the intake runner.

Cylinder w/piston kits included in this Hot Set Up Kit are pre-fit and ready to install.

2008-up touring models with electronic throttle control recommends S&S Throttle Hog 58mm or 66mm Throttle body (See page 107) and Harley-Davidson® race tuner.

This kit will require that the case be bored to accept the larger cylinders.

.030" MLS head gaskets optional: Part #900-0217

S&S recommends retrofitting a Timken bearing (31-4013) into 2003–'16 model crankcases with the use of a Timken sleeve, Screamin' Eagle #34822-08 or Jim's #956. A charging system spacer for 1999–'02 model year is also required. S&S p/n 310-0761.

Requires recalibration.

110" PISTONS AND CAMS

MAKE THAT BIG HOG REALLY RUN!
S&S CAMS AND PISTONS FOR CVO™ 110

Not satisfied with 86 horsepower from your CVO™ 110 engine? Neither were we! Fortunately, we can show you how to make that big hog really run. Here's how.

1. Install an S&S performance exhaust and air cleaner — *a must for any performance upgrade*
2. Install a set of S&S 585 bolt-in cams and tune the EFI system — *produces over 107 horsepower*
3. Increase the compression ratio from the stock 9.3:1 to 10.6:1 with S&S high compression pistons — *brings the horsepower up to 114*





FITMENT
- 2007–Up Harley-Davidson® CVO™ 110 engines

FEATURES AND BENEFITS
- Significant performance increase — *See the dyno chart*
- Don't trade torque for horsepower — *get more of both! See the dyno chart*
- Easy installation! All parts bolt in without splitting the cases or even removing engine from the frame
- S&S Easy Start Cams ensure reliable starting even with high compression pistons

S&S exclusive EASY START CAMS US PATENT 7,099,035

S&S exclusive GEAR DRIVE US PATENT 6,318,321

10.6:1 HIGH COMPRESSION PISTONS FOR HARLEY-DAVIDSON® CVO™ 110 ENGINES

Fitment	Deck Height	Wristpin Diameter	Standard	+.010"
2007–'17 bt CVO™ 110" engines	1.0895"	.927"	**920-0114**	**920-0115**

585 CAMSHAFTS FOR HARLEY-DAVIDSON® CVO™ 110 ENGINES

Cam Style	Easy Start*	Standard
Chain Drive 585 cams (includes installation kit)	**106-5233**	**106-4382**
Gear Drive 585 cam kits (includes inner and outer gears and installation kit)	**106-5225**	**33-5268**

**S&S Easy Start cams feature a built-in automatic compression release for reliable starting. For more information go to www.sscycle.com/easy-start-cams*

DISCLAIMER: NOT LEGAL FOR SALE OR USE IN CALIFORNIA ON ANY POLLUTION CONTROLLED MOTOR VEHICLE. NOT LEGAL FOR SALE OR USE NATIONWIDE ON ANY FEDERAL POLLUTION CONTROLLED MOTOR VEHICLE UNDER THE CLEAN AIR ACT

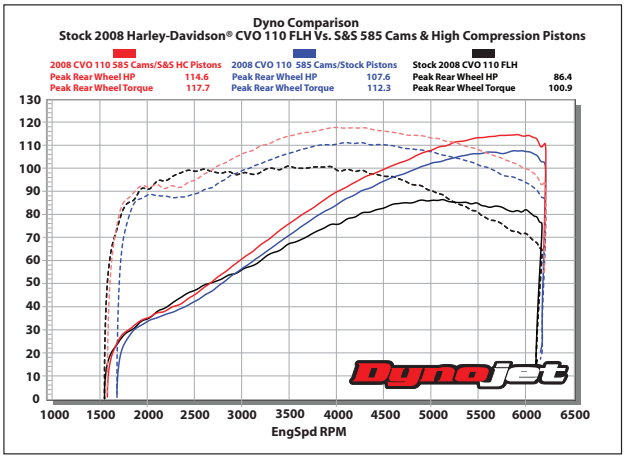

The Dynojet® 250i chassis dynamometer shows how this 2008 Harley-Davidson® CVO™ FLH revealed its true potential with the addition of S&S performance exhaust, intake and 585 cams. The top set of curves show that bumping the compression with S&S 10.6:1 pistons really wakes up the engine and makes over 114 horsepower. That's a total increase of over 28 horsepower or nearly 33%! All tests were done with the stock 50mm throttle body. Make even more power with an S&S 58mm Throttle Hog or cable controlled throttle body.

107" BIG BORE KITS

FITMENT

- 2007–2017 big twins, *except 2017 touring models*
- 2014–2017 Twin Cooled models, *except 2017 touring models*

FEATURES AND BENEFITS

- 3.937" bore
- Cylinder and piston kits make going to a larger bore size easy—*no machining required*
- Stock engine height is maintained
- 11 fin cylinder design closely resembles OEM shape and come final honed—*ready to install*
- Increased fin area for better heat dissipation
- Centrifugal cast, gray iron liner features 40,000 psi tensile strength—*superior wear and performance*
- CP Pistons are recognized as industry leaders and provide exceptional wear, performance and noise characteristics

KIT CONTENTS

- S&S cylinders with gaskets
- Piston set with rings, wristpins, and wristpin clips



910-0500

S&S® 107" BIG BORE KIT AND HOT SET UP KIT SPECIFICATION CHART

Year	Stroke	Bore	Cylinder Length	Piston Type	COMPRESSION RATIO (with provided .045" head gasket)		
					83cc CNC Ported Stock Heads	85cc Stock Heads	89cc S&S Heads
2007–2017	4 3⁄8"	3.937"	4.937"	Forged, 3cc Dome	10.7:1	10.5:1	10.1:1

Cylinder w/piston kits include pistons and cylinders that require no boring or honing.

107" BIG BORE KITS

Fitment	Cylinder Finish	Part #
2007–'17 big twin, *except 2017 touring models*	Silver	**910-0480**
	Wrinkle Black	**910-0500**

DISCLAIMER: NOT LEGAL FOR SALE OR USE IN CALIFORNIA ON ANY POLLUTION CONTROLLED MOTOR VEHICLE. NOT LEGAL FOR SALE OR USE NATIONWIDE ON ANY FEDERAL POLLUTION CONTROLLED MOTOR VEHICLE UNDER THE CLEAN AIR ACT

NOTES

Not for use with 79cc heads

S&S® highly recommends installing a performance cam for easier starting and better engine performance.

S&S high flow cylinder heads or CNC ported stock heads will provide further horsepower gains.

These kits require tuning.

106" BIG BORE KITS

FITMENT

- 2007–2017 big twins, *except 2017 touring models*
- 2014–2016 Twin Cooled models

FEATURES AND BENEFITS

- Increased fin area for better heat dissipation—be cool!
- Increase bore size from 3.750" to 3.927"—bigger is better!
- Easy installation – no machining or rebalancing required—economical!
- Forged coated pistons are compatible with stock or S&S Super Stock® 79cc & 89cc heads
- Valve pocket recessed in S&S pistons are enlarged for oversize valves and higher lift cams
- Maintains stock engine height and stock piston weight
- Cosmetic improvements—hard to tell from stock cylinders
  - 11 fins and full fin pattern on cam side closely resembles OEM shape
  - S&S logo and part numbers are less conspicuous
  - Better overall appearance

OPTIONS

- Oversize pistons available
- See page 87

KIT CONTENTS

- S&S cylinders with gaskets
- Piston set with rings
- Top end gasket kit
- Instructions

S&S® 106" BIG BORE KIT SPECIFICATION CHART

Year	Stroke	Bore	Cylinder Length	Piston Type	COMPRESSION RATIO			
					85cc Stock Heads	79cc S&S Heads	89cc S&S Heads	83cc CNC Ported Stock Heads
2007–'17	4⅜"	3.927"	4.937"	Forged Flat Top	10.0:1	10.7:1	9.7:1	10.2:1

Cylinder w/piston kits include fitted pistons and cylinders that require no boring or honing.

106" BIG BORE KITS

Fitment	Finish	Part #
2007–'17 big twin and 2014–'16 Twin-Cooled™ Models	Wrinkle Black	**910-0206**
	Silver	**910-0202**

DISCLAIMER: NOT LEGAL FOR SALE OR USE IN CALIFORNIA ON ANY POLLUTION CONTROLLED MOTOR VEHICLE. NOT LEGAL FOR SALE OR USE NATIONWIDE ON ANY FEDERAL POLLUTION CONTROLLED MOTOR VEHICLE UNDER THE CLEAN AIR ACT

106" HOT SET UP KITS® WITH CYLINDERS & PISTONS WITHOUT HEADS

Model Year	Cam	Compression Ratio	Piston Type	Valve Springs	Finish	Part #
2007–'17 big twin and 2014–'16 Twin-Cooled™ Models	585CE	10.0:1	Flat top	–	Wrinkle Black	**900-0354**
					Silver	**900-0355**

DISCLAIMER: NOT LEGAL FOR SALE OR USE IN CALIFORNIA ON ANY POLLUTION CONTROLLED MOTOR VEHICLE. NOT LEGAL FOR SALE OR USE NATIONWIDE ON ANY FEDERAL POLLUTION CONTROLLED MOTOR VEHICLE UNDER THE CLEAN AIR ACT

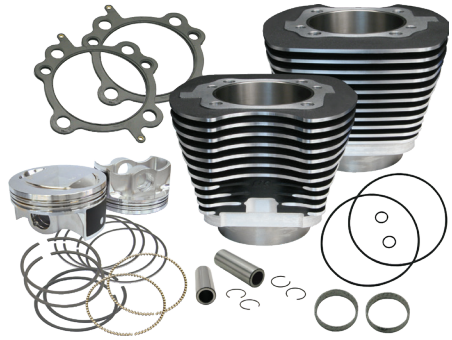

NOTES

S&S® highly recommends installing a performance cam for easier starting and better engine performance.

S&S high flow cylinder heads or CNC ported stock heads will provide further horsepower gains.

These kits require tuning.

ENGINE OVERVIEW

S&S performance engines for 2007–'17 Harley-Davidson® big twins are available as long blocks which do not include fuel or ignition systems. Engines are protected by super tough powder coat finishes. Available in silver and chrome, wrinkle black and chrome, stone grey and chrome, and Black Edition color schemes. Stone grey matches the engine finish on CVO models, and Black Edition is a wrinkle black engine with gloss black covers.

BLACK EDITION

S&S Cycle's new Black Edition engines combine classic wrinkle black with high gloss black powder coated covers for a subtle contrast and elegant look while still producing the power and reliability you've come to expect.

T143 (143 cid)

The T143 T2 long block engine is the largest (143 cid) S&S engine that will fit in a stock chassis. Long blocks come without fuel or ignition systems (available separately) and an oil line installation kit is required. Available in silver, wrinkle black, stone grey, or Black Edition finishes. The 160 rear wheel horsepower also requires performance drive train upgrades. Not for the faint of heart!

T124 (124 cid)

The S&S T124 T2 long block engine has been our daily rider hot rod since 2004. The combination of day in and day out reliability and brutal power make it the perfect choice. Available in silver, wrinkle black, stone grey, or Black Edition finishes. Long blocks come without fuel of ignition systems. Our Throttle Hog EFI throttle bodies are highly recommended.

T111 (111 cid)

The S&S T111 T2 long block is the ultimate sport touring engine. The shorter stroke provides a perfect combination of performance, engine life, quiet operation, and reduced vibration. Available in silver, wrinkle black, stone grey, or Black Edition finishes. Long blocks come without fuel or ignition systems. Our Throttle Hog EFI throttle bodies are available to complete the package.



T143 ENGINES

If Bigger is Better, the T143 is the Best…
The *BIGGEST, BADDEST, BOLT-IN* for a Stock Frame.

All joking about size aside, it does matter. The S&S T143 Long Block engine for Harley-Davidson® models is the largest S&S engine that will fit in a stock Harley- Davidson® chassis. It's big, 143 cubic inches. 'Nuff said.
At double the HP of a stock motor the power of the T143 requires technical expertise for the installation and tuning along with an experienced rider. This is an ultra performance/race engine. Longevity, engine noise, vibration and throttle sensitivity have all been compromised to reach this level of performance while fitting in a stock chassis and as such is not suitable for every situation. It is the purchaser's responsibility to consider the suitability for their application. Engine noise and damage from abuse is not covered under warranty.



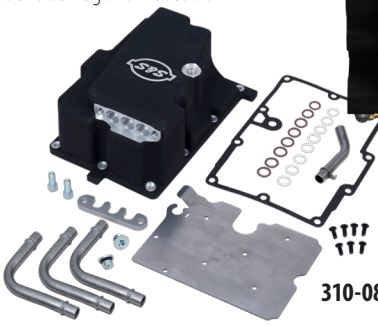

310-0870



310-0435



170-0253±



170-0288

FITMENT
- 2007–'16 Harley-Davidson® touring models
- 2006–'17 Dyna® models

FEATURES AND BENEFITS
- Fits in stock chassis—no cutting or frame modifications
- S&S B3 cylinder heads CNC machined with 2 bolt exhaust flanges
- S&S Super Stock T2 Crankcases with reed breather valve
- 3 Piece Flywheels
- TC3 Oil Pump and Cam Plate
- S&S 635 Easy Start Gear Drive Cams and S&S 1.725:1 rocker arms for .674" total lift.
- S&S Precision Tappets
- 1 year warranty

OPTIONS
- Wrinkle Black, Stone Gray, or Black Edition powder coat finish

SUGGESTED ACCESSORIES
- Stealth Air Cleaner Kit 143 Cover: See page 67

NOTE
T-Series engines are not compatible with HD® Softail® models.

T143 ENGINES WITHOUT FUEL AND IGNITION SYSTEMS

Chassis Style	Displacement	Bore	Stroke	Cam	Piston Type	CR	Warranty	Finish	Part #
2007–'16 touring models	143"	4.425"	4⅝"	635	S&S Forged Flat Top	10.5:1	1 year	Wrinkle Black & Chrome	**310-0548A**
								Stone Gray	**310-0549A**
								Black Edition	**310-0837A**
2006–'17 Dyna® Models	143"	4.425"	4⅝"	635	S&S Forged Flat Top	10.5:1	1 year	Black Edition	**310-0901A**
								Wrinkle Black & Chrome	**310-0883A**

DISCLAIMER: NOT LEGAL FOR SALE OR USE IN CALIFORNIA ON ANY POLLUTION CONTROLLED MOTOR VEHICLE. NOT LEGAL FOR SALE OR USE NATIONWIDE ON ANY FEDERAL POLLUTION CONTROLLED MOTOR VEHICLE UNDER THE CLEAN AIR ACT

REQUIRES OIL LINE INSTALLATION KIT. See chart.

INSTALLATION PARTS

Description		Part #
Oil Line Install Kit for 2006–'17 Dyna® Models	Wrinkle Black	**310-0870**
	Silver	**310-0871**
Oil Line Kit for 2007–'16 touring models		**310-0435±**
Transmission Drilling Fixture Kit for 2007–'16 touring models		**530-0006**
Head Mount Bracket	2009–'16 touring	**900-0798**
	2008 touring	**900-0797**
Fuel Injector *2 pack*		**550-0603**

Description	Part #
70mm Induction Kit* 2008–'16 touring (includes injectors)	**170-0253±**
70mm Induction Kit Cable operated 2007–'17 Dyna® models & 2007 touring models (includes injectors)	**170-0288**

*Includes a 70mm S&S Throttle Hog specially designed for the T143 engine in which a functional, stock, throttle by wire throttle body must be supplied to build. See page 107 for more details.
± WARNING: Cancer and Reproductive Harm – www.P65Warnings.ca.gov

T-SERIES T2 LONG BLOCK ENGINES



FITMENT
- 2007–'16 touring models (except Twin-Cooled™ models)
- 2006–'17 Dyna® Models

FEATURES AND BENEFITS
- No fuel system or ignition systems included—Use what you already have
- Special Head machining—Fits stock length intake manifolds (S&S manifold size 405)
- Stock style breathing system—stock breather spacing and function is compatible with stock and most performance air cleaners
- Super Stock™ T2 Crankcase
- 3 Piece Flywheels
- TC3 Oil Pump and Cam Plate
- S&S Easy Start gear drive cams
- Stock Twin Cam 96™ bolt pattern

OPTIONS
- T111—111 cubic inches, perfect sport-touring engine
- T124—124 cubic inches, hot-rod performance, 640 Easy Start gear drive cams
- T124LC—124 cubic inches with slightly lower compression, 585 Easy Start gear drive cams
- Stone Gray powder coat finish that matches the Granite color of a "stock" CVO engine

SUGGESTED ACCESSORIES
- Stealth Air Cleaner Kits. See page 64

T124 ENGINES WITHOUT FUEL AND IGNITION SYSTEMS

Chassis Style	Displacement	Bore	Stroke	Cam	Piston Type	CR	Warranty	Finish	Part #
2007–'16 touring models	124"	4⅛"	4⅝"	640	S&S Forged Flat Top	10.8:1	2 Year	Black Edition	**310-0835A**
								Wrinkle Black & Chrome	**310-0400A**
								Stone Gray	**310-0511A**
				585	S&S Forged Dished, 11cc	10.2:1	2 Year	Black Edition	**310-0836A**
								Wrinkle Black & Chrome	**310-0401A**
								Stone Gray	**310-0512A**
2006–'17 Dyna® Models	124"	4⅛"	4⅝"	640	S&S Forged Flat Top	10.8:1	2 Year	Black Edition	**310-0900A**
								Wrinkle Black & Chrome	**310-0882A**
CTO				Specify		Specify	Varies	Specify	**319-0010**

T111 ENGINES WITHOUT FUEL AND IGNITION SYSTEMS

Chassis Style	Displacement	Bore	Stroke	Cam	Piston Type	CR	Warranty	Finish	Part #
2007–'16 touring models	111"	4⅛"	4⅛"	585	S&S Forged	9.8:1	2 Year	Wrinkle Black & Chrome	**310-0402A**
2007–'16 touring models				585				Black Edition	**310-0834A**
CTO				Specify		Specify	Varies	Specify	**319-0010**

REQUIRES OIL LINE INSTALLATION KIT. See chart.

INSTALLATION PARTS FOR S&S T-SERIES T2 LONG BLOCK ENGINES

Description		Part #
Oil Line Kit for 2007–'16 touring models		**310-0435±**
Transmission Drilling Fixture Kit		**530-0006**
Oil Line Install Kit for 2006–'17 Dyna® models*	Wrinkle Black	**310-0870**
	Silver	**310-0871**

*DISCLAIMER: NOT LEGAL FOR SALE OR USE IN CALIFORNIA ON ANY POLLUTION CONTROLLED MOTOR VEHICLE. NOT LEGAL FOR SALE OR USE NATIONWIDE ON ANY FEDERAL POLLUTION CONTROLLED MOTOR VEHICLE UNDER THE CLEAN AIR ACT

± WARNING: Cancer and Reproductive Harm – www.P65Warnings.ca.gov

COMPLETE ENGINE REBUILD GASKET KITS

S&S Engine Family	Bore Size	Part #
T-Series	4⅛"	**310-0335**





NOTES

T-Series engines are not compatible with HD® Softail® models.

ENGINE MANAGEMENT AND FUEL SYSTEMS

Cylinder heads on these engines are specially machined to compensate for the non-stock cylinder length. As a result, they are compatible with manifolds and throttle bodies with stock length intake runners. In addition, the breather vent bolt locations have been adjusted so they are in the stock location, so stock style air cleaner back plates will bolt up to these engines.

Will require early style sprocket shaft spacer for charging system us S&S pn 310-0761 for touring models.

For best performance, S&S Throttle Hog Throttle Body is recommended. See page 107.

DISCLAIMER: NOT LEGAL FOR SALE OR USE IN CALIFORNIA ON ANY POLLUTION CONTROLLED MOTOR VEHICLE. NOT LEGAL FOR SALE OR USE NATIONWIDE ON ANY FEDERAL POLLUTION CONTROLLED MOTOR VEHICLE UNDER THE CLEAN AIR ACT

SUPER STOCK™ T2 CRANKCASE



FITMENT
- 2007–'16 Harley-Davidson® touring models
- 2006–'17 Dyna® models

FEATURES AND BENEFITS
- Stock looking, but stronger—Thicker wall sections and superior 356-T6 aircraft grade aluminum
- Tough powder coat finish
- Reinforced front motor mount for extra strength
- Timken® sprocket shaft bearing—Strong enough for the most demanding applications
- Clearanced for strokes up to 4 13/16" and cams up to .720" lift
- Includes pinion and Timken® bearing
- Manufacturer's Statement of Origin (MSO) included
- Includes studs and cam bearings installed

NOTE Will require early style sprocket shaft spacer for charging system. Use S&S pn 310-0761 for touring models.

KIT CONTENTS
- S&S crankcase
- Bearings and hardware
- Instructions

INSTALLATION PARTS
- S&S oil line kit *(required)*
- S&S transmission drilling fixture kit *(recommended for easy installation)*



310-0435±



530-0006

INSTALLATION PARTS

Description		Part #
Oil Line Kit for 2007–'16 touring models		**310-0435±**
Transmission Drilling Fixture Kit		**530-0006**
Oil Line Install Kit for 2006–'17 Dyna® Models	Wrinkle Black	**310-0870**
	Silver	**310-0871**

DISCLAIMER: NOT LEGAL FOR SALE OR USE IN CALIFORNIA ON ANY POLLUTION CONTROLLED MOTOR VEHICLE. NOT LEGAL FOR SALE OR USE NATIONWIDE ON ANY FEDERAL POLLUTION CONTROLLED MOTOR VEHICLE UNDER THE CLEAN AIR ACT

± ⚠ WARNING: Cancer and Reproductive Harm – www.P65Warnings.ca.gov

SUPER STOCK™ T2 CRANKCASES FOR 2007–'16 HARLEY-DAVIDSON® FL BIG TWIN ENGINES

Bore Size	Stone Gray	Wrinkle Black	Silver
Stock Bore (Stock Bolt Pattern) 2007–'16 touring models	–	**310-0367A†±**	**310-0366A†±**
Stock Bore (Dyna® models)	–	**310-0878***	**310-0881***
CVO 110 Stock Bore	**310-0543A†±**	–	–
4 1/8" Bore (Stock Bolt Pattern) 2007–'16 touring models	**310-0503*±**	**310-0369*±**	**310-0368*±**
4 1/8" Bore (Dyna models with Stock Bolt Pattern)	–	**310-0856***	–
4 3/8" Bore (S&S Bolt Pattern)†† 2007–'16 touring models	–	**310-0371*±**	**310-0370*±**
4.425" Bore 2007–'16 touring models	**310-0691±**	**310-0690±**	–
4.425" Bore (Dyna® models)	–	**310-0859**	–
Special Order	**319-0025**	**319-0025**	**319-0025**

Special Order: Download the Special Order Form at sscycle.com/soforms. Use the special order part number to order crankcases with a special finish

††*Requires seperate purchase of tappet covers sets #330-0281*

†Exempt from emissions tampering regulations under CARB EO# D-355-18 when used with stock bore cylinders

*DISCLAIMER: NOT LEGAL FOR SALE OR USE IN CALIFORNIA ON ANY POLLUTION CONTROLLED MOTOR VEHICLE. NOT LEGAL FOR SALE OR USE NATIONWIDE ON ANY FEDERAL POLLUTION CONTROLLED MOTOR VEHICLE UNDER THE CLEAN AIR ACT

± ⚠ WARNING: Cancer and Reproductive Harm – www.P65Warnings.ca.gov

REPLACEMENT PARTS: SEE PAGE 120

CRANKCASE BREATHER REED VALVES

FITMENT
- Twin Cam 96™/103™ *(except "B" engines)*
- S&S T-Series engines

FEATURES AND BENEFITS
- Improved oil scavenging and reduced oil carryover

S&S exclusive BREATHER VALVE US PATENT 6,899,066



310-0742

CRANKCASE BREATHER REED VALVES

Oil Pump Fitment	Year Application	Part #
For Engines with S&S Gear Oil Pump	2007–up S&S crankcases	**310-0742**

REPLACEMENT SPRING

Spring, Wave, 1.6" x 2" x 2", 2.8mm	**31-2078-S**

NOTES
- The crankcases breather valve for Twin Cam 96™/103™ engines was designed and developed for use with S&S Gear Oil Pumps and tappets, and may not be compatible with some aftermarket components.
- Not available for Twin Cam 96™/103™ "B" engines with internal balancers.
- Does not fit with aftermarket oil pumps.

3 PIECE FLYWHEEL ASSEMBLIES

FITMENT

- 2007–'17 Harley-Davidson® big twins (*except 2017 touring models)*—Balanced and unbalanced models
- S&S T-Series Engine and Hot Set Up Kit® replacement flywheels

FEATURES AND BENEFITS

- Heat-treated 4140 material is harder and 114% stronger than stock
- New light weight connecting rod forgings
- Available with full width wristpin connecting rods
- 1.671" diameter crankpin — increased contact area and tighter press fit for a stronger joint.
- No welding required!
- Integral mainshafts - eliminates two potential points of weakness
- Consistent balance and precision machining — Truer flywheels and less vibration
- Reduced mainshaft deflection at high rpm — less vibration, reduced piston and rod side thrusting, prevents oil pump damage, fully compatible with gear drive cams
- Capable of higher rpm — More available power!

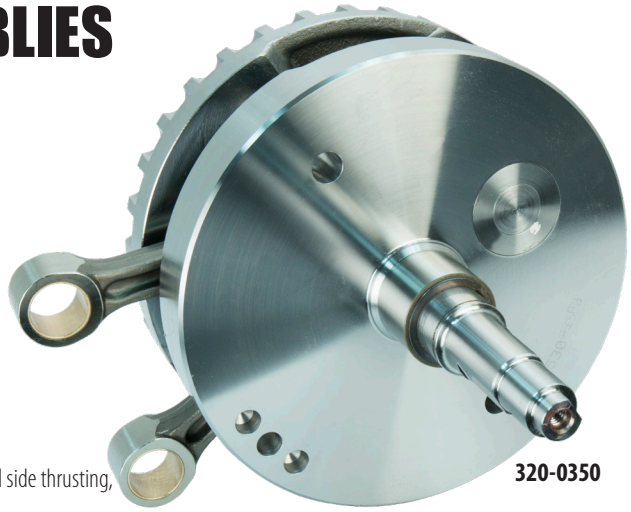

320-0350

How Strong Are Your Flywheels?
www.sscycle.com/videos

FLYWHEEL ASSEMBLIES FOR 2007–2017 HARLEY-DAVIDSON® BIG TWIN MODELS *(EXCEPT 2017 TOURING MODELS)*

Engine Displacement	Stroke	Balanced to Total Piston Weight (gms)	Rod WP End Style	Sprocket Bearing Race	Harley-Davidson® Twin Cam 96®/103™	Harley-Davidson® Twin Cam 96B™/103B™
96, 103, 106 big bore, 110, 117 w/S&S Pistons	4 3/8"	1035	Straight	Yes**	**320-0350**	**320-0356**
				No	**320-0351**	**320-0357**
96, 103, 110 w/Stock Pistons*	4 3/8"	1035	Tapered*	Yes**	**320-0352**	**320-0358**
				No	**320-0353**	**320-0359**
S&S 106 Stroker***	4 1/2"	1108	Straight	No	**320-0450**	**320-0544**
S&S 111	4 1/8"	1035	Straight	No	**320-0407**	**320-0413**
SE 120R (uses 7.575" length rods)†	4 5/8"	1035	Straight	No	**320-0523**	**320-0529**
S&S 124	4 5/8"	1035	Straight	No	**320-0464**	**320-0471**
S&S 143 (uses 7.800" length rods)	4 5/8"	1290	Straight	No	**320-0545**	**–**
Special Order	Specify	Specify	Specify	Specify	**329-0002**	**329-0002**

**Stock pistons in 2007 and later engines require rods with tapered wristpin ends.*

Note: All S&S Flywheels for 2007 and later engines have 7.659" length connecting rods (except the SE120R & S&S 143, see chart).

***Note: Flywheel assemblies supplied with sprocket shaft bearing race installed are compatible with stock roller style sprocket shaft bearings. Assemblies with no race require a Timken® sprocket shaft bearing.*

****4½" stroke flywheels include 7.667" long connecting rods.*

NOTES

†These flywheels are replacement flywheels for the SE 120R. When installing these flywheels in a Harley-Davidson® case, they need to run the HD piston oiling jets—*not the S&S® piston oiling jets.*

Strokes longer than stock will require S&S Piston Oiler Set, part #31-2026.

2007–up stock rod length is 7.659".

Main Bearing Note: Most S&S flywheel assemblies for 1999–'17 big twin engines are designed for use with Timken® sprocket shaft bearings. They will fit directly in stock 1999–'02 Harley-Davidson® crankcases and in all S&S crankcases for 1999-'17 big twin engines, with no modifications. However, stock 2003 and later engines use a roller type bearing for the sprocket shaft. S&S does offer flywheel assemblies that are compatible with late roller style stock sprocket shaft bearings, but they are not recommended for very large, high performance engines.

S&S strongly recommends retrofitting 2003–'16 model crankcases to accept a Timken sprocket shaft bearing. A Timken conversion sleeve such as Screamin' Eagle® #34822-08 or Jim's® #956 may be used. A charging system spacer for 1999–'02 model year is also required.

If you choose not to convert your crankcases to a Timken sprocket shaft bearing, S&S flywheels may be used in 2003 and later engines by either purchasing the stock compatible flywheels or by installing Harley-Davidson® bearing kit #24004-03B when using S&S flywheels designed for Timken bearings. This bearing kit adapts the S&S sprocket shaft so it is compatible with stock roller type bearings. Verify that the bearing kit contains the 24604-00D or 24607-07 sprocket shaft bearing. Do not use a 24604-00, 24604-00A, 24604-00B or 24604-00C bearing. Please be advised that if this type of bearing is used, sprocket shaft bearing failure WILL NOT be covered under warranty.

TRYING TO IDENTIFY AN S&S® FLYWHEEL?
SEE FLYWHEEL I.D. CHART: PAGE 342

REPLACEMENT PARTS: PAGE 123

TC3 CAM PLATE

S&S cam support plates are just what the doctor ordered when repairing a damaged engine or installing new camshafts. CNC machined from forged aluminum for excellent strength and dimensional accuracy. S&S cam support plates are available to fit 1999–2006 and 2007–'17 Harley-Davidson® big twin engines. We don't want to encourage bad habits so plates for 1999-2006 are not compatible with stock spring-loaded chain tensioners, and require late style hydraulic tensioners and oil pump. We suggest the S&S TC3 oil pumps be installed with S&S TC3 Cam Plate.



FITMENT

- 2007–'17 big twins and 2006 Dyna models, *except 2017 touring models*

FEATURES AND BENEFITS

- Precision CNC machined forged aluminum
- Adjustable oil pressure regulator—adjust without removing plate from engine
- Passage plugs are removable for service
- Made In The USA

*Not compatible with stock spring-loaded chain tensioners or stock 1999–2006 oil pumps. Hydraulic tensioners (Unless running gear drive cams) and 2007–later style oil pump is required.

TC3 CAM PLATE

Fitment	Part #
2006 Dyna® models & 2007–'17 bt *except 2017 touring models*	**310-0625**

TC3 OIL PUMP

If engine oil is the lifeblood of an engine, then the oil pump is its heart. If your engine needs a transplant, the S&S TC3 Oil Pumps are a great solution for worn out or destroyed stock units. Common causes of stock pump failure are debris and excessive pinion shaft run out. The new S&S oil pumps are much less likely to be damaged by either. Oh, and by the way, the S&S TC3 Oil Pumps pump and scavenge way more oil than stock. While you've got that engine apart, it would be a good time to install a forged S&S TC3 Cam Plate.



FITMENT

- 2007–'17 big twins and 2006 Dyna models, *except 2017 touring models*

FEATURES AND BENEFITS

- Consistent pressure and reliable scavenging
- Separate scavenge sections for flywheel cavity and cam chest—no interference
- Screens and magnetic traps help protect the scavenge rotors from debris
- Special design allows S&S pumps to tolerate more pinion shaft run out without damage
- Made in the USA!

TC3 OIL PUMP

Fitment	Part #
2006 Dyna® models & 2007–'17 bt *except 2017 touring models*	**310-0641**

TC3 OIL PUMP & CAM PLATE KITS



TC3 OIL PUMP AND CAM PLATE KITS

Fitment	Part #
2006 Dyna® models & 2007–'17 bt, *except 2017 touring models*	**310-0732**

REPLACEMENT PARTS: SEE PAGE 124 & PAGE 125

NEW FOR 2020 FROM S&S CYCLE

DIE CAST GEARCOVER

FITMENT

- 1999–'17 Twin Cam 88®, 96™ and 103™ *(except 2017 touring models)*
- S&S T-Series engines



DIE CAST GEARCOVER

Finish		Part #
Gloss Black	143"	**310-1084**
	124"	**310-1085**
	111"	**310-1086**
Chrome±	143"	**310-1087**
	124"	**310-1088**
	111"	**310-1089**

± ⚠ WARNING: Cancer and Reproductive Harm – www.P65Warnings.ca.gov

CYLINDERS WITH PISTONS KIT

- Cylinder w/piston kits include fitted pistons and cylinders, head gaskets, base, and exhaust gaskets
- Cylinder kits with pistons are honed to fit the pistons included.

S&S® 4" BORE BOLT-IN SIDEWINDER® KITS SPECIFICATION CHART

Displacement	Stroke	Bore	Cylinder Length	Piston Type	Dome Volume	Compression Ratio		
						83cc CNC Heads	85cc Stock Heads	89cc S&S Heads
110"	4 3⁄8	4.00"	4.937"	Forged	.75 pop up	10.7:1	10.5:1	10.2:1

4" BORE BOLT-IN SIDEWINDER® BIG BORE KITS

Displacement	Silver	Wrinkle Black
110	**910-0650**	**910-0651**

DISCLAIMER: NOT LEGAL FOR SALE OR USE IN CALIFORNIA ON ANY POLLUTION CONTROLLED MOTOR VEHICLE. NOT LEGAL FOR SALE OR USE NATIONWIDE ON ANY FEDERAL POLLUTION CONTROLLED MOTOR VEHICLE UNDER THE CLEAN AIR ACT

NOTES

Not for use with S&S 79cc Cylinder Heads.

Not for use on trike models.

PISTON REPLACEMENT PARTS: PAGE 87



CYLINDERS WITH PISTONS KIT CON'T

- Cylinder w/piston kits include fitted pistons and cylinders, head gaskets, base, and exhaust gaskets
- Cylinder kits with pistons are honed to fit the pistons included.



S&S® 4⅛" BORE CYLINDERS WITH PISTONS SPECIFICATION CHART FOR 124" AND 117" KITS

Displacement	Stroke	Cylinder Length	Forged Piston Type	Compression Ratio			
				85cc stock heads	89cc S&S heads	91cc S&S heads	SE 95cc heads
124"	4.625	5.004	Flat Top	11.4:1	11.0:1	10.8:1	10.5:1
124" Dish	4.625	5.004	10.9 cc dish	10.6:1	10.2:1	10.2:1	9.7:1
117"	4.375	4.878	Flat Top	10.9:1	10.5:1	10.4:1	10.0:1
117" Dish	4.375	4.878	10.9 cc dish	10.0:1	9.7:1	9.5:1	9.3:1
111"	4.125	4.754	Flat Top	10.3:1	9.9:1	9.8:1	9.4:1

4⅛" BORE CYLINDERS WITH PISTONS FOR 124" AND 117" KITS

Displacement	STOCK HEADS OR S&S HEADS WITH STOCK BOLT PATTERN		
	Stone Gray	Silver	Wrinkle Black
124"	**910-0469**	**910-0341**	**910-0338**
124" dish	**910-0490**	**910-0327**	**910-0324**
117"	**910-0474**	**910-0213**	**910-0221**
117" dish	–	**910-0321**	**910-0318**

DISCLAIMER: NOT LEGAL FOR SALE OR USE IN CALIFORNIA ON ANY POLLUTION CONTROLLED MOTOR VEHICLE. NOT LEGAL FOR SALE OR USE NATIONWIDE ON ANY FEDERAL POLLUTION CONTROLLED MOTOR VEHICLE UNDER THE CLEAN AIR ACT

S&S® BIG BORE KIT SPECIFICATION CHART FOR 106" & 107" KITS

Displacement	Bore	Stroke	Cylinder Length	Forged Piston Type	Compression Ratio (with provided .045" head gasket)			
					79cc S&S Heads	83cc CNC Ported Stock Heads	85cc Stock Heads	89cc S&S Heads
107"	3.937"	4⅜"	4.937"	3cc Dome	N/A	10.7:1	10.5:1	10.1:1
106"	3.927"	4⅜"	4.937"	Flat Top	10.6:1	10.2:1	10.0:1	9.7:1

Cylinder w/piston kits include pistons and cylinders that require no boring or honing.

BOLT-IN BIG BORE KITS

Displacement	Silver	Wrinkle Black
107"	**910-0480**	**910-0500**
106"	**910-0202**	**910-0206**

DISCLAIMER: NOT LEGAL FOR SALE OR USE IN CALIFORNIA ON ANY POLLUTION CONTROLLED MOTOR VEHICLE. NOT LEGAL FOR SALE OR USE NATIONWIDE ON ANY FEDERAL POLLUTION CONTROLLED MOTOR VEHICLE UNDER THE CLEAN AIR ACT

ALL OTHER BORES AND FINISHES ARE AVAILABLE THROUGH SPECIAL ORDER **91-7506***
* Special Order: Download the Special Order Form at sscycle.com/soforms

PISTON REPLACEMENT PARTS: PAGE 87

CYLINDERS

- Individual cylinders and cylinder sets without pistons are bored slightly under nominal size and are not honed.



910-0497

4.425" BORE CYLINDERS WITHOUT PISTONS FOR T143

Displacement		Stone Gray	Wrinkle Black
143"	Set	**910-0562**	**910-0565**

DISCLAIMER: NOT LEGAL FOR SALE OR USE IN CALIFORNIA ON ANY POLLUTION CONTROLLED MOTOR VEHICLE. NOT LEGAL FOR SALE OR USE NATIONWIDE ON ANY FEDERAL POLLUTION CONTROLLED MOTOR VEHICLE UNDER THE CLEAN AIR ACT

4⅛" BORE CYLINDERS WITHOUT PISTONS FOR 124" AND 117" HOT SET UP KITS (STOCK BOLT PATTERN)

Displacement		Stone Gray	Silver	Wrinkle Black
124"	Set	**910-0494**	**910-0392**	**910-0401**
117"	Set	**910-0497**	**910-0231**	**910-0252**

DISCLAIMER: FOR CLOSED COURSE COMPETITION USE ONLY. NOT INTENDED FOR STREET USE. LEGAL IN CALIFORNIA ONLY FOR RACING VEHICLES WHICH MAY NEVER BE USED, OR REGISTERED OR LICENSED FOR USE, UPON A HIGHWAY. NOT LEGAL FOR SALE OR USE NATIONWIDE ON ANY FEDERAL POLLUTION CONTROLLED MOTOR VEHICLE UNDER THE CLEAN AIR ACT.

NOTE

S&S 4⅛" pistons are machined to such close tolerances that it is not necessary to measure the piston. Additionally, the low friction coating on the piston skirt of early production pistons without micrometer window makes taking measurements very difficult. Therefore, hone cylinders to nominal diameter +/- 0.0001" for correct clearance. Current production pistons have micrometer windows in the coating on the piston skirts that allow accurate measurements to be taken. These pistons may be installed by honing cylinder to nominal diameter +/- 0.0001" or by measuring piston and honing cylinder to achieve .002"–.0025" close clearance for street applications or .0032"–.0045" loose clearance for immediate competition use.

3.937" BORE CYLINDER

Displacement		Silver	Wrinkle Black
107"	Front or Rear	**910-0478**	**910-0477**

DISCLAIMER: NOT LEGAL FOR SALE OR USE IN CALIFORNIA ON ANY POLLUTION CONTROLLED MOTOR VEHICLE. NOT LEGAL FOR SALE OR USE NATIONWIDE ON ANY FEDERAL POLLUTION CONTROLLED MOTOR VEHICLE UNDER THE CLEAN AIR ACT

3.927" BORE CYLINDERS

Displacement		Silver	Wrinkle Black
106"	Front or Rear	**910-0210**	**910-0212**

NOTE

S&S 3.927" & 3.937" pistons are machined to such close tolerances that it is not necessary to measure the piston. Additionally, the low friction coating on the piston skirt of early production pistons with out micrometer window makes taking measurements very difficult. Therefore, hone cylinders to nominal diameter +/- 0.0001" for correct clearance. Current production pistons have micrometer windows in the coating on the piston skirts that allow accurate measurements to be taken. These pistons may be installed by honing cylinder to nominal diameter +/- 0.0001" or by measuring piston and honing cylinder to achieve .002"–.0025" close clearance for street applications or .0032"–.0045" loose clearance for immediate competition use.

3⅞" BORE CYLINDERS

Displacement		Wrinkle Black
103" USA	Set	**910-0208**

NOTE

S&S 3⅞" pistons for 103" kits are machined to such close tolerances that it is not necessary to measure the piston. Additionally, the low friction coating on the piston skirt makes taking measurements very difficult. Therefore, hone cylinders to nominal diameter +/- 0.0001" for correct clearance.

ALL OTHER BORES AND FINISHES ARE AVAILABLE THROUGH SPECIAL ORDER **91-7506***
*Special Order: Download the Special Order Form at sscycle.com/soforms

PISTON KITS

- Piston kits include set of pistons, rings, wristpins, and clips





4" BORE FORGED PISTON KITS FOR 110

Displacement	Deck Height	Stroke	Standard
110	1.090"	4⅜"	**920-0127**

4.425" BORE FORGED PISTON KITS FOR T143

Displacement	Deck Height	Stroke	Standard	+.020"
T143	1.167"	4⅝"	**920-0106**	**920-0111**

4⅛" BORE FORGED PISTON KITS FOR HOT SET UP KITS®

Displacement	Deck Height	Stroke	Standard	+.010"	+.020"	+.030"
124" & 117" 10cc Dished	1.050"	Up To 4⅝"	**920-0046**	**920-0047**	**920-0050**	**920-0053**
124", 117" & 111" Flat Top	1.050"	Up To 4⅝"	**106-3491A**	**106-3872A**	**106-3964A**	**920-0094**

10.6:1 HIGH COMPRESSION PISTONS FOR HARLEY-DAVIDSON® CVO™ 110 ENGINES

Fitment	Deck Height	Wristpin Diameter	Standard	+.010"
2007–'17 bt CVO™ 110" engines	1.0895"	.927"	**920-0114**	**920-0115**



3.937" BORE FORGED PISTON KIT

Displacement	Deck Height	Stroke	Standard
107", 3cc dome	1.085"	4⅜"	**920-0100**

3.927" BORE FORGED PISTON KITS FOR 106" TOP END KITS

Displacement	Deck Height	Stroke	Standard	+.010"
106" Flat top	1.090"	4⅜"	**106-3690**	**106-4416**

3⅞" BORE FORGED PISTON KITS FOR 103" ENGINES

Displacement	Deck Height	Stroke	Standard	+.005"	+.010"
103" Forged, 5.2cc pop-up dome	1.083"	4⅜"	**106-0432**	**106-0433**	**106-0434**

NOTE

S&S' 4⅛", 3.937", 3.927", and 3⅞" pistons are machined to such close tolerances that it is not necessary to measure the piston. Additionally, the low friction coating on the piston skirt of early production pistons with out micrometer window makes taking measurements very difficult. Therefore, hone cylinders to nominal diameter +/- 0.0001" for correct clearance. Current production pistons have micrometer windows in the coating on the piston skirts that allow accurate measurements to be taken. These pistons may be installed by honing cylinder to nominal diameter +/- 0.0001" or by measuring piston and honing cylinder to achieve .002"–.0025" close clearance for street applications or .0032"–.0045" loose clearance for immediate competition use.

REPLACEMENT PARTS FOR PISTONS

REPLACEMENT CHROMOLY FACED PISTON RINGS

Bore	Standard	+.005"	+.010"	+.020"	+.030"
4.425"	**940-0043**	–	–	**940-0044**	–
4⅛"	**940-0014**	–	**940-0012**	**940-0013**	**940-0017**
3⅞"	**94-1290X**	**94-1294X**	**94-1291X**	–	–
3.927"	**106-3709A**	–	**106-4422A**	–	–
3.937"	**940-0032***	–	–	–	–
4"	**940-0056**	–	–	–	–
4.060" CVO 110"	**940-0040**	–	**940-0041**	–	–

**Only includes one set of rings.*

REPLACEMENT PISTON WRISTPINS

Description		Part #
Wristpin	For 4.425" Pistons	**940-0037**
	For 4 ⅛", 3 ⅞", 3.927" Pistons	**106-1052**
	For 3.937" Pistons	**940-0033**
	For 4" Pistons	**940-0057**

REPLACEMENT PISTON KEEPERS

Description		Part #
Keeper	*each*	**94-9278-S**
	2 pack	**94-9278-2**
	4 pack	**106-2304**
Keeper for 4.425"	*each*	**94-9278-S**
Keeper for 3.937" & 4"	*2 pack*	**940-0034**



POWER PACK

Bump 2007–'17 engines from 96ci or 103ci to 110ci with the new S&S 4" big bore kit. The kit also includes matched cams, cam plate, oil pump and everything else a high performance big inch engine needs to reliably make serious power.



FITMENT

- All 2007–'17 big twin models and 2006 Dyna® models, *except 2017 touring models*

FEATURES AND BENEFITS

- Largest big bore kit available without doing crankcase mods
- Upgrade Twin Cam 96® and Twin Cam 103™ to 110 cu inches
- Cylinders fit to pistons—No machining required
- All parts required to upgrade to gear drive cam or hydraulic tensioners
- Engineered package to deliver the best bolt-in performance available

POWER PACKAGE KIT

Fitment	Finish	Cam	Drive	Part #
2007–'17 *except '17 touring models*	Silver	585CE	Chain	**330-0666**
2007–'17 *except '17 touring models*	Silver	585GE	Gear	**330-0667**
2007–'17 *except '17 touring models*	Black	585CE	Chain	**330-0668**
2007–'17 *except '17 touring models*	Black	585GE	Gear	**330-0669**

DISCLAIMER: NOT LEGAL FOR SALE OR USE IN CALIFORNIA ON ANY POLLUTION CONTROLLED MOTOR VEHICLE. NOT LEGAL FOR SALE OR USE NATIONWIDE ON ANY FEDERAL POLLUTION CONTROLLED MOTOR VEHICLE UNDER THE CLEAN AIR ACT

NOTES

Pinion shaft runout must be less that .003" to use gear drive cams

Kit not available to fit '06 Dyna® models but parts may be purchased separately.

Not for use with S&S 79cc Cylinder Heads.

Not for use with trike models.

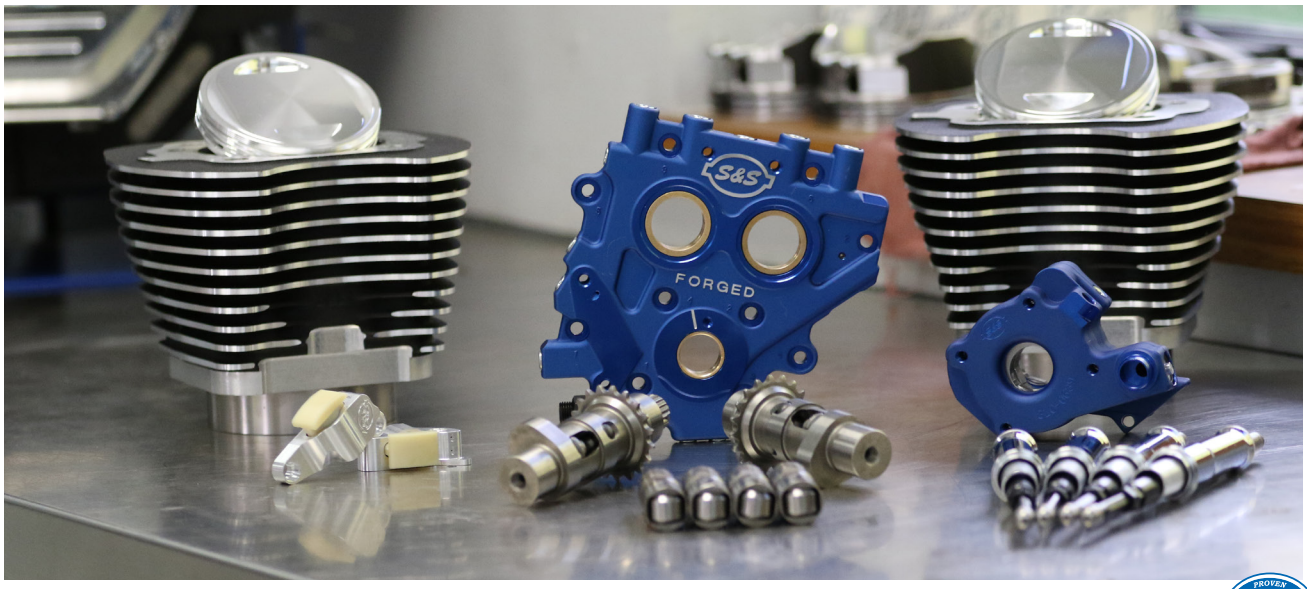

CAMSHAFT OVERVIEW

OES: Original Equipment Specification (OES) A bolt-in replacement cam with stock cam timing is designed for riders with stock engines. Does not require tuning. Bolt-in stock. Equivalent to HD® A-Grind

510: Designed as a bolt-in cam for 88, 95, and 96 CID engines with compression ratios below 9.7:1, it is primarily intended for use with stock, un-ported heads. 3000–5500 rpm. Bolt-in.

551: Designed for engines with 96 to 106 CID and 9:1 to 9:9 compression, this is a bolt-in cam set designed for stock or mildly modified touring bikes. 551 cams are not recommended for compression ratios of 10:1 or greater. Greatly improves low-end and midrange torque, strongest from idle–4000rpm. Bolt-in torque.

557: Designed for Tri Glide® models, this bolt-in cam, with its short duration, produces lots of usable torque. The camshaft's stock base circle permits the use of stock pushrods. However, we recommend S&S Quickee Adjustable pushrods for easy installation. Fits all 2009–2012 Harley-Davidson® Tri Glide® models. Bolt-in.

MR103: Designed as bolt-in cams for 103 CID engines with stock 9.7:1 compression ratio up to 10.5:1. Works well with stock, un-ported heads, but is great for S&S CNC ported heads. More power across the rpm range best results form 2500–5500 rpm. Bolt-in.

570: Designed for 88 to 103 CID engines with compression ratios between 9:1 and 10:1, this bolt-in cam will provide a nice power increase across the entire power band. 3200–5700 rpm. Excellent bolt-in for overall power on 103". Bolt-in overall.

583: Optimized for use in the Softail®/Dyna® lines, this bolt-in cam makes horse-power and torque that you can feel all the way through the rpm range, making the most power right where you need it:1500–5000rpm. Bolt-in. 583 cams are not recommended for enginess having comression ratios greater than 10.1:1.

HP103: Designed as bolt in cams for engines with 103 and stock 9.7:1 compression up to 10.5:1. Works well with stock, un-ported heads, but is great for S&S CNC ported heads. Best power in the higher rpm range, 3000–6000 rpm. Bolt-in.

585: Designed for 88 to 106 CID engines with compression ratios from 9.7:1 to 10.5:1 and 106 to 124 CID engines from 9:1 to 10:1 compression. This bolt-in cam provides massive horsepower and torque increases starting at 3000rpm and holds steady all the way to redline. 3500–6000 rpm for 88"–103" engines and 2500–5500 for larger engines.

625: Cam set designed for 95" or larger engines with compression ratios between 10.0 and 10.75:1. 3000–6000 rpm. High lift valve springs and adjustable pushrods required.

635 H.O.: High lift cam for modified engines with 106" or greater displacement and compression ratios between 10.0:1 and 11.0:1. Works well with stock, un-ported heads, but S&S CNC ported heads are recommended. Best power from 3000–6000 rpm. This is not a bolt-in cam set. High-lift valve springs, adjustable pushrods, and clearance checks are required.

640: Used in S&S T124 engines, this cam makes horsepower! Intended for engines of 95 CID or more w/compression ratios between 10.5:1 and 11.5:1. 3000–6000 rpm. High lift valve springs and adjustable pushrods required.

675: A high lift monster, this cam set is designed for 120" or larger engines with at least 11:1 compression ratio. 4500–6500 rpm. High lift valve springs and adjustable pushrods required.

S&S EASY START CAMS

Start any engine regardless of displacement or compression ratio, with a stock starter. Easy Start Cams from S&S® Cycle make hard starting obsolete for 1999-'16 big twins. Available in economical chain drive and rock-solid gear drive versions. Don't get caught "dead" without them!

FEATURES AND BENEFITS

- Start any engine with a stock starter
- Save your starter and battery!
- Reliable—tested for 100,000 accumulative starts and over 150,000 road miles without breakage or compression release failure!
- Automatic—no buttons to push

OPTIONS

- Chain drive or gear drive *(See the following pages for part numbers)*

HERE'S HOW IT WORKS

Each of the two exhaust cam lobes are equipped with a spring loaded compression release lobe on the "heel" of the cam at the point where the valve would normally be fully closed.

The lobe holds the exhaust valve open slightly at cranking speed.
This releases some of the compression, making the engine much easier to crank.
Once the engine starts, and rpm increases, the compression release lobe is centrifugally retracted and the engine runs normally, with full compression, and without any loss in performance. This allows a stock starter and battery to start nearly any engine.

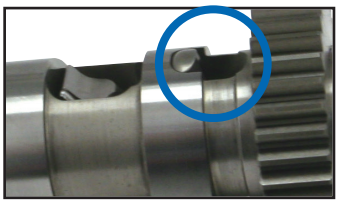

The compression release lobe reduces compression until the engine starts.

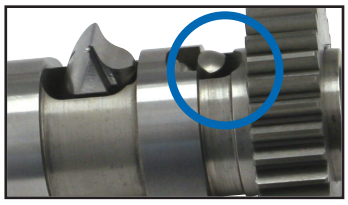

Increased rpm causes the compression release lobe to be centrifugally retracted so the engine runs normally.

CAMSHAFT OVERVIEW
CON'T

SPECIFICATIONS OF S&S® CHAIN DRIVE AND GEAR DRIVE CAMSHAFTS FOR 2007–17 BIG TWIN *(EXCEPT 2017 TOURING MODELS)*

Cam Name	Bolt-In	Valve Timing (open/close)		Valve Duration		Valve Lift	Centerline		Lift @ TDC		APPLICATION CROSS REFERENCE CHART		
		Intake	Exhaust	Intake	Exhaust		Intake	Exhaust	Intake	Exhaust	HD® Screamin' Eagle®	Andrews®	Most Fitting Application
		Open BTDC/ Close ABDC	Open BBDC/ Close ATDC										
OES	●	-9°/25°	42°/-3°	196°	219°	.474"	107°	112.5°	.087"	.110"			
510	●	20°/38°	52°/20°	238°	252°	.510"	99°	106°	.187"	.178"			
551**	●	17°/19°	41°/17°	216°	238°	.550"	91°	102°	.178"	.170"	SE-203/255	21H/26H	Touring
557	●	6°/27°	39°/12°	212°	231°	.557"	100°	103°	.113"	.146"			Tri-Glide®
MR103	●	13°/33°	50°/22°	226°	252°	.585"	100°	104°	.172"	.177"			
570	●	20°/40°	55 °/20°	240°	255°	.570"	100°	107.5°	.187"	.179"	–	54H	All big twin
583	●	5°/18°	58°/24°	203°	262°	.583"	96.5°	107°	.113"	.206"	SE-203/255	21H/26H	Softail®/ Dyna®
HP103	●	20°/49°	45°/26°	249°	251°	.575"	104.5°	99.5°	.199"	.206"			
585	●	20°/45°	60°/20°	245°	260°	.585"	102.5°	110°	.186"	.179"	SE-21 1/251/257	31H/32H/50H 55H/67H	All big twin
625		20°/55°	60°/20°	255°	260°	.625"	107.5°	110°	.189"	.184"	SE-258/260	60H	All big twin
635H.O.		19.5°/43.5°	58.5°/37.5°	243°	276°	.635"	102°	100.5°	.186"	.284"			
640		25°/60°	65°/25°	265°	270°	.640"	107.5°	110°	.228"	.214"	SE-264	59H	All big twin
675		25°/64°	70°/25°	269°	275°	.675"	109.5°	112.5°	.235"	.205"	–	64H	All big twin

***551 cams are not recommended with compression ratio of 10:1 or higher.*

NOTE Stock valve springs in 2005–up engines can accommodate valve lifts up to .590".

All reference to HD® part numbers is for identification purposes only. We in no way are implying that any of S&S Cycle's products are original equipment parts or that they are equivalent to the corresponding HD® part number shown.

GEAR DRIVE CAM KITS

FITMENT
- 2006 Dyna® and 2007–'17 big twins, *except 2017 touring models*

FEATURES AND BENEFITS
- Improves valve timing accuracy by eliminating timing chain lash
- Easy Start cams allow stock starter to start any engine
- No tensioner shoes to wear out or fail

OPTIONS
Which S&S Gear Drive Cam Kit to Order?
- If updating a stock chain drive system, it's easiest to order a complete kit. Includes:
  - Camshafts with inner gears
  - Outer cam drive gear kit
  - Camshaft installation kit
- If replacing cams in an engine already equipped with S&S gear drive cams, order cams with inner gears and reuse the existing outer gears. Camshaft installation kit for the appropriate model year is recommended.
- If installing a set of gear drive cams from another manufacturer, order S&S cam gear kits for the appropriate model year. Each kit provides the inner & outer cam gears. Camshaft installation kit for the appropriate model year is recommended.

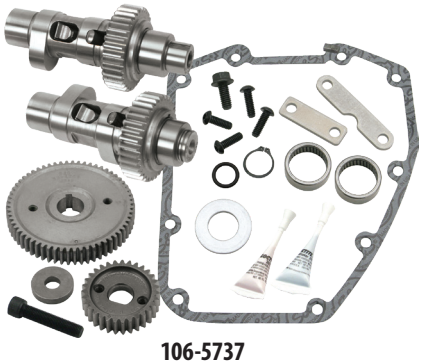

106-5737

GEAR DRIVE CAMS FOR 2007–'17 BIG TWIN MODELS *(EXCEPT 2017 TOURING MODELS)*

Cam Name	Easy Start Cams		Standard cams	
	Complete Kit**	Cams with Inner Gears†	Complete Kit**	Cams with Inner Gears†
	Stock Oil Pump	Stock Oil Pump	Stock Oil Pump	Stock Oil Pump
510	–	–	**33-5266**	**33-5246**
551	**106-5737**	**106-5736**	**106-4868**	**106-4870**
557*	**330-0057**	**330-0056**	**330-0109**	–
570	**106-5221**	**106-5220**	**33-5267**	–
583††	**106-5811**	**106-5810**	**330-0111**	–
585	**106-5225**	**106-5224**	**33-5268**	**33-5248**
625	**106-5229**	**106-5228**	**33-5269**	**33-5249**
640	**106-4850**	**106-4849**	**33-5270**	–
675	**106-5741**	**106-5740**	**330-0113**	–
MR103	**330-0303**	**330-0302**	–	–
HP103	**330-0354**	**330-0353**	**330-0350**	**330-0349**
635 H.O.	**330-0339**	**330-0338**	**330-0335**	**330-0334**

2006 Dyna® uses 2007-up style cams. **For Harley-Davidson® Tri Glide® models.* *†Installation kit not included but reccommended.*

DISCLAIMER: NOT LEGAL FOR SALE OR USE IN CALIFORNIA ON ANY POLLUTION CONTROLLED MOTOR VEHICLE. NOT LEGAL FOR SALE OR USE NATIONWIDE ON ANY FEDERAL POLLUTION CONTROLLED MOTOR VEHICLE UNDER THE CLEAN AIR ACT



106-6068

INSTALLATION KIT FOR S&S GEAR DRIVE CAM*

Models	Part #
2006 Dyna® and 2007–'17 big twins, *except 2017 touring models*	**106-6068**

*Includes a gearcover gasket, bearings, oil passage block-off kit, retaining ring, o-ring, thread lock and instructions. *This kit is included with all Complete Gear Drive Cam Kits.*



106-5723

Oil passage block-off kit

Use this kit to block oil passages in cam plate when hydraulic cam chain tensioners are removed to install gear drive cams. Fits any cam plate designed for hydraulic tensioners. This oil passage block-off kit is included in the cam installation kit, part #106-6068.

NOTES

††This cam kit is not for touring models and does not work with compression over 9.9 to 1.

Fuel injection tuning required.

Pinion shaft run-out must be checked before installing S&S® gear drive cams.

A hydraulic press and other professional tools are required to install S&S gear drive cams. Additionally, material must be removed from the inner surface of the stock gearcover. The stock crankcase may require clearancing for S&S .625", .640", and .675" lift cams. S&S recommends that gear drive cams be installed by a professional mechanic.

Due to the inheraent characteristics of gear drives, you may experience more valve train noise with gear driven cams. Oversized and undersized gears are available to help achieve correct gear lash. We have found that with 160 lb. of valve seat force, the S&S gear drive cams will perform well up to 6200 rpm. If higher rpm is anticipated, valve springs that provide higher seat force should be used.

S&S can do a special order cam. Contact your S&S Customer Service Representative for more information.

CHAIN DRIVE CAM KITS

FITMENT
- 2006 Dyna® and 2007–2017 big twins, *except 2017 touring models*

FEATURES AND BENEFITS
- Great way to increase performance at an affordable price
- Quick installation—reuse many stock components
- Easy Start cams allow stock starter to start any engine

S&S exclusive EASY START CAMS US PATENT 7,699,035

KIT CONTENTS
- Cams
- Installation Kit: gearcover gasket, bearings, retaining ring, o-ring, thread lock
- Instructions

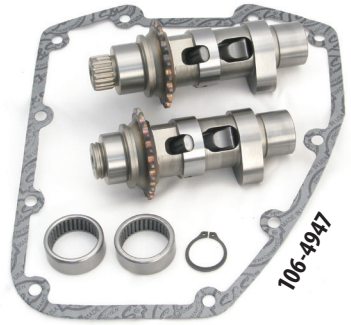

S&S CHAIN DRIVE CAM KITS FOR 2007–'17 BIG TWIN MODELS
(EXCEPT 2017 TOURING MODELS)

Cam Name	Standard	Easy Start
OES	**330-0293**	–
510	**106-4380**	–
551	**106-4858**	**106-4947**
557*	**330-0105**	**330-0053**
570	**106-4381**	**106-5234**
583††	**330-0106**	**106-5807**
585	**106-4382**	**106-5233**
625	**106-4383**	**106-5239**
640	**106-4399**	**106-5235**
MR103	**330-0470**	**330-0299**
HP103	**330-0343**	**330-0346**
635 H.O.	**330-0328**	**330-0331**

Note: 2006 Dyna® uses 2007-up style cams. **For Harley-Davidson® Tri Glide® models.*

DISCLAIMER: NOT LEGAL FOR SALE OR USE IN CALIFORNIA ON ANY POLLUTION CONTROLLED MOTOR VEHICLE. NOT LEGAL FOR SALE OR USE NATIONWIDE ON ANY FEDERAL POLLUTION CONTROLLED MOTOR VEHICLE UNDER THE CLEAN AIR ACT

REPLACEMENT INSTALLATION KIT FOR S&S CHAIN DRIVE CAM*

Models	Part #
2006 Dyna® and 2007–'17, *except 2017 touring models*	**106-5929**

Includes a gearcover gasket, cam bearings, retaining ring, o-ring, thread lock and instructions.
**This kit is included with all S&S Chain Drive Cam Kits.*

NOTES

††This cam kit is not for touring models and does not work with compression over 9.9 to 1.

Fuel injection tuning required.

551, 557, & 583 cams are not recommended with compression ratio of 10:1 or higher.

OES & 510 cam recommended over 9.7:1

S&S can do a special order cam. Contact your S&S Customer Service Representative for more information.

CAM RELATED REPAIR PARTS


33-4285


33-4160Z


31-4499

REPLACEMENT GEARS* FOR 2006 DYNA® AND 2007–'17 MODELS
(EXCEPT 2017 TOURING MODELS)

Description		Part #
Outer cam drive gear only		**330-0621**
Front inner cam gear		**330-0593**
Rear inner cam gear	Standard	**330-0593**
	Undersized	**330-0594**
	Oversized	**330-0595**
Pinion Gears	Standard	**330-0622**
	Undersized	**330-0626**
	Oversized	**330-0627**

**Due to machining variations in the stock cam plate, oversized or undersized gears may be needed to achieve correct gear lash.*

CAM GEAR DRIVE KIT

Fitment	Part #
2006 Dyna® and all 2007–'17 models, *except 2017 touring models*	**33-4285**

Includes front and rear inner cam gears, pinion gear, and outer cam gear

OUTER CAM GEAR DRIVE KIT

Fitment	Part #
2006 Dyna® and all 2007–'17 models, *except 2017 touring models*	**33-4268**

Includes 2 outer gears and hardware

REPLACEMENT HARDWARE FOR OUTER CAM GEAR DRIVE

Description	Part #
Hardware Kit for 2006 Dyna® and all 2007–'17 models, *except 2017 touring models*	**33-4271P**
Replacement Key for 2006 Dyna® and all 2007–'17 models, *except 2017 touring models*	**106-1348**

CAM NEEDLE BEARINGS ASSEMBLIES

Description		Part #
Inner Cam Bearing USA	*each*	**31-4199-S** *9215*
	2 pack	**31-4499** *9215*

All reference to HD® part numbers is for identification purposes only. We in no way are implying that any of S&S Cycle's products are original equipment parts or that they are equivalent to the corresponding HD® part number shown.

CAM CHEST UPGRADE
GEAR OR CHAIN DRIVE



FITMENT
- 2007–'17 Harley-Davdison® big twins *(except 2017 touring)* & 2006 Dyna® models

FEATURES
- Upgrade to S&S bolt-in performance chain drive or gear drive camshafts
- Improved engine performance—higher lift and optimized cam timing
- S&S Quickee pushrods—easy installation, without removing rocker covers
- Replace stock oil pump, cam support plate, cams, chain tensioners, and tappets with all new premium U.S. made S&S components
- Better, more consistent oil pressure

CHAIN DRIVE CAM CHEST UPGRADE KIT FOR 2007–'17 BIG TWIN *(EXCEPT 2017 TOURING)* & DYNA® MODELS

Fitment	Cam	Part #
2007–up bt and 2006 Dyna models	551CE Easy Start	**330-0544**
	583CE Easy Start	**330-0545**††
	585CE Easy Start	**330-0546**
	585C Standard	**330-0553**

DISCLAIMER: NOT LEGAL FOR SALE OR USE IN CALIFORNIA ON ANY POLLUTION CONTROLLED MOTOR VEHICLE. NOT LEGAL FOR SALE OR USE NATIONWIDE ON ANY FEDERAL POLLUTION CONTROLLED MOTOR VEHICLE UNDER THE CLEAN AIR ACT

GEAR DRIVE CAM CHEST UPGRADE KIT FOR 2007–'17 BIG TWIN *(EXCEPT 2017 TOURING)* & DYNA® MODELS

Fitment	Cam	Part #
2007–up bt and 2006 Dyna Models	510G Standard	**310-0814**
	551GE Easy Start	**310-0815**
	585GE Easy Start	**310-0816**

DISCLAIMER: NOT LEGAL FOR SALE OR USE IN CALIFORNIA ON ANY POLLUTION CONTROLLED MOTOR VEHICLE. NOT LEGAL FOR SALE OR USE NATIONWIDE ON ANY FEDERAL POLLUTION CONTROLLED MOTOR VEHICLE UNDER THE CLEAN AIR ACT

NOTES

††This cam kit is not for touring models and does not work with compression over 9.9 to 1.

551 & 583 cams are not recommended with compression ratio of 10:1 or higher.

HYDRAULIC CAM CHAIN TENSIONER KIT

FITMENT
- 2007–'17 *except 2017 touring* & 2006 Dyna® models
- 1999–'06 models with hydraulic cam plate upgrade

HYDRAULIC CAM CHAIN TENSIONER KIT

Fitment	Part #
2007–'17 *except 2017 touring models*	**330-0518**



FEATURES
- Thicker shoe for longer wear
- Direct chain oiling
- Larger piston
- Tighter tolerance for improved stability
- Made in USA

REPLACEMENT PARTS

Description	Part #
Tensioner,Asm,Inner,Body,Cam Chain	**330-0519**
Tensioner,Assembly,Outer,Body,Cam Chain	**330-0520**
Tensioner Shoe,Chain,Camshaft	**330-0521**

NEW FOR 2020 PRECISION TAPPETS

High performance tappets are a cornerstone of the S&S line up and we are always looking to improve our products. After months of research and countless hours of testing we are excited to reveal the latest in performance tappets. The S&S Cycle Precision Tappets replace both our standard as well as premium tappets. Each Precision Tappet is hand assembled to exacting tolerances and designed for quiet operation and rapid pump up and all are made in the USA.

FITMENT

- 1999–2017 big twins
- S&S T-Series engines

FEATURES

- Reduced valve train noise from start up to shut down
- Close tolerances for low leak down rates
- Fast pump up and superior high rpm performance

PRECISION TAPPETS

Set of 4 tappets	**330-0718**



TAPPET COVERS

FITMENT

- 1999–'17 big twins, *except 2017 touring models*
- S&S crankcases

KIT CONTENTS

- Covers
- Gaskets
- Installation hardware

FEATURES AND BENEFITS

- CNC billet aluminum provides extra strength and dimensional stability over a wide temperature range
- Simple to install upgrade that looks great



33-5601

TAPPET COVER KITS

Finish	Part #
NEW FOR 2020 Gloss Black	**330-0588**
Polished	**33-5601** USA
Chrome	**106-3883**±
NEW FOR 2020 Gloss Black 4 3/8" style	**330-0589**
Chrome 4 3/8" style	**330-0281**±

±⚠WARNING: Cancer and Reproductive Harm – www.P65Warnings.ca.gov

REPLACEMENT PARTS FOR TAPPET COVERS

Descriptions		Part #
Gasket	*each*	**33-5303-S** *18635-99B*
	2 pack	**33-5303-2** *18635-99B*
Tappet Cover Gasket 4 3/8" style	*each*	**330-0282**
Screw w/flat washer, Zinc	*each*	**50-0092-S** *4741A*
	4 pack	**50-0092P** *4741A*
Screw, Chrome	*each*	**50-0482**±
Washer, Flat, Chrome	*each*	**50-7017**±

±⚠WARNING: Cancer and Reproductive Harm – www.P65Warnings.ca.gov

All reference to HD® part numbers is for identification purposes only. We in no way are implying that any of S&S Cycle's products are original equipment parts or that they are equivalent to the corresponding HD® part number shown.

TIME-SAVER ADJUSTABLE PUSHRODS

FITMENT
- 1999–'17 big twins, *except 2017 touring models*

FEATURES AND BENEFITS
- No need to remove rocker arms to install
- Speeds up installation of cams and rockers arms
- Makes upper-engine work easy!
- Can be installed with stock pushrod tubes

TIME-SAVER ADJUSTABLE PUSHRODS

Description	Part #
Pushrod Set	**930-0053**

QUICKEE ADJUSTABLE PUSHRODS

GLOSS BLACK ALSO AVAILABLE

FITMENT
- 1999–'17 big twins *(except 2017 touring models)* w/stock engine height +/- .050"

FEATURES AND BENEFITS
- Adjustable to accommodate all tappets and cam base circle diameters and engine heights
- Easy to install—removal of rocker arms not needed
- No threads on wrench flats
- Also available in gloss black

KIT CONTENTS
- Pushrods, gloss black or chrome pushrod covers, o-rings, and cover keepers

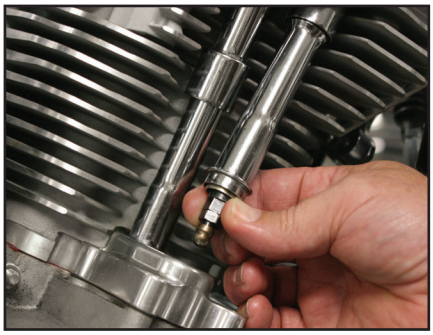

When a Quickee adjustable pushrod is collapsed, it can easily be installed or removed from an assembled engine.



930-0143

QUICKEE ADJUSTABLE PUSHRODS

Description	Part #
Gloss Black Pushrod Kit *(includes black pushrod covers, o-rings & cover keepers)*	**930-0143**
Chrome Pushrod Kit *(includes chrome pushrod covers, o-rings & cover keepers)*	**106-6051** ±
Pushrods Only*	**93-5122**

Longer keepers are required for taller than stock engines. page 97 of this catalog for pushrod cover keepers.
**1984-'99 style pushrod covers are required for access to the Quickee Adjustable Pushrod adjusters in 2007–'12 big twins. page 97 for pushrod covers.*
± WARNING: Cancer and Reproductive Harm – www.P65Warnings.ca.gov

STANDARD ADJUSTABLE PUSHRODS

FITMENT
- 1999–'17 big twins, *except 2017 touring models*
- Lengths available for various displacements

FEATURES AND BENEFITS
- Adjustable to accommodate all tappets & cam base circle diameters

KIT CONTENTS
- Pushrods, chrome pushrod covers, tappet cover gaskets, o-rings, cover keepers

93-5095±



STANDARD ADJUSTABLE PUSHRODS FOR HARLEY-DAVIDSON® TWIN CAM 96™/103™

Displacement	Engine Height	Cylinder Length	Pushrod Kit	Pushrods Only	Pushrod Covers	Cover Keepers
96", 103", 106"	Stock	4.937"	**93-5095**±	**93-5096**	**106-1340**±	**93-4100**
124"	+.096"	5.013"	–	**93-5098**	**106-1340**±	**93-4115**
143"	+.2875"	5.057"	–	**930-0103**	**106-1340**±	**93-4102**

**Custom, extra long stainless steel 4.250", customer to cut to required length*
± WARNING: Cancer and Reproductive Harm – www.P65Warnings.ca.gov

NON-ADJUSTABLE PUSHRODS

FITMENT

- 2007–'17 Harley-Davidson® Twin Cam 96™ and 103™ big twin enginess, *except 2017 touring models*
- S&S T111 Engines

FEATURES AND BENEFITS

- Replaces stock pushrods perfectly
- 7⁄16" high strength chromoly steel tubing for increased strength
- Pushrods are marked with stock color code and valve position for easy installation



NON-ADJUSTABLE PUSHRODS

Description	Part #
Pushrods Only *(stock replacement)*	**930-0046**
Replacement Pushrods for S&S T111	**930-0144**

PUSHROD COVERS & RELATED PARTS

PUSHROD REPLACEMENT PARTS

Description		Part #
Pushrod Cover Kit *(includes top & bottom covers, cover cap, cover spring, spring washer, & o-rings for four pushrods)* USA	Chrome	**106-1340**
	Gloss Black	**930-0124**
Top Cover USA USA 1,2,3		**93-4016** *17935-66T, 17935-79B*
Bottom Cover USA USA 1,2,3		**93-4015** *17938-83*
Cover Cap USA USA 1,2,3		**93-4017** *17945-36B*
Cover Spring USA USA 1,2,3		**93-4018** *17947-36*
Cover Cap Washer		**50-7131** *6762B*
Pushrod O-ring Kit *(includes top, middle, & bottom o-rings for four pushrods)*		**93-4022** *11293, 11157, 11101, 11190*
Top O-ring		**50-8039**
Middle O-ring		**50-8038** *11132A*
Bottom O-ring		**50-8037** *11145A*



93-4016



93-4015



93-4017



93-4018



50-7131

PUSHROD COVER KEEPER SETS FOR 2007–'17 BIG TWINS

Length / Finish		S&S Tubes	Part #
2.390" / Gloss Black			**930-0127**
2.400" / Chrome USA		All stock height TC 96/103	**93-4070**± *17950-48*
2.500"	Chrome	96", 100", 117", 103", 106" HSU	**93-4100**±
	Gloss Black		**930-0142**
2.600"	Chrome	124"	**93-4101**±
	Gloss Black		**930-0128**
2.800" / Chrome USA			**93-4115**± *17950-86*
2.900"	Chrome	143"	**93-4102**±
	Gloss Black		**930-0126**
3.000" / Chrome			**93-4103**±
3.100"	Chrome		**93-4104**±
	Gloss Black		**930-0125**
3.200" / Chrome			**93-4105**±
3.330" / Chrome USA			**93-4106**± *17949-40, 17950-66*
3.500" / Chrome			**93-4107**±
3.625" / Chrome			**93-4108**±
4.250"*			**93-4109**

**Custom, extra long stainless steel 4.250", customer to cut to required length*

± WARNING: Cancer and Reproductive Harm – www.P65Warnings.ca.gov



93-4101

All S&S pushrod keepers are chromed steel, except part #93-4109. Keeper part #93-4109 is intended for unusually tall engines. It is manufactured of unchromed stainless steel to prevent rust or peeling after it is trimmed to the required length.

All reference to HD® part numbers is for identification purposes only. We in no way are implying that any of S&S Cycle's products are original equipment parts or that they are equivalent to the corresponding HD® part number shown.

660" & 720" VALVE SPRINGS KITS FOR B3 HEADS

FITMENT

Modified Harley-Davidson® 1984–up big twin and 1986–'03 Sportster® Models For S&S® Super Stock®, Special Application, or other heads which can accept a larger than stock O.D. outer spring. Stock spring O.D. is approximately 1.400". See descriptions below for outer spring O.D. of specific spring kits. S&S racing valve springs are designed to be used with "no shoulder" style valve guides. Special keepers fit stock 5⁄16" diameter stemmed valves and S&S collars only. Pro Stock spring kits include keepers for valves with 11⁄32" or 5⁄16" stems.

KIT CONTENTS

4 titanium top collars, 4 bottom collars, 4 outer, 4 middle, and 4 inner valve springs, 8 valve keepers, 4 each .015" shims and .030" shims.

.660" LIFT TRIPLE VALVE SPRING KIT WITH TITANIUM TOP COLLARS

- Typically used with cast iron guides
- 1.900" installed height
- 1.550" O.D. outer spring, middle spring is flat style and serves as a harmonic dampener
- Valve spring seat pressure equals 210 lbs
- Open pressure @ .660" is about 520 lbs
- Coil bind @ 1.175"

.720" LIFT TRIPLE VALVE SPRING KIT WITH TITANIUM TOP COLLARS

- Typically used with bronze guides
- 1.975" installed height
- 1.570" O.D. outer spring
- Valve spring seat pressure 216 lbs
- Valve spring open pressure @ .720" is 540 lbs
- Coil bind @ 1.130"

VALVE SPRING REPLACEMENT PARTS:
SEE PAGE 130



90-2079

.660" & 720" LIFT VALVE SPRING KIT FOR B3 HEADS

Description	Part #
.660" Lift Triple Valve Spring	**90-2079**
.720" Lift Triple Valve Spring	**90-2080**

REPLACEMENT PARTS

Description		Part #
Top collar - titanium .660"/.720" lift		**90-2155A**
Bottom collar - .660"/.720" lift	*each*	**90-2090**
Valve keeper 5⁄16" valve stem SA	*each*	**90-2153A**
Shim - .015"	*each*	**90-2086**
	5 pack	**50-7161**
Shim - .030"	*each*	**90-2087**
	5 pack	**90-2198**

NOTE The .660" lift kit (90-2079) can be used to replace the S&S spring combination installed in early .630" lift S&S heads. Requires the use of S&S .085" longer intake valve 90-2004 and exhaust valve 90-2005.

650" VALVE SPRINGS KITS FOR B2 HEADS

FITMENT

- S&S® B2 heads

FEATURES AND BENEFITS

- Works well with cams up to .650" lift
- Manufactured from ultra clean high silicon Kobe alloy wire then micro shot peened and nitrided
- High performance conical single wire spring
- Chromoly forged retainers

KIT CONTENTS

- Valve keepers, top & bottom collars, springs, shims



S&S®.650" LIFT VALVE SPRING KIT FOR B2 HEADS

Lift	Installed Height	Seat Force	Force @ Max Lift	Max RPM
.650"	1.860"	178 lb.	376 lb.	6500

.650" LIFT VALVE SPRING KIT FOR B2 HEADS

Description	Part #
Spring, Kit, Valve, Dual, .650", Chrome Silicone Steel, 1984-2004 bt, 1986-2003 xl	**900-0050**

SIDEWINDER® .650" VALVE SPRINGS

FITMENT
- Stock 2005–'17 Twin Cam 96™/103™ big twins *(except 2017 touring models)* with 7mm valve stems
- All S&S CNC ported heads

S&S® .650" LIFT VALVE SPRINGS SPECIFICATIONS				
Lift	Installed Height	Seat Force	Force @ Max Lift	Max RPM
.650"	1.860"	178 lb.	376 lb.	6500

FEATURES AND BENEFITS
- Works well with cams up to .650" lift
- Manufactured from ultra clean high silicon Kobe alloy wire then micro shot peened and nitrided
- CNC machined 9˚ locks
- High performance conical single wire spring
- Chromoly forged retainers

KIT CONTENTS
- Valve keepers, Top & Bottom collars, Springs, Shims



.650" LIFT VALVE SPRING KIT

Description	Part #
2005–'17 big twins (7mm stems) *except 2017 touring models*	**106-5909**

NOTE

S&S recommends roller rocker arms be used with lifts over .585"

STREET PERFORMANCE .585" VALVE SPRINGS

FITMENT
- 2005–'17 big twins with 7mm valve stemmed stock heads *(except 2017 touring models)*
- All S&S Super Stock Heads
- S&S CNC Ported Heads

S&S® STREET PERFORMANCE .585" VALVE SPRINGS SPECIFICATIONS			
Lift	Installed Height	Seat Force	Force @ Max Lift
.585"	1.850"	135 lb.	325 lb.

FEATURES AND BENEFITS
- Springs reduce the risk of valve float
- Suitable for high performance applications
- Accommodates camshaft lift to 0.585"

KIT CONTENTS
- Valve Guide Seals, Springs, Top & Bottom Collars, Keepers, Shims

STREET PERFORMANCE .585" VALVE SPRING KIT

Description	Part #
2005–'17 big twins (7mm stems) *except 2017 touring models*	**900-0594**
All S&S Super Stock Heads	**900-0595**
S&S CNC Ported Heads	**900-0596**



900-0594

VALVE SPRING REPLACEMETNT PARTS:
SEE PAGE 130

FORGED ROCKER ARMS

FITMENT

- 1999–2017 big twins *(except 2017 touring models)*

FEATURES AND BENEFITS

- **Roller Rocker Arms:**
- Extremely durable rollers reduce valve stem side thrusting with high lift cams
- Superior wear and fatigue resistance even in the most demanding applications
- ¾" long bushings provide 50% more bushing support area than ½" long bushings
- Available in stock 1.625:1 ratio or performance 1.725:1 ratio
- **Standard Rocker Arms:**
- ¾" long bronze bushings provide 50% more load bearing area than the ½" long bushings used in stock and other aftermarket rocker arms
- Case carburized hard surface for longer life
- Stock 1.625:1 ratio



900-4065A

KIT CONTENTS

- 2 front and 2 rear rocker arms

FORGED ROLLER ROCKER ARM KIT

Description		Part #
2 front and 2 rear rocker arms	1.625:1	**900-4065A**
	1.725:1	**900-4098A**

Adjustable pushrods must be used with S&S roller rocker arms to obtain proper valve clearance.
New rocker arm shafts are recommended for maximum performance and rocker life.



900-4119A

STANDARD FORGED ROCKER ARM KIT

Description		Part #
2 front and 2 rear rocker arms	1.625:1	**900-4119A**

New rocker arm shafts are recommended for maximum performance and rocker life.

ROCKER ARM SHAFTS

Description	Part #
Set of 4	**90-4036** *17611-83B*
Individual	**90-4006** USA 1,2,3 *17611-83B*



90-4036

New rocker arm shafts are recommended for maximum performance and rocker life.

REPLACEMENT PARTS FOR FORGED ROCKER ARMS

Rocker Arm Type	Description	Part #
Roller	Front exhaust or rear intake rocker arm	**900-4065FA** USA 1,2,3
	Rear exhaust or front intake rocker arm	**900-4065RA** USA 1,2,3
Standard	Front exhaust or rear intake rocker arm	**900-4119FA** *17375-83A*
	Rear exhaust or front intake rocker arm	**900-4119RA** *17360-83A*
Roller	Rebuild kits (rebuilds 4 rocker arms)	**90-4104**
Roller & Standard	Rocker arm bushing (¾" long)	**90-4014**



90-4104

NOTES

S&S roller rocker arms are recommended for use with cams having more than 0.585" of lift.
Adjustable pushrods must be used with S&S roller rocker arms to obtain proper valve clearance.
New rocker arm shafts are recommended for maximum performance and rocker life.

All reference to HD® part numbers is for identification purposes only. We in no way are implying that any of S&S Cycle's products are original equipment parts or that they are equivalent to the corresponding HD® part number shown.

B2 HEADS WITH STOCK BOLT PATTERN

Kits do not include gaskets, hardware, or intake and exhaust flanges. These parts must be purchased separately.

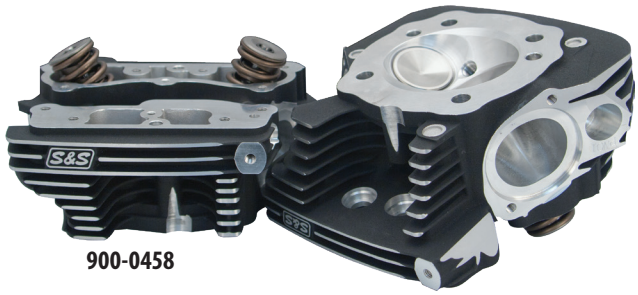

900-0458

FITMENT

- 1999–'17 big twin engines *(except 2017 touring models)* 4⅛" bore, stock bolt pattern (in stock, off-the-shelf*)
  - *S&S only stocks the late model 4⅛" bore versions as off-the-shelf items, but heads for other applications and individual front of rear replacement heads are available by special order.
- 1999–'17 big twin engines *(except 2017 touring models)* 4⅛" bore and larger with S&S or other bolt pattern (special order only)
- 1984–'99 big twin engines 4⅛" bore and larger (special order only)
- Not compatible with Twin-Cooled™ models

FEATURES AND BENEFITS

- 106cc combustion chambers
- Oval intake ports bolt up to S&S Throttle Hog 70mm throttle bodies (2008–up touring applications only)
- Stock style breather system—compatible with stock and aftermarket air cleaners
- Large 2.200" intake and 1.800" exhaust valves
- .660" lift S&S valve springs with titanium top collars
- Machined for stock sensors—EFI ready
- Available in Wrinkle Black or Silver powder coat
-

OPTIONS BY SPECIAL ORDER

- CNC ported intake and exhaust ports—more air, more power!
- Two-bolt exhaust flanges—Can accommodate stock exhaust headers, existing 2" headers, or build your own 2" exhaust system
- Machined for 2008-later bagger front motor mount
- Select heads for 1984–'99 or 1999–'17 big twin style, or 1986–'03 XL
- 4⅛" to 4⅜" bore sizes
- Stock 1999–'17, S&S, or other cylinder stud patterns—other patterns subject to approval
- Machined with or without S&S electric compression release
- Choose from a variety of pushrod geometry machining styles
- Choose from a variety of different chamber sizes
- Individual front of rear heads available by special order

B2 HEADS WITH STOCK BOLT PATTERN

Finish	Part #
Silver Powder Coat	**900-0450**
Wrinkle Black Powder Coat	**900-0458**
**Head Kits include valves and valve springs. Head sets w/o valves or springs individual front or rear heads are available by special order.*	
Special Order B2 Cylinder Heads	**106-6385***

**Download the Special Order Form at sscycle.com/soforms*

ADDITIONAL PARTS REQUIRED

Product Description		Part #
Special 4⅛" Bore Pistons & Ring Set	Standard	**92-1580**
	+.010"	**92-1581**
Special Length Pushrods (+.250")	For 124" engines	**93-5106**
	Stock height engines	**93-5098**
Intake Manifold Flange Kits	All B2 heads	**16-0250**

**Download the Special Order Form at sscycle.com/soforms*

REPLACEMENT PARTS: PAGE 127

NOTES

Heads are .230" taller than stock—requires special pushrods and/or frame clearancing or motor mount modifications

Exhaust pipe adaptor kits and other parts must be purchased separately. See "Additional Parts Required" chart, above.

DISCLAIMER: NOT LEGAL FOR SALE OR USE IN CALIFORNIA ON ANY POLLUTION CONTROLLED MOTOR VEHICLE. NOT LEGAL FOR SALE OR USE NATIONWIDE ON ANY FEDERAL POLLUTION CONTROLLED MOTOR VEHICLE UNDER THE CLEAN AIR ACT

SUPER STOCK® CYLINDER HEADS
WITH STOCK BOLT PATTERN

FITMENT
- 2006–2017 big twins, *except 2017 touring models*
- Not compatible with Twin-Cooled™ models

FEATURES AND BENEFITS
- Heads can be decked up to .060" to increase compression
- 79cc heads 1.940" intake and 1.575" exhaust valves
- 89cc heads have 2.000" intake and 1.605" exhaust valves
- 91cc heads have 2.000" intake and 1.605" exhaust valves
- S&S 89cc heads have a whopping 264cfm flow rate (*compared to 182cfm for stock HD® heads)*
- S&S .585" or .650" lift valve springs
- Must use the included S&S valve cover gasket kit part #90-4120 with stock rocker covers
- 2006–'17 heads are machined for 2008–'17 FL top motor mount
- Includes 4 long headbolts for installation
- Compatible with stock rocker boxes, exhaust and intake manifolds
-

OPTIONS
- Compression release machining or without compression release machining *(Compression release machining for S&S compression releases)*
- Silver, Wrinkle Black, or Stone Gray powder coat finish

COMPRESSION RATIOS FOR S&S® SUPER STOCK® CYLINDER HEADS FOR 2006–'17 BIG TWINS *(EXCEPT 2017 TOURING MODELS)*

Configuration	96"	103"	106" Big Bore	110"	111"	117"	124"
79cc	9.8	10.2/11.1*	10.6	10.8	–	–	–
89cc	8.9	9.3/10.1*	9.7	9.8	–	–	–
91cc	–	–	–	9.6	9.75	10.3	10.8

**S&S pop-up piston*



106-3233

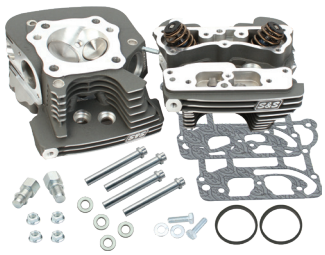

900-0666

SUPER STOCK® CYLINDER HEAD KITS FOR 2006–'17 BIG TWINS

Description	Chamber Volume	Manifold** Surface	Compression Release Machining	Springs	Finish	Part #
2006–'17 big twins *except 2017 touring models*	79cc		●	.650"	Silver	**106-3227**
			●	.650"	Wrinkle Black	**106-3233**
2006–'17 big twins *except 2017 touring models*	89cc		●	.650"	Silver	**106-3255**
	89cc		●	.650"	Wrinkle Black	**106-3240**
2006–'17 big twins, 2008–'16 touring models S&S 124" Hot Set Up Kits	91cc	+.032"	●	.650"	Silver	**106-4278**
		Stock		.650"		**900-0344**
		+.032"		.650"		**900-4278**
	91cc	-.064		.650"	Wrinkle Black	**900-0993**
	91cc	+.032"	●	.650"	Wrinkle Black	**106-3249**
		Stock		.650"		**900-0349**
		+.032"		.650"		**900-3249**
					Stone Gray	**900-0666**

***In order to accommodate the change in engine height on S&S 124" engines and still use a stock length manifold, S&S added material to the surface for proper sealing of manifold to cylinder head.*

DISCLAIMER: NOT LEGAL FOR SALE OR USE IN CALIFORNIA ON ANY POLLUTION CONTROLLED MOTOR VEHICLE. NOT LEGAL FOR SALE OR USE NATION-WIDE ON ANY FEDERAL POLLUTION CONTROLLED MOTOR VEHICLE UNDER THE CLEAN AIR ACT

All other Specifications and finishes are available through Special Order **90-1060***

**Special Order: Download the Special Order Form at sscycle.com/soforms*

TOP END GASKET KITS FOR 1999–'17 BIG TWINS *(EXCEPT 2017 TOURING MODELS)*

3⅞" & 3.927" Bore	4" Bore	S&S 4⅛" Bore (Graphite)	Stock 4⅛" Bore (Layered Steel)
910-0465	**90-1913**	**90-1910**	**90-1914**

Includes a set of head and base gaskets, exhaust gaskets, and o-rings.

NOTES

79cc heads

When 79cc stock compatible heads are used with stock HD® pistons, TDC lifts of up to .186" for intake and .179" for exhaust and can be used without additional valve pocket clearancing. This allows the use of S&S® 510, 570, and 585 camshafts. If cams with higher TDC lifts are used, or if the heads are decked, piston valve pocket machining will be required.

79cc heads may be decked as much as .060" to increase compression. If heads are decked, piston valve pockets must be re-machined.

Moderate valve spring force in S&S Super Stock® cylinder heads allows the use of camshafts designed for the stock style chain cam drive system. However, for maximum reliability and performance we recommend the S&S gear drive cams.

Must use S&S rocker base gasket kit part #90-4120 with stock rocker covers.

79cc Heads should not be used with any piston having a pop up dome.

89cc heads

If 89cc heads are used with stock pistons, valve reliefs must be machined in the pistons due to larger valve size.

89cc heads may be decked as much as .060" to increase compression. If heads are decked, valve-to-piston clearance must be checked. If stock pistons are used, valve pockets must be re-machined.

Moderate valve spring force in S&S® Super Stock® cylinder heads allows the use of camshafts designed for the stock style chain cam drive system. However, for maximum reliability and performance we recommend the S&S gear drive cams.

A larger intake manifold is recommended to supplement the heads in order to let them flow to their full potential.

Must use S&S rocker base gasket kit part #90-4120 with stock rocker covers.

91cc heads

By changing the profile and shape of the cooling fins on our heads for 4⅛" bore engines, a large reduction in the transmission of mechanical noise was found. This not only benefits our TÜV certified engines and our EPA approved engines, but our performance engines as well!

Since April 1, 2007, these redesigned heads have been installed on all S&S 4⅛" bore engines and Hot Set Up Kits.

Replacement heads of the old style are available by special order.

Must use S&S valve cover gasket kit part #90-4120 with stock rocker covers.

MANIFOLD RECOMMENDATIONS

S&S single bore throttle body and manifold are recommended for engines with Magneti Marelli® fuel injection.
Due to the change in manifold flange mounting bolt pattern, stock flanges and S&S seal part #16-0235 must be used. The Screamin' Eagle® 58mm throttle body/manifold may also be used on 2006-'09 engines.
We recommend the stock 50 mm throttle body or S&S Throttle Hog 58mm throttle body/manifold for 2008-up touring models with Electronic Throttle Control (ETC).

REPLACEMENT PARTS: SEE PAGE 128

IMPORTANT MANIFOLD INFORMATION

In 2006, Harley-Davidson® changed the bolt pattern of the flanges that connect the manifold to the cylinder heads for all big twin engines. The pattern was changed from an offset bolt pattern to a symmetrical bolt pattern, so flanges can fit either the front or rear cylinder head. In addition, the intake port was moved slightly toward the drive side of the engine, making the port-to-port distance of the intake manifold slightly shorter. S&S® heads for 2006–up big twins are machined with the symmetrical bolt pattern and relocated port to allow for the fitment of stock manifolds. In 2008, Harley-Davidson touring models were equipped with electronic throttle control (ETC). The throttle body and manifold used on these engines is a one-piece unit that contains a servomechanism to control the position of the throttle plate. S&S recommends the S&S Throttle Hog throttle body for this application, see page 107. This limits the cylinder length of engines using an ETC manifold/throttle body to stock length because the ETC manifold/throttle body units are only available in stock length. However, S&S does supply specially machined cylinder heads for our 124" Hot Set Up Kit® for 2008 and later baggers, which allows the use of a stock length manifold on these longer-than-stock engines.

CNC PORTED CYLINDER HEAD SERVICES

FITMENT

- Available for 1999–2017 big twin engines, except 2017 touring models
- Ideal for 88"–124" engines (must use Screamin' Eagle® high flow injectors HD #27796-08 with stock throttle body, with kits over 107")
- Not compatible with Twin-Cooled™ models

FEATURES AND BENEFITS

- CNC machined ports for a consistent performance increase from stock heads
- Great throttle response, high velocity port without losing low RPM torque
- Assembled with performance valves and springs ready to bolt-on
- Choice of .585" or .650" lift valve springs
- Combustion chambers are available in the following volumes:
  - 83cc—Generally used for stock 88" up to 106" engine displacements
  - 85cc— Same as stock Twin Cam 88® and 96™ engine displacements
  - 87cc— Recommended for up to 117" engine displacements
  - 90cc— Generally used for 124" and up engine displacements
- Available in factory black or silver

S&S CNC PORTING SERVICE OPTIONS

REWORK SERVICE

- Send your stock heads to S&S
- Get the same set of heads back with CNC machined ports
- The best option for heads with a special cosmetic treatment
- Allow 1 week turn-around (does not include shipping)

CUSTOM CNC PORT DUPLICATION

- S&S can digitize your port design and machine it in your heads, ask an S&S customer service rep for details



WATCH THE S&S CNC PORTING VIDEOS AT SSCYCLE.COM/VIDEOS

CNC PORTING SERVICE

Fitment	Part #
1999–2017 big twins *(except Twin-Cooled™ & 2017 touring models)*	**106-5880**

DISCLAIMER: NOT LEGAL FOR SALE OR USE IN CALIFORNIA ON ANY POLLUTION CONTROLLED MOTOR VEHICLE. NOT LEGAL FOR SALE OR USE NATIONWIDE ON ANY FEDERAL POLLUTION CONTROLLED MOTOR VEHICLE UNDER THE CLEAN AIR ACT

S&S® CNC PORTING SERVICE SPECIFICATION COMPARISON

Heads	VALVE SIZE		Max Valve Lift	MAX TDC LIFT		PORT FLOW		Chamber Volume
	Intake	Exhaust		Intake	Exhaust	Intake	Exhaust	
Stock	1.805"	1.575"	.585"	–	–	216.2 cfm	191.8 cfm	85cc
CNC Ported by S&S	1.900"	1.610"	.650"	.230"	.215"	248.6 cfm	209.7 cfm	83cc**

**Flow testing performed on a SuperFlow® 1020 flow bench at 28" of water test pressure at .600" lift. Heads tested are 2006-'12 style.*

Heads	COMPRESSION RATIO								
	88"	95"	96"	97"	103"	106" Stroker	106" Big Bore	117" DD Piston	124" DD Piston
Stock	9.0:1	9.2:1	9.2:1	9.7:1	10.1:1	10.1:1	10.0:1	10.0:1	10.7:1
CNC Ported by S&S	9.2:1	9.4:1	9.4:1	9.9:1	10.3:1	10.3:1	10.2:1	10.2:1	10.9:1

***As a general rule of thumb, for every 1cc decrease in chamber volume equals a .1 increase in compression ratio.*

NOTES

CNC porting is not available for previously ported heads, heads that have been structurally damaged, or heads that are determined to be unserviceable during initial inspection. These heads will be returned to the customer without modification. In these cases, the customer will be notified and options will be reviewed. New, CNC ported stock heads or S&S heads are available for purchase.

Due to variations in stock cylinder head castings, all inside surfaces of the ports may not "clean up" during machining. As a result, the inside of one or more ports may not appear to be completely machined. This does not effect performance and is not considered a defect.

Fuel injection tuning required.

CNC porting is not currently available for Harley-Davidson® CVO engines or Screamin' Eagle® cylinder heads.

Must use Screamin' Eagle® high flow injectors, HD #27796-08, with kits over 106" with stock throttle body

S&S recommends using a S&S Throttle Hog throttle body when installing S&S CNC ported heads to achieve full horsepower performance potential. See page 107.

HEAD BOLTS WITH WASHERS

HEAD BOLTS

Bolt Length w/Washer	Washer Thickness	Head Bolt w/Washer	Washer Only
1.690"	.250"	**93-3028**	**50-7091**
1.840"	.150"	**93-3027**	**50-0418-S**
1.920"	.250"	**93-3036**	**50-7091**
2.070"	.150"	**93-3031** USA	**50-0418-S**
2.220"	.250"	**93-3038**	**50-7091**
2.370"	.150"	**93-3032**	**50-0418-S**
3.134"	.250"	**93-3029**	**50-7091**
3.284"	.150"	**93-3030**	**50-0418-S**
3.501"	.250"	**93-3037***	**50-7091**
3.651"	.150"	**93-3033***	**50-0418-S**
–	.150"	–	**50-0418-S**



93-3031

** Drilled & tapped deeper to allow shortening for custom lengths.*

HEAD BOLTS FOR HARLEY-DAVIDSON® TWIN CAM 96™ ENGINES

Engine Displacement	Stroke	Cylinder Length	Cylinder Head Type	Short Bolt w/Washer	Long Bolt w/Washer	Head Bolt Kit
Stock 96 and 103	4⅜"	4.937"	Stock HD®	**93-3031** USA	**93-3030** USA	**93-3014** USA
117" Big Bore	4⅜"	4.878"	S&S®	–	**93-3030** USA	**93-3070**
124" Big Bore Stroker	4⅝"	5.013" or 5.004"	Stock HD®	**93-3038**	**93-3037**	**93-3016**
			S&S®	–	**93-3037**	**93-3071**

CALCULATING CUSTOM HEAD BOLT LENGTH
SEE INSTRUCTIONS IN THE APPENDIX: PAGE 345

All reference to HD® part numbers is for identification purposes only. We in no way are implying that any of S&S Cycle's products are original equipment parts or that they are equivalent to the corresponding HD® part number shown

S&S® CHROME HEAD BOLT COVERS

Dress up your engine with these magnetic chrome head bolt covers. Easy installation, no tools, no messy adhesives. A powerful magnet holds cover in place, yet allows easy removal. Chrome plated steel looks great on any engine, but is a must for polished engines. For S&S head bolts only.



CHROME HEAD BOLT COVERS±

Description	Part #
Set of 4, for S&S Head Bolts only	**50-0333** USA

±⚠ WARNING: Cancer and Reproductive Harm – www.P65Warnings.ca.gov

DIE-CAST ROCKER COVERS

FITMENT

- 2007–'17 model big twins, *except 2017 touring models*



FEATURES AND BENEFITS

- Special rocker arm supports are included
- S&S rocker covers are finished with show-quality chrome
- Installation on stock and most comparable sized engines can be performed without removing the engine from the frame
- Clearanced to permit valve lifts up to .640" using S&S valve spring packages and stock rocker arms or S&S roller rocker arms
- S&S rocker covers accept valve springs up to 1.660" O.D. without modification
- Exclusive one way valve built into the rocker cover gasket to control oil carry over

KIT CONTENTS

- Front and rear covers
- All necessary gaskets and o-rings
- Mounting hardware

DIE-CAST ROCKER COVER KIT

Description	Part #
NEW FOR 2020 Gloss Black	**900-0937**
Chrome±	**90-4110** USA

±⚠ WARNING: Cancer and Reproductive Harm – www.P65Warnings.ca.gov

NOTES

If using valve spring packages with taller than stock installed height, some minor clearancing may be required.

Cylinder heads must be set up correctly for high lift cams, and it remains the builder's responsibility to confirm all clearances.

In most instances, only minor clearancing is required to use S&S rocker covers with valve springs larger than 1.660" O.D.

S&S® rocker covers are required if S&S cylinder heads are used with S&S electric compression releases.

REPLACEMENT PARTS: SEE PAGE 131

ANY JOB IS EASY WITH THE RIGHT TOOLS
S&S ROCKER COVER WRENCH SET, PAGE 325

THROTTLE HOG CABLE-OPERATED THROTTLE BODIES

S&S cable operated Throttle Hog Throttle bodies are available for 2002–'17 Harley-Davidson® big twins using cable operated throttles. Choose from 58mm for stock or mildly built engines, or the whopping 66mm Throttle Hog for big inch engines. More Air, More Power!

FITMENT

- 2006–'17 Harley-Davidson EFI big twins with cable controlled throttles
- S&S EFI Hot Set Up Kit® installations and T-Series Long Block engines with cable controlled throttles

FEATURES & BENEFITS

- More air flow for improved performance
- S&S Stealth air cleaners kit, with the proper bore sizes, are available
- Works with all air cleaner kits designed for throttle by wire engines with stock breather system
- One-piece design for easy installation and stock appearance
- Compatible with stock sensors, fuel rail, and throttle cables
- Black powder coat finish matches stock
- Sealed, stainless steel throttle shaft with dual roller bearings for smooth operation and no air leaks
- Kit includes hardened steel flanges and seals
- No stock throttle body exchange required!

THROTTLE HOG CABLE OPERATED THROTTLE BODIES FOR 2006-2017 BT

Year	Size (mm)	Engine Fitment	Manifold Size	Part #
2006–2017 bt	58	96", 103", 106", 107", 110", S&S 117" Hot Set Up Kit®, and 124" Hot Set Up Kit® *(w/S&S +.032" heads only)*** S&S T-Series Engines** *(Engines produced after 2013)*	405	**170-0346**
		S&S T-Series 111" Long Block Engines**	398	**170-0347**
		S&S T-Series 124" Engines with S&S bolt pattern, and 124" Hot Set Up Kit® *(w/stock or standard S&S heads)*** *(Engines produced before 2013)*	417	**170-0345**
	66	96", 103", 106", 107", 110", S&S 117" Hot Set Up Kit®, and 124" Hot Set Up Kit® *(w/S&S +.032" heads only)*** S&S T-Series Engines** *(Engines produced after 2013)*	405	**170-0349**
		S&S T-Series 111" Long Block Engines**	398	**170-0350**
		S&S T-Series 124" Engines with S&S bolt pattern, and 124" Hot Set Up Kit® *(w/stock or standard S&S heads)*** S&S T-Series Engines** *(Engines produced before 2013)*	417	**170-0348**

***Some S&S heads have additional material on the manifold surface to allow the use of a stock length manifold (405) on a 124" engine. If you are not sure which manifold should be rdered, check fitment with the stock manifold first.*

DISCLAIMER: NOT LEGAL FOR SALE OR USE IN CALIFORNIA ON ANY POLLUTION CONTROLLED MOTOR VEHICLE. NOT LEGAL FOR SALE OR USE NATIONWIDE ON ANY FEDERAL POLLUTION CONTROLLED MOTOR VEHICLE UNDER THE CLEAN AIR ACT

MAKE MORE POWER!

S&S Air Cleaner Kits
See page 64

REPLACEMENT FLANGE KITS
2006–2017 bt 160-0168



6.2 g/s FUEL INJECTORS for
2006–2017 Cable-operated Throttle Hogs 550-0749



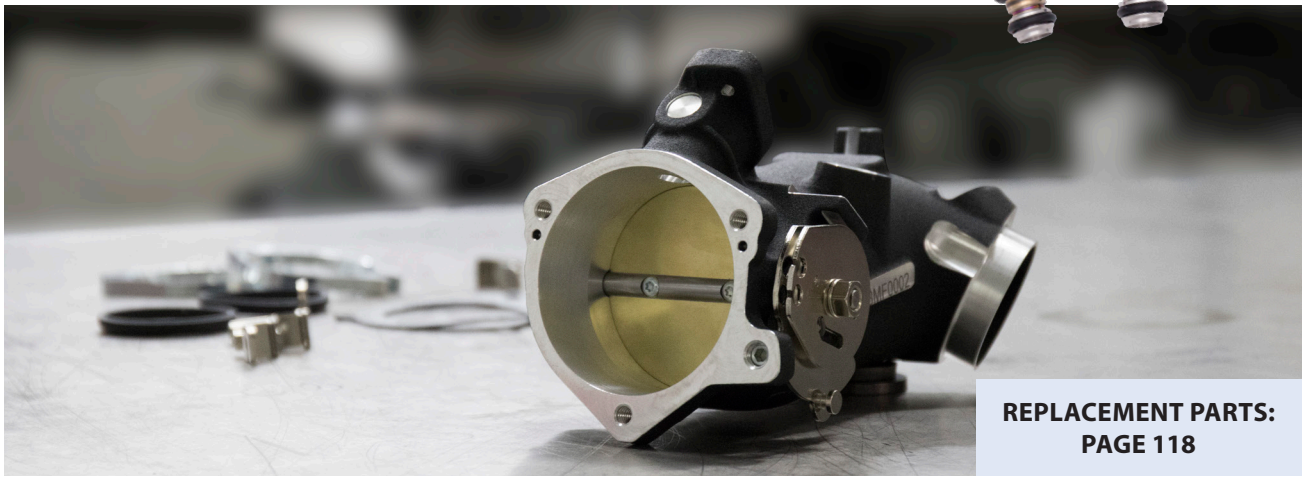

REPLACEMENT PARTS: PAGE 118

THROTTLE HOG THROTTLE BODIES



FITMENT

- 2008–2016 big twins w/throttle-by-wire
  (Except models equipped with the Twin-Cooled™ system)

FEATURES AND BENEFITS

- Increase in airflow for additional performance gains
- Meets the breathing needs of even the largest of engines
  — *choose from 58mm, 66mm, or 70mm*
- Increased manifold port I.D. 1.780"
- Economically priced compared to competitors
- Utilizes stock sensors and fuel rail
- Kit includes hardened steel flanges and seals
- All throttle-by-wire 58 & 66mm throttle bodies are machined to stock length intake manifolds (S&S manifold size 405) only

58MM Recommended for engines up to 110". Perfect with a S&S® 106" Big Bore kit

66MM Perfect pairing with a S&S 124" Hot Set Up Kit® or a 124" engine (when running cylinder heads with stock style round intake ports)

70MM Recommended for engines up to 145" displacement. S&S B2 and B3 cylinders heads are required to match the oval port configuration

ADDITIONAL PARTS REQUIRED

- Air cleaner (see chart for recommended air cleaner kits)
- High flow injectors P/N 550-0747
- A performance motorcycle tuning module.

SOLD ON EXCHANGE ONLY—HERE'S HOW IT WORKS

1. Your S&S® dealer sends your stock throttle body to S&S Cycle, Inc
2. S&S tests your incoming throttle body and its electrical components
   —a non-functional unit cannot be used and will be returned
3. S&S transfers your functional electrical components to your new S&S Throttle Hog
4. The complete Throttle Hog is tested and shipped to your S&S dealer
   (along with your original throttle body)
5. Your new Throttle Hog will typically be shipped within 2–3 days of receipt at S&S.

THROTTLE HOG THROTTLE BODIES AND AIR CLEANER KITS

Size	Throttle Hog Throttle Body ±	Stealth Air Cleaner Kits***	Backplate only*
58mm	**160-0034**	**170-0164**	**170-0167**
66mm	**160-0010**	**170-0165**	**170-0168**
70mm B2	**160-0112**	**170-0263**	**170-0247****

**If you already have a Stealth air cleaner for a stock throttle body, all you need is the backplate.*

DISCLAIMER: NOT LEGAL FOR SALE OR USE IN CALIFORNIA ON ANY POLLUTION CONTROLLED MOTOR VEHICLE. NOT LEGAL FOR SALE OR USE NATIONWIDE ON ANY FEDERAL POLLUTION CONTROLLED MOTOR VEHICLE UNDER THE CLEAN AIR ACT

***70mm B2 backplates do not have mounts to the cylinder head. A bracket must be fabricated to support the throttle body separately. Engine height determines if stock bracket can be used.*

**** These kits do not include an air cleaner cover.* *See page 64* *for S&S Stealth covers.*

± ⚠ WARNING: Cancer and Reproductive Harm – www.P65Warnings.ca.gov

6.2 g/s FUEL INJECTORS for
2008–2017 Throttle-by-Wire Throttle Hogs 550-0747



B3 APPLICATIONS FOUND ON PAGE 79

WARRANTY:
S&S THROTTLE HOG THROTTLE BODIES

S&S® Cycle, Incorporated warrants the S&S components of your S&S Throttle Hog throttle body to be free from defects in material and workmanship for a period of one year from the date of purchase by the original consumer customer. If parts become defective during the warranty coverage period, S&S will, at its option, repair or replace any, or all, defective parts. Repair or replacement of defective parts is the sole and exclusive remedy.

In the event that any OEM component re-utilized in the assembly of the throttle body fails, S&S may service the unit provided the OEM components are supplied to S&S at the time of service.

MANIFOLDS FOR SINGLE BORE EFI BIG TWIN ENGINES

FITMENT

- Stock height or taller than stock 2006–'15 bt, except 2008–2015 touring models
- S&S 52mm or 58mm throttle bodies
- Stock or S&S heads
- S&S T-Series Long Block engines

KIT CONTENTS

- Manifold
- O-ring intake seals
- VOES fitting cap



16-5139

MANIFOLDS FOR SINGLE BORE EFI 2007–'15 BIG TWIN ENGINES

Engine Displacement	Cylinder Length	Manifold Size	Part #
96", 103" & 106" (S&S engines with stock bolt pattern)	4.937"	405	**16-5134**
124" Hot Set Up Kit® (w/stock or standard S&S heads) **	5.004"	417	**16-5139**
124" Hot Set Up Kit® (w/S&S +.032" heads only)**	5.004"	405	**16-5134**
111" S&S T-Series Long Block Engines	4.754"	398	**16-5136**
117" Hot Set Up Kit®	4.878"	405	**16-5134**
124" S&S T-Series Engines, S&S bolt pattern	5.013"	417	**16-5139**

***Some S&S heads have additional material on the manifold surface to allow the use of a stock length manifold (405) on a 124" engine. If you are not sure which manifold should be ordered, check fitment with the stock manifold first.*

NOTES

S&S style o-rings must be used with these manifolds. S&S o-rings are slightly thinner to accommodate the larger S&S port diameter. Use of stock o-rings may cause damage.

2006–up models require seperate purchase of HD® intake manifold flanges pn 26993-06 *(1 pack)*.

SINGLE BORE EFI THROTTLE BODIES

52MM: Offering a 30% larger cross sectional area than stock throttle bodies, the S&S 52mm bore throttle body flows more than enough air for all but the most demanding street engines.

58MM: In response to constant requests for something bigger, S&S also offers a huge 58mm bore throttle body! Strictly for large displacement competition engines, this throttle body allows your engine to breathe easily and make more power! Recommended for S&S 106" big bore kit.

FITMENT

- 2006–'17 EFI big twins
  (except 2008–up touring & 2016–'17 Softail® models with electronic throttle control)

FEATURES AND BENEFITS

- Excellent performance
- Recommended tuning products:
  - S&S VFI
- Cruise control compatible with no extra bracket

OPTIONS

- 52mm
- 58mm

KIT CONTENTS

- Throttle body assembly
- Fuel injectors
- Fuel rail
- Harness adaptors
- All necessary hardware, gaskets, and hoses

SINGLE BORE EFI THROTTLE BODY KIT

Description	Part #
52mm Kit including Fuel Rail Kit	**17-5070**
58mm Kit including Fuel Rail Kit	**106-4408**

DISCLAIMER: NOT LEGAL FOR SALE OR USE IN CALIFORNIA ON ANY POLLUTION CONTROLLED MOTOR VEHICLE. NOT LEGAL FOR SALE OR USE NATIONWIDE ON ANY FEDERAL POLLUTION CONTROLLED MOTOR VEHICLE UNDER THE CLEAN AIR ACT

MAKE MORE POWER!
S&S® Stealth Air Cleaners on page 64
S&S Air Cleaner Kits for on page 69

NEW & IMPROVED!
CABLE-OPERATED THROTTLE HOGS
PAGE 106

NOTES

If you plan to use another programmable fuel injection module, it is best to consult the manufacturer to be certain that it is compatible with the S&S single bore system and has enough tuning capability for your engine configuration.

Requires S&S manifold and air cleaner assembly (order separately)



Stock

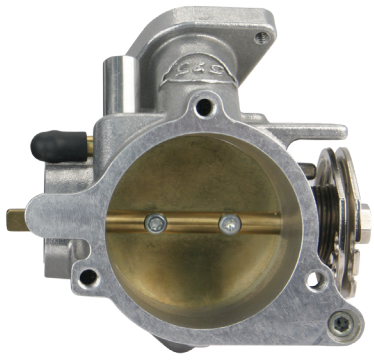

S&S 52mm

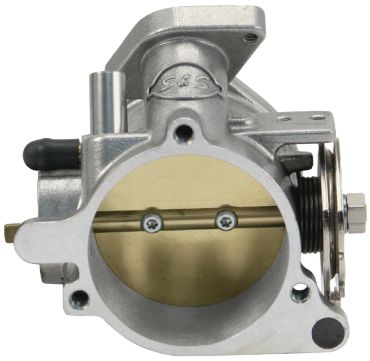

S&S 58mm

REPLACEMENT PARTS: SEE PAGE 119

COMPRESSION RELEASES

FITMENT

- S&S cylinder heads and rocker boxes for big twin with compression release machining
- Will not fit OEM heads

ELECTRIC RELEASE:

Solenoid operated, this system automatically opens and closes when the starter button is pressed and released. Convenient and simple, this is the best setup for big displacement high compression bikes. Requires S&S die cast rocker covers, page 105



55-1009



90-4915



53-0045



90-4916

COMPRESSION RELEASE KITS

Description	Part #
Electric	**90-4915**

TOOLS AND ACCESSORIES

Description		Part #
S&S Two-Piece Socket Kit: *Allows in-frame installation of S&S compression releases and protects wiring from damage during installation.*		**53-0045**
S&S Compression Release Hole Plug	*each*	**90-4916**
	2 pack	**90-4916-2**

REPLACEMENT PARTS

Description	Part #
Silicone Solenoid Caps	**55-1009**
Wiring Harness USA 2,3	**55-1010**
Electric Compression Release Assembly USA 2,3	**90-4914**

NOTES

S&S rocker covers must be used with electric compression releases due to clearance requirements for the solenoids.

Rocker covers must be removed when installing S&S® compression releases. If lack of frame clearance prevents removal of rocker covers, engine must be removed from frame for compression release installation.

In most cases, S&S compression releases can be installed while the engine is in the frame with the special S&S two-piece socket kit, part #53-0045 .

If cylinder heads are machined for S&S compression releases, but compression releases are not used, special plug part #90-4916 (two required) must be installed to seal the machined hole.

Stock cylinder heads cannot be machined for S&S compression releases because there is not enough material in critical areas.

VARIABLE FUEL INJECTION MODULES (VFI)

DELPHI® STYLE S&S® VFI MODULE

FITMENT

- 2001–'10 Harley-Davidson® EFI Softail® models
- 2002–'07 EFI touring models
- 2004–'11 EFI Dyna® models

IMPROVED FEATURES:

- New state of the art components replace outdated materials
- Improved waterproof housing
- More durable USB-C connector
- Faster processor for increased communication speed
- Protune II 4.0, available to download at sscycle.com/protune
- EC-approved

FEATURES AND BENEFITS

- Replaces stock Harley-Davidson® fuel injection modules—*plugs directly into stock wiring harness*
- ProTune II software is available for free download at: sscycle.com/protune
- Three stage engine overheat protection helps prevent possible engine damage
- Altitude compensation automatically adjusts for altitude variations
- Live tuning allows manual changes to maps while the engine is running
- Self diagnostics and actuator test functions help tuning and verify proper installation/operation
- Engine light can be programmed to function as a shift light
- Closed loop capable
- Optional closed loop sensor kit and knock sensor kit extend module capabilities
- Speedometer calibration function for 2004–up Harley-Davidson® models *(does not require installation of separate speedometer calibrator)*

CLOSED LOOP CAPABILITY

When equipped with a dual closed loop sensor kit and running in closed loop mode, VFI tuning becomes a breeze! S&S supplies base maps for several displacement groups, creating a starting point to get bikes up and running. Utilizing dual oxygen sensors *(sold separately)* placed in the exhaust, the S&S closed loop system modifies the base fuel map to meet the specific requirements of your engine!

- Automatic tuning on the street or on the dyno
- Each cylinder is tuned individually
- Fuel map changes are saved in the module & can be merged with the pre-loaded base map
- Works with stock oxygen sensors used on late model Harley-Davidson® motorcycles

Closed loop VFI can also automatically compensate fuel delivery for modifications creating up to a 20 hp gain, such as changes in:

- Displacement
- Cams
- Exhaust
- Head porting or installation of aftermarket heads

KIT CONTENTS

- Delphi® style S&S VFI module
- USB port cover kit
- Installation instructions



55-5090



106-2066

DELPHI® STYLE S&S VFI MODULE

Fitment/Description	Part #
VFI Module for 2001–'11 bt *(except 2008–up touring and 2011 Softail®)***	**55-5090***
S&S Delphi Style VFI Closed Loop Sensor Kit USA	**106-2066**

*DISCLAIMER: NOT LEGAL FOR SALE OR USE IN CALIFORNIA ON ANY POLLUTION CONTROLLED MOTOR VEHICLE. NOT LEGAL FOR SALE OR USE NATIONWIDE ON ANY FEDERAL POLLUTION CONTROLLED MOTOR VEHICLE UNDER THE CLEAN AIR ACT

REPLACEMENT PARTS FOR VFI MODULES

Description	Part #
Service Kit, O2 Sensor USA	**106-2061**
Service Kit, DTM Pin	**55-1521**
Service Kit, Oxygen Sensor Boss USA USA	**55-6071-S**
Service Kit, Subharness *(Delphi Style)*	**55-1595**
Hardware Kit *(USB Cover)*	**55-5091**

NOTES

All current production S&S modules are closed loop compatible, and all older S&S modules can be updated with current calibration by simply downloading software from the S&S website at sscycle.com/protune

Please note that maps created for older versions of the VFI software are not compatible with the new closed loop software, however they can be converted to closed loop if desired.

S&S VFI systems installed on 2004–up Harley-Davidson® models incorporate a speedometer calibration feature.

Due to the extreme range of control offered by the S&S VFI modules, we recommend that they be installed and tuned by S&S Certified VFI Tuning Centers. Check www.sscycle.com to find a tuning center near you.

VARIABLE PRESSURE CLUTCH

The VP clutch is the most cost effective kit for upgrading your HD® stock clutch Up to 40% more pressure for stronger clutch engagement.

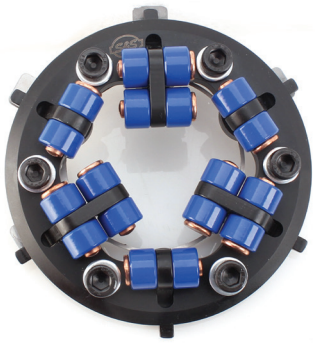

FEATURES AND BENEFITS

- Works like a lock up clutch
- Increased torque capacity: strength of engagement increases with RPM
- 10 minute installation
- Fits behind most stock derby covers and primary covers—*No modification required*
- Can be used with cable and hydraulic clutch controls

Does not fit: 2013 and later CVO™ and Tri-Glide™, 2015 and later Ultra Limited Low and Electra Glide Classic Low Models with new HD® Assist and Slipper Clutch: 3 Stud Clutch Hub

Non-stock derby cover (including any special or 2003 anniversary cover) and 3 hole derby covers may require a derby

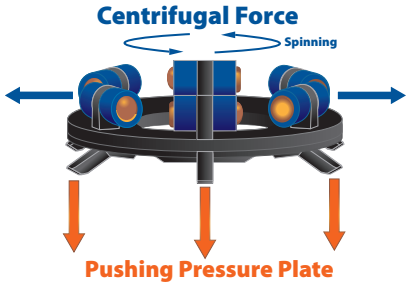

Centrifugal force makes more clamping force. Regular clutches have static pressure only with clutch springs. The Lock up clutch has two different types of pressure. One is a Static Pressure, and another is a Centrifugal Force by Lock-up as an additional pressure.

VARIABLE PRESSURE CLUTCH

Description	Part #
1998–2017 big twins except M8	**560-0242**

INNER PRIMARY BEARING RACE

FEATURES AND BENEFITS

- Will not "walk" on transmission mainshaft
- Prevents costly damage to mainshaft seal, output gear & output gear bearing
- Simple to install

The tendency of the stock inner primary bearing race on late model big twins to shift on the transmission mainshaft under high torque loads, also known as "walking" of the race, can cause destruction of the transmission mainshaft seal, and ultimately the mainshaft seal, output gear and output gear bearing. The S&S inner primary bearing race features an extra step on the inside diameter that acts as a stop on the transmission mainshaft. When the race is pressed on to the shaft, the step will not allow the race to move inward toward the mainshaft seal. The improved S&S bearing race is a must for any high performance application.



INNER PRIMARY BEARING RACE

Description	Part #
2006 Dyna® models, 2008, 2010–2017 big twins, *except 2017 touring*	**560-0241**

HEAVY DUTY DIAPHRAGM SPRING

FITMENT

- 1998–2017 big twin models, *except 2017 touring models*

FEATURES AND BENEFITS

- 380 lbs pressure, 25% stronger than stock
- Same pressure as Screamin' Eagle® heavy-duty spring
- Compatible with S&S VP and stock clutches



HEAVY DUTY DIAPHRAGM SPRING

Description	Part #
1998- up big twins	**560-0244**

GATES® HIGH STRENGTH FINAL DRIVE BELTS

S&S final drive belts by Gates are available with 14mm pitch in 1½" and 1⅛" widths. See the chart and match the width and number of teeth required for your vehicle. You can find this information in the vehicle service manual.



SECONDARY DRIVE BELTS (14MM PITCH)

Teeth	1⅛" Wide	1½" Wide
125	**106-0357**	–
126	–	**106-0348**
127	–	**106-0349**
128	**106-0358**	**106-0350**
130	**106-0359**	**106-0351**
132	**106-0360**	**106-0352**
133	**106-0361**	**106-0353**
135	**106-0362**	**106-0354**
136	–	**106-0355**
139	**106-0363**	**106-0356**
149	**106-1338**	**106-2695**
156	–	**106-2827**

ATTENTION CUSTOM BIKE MANUFACTURERS! SPECIAL ORDER BELTS FROM S&S® AND GATES®

Special belt sizes, private brand labeling, and assistance with belt drive design, are available to custom performance OEM's and aftermarket bike builders, through S&S. These products and services are available for licensed motorcycle manufacturers only, and a minimum order quantity may be required.

Drive belts with your company name imprinted on them are a perfect way to show off your brand. Any belt size currently available in the S&S catalog, as well as the special ordered sizes, can be specially branded. Minimum order quantities would apply.

Whether you're designing a completely new chassis, or simply need a replacement belt, S&S can help you find the belt you're looking for. Through the combined efforts of Gates and S&S, S&S can now provide customers with the technical assistance they need for designing new secondary belt drive systems. In addition, S&S can help you determine required tooth count for your existing chassis design, based on the pulley center-to-center distances and pulley tooth counts.

All belts have a 14mm tooth pitch, and are made of the super strong Gates Carbon X3N material. Belts are available in three standard widths of 1.125", 1.5"and 1.181" (30mm), but can be special ordered in nearly any width for a nominal charge. If you want a belt with a special tooth count, they are also available (see the special order chart for availability).

Contact your S&S Customer Support Representative for more information.

BELTS AVAILABLE BY SPECIAL ORDER (14MM PITCH)

Tooth Count	1.181" (30MM) Width*	1.25" Width*
125	●	
126	●	●
127	●	●
128	●	
130	●	
131	●	●
132	●	
133	●	
135	●	
136	●	●
137	●	●
139	●	
140	●	●
149	●	
150	●	●
151	●	●
152	●	●
156	●	

**Minimum order required: 1.181" (30mm) – 16 belts; 1.25" – 17 belts.*

GASKETS

REBUILD GASKET KITS FOR S&S T-SERIES 1999–UP ENGINES AND HOT SET UP KIT®

1999–up 4⅛", S&S base bolt pattern	**106-0976**
1999–up, 4⅛", Stock base bolt pattern	**310-0335**
1999–up T143 4.425" bore	**310-0751**

TOP END GASKET KIT FOR TWIN CAM 96®/103® AND S&S ENGINES

Bore	Part #
4⅜"	**90-9511**
4⅛" Stock Cases	**90-9510**
4" Stock Bolt Pattern	**90-9505**
3⅞", 3.927", & 3.937" Stock Bolt Pattern	**90-9504**

Kits include all gaskets and seals required to rebuild the top end of an S&S engine with S&S cylinders and cylinder heads. Rocker cover gaskets are not included in kits. See "S&S Rocker Cover Gasket Kit" chart to order separately.

CYLINDER HEAD GASKET KITS FOR T-SERIES 1999-UP

Bore	Part #
4⅛" Stock Bolt Pattern	**90-1914**
4 ⅜" bore	**900-0800**
4" Stock Bolt Pattern	**90-1913**
3⅞", 3.927", & 3.937" Stock Bolt Pattern	**910-0465***

Kits contain head gaskets, base gaskets or o-rings, and exhaust pipe gaskets for two cylinder heads. Rocker cover gaskets are not included in kits. See "S&S Rocker Cover Gasket Kit" chart to order separately.

*DISCLAIMER: NOT LEGAL FOR SALE OR USE IN CALIFORNIA ON ANY POLLUTION CONTROLLED MOTOR VEHICLE. NOT LEGAL FOR SALE OR USE NATIONWIDE ON ANY FEDERAL POLLUTION CONTROLLED MOTOR VEHICLE UNDER THE CLEAN AIR ACT

HEAD GASKETS FOR S&S® ENGINES

Description	Bore Size	Thickness	QTY	Part #
Copper	4⅜"	.045"	*2 pack*	**93-1081**
Layered Steel	4⅛" Stock Bolt Pattern with Twin Cooled™ Heads	.045"	*each*	**900-0608**
Layered Steel	4⅛" Stock Bolt Pattern	.043"	*each*	**93-1091-S**
			2 pack	**930-0102**
Layered Steel	4⅛" Stock Bolt Pattern	.030"	*2 pack*	**900-0217**
Layered Steel	4⅛" Stock Bolt Pattern with Twin Cooled™ Heads	.030"	*2 pack*	**900-0609**
Graphite	4" Stock Bolt Pattern	.043"	*each*	**93-1043-S**
Layered Steel	4" Stock Bolt Pattern	.045"	*2 pack*	**900-0822**
Layered Steel	4" Stock Bolt Pattern	.030"	*2 pack*	**900-0821**
Layered Steel	3⅞", 3.927", & 3.937" Stock Bolt Pattern with Twin Cooled Heads	.030"	*2 pack*	**900-0605**
Graphite	3¾" Stock Bolt Pattern	.043"	*each*	**93-1045-S** *16775-99B*
Layered Steel	3⅞", 3.927", & 3.937" including Twin-Cooled Heads	.045"	*2 pack*	**900-0862**
Layered Steel	4 7⁄16"	.045"	*2 pack*	**900-0762**

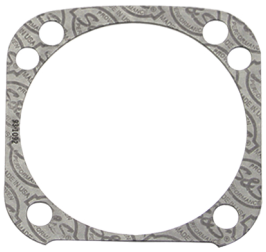

Micropore

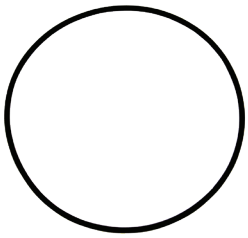

Viton® O-ring

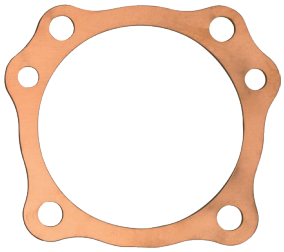

Copper

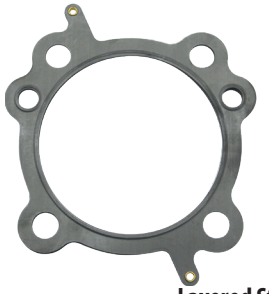

Layered Steel

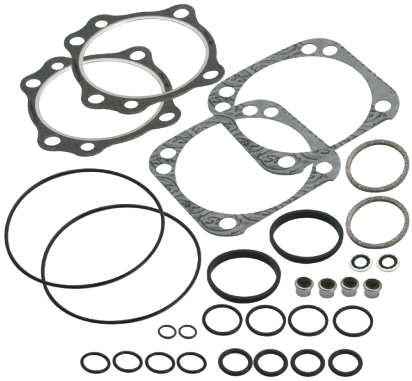

90-9505

CONTINUED- GASKETS

BASE GASKETS AND O-RINGS S&S® T-SERIES 1999–UP

Description	Bore Size	Thickness	QTY	Part #
Graphite	4"	.018"	each	**93-1050-S**
	4⅛" S&S Bolt Pattern		each	**93-1048-S**
			2 pack	**930-0101**
			10 pack	**93-1074**
Micropore	4⅜"	.018"	2 pack	**93-1082**
	4⅛" Stock Bolt Pattern		each	**93-1092-S**
			2 pack	**930-0101**
			10 pack	**93-1921**
	4.425"	.018"	2 pack	**900-0783**
Viton O-ring	4"	.103"	each	**50-8049**
	3¾", 3⅞", 3.927", 3.937"	.103"	each	**50-8048** *11256*



106-5029



106-5688

EXHAUST GASKETS

1984–'12 big twins	each	**106-5029** *65324-83B, 65324-83A*
	10 pack	**93-1072**

ROCKER COVER GASKET KITS

Rocker Cover Style	Head Type	Part #
S&S Die-cast	S&S Heads	**90-4111**
Stock 1999–2017, *except 2017 touring models*	Stock or S&S Heads	**90-4097***
Stock 1999–2017, *except 2017 touring models*	Stock heads	**900-0534**

All kits include gaskets for two rocker covers.
**Kit contains bottom rocker gaskets for stock, S&S 79cc, & S&S 89cc heads*

DIE CAST ROCKER BOXES

Gasket, bottom rocker cover, 4⅛", 1984–up	each	**90-4071-S**
	2 pack	**90-4071**
	10 pack	**90-4099**

VALVE GUIDE SEALS

Valve Stem Oil Seal, Hat Style	each	**900-0590** *18094-02*
Valve Guide Seal	each	**106-5688**
Valve, Umbrella	each	**900-0495** *26858-99*
Filter, Breather	each	**900-0496** *63815-99*

CONTINUED- GASKETS

STOCK ROCKER BOXES

O-ring, (-114), .625" ID x .812" OD, Black, Viton®			**50-8033** *11270*
Gasket, bottom rocker cover, 4⅛", 1984-up		*each*	**90-4071-S** *16719-99B*
		2 pack	**90-4071**
		10 pack	**90-4099**
Gasket,Breather Cover,Stock Pattern	1999–'10	*each*	**90-4077** *17591-99, 17162-03, 17592-99*
	2011–'17	*each*	**900-0415**
Gasket,Breather Baffle,Stock Pattern	1999–'10	*each*	**90-4078** *17162-03, 17592-99*
	2011–'17	*each*	**900-0416**
Gasket,Rocker Cover,Steel, 1999–up bt		*each*	**90-4096-S** *17386-99A*
Gasket, Bottom, Rocker Cover, S&S® Heads w/Stock Rocker Box, 1999–up bt		*each*	**90-4124**
		2 pack	**90-4120**

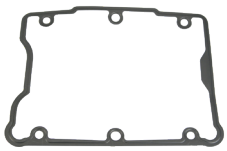

90-4096-S

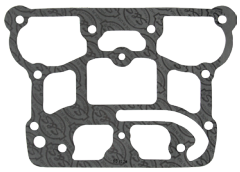

90-4124

LOWER END GASKETS AND SEALS

Gear Cover gasket	*each*	**31-2032-S** *25244-99A*
Tappet Cover gasket	*each*	**33-5303-S** *18635-99B*
	2 pack	**33-5303-2** *18635-99B*

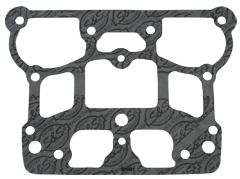

90-4071-S

PUSHROD O-RINGS

O-ring,Kit,Pushrod Cover,1984–'99 bt		**93-4022**
Top O-ring	*each*	**50-8039** *11293, 11157, 11101, 11190*
Middle O-ring	*each*	**50-8038** *11132A*
Bottom O-ring	*each*	**50-8037** *11145A*

MISCELLANEOUS GASKETS

Sprocket Shaft seal		**31-4035** *12068*
S&S Oil pump seal kit		**31-2097**
Oil Pump Scavenge o-ring	*each*	**50-8039** *11293, 11157, 11101, 11190*
Case alignment dowel o-ring	*each*	**50-8034-S** *26432-76A*
	2 pack	**50-8034** *26432-76A*
Oil jet o-ring	*each*	**50-8270**
	5 pack	**50-8275**
Cam plate and oil line plate o-ring	*each*	**50-8066-S** *11301*

MANIFOLD SEALS

S&S Manifold O-Ring	*each*	**16-0235**
	10 pack	**16-0243**
Stock Manifold O-ring	*each*	**16-0236** *26995-86B, 26995-86A, 26992-99*
	10 pack	**16-0244** *26995-86A, 26992-99, 26995-86B*
Cap, rubber, manifold, fitting	*each*	**50-8372**

CLASSIC TEARDROP AIR CLEANER

Backplate gasket		*each*	**106-1724**
		10 pack	**106-2328**
Vent seal washers silicone coated steel	½"	*each*	**50-7055**
		10 pack	**50-7057**
	⅜"	*each*	**50-7054**
		10 pack	**50-7059**

STEALTH AIR CLEANER

Backplate gasket

Stock CV Carb & EFI Throttle Body,1991-up xl/bt *(except Throttle by Wire)*		**106-6022** *29062-95B*
Super E/G	*each*	**106-1724**
	10 pack	**106-2328**
For Muscle air cleaner *(includes lanyards)*		**170-0137**
Vent seal washers Nitrile Rubber Coated, .380" x .880" x .024"	*each*	**50-7054**
	10 pack	**50-7059**

SINGLE BORE TUNED INDUCTION

Backplate gasket

Gasket, Backplate - E/G/SBEFI	*each*	**106-1724**
	10 pack	**106-2328**
Gasket, S&S SBEFI 58mm		**106-4662**
Gasket, Stock carb/Throttle Body		**106-6022** *29062-95B*
Adaptor plate gasket		**17-1022**
Adaptor plate bracket o-ring	*each*	**50-0446**

SINGLE BORE EFI THROTTLE BODY

Backplate gasket

52mm	*each*	**106-1724**
	10 pack	**106-2328**
58mm	*each*	**106-4662**
O-ring, throttle body to manifold		**50-7967-S**
Air Temp Sensor gasket		**16-5009-S**
IAC o-ring		**50-8149-S**
Fuel injector o-ring top		**50-8264-S**
Fuel injector o-ring bottom		**50-8265-S**
Fuel rail inlet o-ring	*each*	**50-8137-S** *27237-95*

THROTTLE HOG CABLE-OPERATED THROTTLE BODIES
REPLACEMENT PARTS

1. Throttle Body, Assembly, Cable Operated ..... **N/A**
2. Clamp, Kit, Hold-Down, MAP Sensor **160-0169**
3. Flange, Set, Packaged, 2006-Up bt. **160-0168**
4. Guide, Assembly, Throttle Cable **160-0113**
5. Screw,PH Panhead,10-24 x 5/16",Zinc,Steel **50-0093-S**
6. Gasket, Throttle Body,
   58mm. **160-0050**
   66mm. **160-0035**
7. Screw,Torx,M4 x 12mm,Zinc,Steel **50-0358-S**
8. Throttle Return Spring **160-0119**
9. Throttle Cable Spool **160-0120**
10. Throttle Shaft Nut **11-2350**

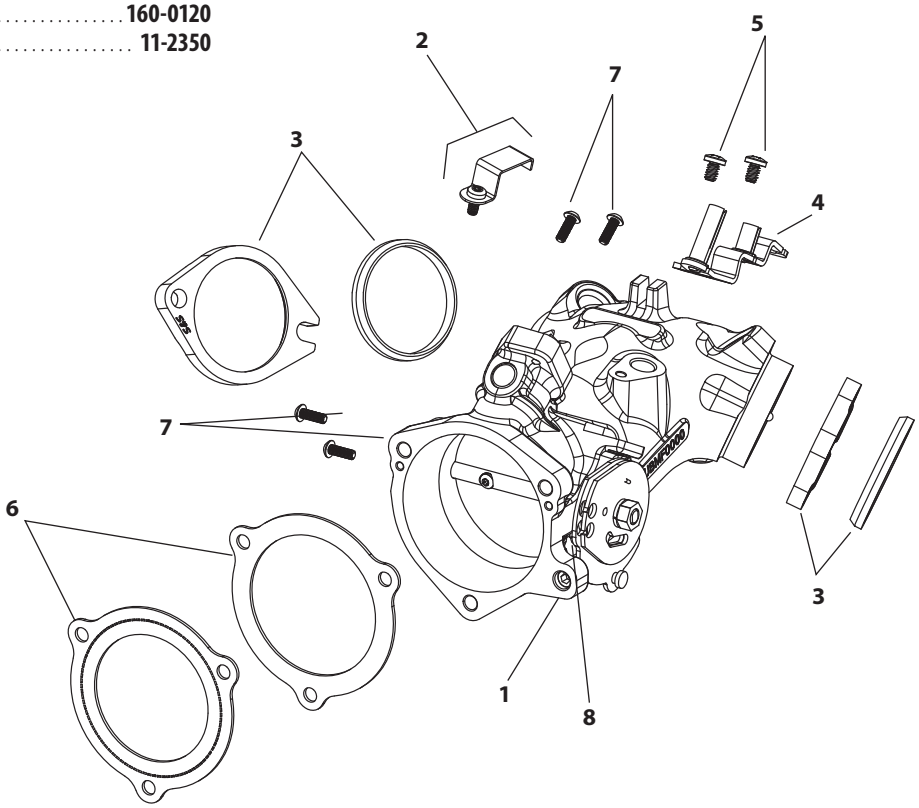

6.2 g/s FUEL INJECTORS for
2006–2017 Cable-operated Throttle Hogs 550-0749



SINGLE BORE EFI THROTTLE BODY
AND RELATED REPLACEMENT PARTS

1. Throttle body
52mm, 2006-'16 bt (N/S) **16-5153**
58mm, 2006-'16 bt (N/S) **106-3957**
2. Cap, canister purge *(each)* **50-8266-S**
3. Manifold (See page 108)
4. Cap, rubber, manifold, fitting **50-8372**
5. Throttle cable guide packet with hardware **55-5084**
6. Screw, cable guide & air cleaner backplate *(each)* **50-0041**
10 pack **50-0062**
7. O-ring, throttle body to manifold *27270-95* **50-7967-S**
8. Intake air temperature sensor with hardware *27270-95* ..... **55-5041**±
9. Gasket, IAT **16-5009-S**
10. Screw, M3, IAT **50-0357-S**
11. Idle air control motor SS EFI with hardware ..... **N/A**
12. O-ring, IAC ..... **N/A**
13. Screw, Idle air control motor
2006-'16 *(each)* **50-0358-S**
14. Fuel rail kit
2006-'16 (Fuel inlet tube not included.) **16-5202**
15. Tube clip, fuel rail inlet 2001-'16 *(each)* **50-0391-S**
16. O-ring, fuel rail inlet, 2001-'16 *27237-95* (*each*) **50-8137-S**
17. Backing washer, fuel rail inlet, 2001-'15 ..... **50-0349-S**
18. Screw, rail, 1995-'16 (*each*) **50-0039**
10 Pack **50-0146**
19. Fuel injector (*each*) **55-5052A**
2 Pack **55-5052**
20. O-ring, injector top, black **50-8264-S**
21. O-ring, injector bottom, orange **50-8265-S**
22. Screw, fuel rail *(each)* **50-0358-S**
23. MAP sensor *32424-98, 32416-10, 32417-10* **55-1090**
24. Screw, throttle body to manifold *(each)* **50-0359-S**
25. Washer, lock , #10, throttle body to manifold **50-7000**
26. Gasket, backplate
52mm *(each)* **106-1724**
10 pack **106-2328**
58mm *(each)* **106-4662**
27. Harness, injector adapter kit
1995-'05 ..... **55-5074**
2006-'16 (N/S) **55-5209**
28. Fuel inlet tube 45°, 2002-'16 *27221-95* **50-0485**
29. Spacer, throttle position – 2002-'16 (N/S) **55-5201**
31. Screw, Torx, M4 x 12mm, Zinc, Steel **50-0358-S**
32. Washer, Flat, 4mm x 9mm x .9mm, Stainless Steel **50-7145-S**

(N/S) = Not Shown
N/A = Not Available

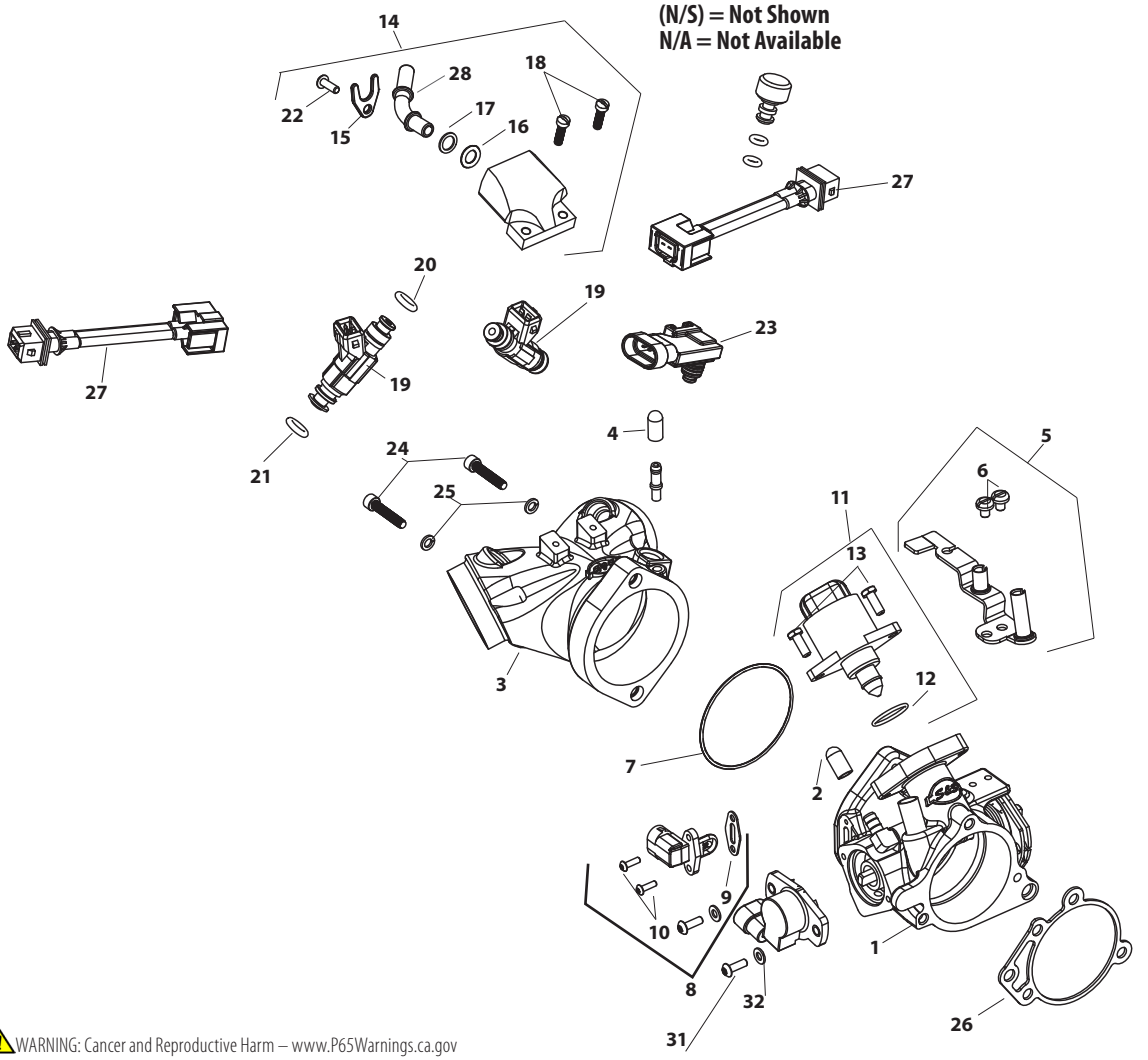

± ⚠ WARNING: Cancer and Reproductive Harm – www.P65Warnings.ca.gov

SUPER STOCK T2 CRANKCASE REPLACEMENT PARTS

1. Bolt, stator 10-24 x1" SHC - 4 required *2720* **50-0044**
2. Seal, sprocket shaft *12068* **31-4035**
3. Bearing, Timken® sprocket shaft *9028*
..... USA USA 1,2,3 **31-4013**
4. Timken Main Bearing Spacers
Fits 1 1/4" stock diameter shaft.
.0995" - .1005" *9124* ..... USA **31-4071**
.1015" - .1025" *9125* ..... USA **31-4072**
.1035" - .1045" *9126* ..... USA **31-4073**
.1055" - .1065" *9127* ..... USA **31-4074**
.1075" - .1085" *9128* ..... USA **31-4075**
.1195" - .1205" *9134* ..... USA **31-4076**
5. Bolt, case 5/16" -18 x 3 1/2" HHC - 8 required
Chrome *(each)* **50-0254-S**
Zinc *3427 (each)* **50-0117**
6. Washer, flat 5/16" x 1 1/16" x 1/16" - 8 required *6320, 70907-07, 6016, 6702*
each **50-7034**
7. Bolt center case Screw,HHC,Gr8,1/4-28 x 5-1/2",Zinc,Steel
each **50-0090**
8. Washer, flat, 1/4" x .474" x .050"
each **50-7020**
9. Nut 1/4"-28 Grade 8 - 1 required *7683* **50-5011**
10. Cylinder stud, S&S® Bolt Pattern, 6.070"- 8 required
(each) ..... USA **31-2325-S**
8 pack ..... USA **31-2340**
Cylinder stud, Stock Bolt Pattern, 6.312" - 8 required
(each) **310-0437**
11. Pin, Dowel, .4377" x .500", Steel, *4 Pack* **500-0219**
12. Bolt, cam plate 1/4" -20 x 1" SHC - 4 required *852*
each **50-0084**
13. Bolt, cam plate 1/4" -20 x 1 1/4" SHC - 2 required *4740A, 3482A*
each **50-0008**
14. O-ring, cam plate - 9 required *11301 (each)* **50-8066-S**
15. Dowel, cam plate - 2 required *16589-99A* **50-8148-S**
16 Bearing,Inner,Needle,Cam,1.0" x 1.25" x .50" *9215*
each ..... USA **31-4199-S**
17. Bearing, pinion shaft – Fits all S&S and OEM 2000-'02 (Balanced models only) & all OEM 2003-up
24604-00D **31-4085**
18. Retaining Ring,Internal,25/8",Black,Carbon Steel 2 required
each **310-0730**
19. O-ring, oil pump 1 1/16" I.D. x 15/16" O.D. x 1/8" CS *11293, 11157, 11101, 11190*
each **50-8039**
20. Plug, magnetic drain **50-8335**
21. Baffle plate **31-0119-S**
22. Screw 10-24 x 3/8" pan head - 2 required
each **50-0050**
23. Dowel, case alignment - 2 required *16574-99A, 16573-83, 16573-83A*
each **50-8023**
10 pack **50-8109**
24. O-ring, case alignment,- 2 required *26432-76A*
9/16" I.D. x 1 1/16" O.D. x 1/6" CS *(each)* **50-8034-S**
2 pack **50-8034**
25. Jet, Assembly, Piston Cooling, Low Profile, for T143
Piston Oiler Jet Kit ..... USA **310-0647**
Piston Oiler Jet Kit includes:
a. O-ring, (-014), .500" ID x .625" OD *11140, 11273*
each **50-8270**
10 pack **50-8130**
b. Screw, Torx Panhead, 8-32 x 3/8", Zinc, Steel *68042-99*
each **50-0054-S**
26. Pin Dowel, *2 pack* **50-8195**
27. Fitting, crankcase vent, *2 pack* **50-0443**
28. Fitting Pipe, 90°, Bared Male Pipe 3/8 ..... **50-8288**
29. O-ring, -13, .437 ID, X .565 OD, Viton *11105, 11273* **50-8008**
30. Installation Kit, Oil Line, 2007-'16 FL ..... **310-0435**±
Installation Kit Includes:
31. Hose,Oil Line,.500"x.750"x24" **500-0223**
32. Clamp,Hose,Pinch Style,.812"OD Hose. **500-0241**
33. Fitting Pipe, 90°, Bared Male Pipe 3/8 ..... **50-8288**
34. Fitting,Pipe,45°,Male,3/8 NPT x .500",Brass ..... **500-0226**±
35. Clamp,Hose,Pinch Style,45/64" - 53/64" **50-0378-S**
36. Hose,Oil Line,Feed.Formed,.500"ID, 2007-up Touring **310-0350**

(N/S) = Not shown

± WARNING: Cancer and Reproductive Harm – www.P65Warnings.ca.gov

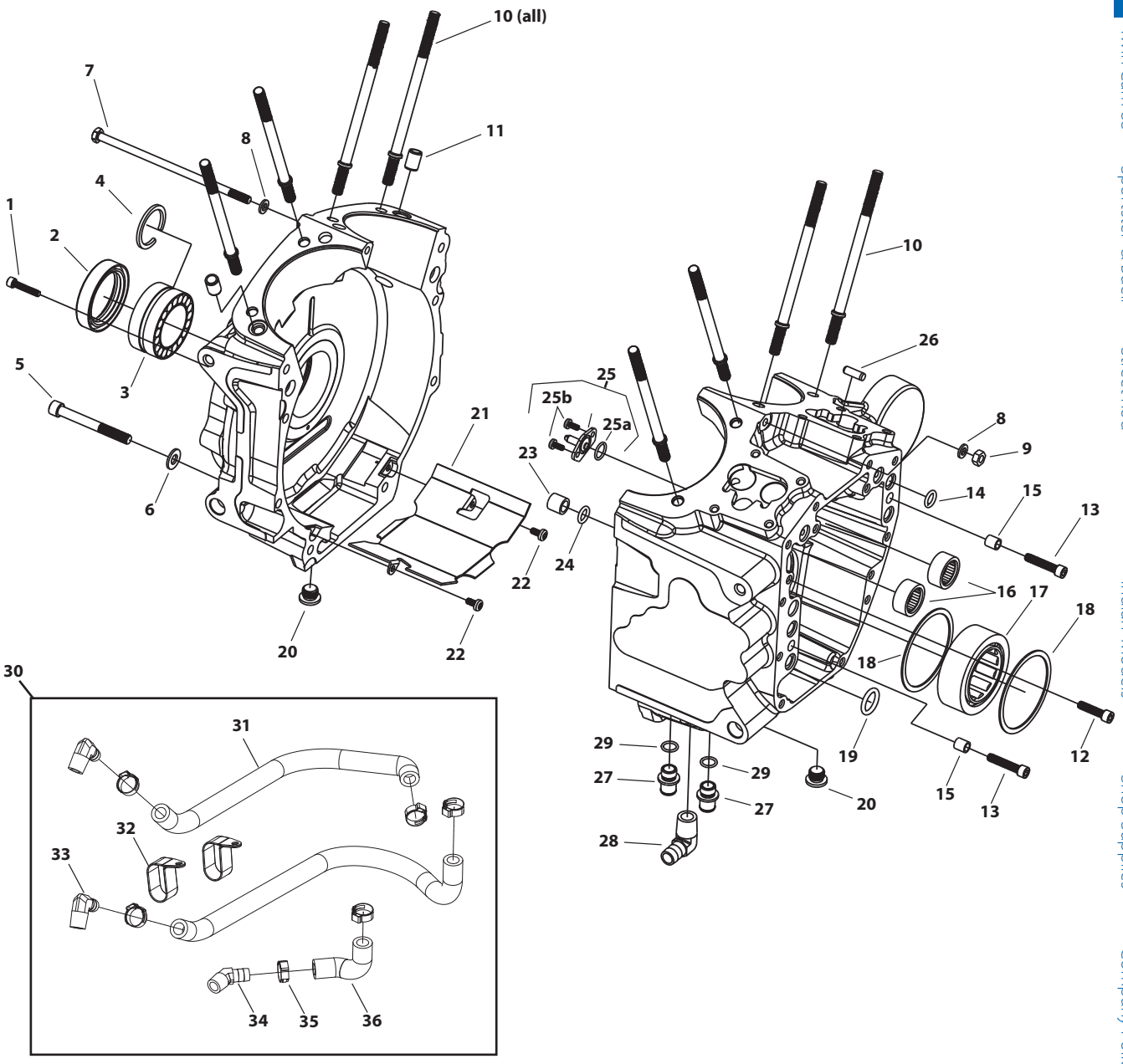
10 (all)
7
8
11
4
1
2
3
5
6
21
20
22
22
10
26
25
25b
25a
23
24
8
9
14
15
13
16
17
18
18
12
19
20
29
27
29
27
28
15
13
30
31
32
33
34
35
36

5-PIECE FLYWHEEL REPLACEMENT PARTS

1. Sprocket Shaft, 1999-2006 bt (includes key #5) ..... **N/A**
2. Sprocket Shaft, 2006 Dyna®, 2007-2012 bt **33-2011**
3. Pinion Shaft, 1999-2012 bt (includes key #5) ..... **N/A**
4. Pinion Shaft, 2000-2012 w/balancer (includes key #5) ..... **N/A**
5. Key *(each)* **50-8227**
6. Front Rod Race, 1999-2012 ..... USA **34-4008**
7. Rear Rod Race ..... USA **34-4013**
8. Crankpin
   - Standard **106-6239**
   - +.001 ..... **340-0017**
   - +.002 ..... **340-0018**
9. Crankpin Plug *(each)* **106-5256**
   - *2 pack* **50-8329-2**
10. Bearing Assembly **340-0028**
11. Wristpin Bushing,
    - 1999-2012 bt, straight bushing ..... USA **34-4012**

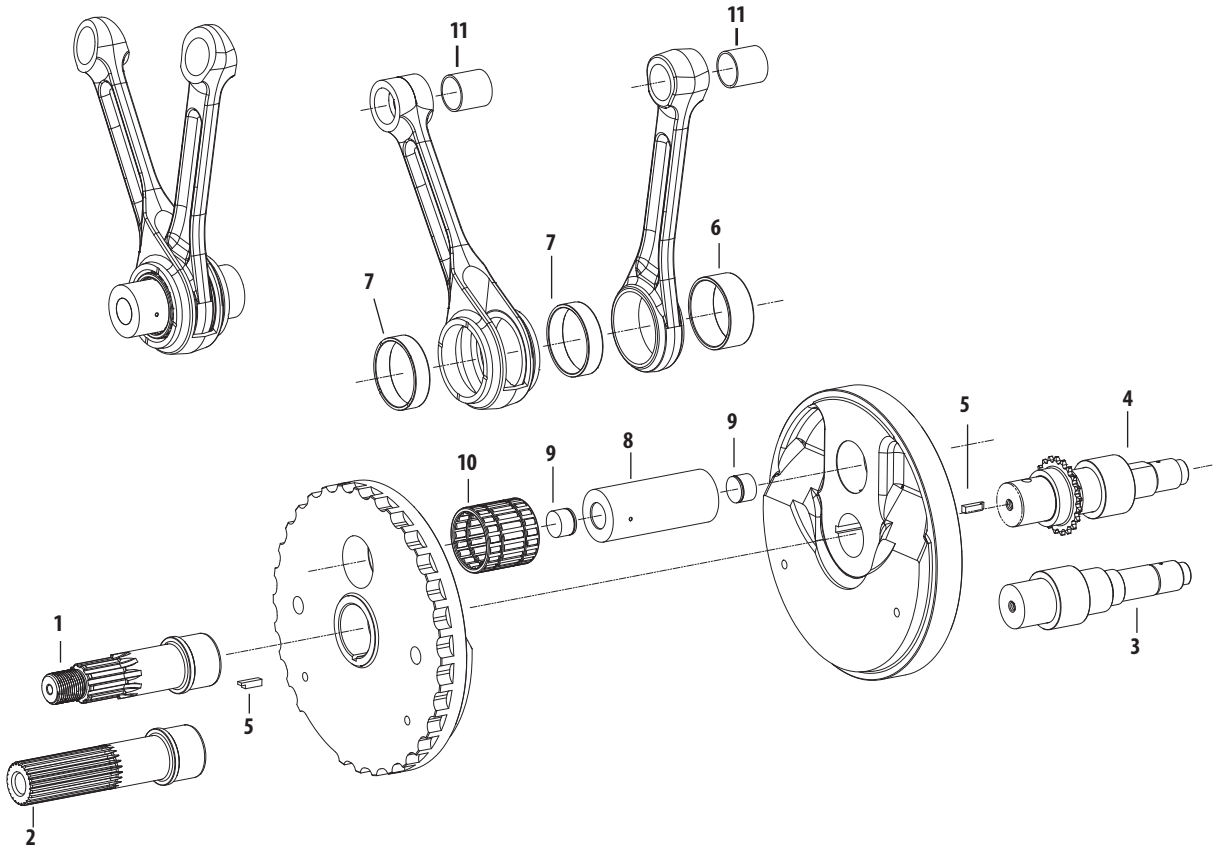

NOTES

S&S flywheels for Harley-Davidson® Twin Cam 88® and Twin Cam 96™ engines are pressed together as opposed to using the traditional tapered shafts and crankpin. Assembly and truing requires special equipment.

3-PIECE FLYWHEEL REPLACEMENT PARTS

1. Washer, Flywheel, Thrust, 1.25" x 1.83" x .136", Hardened Steel **320-0198**
2. Crankpin, Press-In, Straight, 1.671", 1999-Up bt (includes plugs)
   Standard **340-0069**
   +.001 ..... **340-0070**
   +.002 ..... **340-0071**
3. Race, Inner, Left Main Bearing, 1.25" x 1.65" x .713", Hardened Steel **340-0076**
4. Race, Inner, Right Main Bearing, 1.25" x 1.65" x 1.120", Hardened Steel **340-0077**
5. Connecting Rod, Set, Full Width Wristpin, 7.575", 120R. . . **340-0062**
   Connecting Rod, Set, Full Width Wristpin, 7.659" **340-0074**
   Connecting Rod Set, Full Wristpin, 7.800", T143 ..... **340-0128**
6. Connecting Rod, Set, Tapered Wristpin, 7.659" **340-0061**
7. Bearing, Set, Rod, Standard **310-0752**
8. Plug, Drive, .8965" x .850", Steel, Fatigue Proof
   2 pack **500-0187**
9. Retaining Ring,External,Pinion Bearing,1.160" x 1.480" x .046" Carbon Steel,SAE 1060-1090 *11177A* **50-8057**
10. Bushing, Wristpin, .928", Bronze *each* **340-0024**

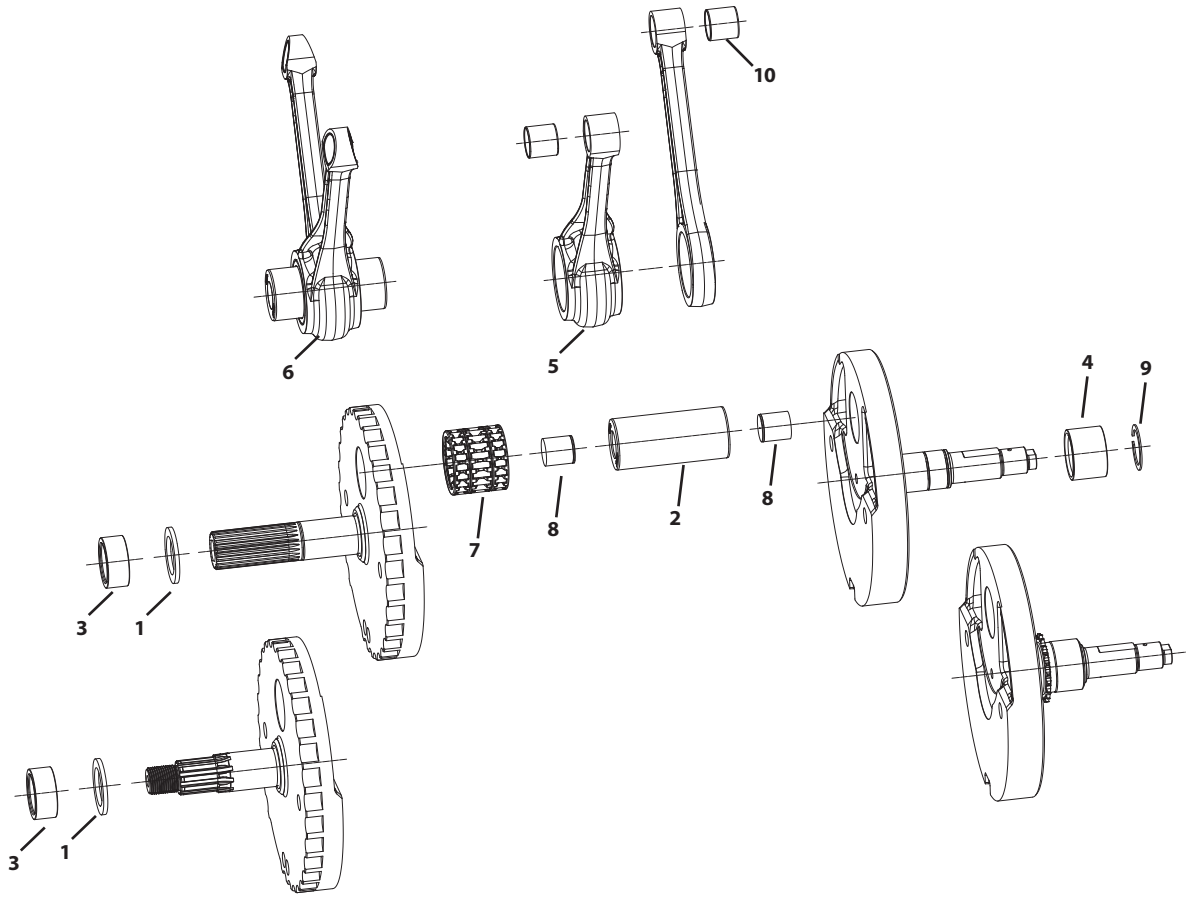

TC3 OIL PUMP REPLACEMENT PARTS

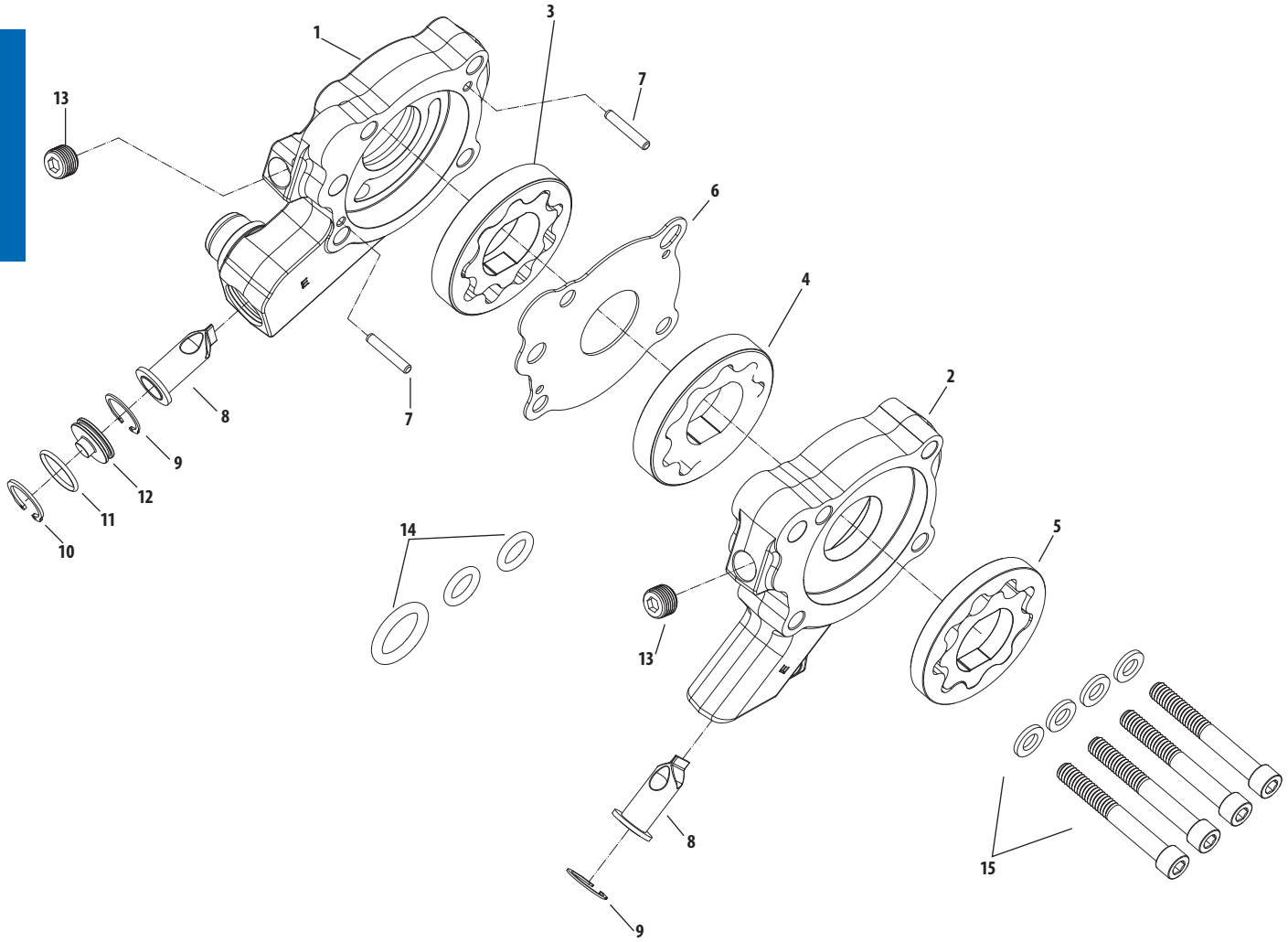

1. Oil pump body case return section ..... **NA**
2. Oil pump body cam chest return / pressure feed ..... **NA**
3. Oil pump rotor set, flywheel cavity return **310-1092**
4. Oil pump rotor set, cam chest cavity return **36-7021-S**
5. Oil pump rotor set, supply **310-0561**
6. Plate, divider **310-0516**
7. Dowel Pin, .125 x .750 Hardened Steel **106-3794**
8. Debris screen **310-0546**
9. Internal Retaining Ring, .625 ..... **500-0860**
10. Internal Retaining Ring, 17mm **500-0859**
11. O-ring, 1.5mm x 14mm, Viton *(5 Pack)* **500-0861**
12. Oil pump return plug **310-0564**
13. Plug, Pipe 1/8" 27 ..... **50-8331A**
14. O-ring kit **500-0326**
15. Screw, Kit, Oil Pump, 1999-Up BT (¼" 20 x 2" SHCS w/washers) **500-0327**

TC3 CAM PLATE REPLACEMENT PARTS

1. Cam support plate ..... **N/A**
2. Pressure relief valve **31-6082-S**
3. Pressure relief spring. **31-6018**
4. Pressure relief adjusting screw **170-0252**
5. Pressure relief adjusting screw lock nut **170-0251**
6. ⅛" 27 taper pipe plug **50-8331A**
7. Bearing retention plate kit **330-0015**
8. Hydraulic tensioner block off kit **106-5723**
9. O-ring kit **500-0326**

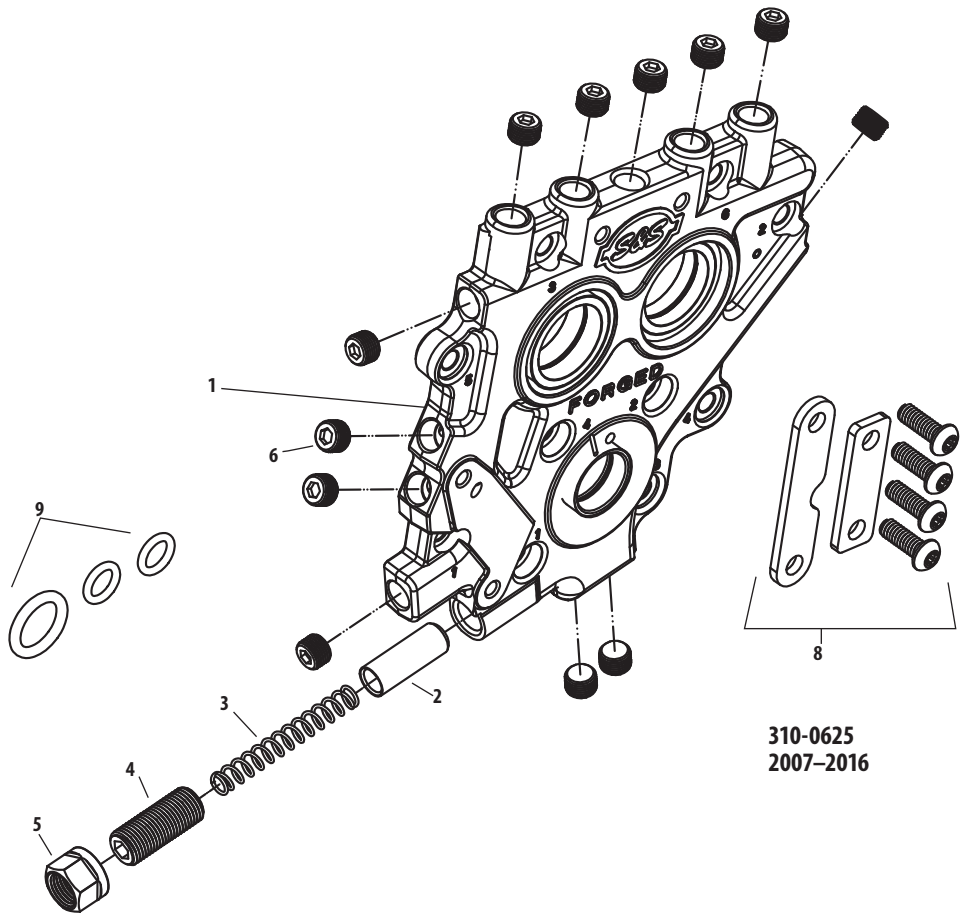

310-0625
2007–2016

B3 CYLINDER HEADS REPLACEMENT PARTS
FOR S&S T143 ENGINES

1. Cylinder Heads Set, B3
   Black. **900-0803**
   Stone Gray **900-0806**
2. Seat, Blank, B3 Heads, 2.300"
   Intake **900-0677**
   Exhaust **90-2126-S**
3. Valve
   Intake **900-0678**
   Exhaust **900-0679**
4. Seal,Manifold,B2 Heads,2.250" x 2.520" x .290" **16-0246-S**
5. Flange, Set. **160-0091**
   Front. **160-0087**
   Rear **160-0088**
6. Washer,Flat,.344" x .688" x .065",Zinc,Steel **50-7034**
7. Bolt,Hex Head,Gr5,5⁄16-18 x 1",Zinc. **50-0108**
8. Screw,SHCS,w/Flat Washer,5⁄16-18 x 1",Zinc. . . . **50-0125-S**
9. Fitting,Pipe,Straight,1⁄4-18 NPTF x 1.510" X .500",Zinc,Steel
   . . . . . **50-8158-S**
10. Valve Guide, Intake, Powder Metal **900-0780**
11. Retaining Ring,External,Spiral,Heavy Duty,.525" x .035" x .050",
    Carbon Steel **106-2164**
12. Exhaust Gasket Backing Washer,
    2.18" x 1.885" x .200" **550-0219**
13. Exhaust Gasket, Tapered, Stainless Steel. **550-0221**
14. Exhaust Flange Retaining Ring, 2.125" x .078" . **50-8159-S**
15. Exhaust Flange **550-0223**
16. Weld-On Exhaust Header Pipe **550-0222**
17. Exhaust Adapter Flange for Stock Header Pipe . . **550-0224**
18. Exhaust Flange Retaining Ring, 1.759" x .062" . . **550-0226**
19. Exhaust Gasket,Tapered Stainless Steel **106-5029**
20. Press-in Aluminum Retaining Ring, 1984–up . . **550-0225**
21. Exhaust Gasket Backing Washer,
    2.18" x 1.690" x.125". **550-0220**
22. Head Mount Bracket Kit
    2008 T143 . . . . . **900-0797**
    2009-up T143 . . . . . **900-0798**

VALVE SPRING REPLACEMENT PARTS:
SEE PAGE 130

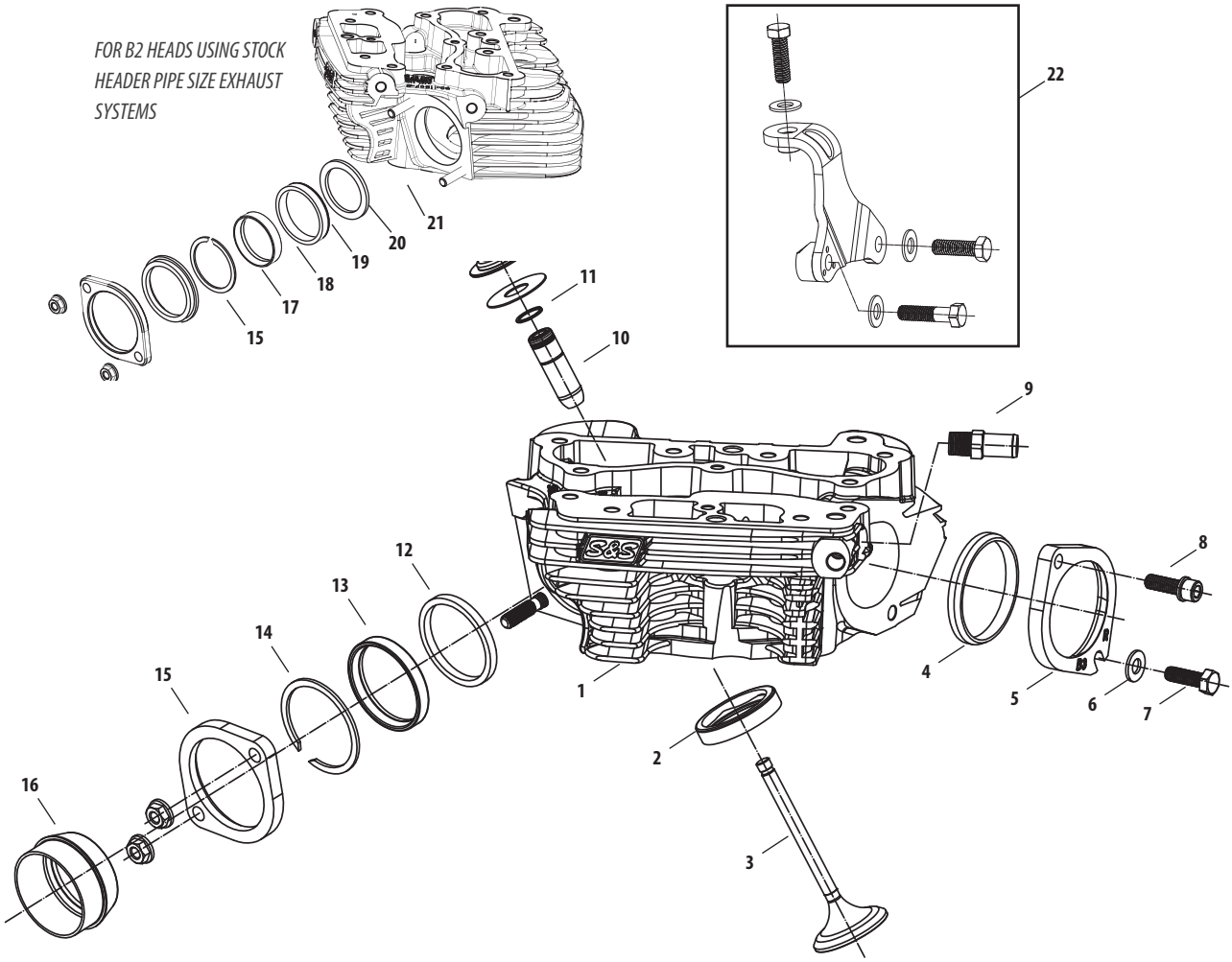

All reference to HD® Part # is for identification purposes only. We in no way are implying that any of S&S Cycle's products are original equipment parts or that they are equivalent to the corresponding HD® Part # shown.

B2 CYLINDER HEADS REPLACEMENT PARTS

1. Cylinder head – (See page 101)
2. Valve
   Intake, 2.200" Dia. **90-2127**
   Exhaust, 1.800" Dia. **90-2128**
3. Valve Seat
   Exhaust, 1.800" Dia, ... **90-2126**
   Intake, 2.200" Dia, ... **90-2125**
4. Valve guide, intake/exhaust, cast
   STD **900-0553**
   +.030" **106-2170**
9. Adaptor, Exhaust Flange. **55-6022**
10. Snap ring *(each)* **106-2164**
11. Flange, exhaust, front/rear. **55-6021**
12. Washer,Lock,.332" x .583" x .078" **50-7032**
13. Screw, SH, 5/16" -18 x 1" *3201WA, 2708* **50-0101**
14. Gasket,Kit,Exhaust,B2 Heads,SA. **90-1900**
    Kit includes two each:
    a. Gasket, exhaust pipe *(each)* **93-1083-S**
    6 pack **93-1083**
    b. Retaining Ring. ..... **N/A**
15. Screw, SH, 5⁄16-18 x ¾" *3275 each* **50-0302-S**
16. Washer, 5⁄16" *6320, 70907-07, 6016, 6702)* **50-7034**
17. Manifold mounting flange
    Front **16-0247**
    Rear **16-0248**
18. O-ring, manifold *(each)* **16-0246-S**
    6 pack **16-0246**
19. Fitting, vent hose, 1/8"-27 pipe **50-8115**
20. Exhaust Flange, 1984–up S&S® B2 Heads **550-0223**
21. Exhaust Adapter Flange for Stock Header Pipe, 1984–up S&S® B2 Heads **550-0224**
22. Exhaust Flange Retaining Ring, 1.759" x .062" **550-0226**
23. Exhaust Gasket,Tapered Stainless Steel, 1984–up bt, 1986–up xl
    65324-83B, 65324-83A **106-5029**
24. Press-in Aluminum Retaining Ring, 1984–up S&S® B2 Heads **550-0225**
25. Exhaust Gasket Backing Washer 2.18" x 1.690" x.125" **550-0220**
26. Exhaust Flange Retaining Ring, 2.125" x .078" **50-8159-S**
27. Exhaust Gasket, Tapered, Stainless Steel, 1984–up S&S® B2 Heads **550-0221**
28. Exhaust Gasket Backing Washer 2.18" x 1.885" x .200" **550-0219**
29. Weld-On Exhaust Header Pipe **550-0222**

VALVE SPRING REPLACEMENT PARTS:
SEE PAGE 130

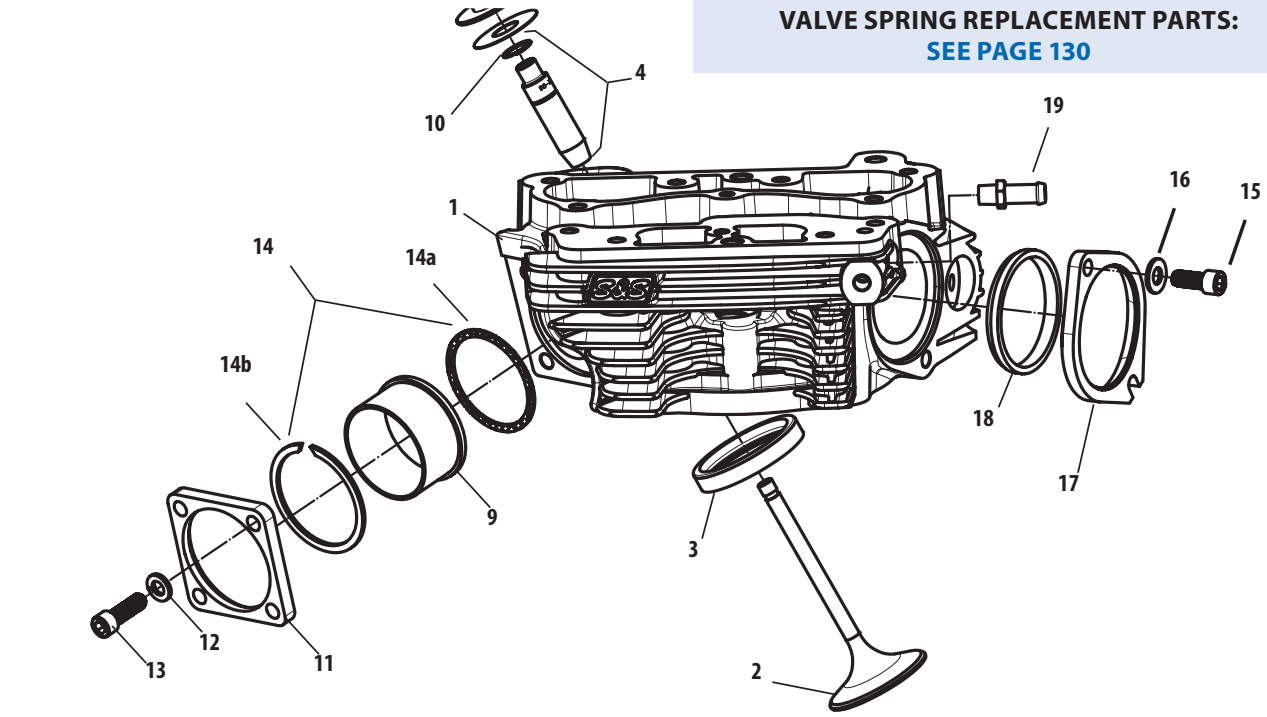

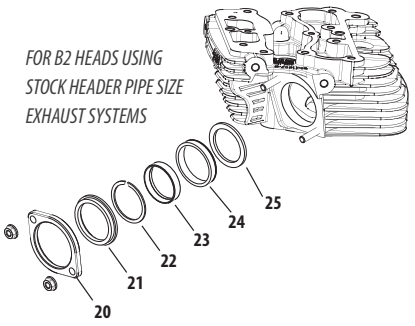

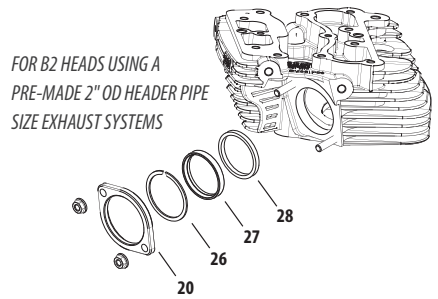

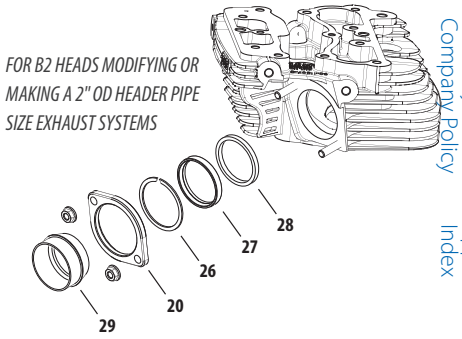

All reference to HD® Part # is for identification purposes only. We in no way are implying that any of S&S Cycle's products are original equipment parts or that they are equivalent to the corresponding HD® Part # shown.

SUPER STOCK® CYLINDER HEADS REPLACEMENT PARTS
FOR 2007–2016 BIG TWIN ENGINES

1. Cylinder head (Starting page 102)

2. Valve
All S&S heads with 89cc or 91cc chamber
Intake
2.000" diameter ... USA 4 **90-2000**
2.000"diameter +.085" stem length ... **90-2004**
Exhaust
1.605" diameter ... USA 4 **90-2001**
All S&S heads with 79cc chamber
Intake – 1.940" diameter ... **90-2025**
Exhaust – 1.575" diameter ... **90-2026**

3. Valve seat
All S&S heads with 89cc or 91cc chamber
Intake - 2.000" diameter ... USA 1,2,3 **90-2002**
Exhaust - 1.605" diameter ... USA 1,2,3 **90-2003**
All S&S heads with 79cc chamber
Intake - 1.940" diameter ... **90-2027**
Exhaust - 1.575" diameter ... **90-2028**

4.
a. Valve guide - Intake or Exhaust Cast
Standard *18112-92* ... USA USA 1,2,3 **90-2210**
+.001" *18130-83C* ... USA **90-2211**
+.002" *18133-83A, 18133-83D* ... USA **90-2212**
+.003" *18131-83C* ... USA **90-2213**
+.030" ... USA **90-2219**
b. Valve Guide - Intake or Exhaust Powder Metal (PM)
Standard ... **900-0553**
+.001 ... **900-0554**
+.002 ... **900-0555**
+.003 ... **900-0556**

5. Head bolt assembly – (8 Required) (Includes head bolt washer)
each ... **93-3037**
4 pack ... **93-3037-4**

6. Head bolt washer, .250" *(each)* ... **50-7091**

7. Exhaust port stud *16715-83 (each)* ... USA **50-0493**
5 pack ... USA **50-1028**

8. Lock washer - 5/16" ... **50-7032**

9. Nut, flanged - 5/16" -24 *7593*
Zinc *(each)* ... **50-5025-S**
2 pack ... **50-5025-2**
5 pack ... **50-1001**
Chrome *(each)* ... **50-5030-S**±

10. Exhaust pipe gasket, tapered *65324-83B, 65324-83A*
each ... **106-5029**
10 pack ... **93-1072**

11. Intake manifold (see page 108)

12. Manifold mounting screw
SH - 5/16"-18 x 3/4" *3275 (each)* ... **50-0302-S**
SH - 5/16"-18 x 1" *3201WA, 2708* ... **50-0101**
HH - 5/16"-18 x 1" *3987 (each)* ... USA **50-0108**

13. Flat washer - 5/16" *6320, 70907-07, 6016, 6702* ... **50-7034**

14. Manifold mounting flange
Front *27009-86A (each)* ... USA **16-0232**
5 pack ... USA **16-0600**
Rear *27010-86A (each)* ... USA **16-0233**
5 pack ... USA **16-0601**
Set (Front & Rear) ... **106-3516**

15. Manifold o-ring
For S&S manifold *(each)* ... **16-0235**
10 pack ... **16-0243**
For Stock manifold *26995-86B, 26995-86A, 26992-99* ...
each ... USA **16-0236**
10 pack ... **16-0244**

16. Head gasket
For Stock Bolt Pattern
3¾" x .043" Graphite *(each)* ... **93-1045-S**
3⅞"/3.927" x .030" Layered Steel *(2 pack)* ... **900-0605**
3⅞"/3.927" x .045" Layered Steel *(each)* ... **900-0606**
4" x .043" Graphite *(each)* ... **93-1043-S**
4⅛" x .043" Layered Steel *(each)* ... **93-1091-S**
4⅛" x .030" Layered Steel *(2 pack)* ... **900-0217**
For S&S Bores
4⅛" x .043" Graphite *(each)* ... **93-1047-S**
10 pack ... **93-1073**
4⅜" x .045" Copper *(2 pack)* ... **93-1081**

17. Alignment dowel, base and head *16595-99A (each)* ... **50-8177**
4 pack ... **50-8177-4**

18. Alignment dowel o-ring – Base (all bore sizes)
S&S heads 3¾" bore only *11105, 11273*
each ... **50-8008**
10 pack ... **50-8078**

19. Plug, HH - 14mm *(each)* ... **90-4916**
2 pack ... **90-4916-2**

20. Washer, compression - 14mm
507" x .705" x .047" *(each)* ... **50-7094**

21. Head mount bolt - 3/8"-16 x 1¼" *4716W*
each ... **50-0168**

22. Flat washer - 3/8" *(each)* ... **50-7051**

23. Vent hose fitting, (For 4⅛" Bore Only)
Front, 1/16"-27 pipe ... **50-8117**
Rear, 1/8"-27 pipe ... **50-8115**

24. Check Valve (For 4⅛" Bore Only) ... **50-8122**

25. Base Gaskets
For S&S Bores
4⅜" x .018" Graphite *(2 pack)* ... **93-1082**
4⅛" x .018" Graphite *(each)* ... **93-1048-S**
10 pack ... **93-1074**
4" x .018" Graphite *(each)* ... **93-1050-S**
For Stock Bolt Pattern
4⅛" x .018" Graphite *(each)* ... **93-1092-S**
10 pack ... **93-1921**

26. Base O-ring (Used for early S&S bores)
4" x .103" *(each)* ... **50-8049**
3⅝" or 3½" x.103" *(each) 11256* ... **50-8048**

± ⚠ WARNING: Cancer and Reproductive Harm – www.P65Warnings.ca.gov

VALVE SPRING REPLACEMENT PARTS:
SEE PAGE 130

All reference to HD® part numbers is for identification purposes only. We in no way are implying that any of S&S Cycle's products are original equipment parts or that they are equivalent to the corresponding HD® part number shown.

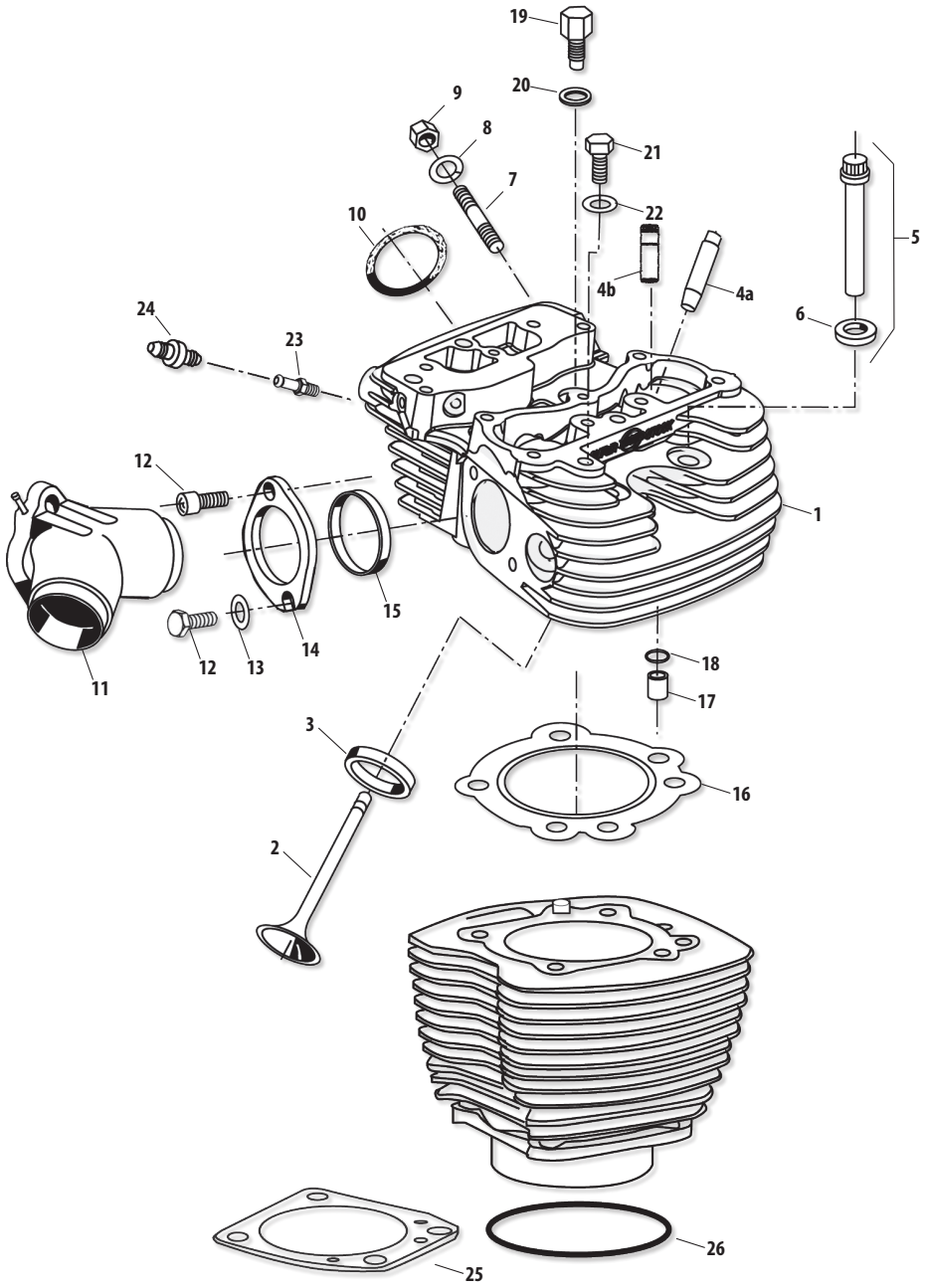

TOP END GASKET KIT FOR S&S ENGINES

Bore	Part #
4⅜"	**90-9511**
4⅛" Stock Cases	**90-9510**
4" Stock Bolt Pattern	**90-9505**
3⅞" Stock Bolt Pattern	**90-9504**

Kits include all gaskets and seals required to rebuild the top end of an S&S engine with S&S cylinders and cylinder heads. Rocker cover gaskets are not included in kits. *See "Rocker cover gasket kits" on page 115* *to order separately.*

VALVE GUIDE DIAMETERS FOR S&S® T-SERIES ENGINES

Oversize	Diameter	Part Number
Std.	.5625/.5620	**90-2210** USA 1,2,3
+.001	.5635/.5630	**90-2211** USA
+.002	.5645/.5640	**90-2212** USA
+.003	.5655/.5650	**90-2213** USA
+.030	.5925/.5920	**90-2219** USA

VALVE SPRING REPLACEMENT PARTS

.720" & .660" Lift Valve Springs (B3 Cylinder Heads)

1. Seal, valve guide, intake/exhaust *18001-83B (each)* **90-2008**
   8 pack **90-2158**
2. Keeper, valve spring, SA **90-2153A**
3. Valve spring shim
   .015" *(each)* **90-2086**
   5 pack **50-7161**
   .030" *(each)* **90-2087**
   5 pack **90-2198**

.650" Lift Valve Springs (B2 Cylinder Heads)

1. Seal, Valve Guide,fits .315" x .554"OD, Viton® *(4 pack)* **900-0737**
2. Keeper, valve spring, Standard, 9° **90-2094-S**

.650" Lift Sidewinder® Valve Springs
(Stock, Super Stock® & CNC Ported Cylinder Heads)

1. Spring, Valve .650" **106-5689**
2. Collar, Top, Steel **106-5690**
3. Collar, Bottom, Steel **106-5691**
4. Seal,Valve
   S&S CNC Ported Heads & 2005-up bt w/7mm valve stem **106-5688**
   S&S Super Stock Heads
   .420" Cast *(each)* **900-0338**
   .562" Powder Metal *(4 pack)* **900-0737**
5. Keeper, valve spring **106-5692**
6. Valve Spring Shim
   .015" *(each)* **500-0013**
   .030" *(each)* **500-0014**

.585" Lift Valve Springs
(Stock, Super Stock® & CNC Ported Cylinder Heads)

1. Spring, Valve .585" **900-0444**
2. Collar, Top **900-0550**
3. Collar, Bottom
   For Stock Heads w/7mm valve stem (includes seal) **900-0590**
   For CNC Ported Heads w/7mm valve stem **900-0549**
   For Super Stock Heads **900-0600**
4. Seal, valve guide
   For Stock Heads w/7mm valve stem
   (includes bottom collar) **900-0590**
   For CNC Ported Heads w/7mm valve stem **106-5688**
   For Super Stock Heads
   .420" Cast *(each)* **900-0338**
   562" Powder Metal *(4 pack)* **900-0737**
5. Keeper, valve spring
   For Stock and CNC Ported Heads **106-5692**
   For Super Stock Heads **90-2094-S**
6. Valve spring shim
   For Stock and CNC Ported Heads
   .015" **500-0013**
   .030" **500-0014**
   For Super Stock Heads
   .015" **90-2086**
   .030" **90-2087**

.720" & .660" Lift Valve Springs

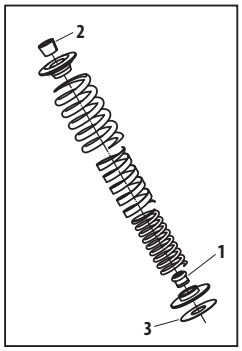

.650" Lift Valve Springs

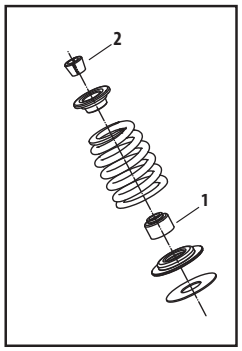

.650" Lift Sidewinder® Valve Springs

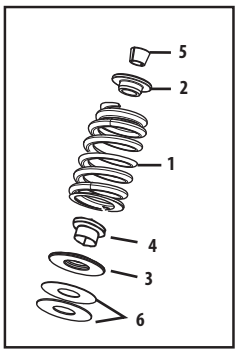

.585" Lift Valve Springs

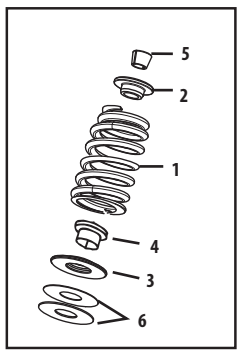

DIE-CAST ROCKER COVER REPLACEMENT PARTS
FOR 2007–2015 BIG TWIN ENGINES

1. Screw, socket head ¼"-20 x ¾" *4069A (each)* **50-0067**
2. Washer, flat ¼" *(each)* **50-7017**
   12 pack **50-7013**
3. Washer, silicone coated ¼" *(each)* **50-7015**
   8 pack **50-7015-8**
   12 pack **50-7015-12**
4. Seal, o-ring
   (Included in gasket kit see #16 below.)
5. Screw, socket head, ¼"-20 x 1" *4741A*
   each **50-0092-S**
   4 pack **50-0092P**
6. Screw, socket head, ¼"-20 x 2" *25794-36* **50-0013**
7. Screw, hex flange head, 5/16"-18 x 2½" *3501* **50-0123**
8. Support, rocker arm **90-4140**
9. Gasket, rocker cover, Graphite
   For Stock or S&S rocker covers on stock heads *16719-99B*
   each **90-4071-S**
   2 pack **90-4071**
   10 pack **90-4099**
   For Stock rocker covers on S&S heads *(each)* **90-4124**
   2 pack **90-4120**
10. Housing, rocker, Chrome ..... USA 3 **900-4283**±
11. Screw, socket head, 5/16"-18 x 1" **50-0125-S**
12. Seal, rocker cover
    (Included in gasket kit see #16 below.)
13. Washer, flat 5/16" *(each)* **50-7026**
14. Screw, socket head 5/16"-18 x 2¼"
    each **50-0115-S**
15. Cover, rocker, chrome ..... USA 1,2,3 **900-0706**±
16. Gasket set - rocker cover, cast (Not Shown) **90-4111**
17. Washer,.261" x .474" x .050",Annealed,Stainless Steel
    each **50-7020**

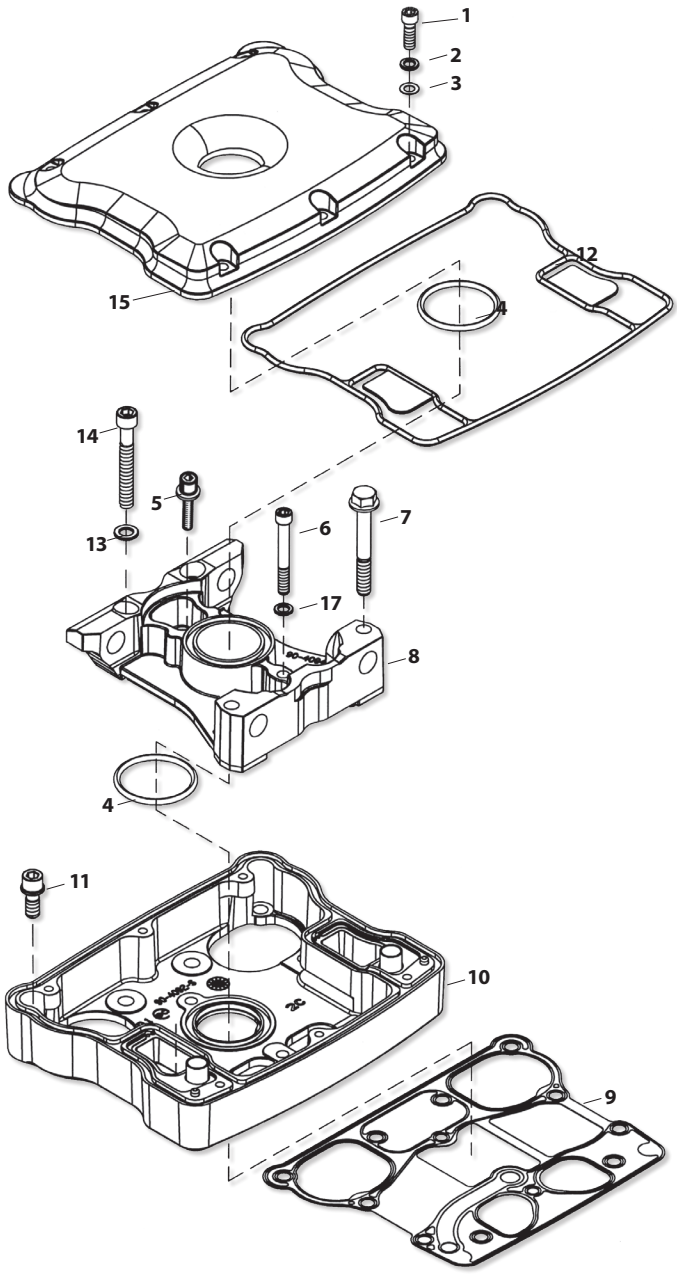

All reference to HD® part numbers is for identification purposes only. We in no way are implying that any of S&S Cycle's products are original equipment parts or that they are equivalent to the corresponding HD® part number shown.

± WARNING: Cancer and Reproductive Harm – www.P65Warnings.ca.gov

BILLET ROCKER COVER REPLACEMENT PARTS
FOR 1999–2017 BIG TWIN ENGINES (DISCONTINUED) EXCEPT 2017 TOURING MODELS

1. Base assembly, rocker ..... **N/A**
2. Top, rocker cover ..... **N/A**
3. SHCS, 1/4"-20 x 3/4" *4069A (each)* **50-0067**
4. Washer, flat, chrome, 260" x .425" x .060"
   each ..... **50-7017±**
   12 pack ..... **50-7013±**
5. Washer, flat, rubber coated, 1/4" x 7/16" x .020"
   each **50-7015**
   8 pack **50-7015-8**
   12 pack **50-7015-12**
6. SHCS, 5/16"-18 x 1" with flatwasher **50-0125-S**
7. O-ring, rocker cover seal, Viton®
   (Included in gasket kit #90-4073. See below)
8. O-ring, (-114), .625" ID x .937" OD *11270* **50-8033**
9. Gasket, Breather Baffle, Stock Pattern, Paper, 1999-'10 bt
   17162-03, 17592-99 each **90-4078**
10. Gasket, Breather Cover, Stock Pattern, Paper, 1999-'10 bt
    17591-99, 17162-03, 17592-99 each **90-4077**
11. Gasket, Rocker Cover, Steel, 1999-up bt *17386-99A* **90-4096-S**
12. Gasket, bottom rocker cover
    2 pack **90-4071**
    10 pack **90-4099**
13. Gasket kit, rocker cover (includes gaskets for 2 rocker covers) (Not Shown)
    For S&S billet rocker covers
    (includes #5,7,8,9,10,12) **90-4073**
    For 1999-'10 bt
    (includes #8,9,10,11,12) **90-4097**

N/A = No longer available

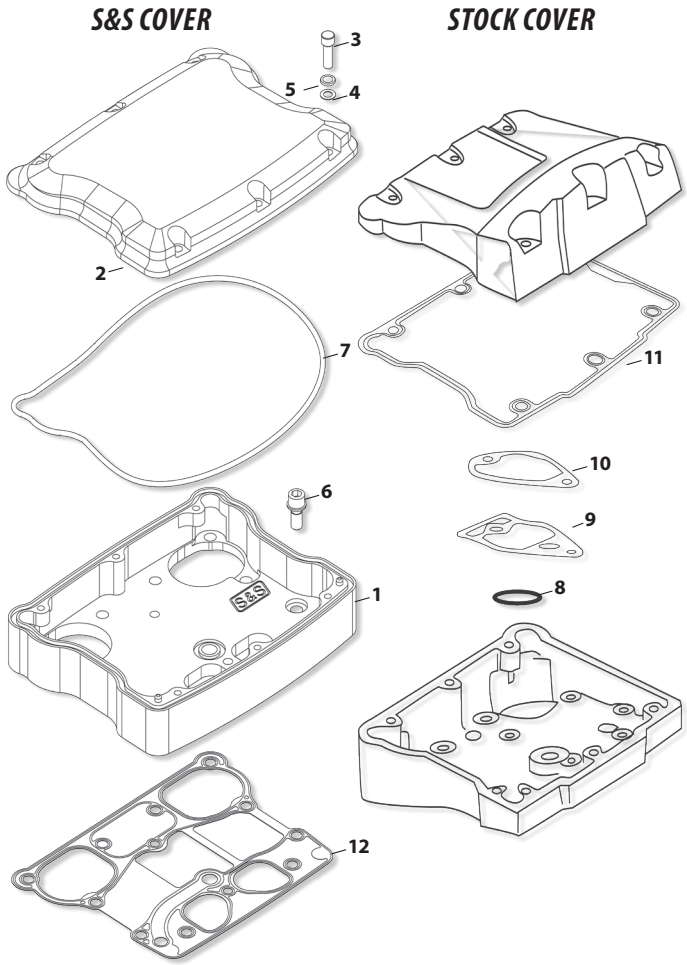

All reference to HD® part numbers is for identification purposes only. We in no way are implying that any of S&S Cycle's products are original equipment parts or that they are equivalent to the corresponding HD® part number shown.

± WARNING: Cancer and Reproductive Harm – www.P65Warnings.ca.gov

STEALTH REPLACEMENT PARTS

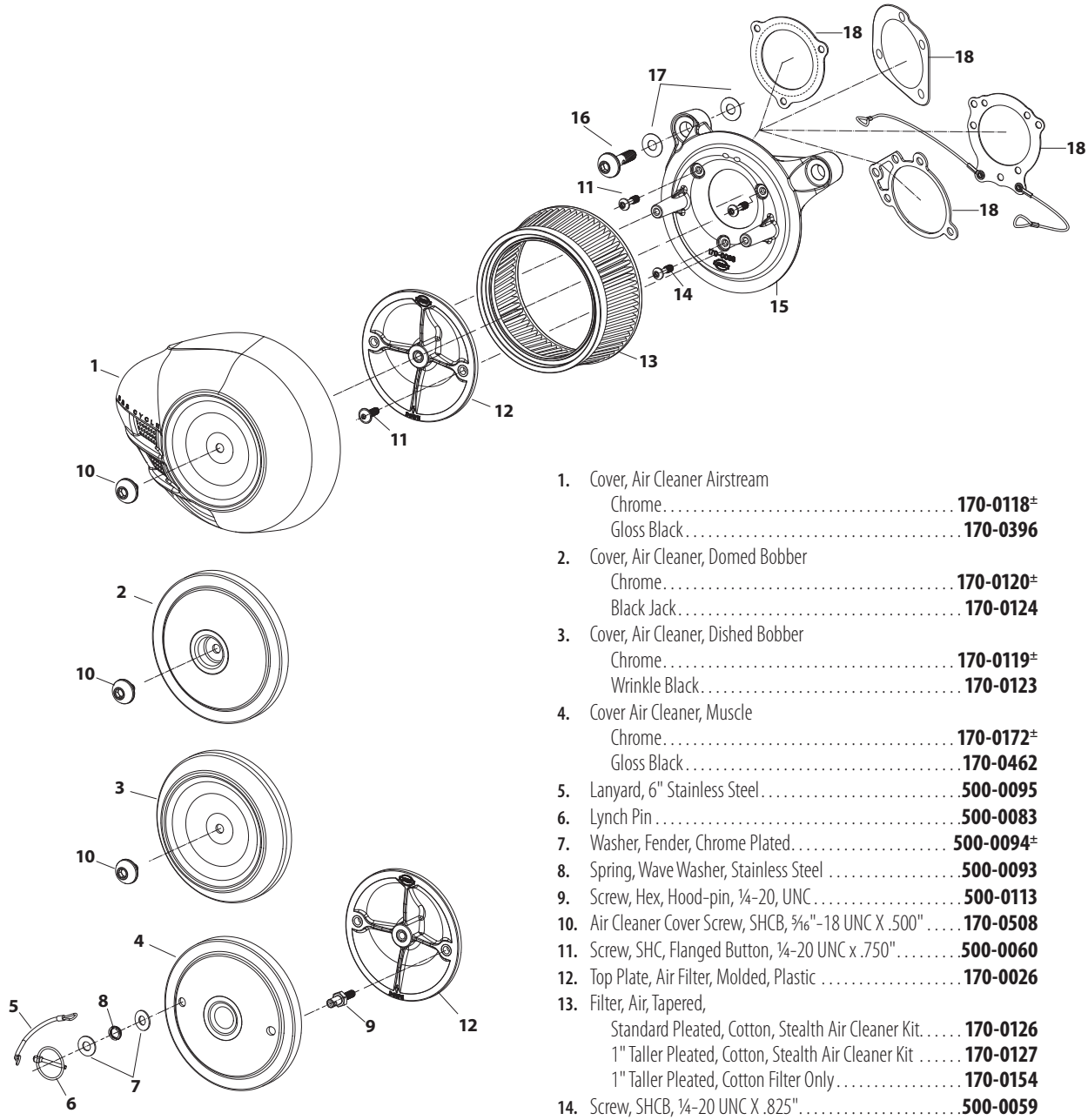

1. Cover, Air Cleaner Airstream
   - Chrome ..... **170-0118**±
   - Gloss Black **170-0396**
2. Cover, Air Cleaner, Domed Bobber
   - Chrome ..... **170-0120**±
   - Black Jack **170-0124**
3. Cover, Air Cleaner, Dished Bobber
   - Chrome ..... **170-0119**±
   - Wrinkle Black **170-0123**
4. Cover Air Cleaner, Muscle
   - Chrome ..... **170-0172**±
   - Gloss Black **170-0462**
5. Lanyard, 6" Stainless Steel **500-0095**
6. Lynch Pin **500-0083**
7. Washer, Fender, Chrome Plated ..... **500-0094**±
8. Spring, Wave Washer, Stainless Steel **500-0093**
9. Screw, Hex, Hood-pin, ¼-20, UNC **500-0113**
10. Air Cleaner Cover Screw, SHCB, 5⁄16"-18 UNC X .500" **170-0508**
11. Screw, SHC, Flanged Button, ¼-20 UNC x .750" **500-0060**
12. Top Plate, Air Filter, Molded, Plastic **170-0026**
13. Filter, Air, Tapered,
    - Standard Pleated, Cotton, Stealth Air Cleaner Kit. **170-0126**
    - 1" Taller Pleated, Cotton, Stealth Air Cleaner Kit **170-0127**
    - 1" Taller Pleated, Cotton Filter Only **170-0154**
14. Screw, SHCB, ¼-20 UNC X .825" **500-0059**
15. Backplate
    - 1993-up Stock CV Carb; 2001-up Delphi® EFI (except Throttle by Wire) **170-0021**
    - 2008-up bt, Delphi® EFI w/Throttle by Wire **170-0065**
16. Screw, Backplate Vent, SHCB, ⅜-16 x 1½", Polished Stainless **170-0045**
17. Washer,Flat, ,Nitrile Rubber Coated, .380" x .880" x .024"
    - *each* **50-7054**
    - *10 pack* **50-7059**
18. Gasket,Backplate
    - Stock CV Carb & EFI Throttle Body, 1991-up bt (except Throttle by Wire) *29062-95B* **106-6022**
    - 2008-up bt, Throttle by Wire **160-0035**
    - Super E/G,CV Adapter **106-1724**
    - w/lanyards for use with Muscle Cover **170-0137**

± WARNING: Cancer and Reproductive Harm – www.P65Warnings.ca.gov

SINGLE BORE TUNED INDUCTION SYSTEM REPLACEMENT PARTS

FOR S&S T-SERIES ENGINES AND 2007–'16 BIG TWINS, EXCEPT 2008–'16 TOURING MODELS

1. Tuned Intake Kit, 2.19" Single Bore with Red Filters
- Gloss Black **170-0454**
- Chrome Plated ..... **106-4967±**

2. Tuned Intake Assembly, 2.19" Single Bore
- Natural **106-4968**
- Gloss Black **170-0453**
- Chrome Plated ..... **106-4970±**

3. Air Filter, w/clamp, Stainless Cap – Conical – 2 7/16" I.D. x 4"
- Red *(each)* **17-1020**
- Blue *(each)* **17-1023**

4. Gasket, Intake – Adapter Plate **17-1022**

5. Plate, Adapter, 2.19" Single Bore Tuned Intake
- Chrome Steel ..... **17-1014±**

6. FHSC ¼-20 x 5/8" *(each)* **50-0433**

7. FHSC 5/16-18 x 5/8" *(each)* **50-0432**

8. O-Ring, Adapter Plate Bracket 3 5/8" O.D. x 3 1/2" I.D. 1/16 CS, Viton
each **50-0446**

9. Bracket Kit, 2.19" Single Bore Tuned Intake, Chrome
- Single VFI, S&S T124 ..... **106-4976±**
- Single VFI, 1984-up BT ..... **106-4977±**
- Stock Carb, Delphi® EFI, 1984-up BT ..... **106-4978±**

10. Backplate Screw, SHC, w/Threadlock, ¼-20 x ½" *(each)* ... **106-2084**
10 pack **106-2105**

11. Screw, 5/16 -18 x 1¼, BHC, Chrome *(each)* ..... **50-0309-S±**

12. Flat Washer 5/16" x 1/16" *6320, 70907-07, 6016, 6702* **50-7034**

13. Hose, Breather, ¼" I.D., 90° **19-0178A**

14. Screw, Breather Fitting, 3/8 -16 x 1¼" **50-0436**

15. Washer, Flat, 3/8" x 13/16" x 1/16", Chrome ..... **50-7106-S±**

16. Screw, Breather Fitting, ½ -13 x 1.25 ..... **50-0435**

17. Shim Kit
- (a) 5/16" I.D. S&S 4 1/8" engines **17-0314**
  Includes:
  - .325" x 1" x .018",Stainless Steel *(each)* **50-7038**
  - .325" x 1" x .030",Stainless Steel (each) **50-7039**
  - .325" x 1" x .048",Stainless Steel *(each)* **50-7040**
  - .325" x 1" x .105",Stainless Steel *(each)* **50-7041**
  - .325" x 1" x .125",Stainless Steel *(each)* **50-7042**
- (b) ½" I.D. 1993-up BT **17-0464**
  Includes:
  - .515" x 1" x .018",Stainless Steel *(each)* **50-7085**
  - .515" x 1" x .030",Stainless Steel *(each)* **50-7086**
  - .515" x 1" x .048",Stainless Steel *(each)* **50-7087**
  - .515" x 1" x .105",Stainless Steel *(each)* **50-7089**
  - .515" x 1" x .125",Stainless Steel *(each)* **50-7090**

19. Gasket, Backplate - E/G/SBEFI *(each)* **106-1724**
10 pack **106-2328**

20. Gasket, Backplate, S&S SBEFI 58mm **106-4662**

21. Gasket, Backplate, Stock carb/Throttle Body *29062-95B* **106-6022**

22. Hardware Kit
- 2007-'12 bt, except 2008-'12 Touring
  (includes #7, 8, 10, 11, 12, 13, 14, 15, 16, 17a, 17b, 19, 21) **17-5098**
- S&S 4 1/8" Bore Heads *(includes #7, 8, 10, 11, 12, 13, 17a, 19)* .. **500-0016**

23. Oil, Air Filter, 8 oz. (Not shown)
- Red **106-1163**
- Blue **106-1164**

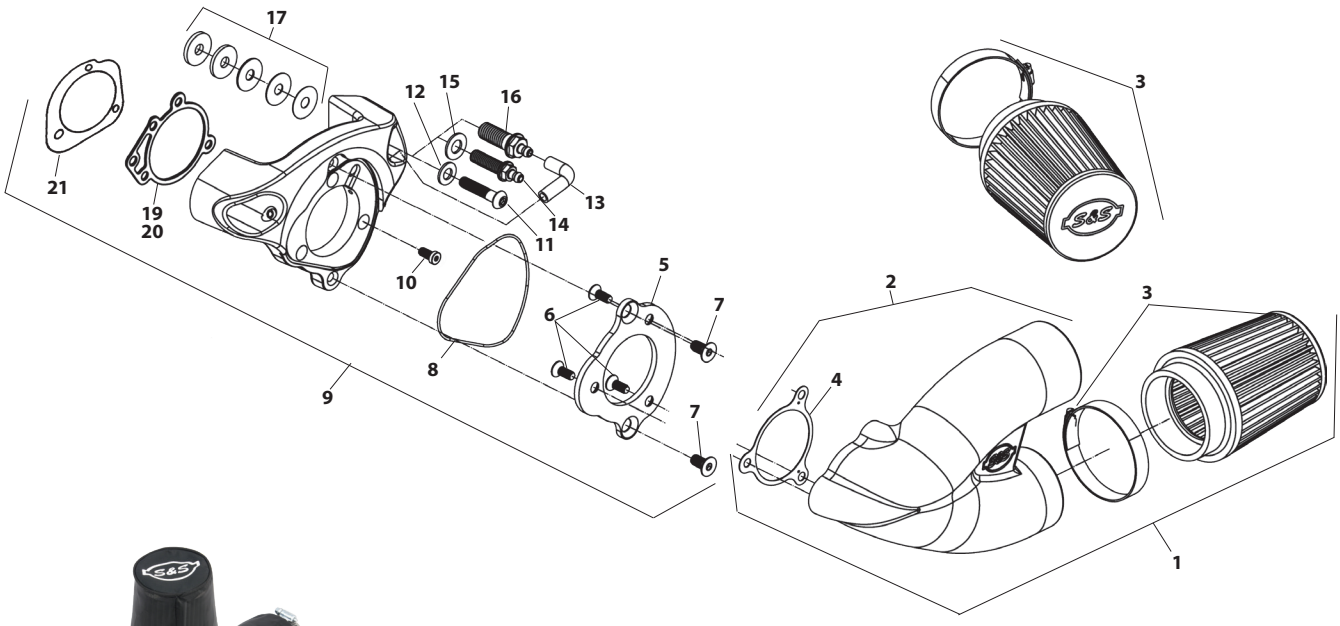



ACCESSORIES

Description		Part #
Nylon Air Filter Cover	*each*	**106-0247**
	2 pack	**106-0248**

± ⚠ WARNING: Cancer and Reproductive Harm – www.P65Warnings.ca.gov

THROTTLE BY WIRE SINGLE BORE TUNED INDUCTION REPLACEMENT PARTS
FOR 2008–2016 TOURING MODELS

1. Intake Runner, Kit, Single Bore, 2.19", 2008-Up Touring (See page 68)
2. Installation Kit, Throttle by Wire, 2008-up bt. **106-4851**
3. Intake Runner, Single Bore, w/Gasket & Air Filter, 2.19"
   - Gloss Black **170-0454**
   - Chrome Plated . . . . . **106-4967±**
4. Breather, Kit, Throttle by Wire, 2008-up bt. **106-4827**
5. Mount, Kit, Spacer/Adapter, Throttle by Wire, 2008-up bt. **106-4824**
6. Cover, Induction Module, Throttle by Wire, Plastic, 2008-up **106-3612**
7. Screw, FHSC, ¼-20 x ¾", Zinc Plated **50-0491**
8. Screw, FHSC, ¼-20 x 1", Black Chrome . . . . . **106-4828±**
9. Screw, FHSC, ¼-20 x 1½", Black Chrome. . . . . **106-4829±**
10. Screw, SHC, ¼-20 x ¾", Chrome, ASTM A574-92A *40691A* . **50-0067±**
11. Washer, countersunk, external tooth, ¼" x ½", parkerized steel **106-4980**
12. Gasket, Intake Adapter, Throttle by Wire, 2008-up bt **106-4428**
13. Gasket, Intake Adapter, .020", 2.19", Gray, Paper. **17-1022**
14. Gasket, Throttle Body, Throttle by Wire, 2008-up bt *29645-08*
    - *each* **106-2643**
    - Gasket, S&S Throttle Hog, 58mm **160-0050**
    - Gasket, S&S Throttle Hog, 66mm & 70mm **160-0035**
15. Spacer, Plate, Throttle By Wire, Intake Runner, 2008-up bt **106-4826**
16. Adapter, Plate, Throttle by Wire, Intake Runner **106-3607**
17. Screw, Breather, ⅜-16 UNC, +.250, 2008 Touring *(each)* . . **106-2667**
18. Hose, Vent, Breather . . . . . USA 1,2 **17-0339**
19. Fitting, Vent, Aluminum Alloy *(each)* **17-0350**
    - *2 pack* **17-0355**
20. Washer, Flat, .375" x .813" x .063", Zinc, Steel
    - *each* **50-7051**
21. Washer, Flat, .380" x .880" x .024", Nitrile Rubber Coated, Cold Rolled Steel
    - *each* **50-7054**
    - *10 pack* **50-7059**
22. Washer, Flat, .520" x .880" x .024", Nitrile Rubber Coated, Cold Rolled Steel
    - *each* **50-7055**
    - *10 pack* **50-7057**
23. Clamp, Spring, 9/16" **50-8001**
24. Air Filter, with Clamp, Stainless Cap, Conical, 2⁷⁄₁₆" I.D. x 4"
    - Red *(each)* **17-1020**
    - Blue *(each)* **17-1023**
25. Intake Runner, Single Bore, 2.19" + Gasket
    - Natural **106-4968**
    - Gloss Black **170-0453**
    - Chrome Plated . . . . . **106-4970±**
26. Oil, Air Filter, 8 oz. (Not shown)
    - Red **106-1163**
    - Blue **106-1164**

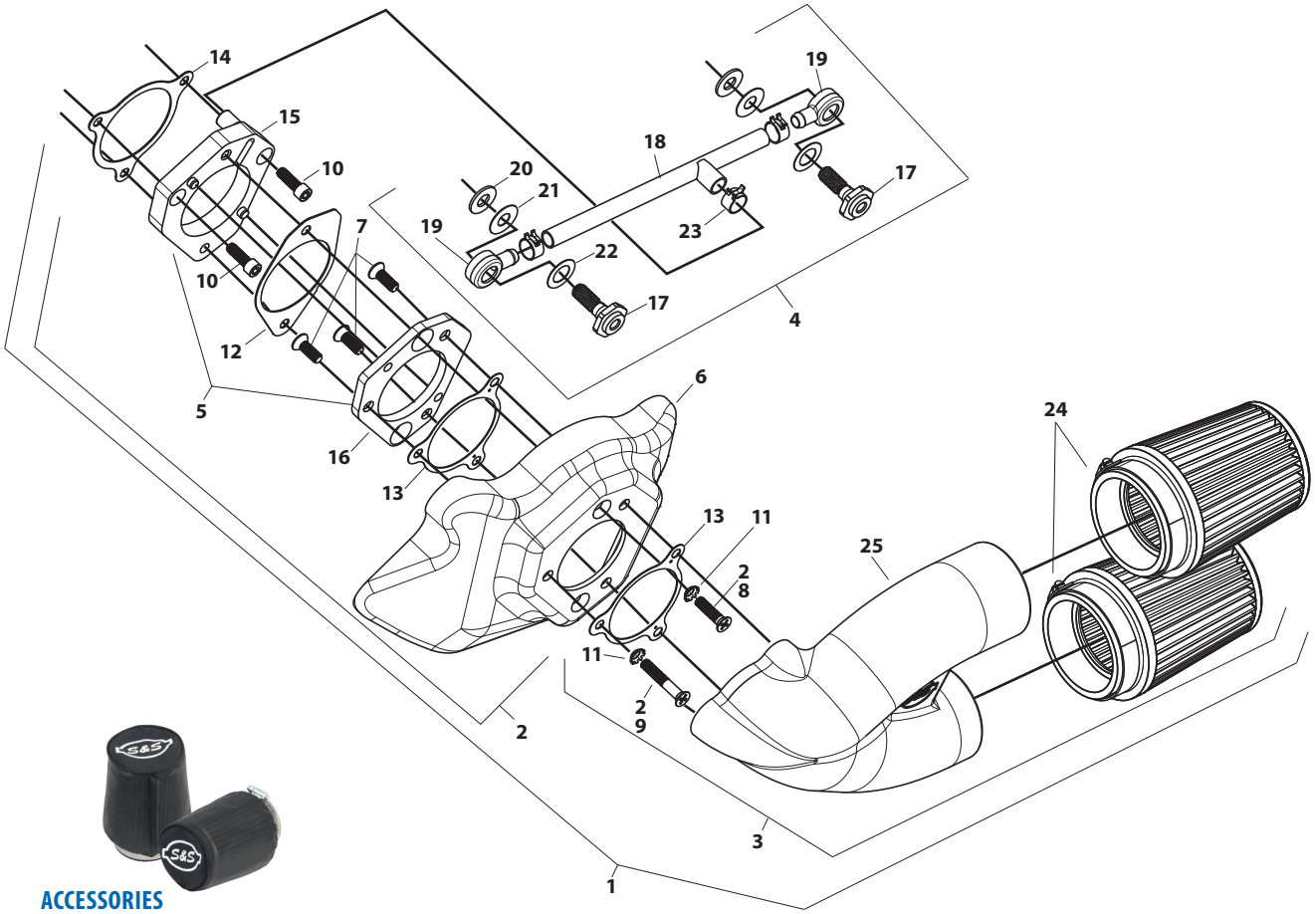

ACCESSORIES

Description		Part #
Nylon Air Filter Cover	*each*	**106-0247**
	2 pack	**106-0248**

± WARNING: Cancer and Reproductive Harm – www.P65Warnings.ca.gov

CLASSIC TEARDROP AIR CLEANER REPLACEMENT PARTS
FOR S&S® SINGLE BORE EFI

1. Air Cleaner Cover
- Slasher (slotted chrome) ..... **17-0004**±
- Chrome ..... **17-0378**±
- Gloss Black (includes black screws) **170-0384A**

2. Element, pleated **106-4722**

3. Backplate SBEFI
- 2006-'16 bt **17-0120**
- S&S 4⅛" bore engines **17-0380**

4. Screw, Cover, oval ¼-20 x 1
- Chrome *1305 (each)* ..... **50-0072**±
- *3 pack* ..... **50-1052**±
- *10 pack* ..... **50-0094**±
- Black *902 (each)* **50-0310-S**
- *3 pack* **50-0310**

5. Backplate screw
- Zinc Plated *(each)* **106-2084**
- *10 pack* **106-2105**

6. Pipe plug, ⅛, air cleaner backplate *(each)* **50-8331A**
- *10 pack* **50-1015**

7. Mounting bracket bolt, hex 5⁄16-18 x 1¼ **50-0110**

8. Flat washer, 5⁄16" x 1⁄16" *6320, 70907-07, 6016, 6702* **50-7034**

9. Shim, .850" x .325" x .400" **50-7027**

10. Shim kit for 4⅛" bore **17-0314**
Individual shims:
- 5⁄16" x .018" *(each)* **50-7038**
- 5⁄16" x .030" *(each)* **50-7039**
- 5⁄16" x .048" *(each)* **50-7040**
- 5⁄16" x .105" *(each)* **50-7041**

11. Screw,PH,10-24 x ¼",Zinc,Steel *(each)* **50-0041**
- *10 pack* **50-0062**

12. Clamp,Spring,.660" **50-8076-S**

13. Hose, Rear, Vent, Breather, Formed, Section 1, SAE J30 ..... **50-8262-S**

14. Hose,Rear,Vent,Breather,Formed,Section 2,SAE J30 ..... **50-8263-S**

15. Clamp,Spring,.440" **50-8143-S**

16. Hose,Cut To Size,.1875" x 6",Black,Rubber **50-8142AS**

17. Shims, individual
- 5⁄8 x 7⁄8 x .025 *(each)* **50-7113**
- *10 pack* **50-7110**
- 5⁄8 x 7⁄8 x .050 *(each)* **50-7114**
- *10 pack* **50-7111**
- 5⁄8 x 7⁄8 x .075 *(each)* **50-7115**
- *10 pack* **50-7112**

18. Air cleaner hardware kit
- 2006-'16 bt *(includes #4, 5, 6, 11, 17, 23)* **17-0482**
- S&S 4⅛" bore *(includes #4, 5, 6, 7, 8, 9, 10, 11)* **17-0481**

19. Silicone washer, ½" ID *(each)* **50-7055**
- *10 pack* **50-7057**

20. Silicone washer, ⅜" ID *(each)* **50-7054**
- *10 pack* **50-7059**

21. Hose,Vent,Breather,Epichlorohydrin Polymer ..... USA 1,2 **17-0339**

22. Clamp,Spring,9⁄16" **50-8001**

23. Screw, wide head, 5⁄16-24 x 36. ..... **17-0346**

24. Breather vent fitting
- 2006-'16 bt **17-0345**

25. Breather fitting *(each)* **17-0350**
- *2 pack* **17-0355**

26. Check Valve **50-8122**

27. Breather hardware for 2006-'16 bt* **17-0455**

28. Breather hardware for 4⅛" bore* **31-2104**
(*Not included in air cleaner kit)

± ⚠ WARNING: Cancer and Reproductive Harm – www.P65Warnings.ca.gov

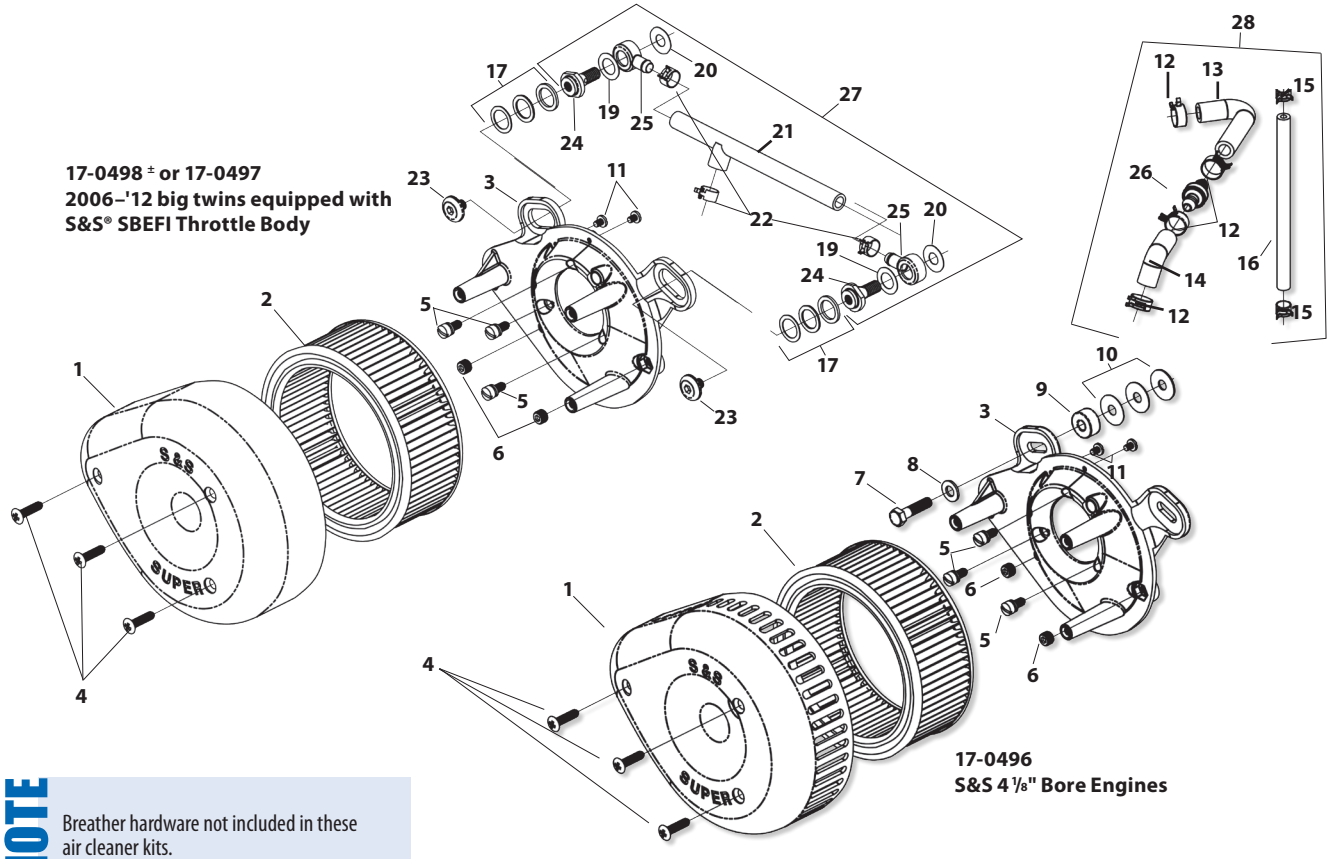

NOTE

Breather hardware not included in these air cleaner kits.

CLASSIC TEARDROP AIR CLEANER REPLACEMENT PARTS
FOR STOCK FUEL SYSTEMS

1. Air cleaner cover
- Chrome ..... **17-0378**±
- Gloss Black (includes black screws) **170-0384A**
- Slasher ..... **17-0004**±

2. Filter Element
- a. Pleated **106-4722**
- b. Foam *(for 17-0444 kit only)* **17-0079**

3. Backplate
- a. 2006-'16 bt *(except 2008-'16 touring models)* **106-0907**
- b. 2008-'16 touring models **106-2092**
- c. 2006-up Dyna® models & all 2007 bt with stock EFI ..... **N/A**

4. Cover screw, *1305*
- Chrome *(each)* ..... **50-0072**±
- *3 pack* ..... **50-1052**±
- *10 pack* ..... **50-0094**±
- Black *(each)* **50-0310-S**
- *3 pack* **50-0310**

5. Backplate screw, Zinc Plated *(each)* **106-2084**
- *10 pack* **106-2105**

6. Backplate plug ⅛"-27 *(each)* **50-8331A**
- *10 pack* **50-1015**
- Backplate plug .285" x .170" **50-8306**

7. Gasket, backplate
- CV Adaptor, .0625" *(each)* **106-1724**
- *10 pack* **106-2328**
- 2006 - '12 bt *29062-95B* **106-6022**

8. Adaptor assembly
- 2006-'12 bt *(except 2008-'12 touring models)* ..... **106-0881**±
- 2008-'12 touring models **106-1716**

9. Hose, vent, breather, .250" x .375" x 1.825" *(each)* **17-0364A**

10. Clamp, spring, 9/16" **50-8001**

11. Screw, w/lockwasher SLTD FH,¼-20 x ¾",Zinc,Steel **50-0073**

12. Banjo fitting *(each)* **17-0350**
- *2 pack* **17-0355**

13. Washer, silicone coated steel, ⅜" (*each*) **50-7054**
- *10 pack* **50-7059**

14. Breather screw
- a. +.250", 2006-'12 bt *(except 2008-'12 touring models)* **17-0348**
- b. ⅜-16 UNC, +.250, 2008-'12 Touring *(each)* **106-2667**
- c. ⅜-16 NC, 2006-up Dyna models & all 2007 bt **17-0345**

15. Replacement shims
- ⅝" x .025" *(each)* **50-7113**
- *10 pack* **50-7110**
- ⅝" x .050" *(each)* **50-7114**
- *10 pack* **50-7111**
- ⅝" x .075" *(each)* **50-7115**
- *10 pack* **50-7112**

16. Screw, LSHC, ¼-20 x ½", zinc plated *(each)* **106-2037**
- *10 pack* **106-2125**

17. Gasket, throttle body, throttle by wire, 2008-up BT *29645-08*
- *each* **106-2643**

18. Hose, vent, breather ..... USA 1,2 **17-0339**

19. Washer, flat, .375" x .813" x .063", zinc, steel
- *each* **50-7051**

20. Washer, silicone coated steel ½" *(each)* **50-7055**
- *10 pack* **50-7057**

21. Cover, breather screw, chrome, aluminum ..... **106-2022**±

22. Screw, LSHC, 5/16-24 x ½", stainless steel **106-2023**

23. Screw, Backplate Vent, Special Socket Panhead, 5/16-24 x .360", Zinc, Alloy Steel **17-0346**

24. Clamp, Spring, .660" **50-8076-S**

25. Nut, HH, ¼-28 UNC-2B x .328", Zinc, Steel **50-5010**

26. Vent hose, with angle cut **17-0365**

27. Hose fitting **17-0336C-S**

28. Flatwasher, ¼" *6194, 6245, 6703, 6736, 6228W, 6192 (each)* **50-7021**

29. Carb support bracket ..... **N/A**

30. Shim - ¼" x ¾" x .200" **50-7024**

31. Mounting Hardware Kit
- 2006-'12 bt *(except 2008-'12 touring models)* **106-0838**
  (includes 7,5,25,11,9,19,14,12,10,26,33)
- 2008-'12 touring models **106-2102**
  (includes 7,23,24,15,5,16,22,17,11,18,12,19,10,27,33)

32. Cable Tie (N/S) **50-8003**

33. Screw,PH,¼-20 x 1",Nickel,Stainless Steel *1305* (N/S) **50-0072**

(N/S) = Not Shown

± ⚠ WARNING: Cancer and Reproductive Harm – www.P65Warnings.ca.gov

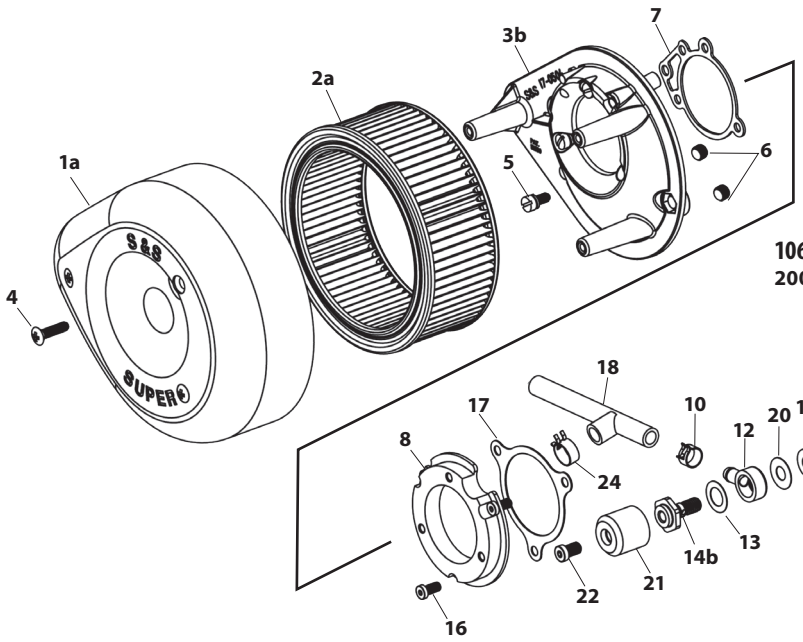

106-2091±
2008–'16 touring models with stock EFI throttle body

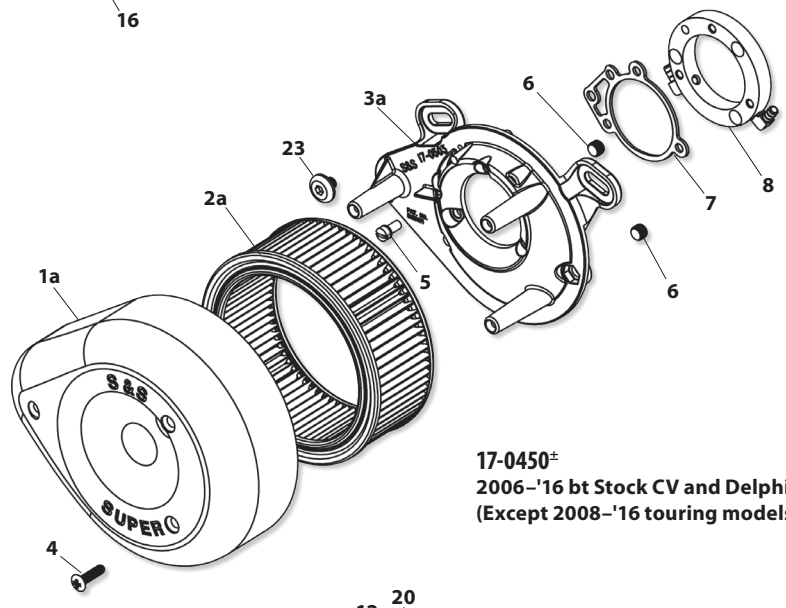

17-0450±
2006–'16 bt Stock CV and Delphi® Single Bore EFI
(Except 2008–'16 touring models)

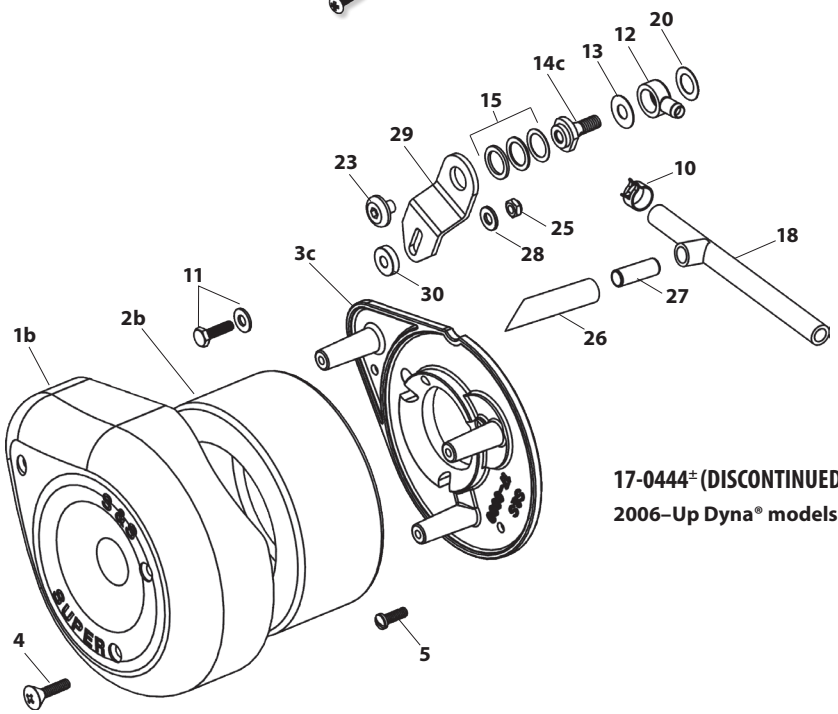

17-0444± (DISCONTINUED)
2006–Up Dyna® models & All 2007 big twin models with stock EFI

SLASH CUT SLIP-ONS FOR DYNA® MODELS REPLACEMENT PARTS

Kit Part #s: 550-0718± and 550-0720

1. Slash Cut Muffler Assembly, Front or Rear
   - Chrome ..... **551-0308±**
   - Black **551-0311**
2. Main Baffle Assembly **551-0301**
3. dB Reducer Baffle **551-0350**
4. Button head cap screw, Stainless, ¼"-20x3/8"1
   (Hold Main baffle assy to muffler shell) **500-0441**
5. Socket head cap screw, Stainless, 10-32x3/8"
   (Hold db reducer baffle to main baffle assy) **500-0570**

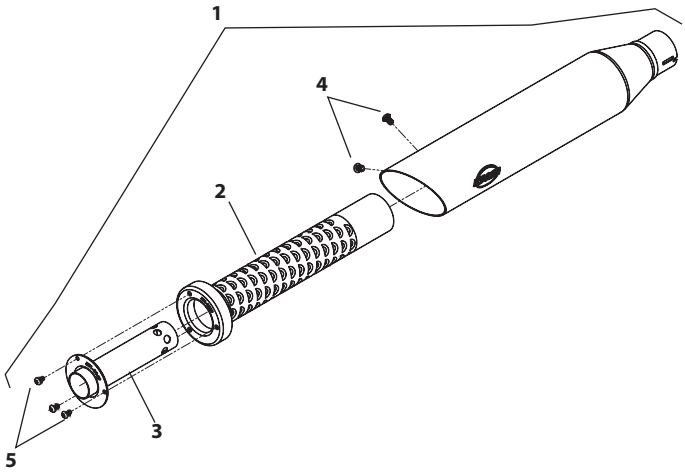

Kit Part #s: 550-0722± and 550-0724

6. Top Muffler Assembly Slash Cut
   - Chrome ..... **551-0320±**
   - Black **551-0323**
7. Bottom Muffler Assembly,Slash Cut
   - Chrome ..... **551-0326±**
   - Black **551-0329**
8. Main Baffle Assembly **551-0301**
9. dB Reducer Baffle **551-0350**
10. Button head cap screw, Stainless, ¼"-20x3/8"
    (Hold Main baffle assy to muffler shell) **500-0441**
11. Socket head cap screw, Stainless, 10-32x3/8"
    (Hold db reducer baffle to main baffle assy) **500-0570**

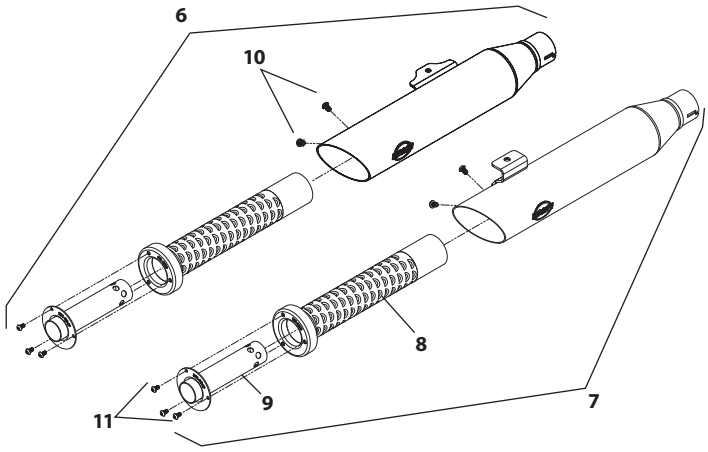

± WARNING: Cancer and Reproductive Harm – www.P65Warnings.ca.gov

GRAND NATIONAL® SLIP-ONS FOR DYNA® MODELS REPLACEMENT PARTS

Kit Part #s: 550-0719 and 550-0721

1. Grand National Muffler Assembly Front or Rear
   Chrome ..... **551-0314**±
   Black. **551-0317**
2. Endcap **551-0292**
3. Main Baffle Assembly **551-0299**
4. dB Reducer Baffle **551-0304**
5. Button head cap screw, Stainless, ¼"-20x3/8"
   (Hold Main baffle assy to muffler shell) **500-0441**
6. Socket head cap screw, Stainless, 10-32x3/4"
   (Hold Endcap to main baffle assy) **500-0569**
7. Insulation, Muffler, Pillow Pack **551-0305**

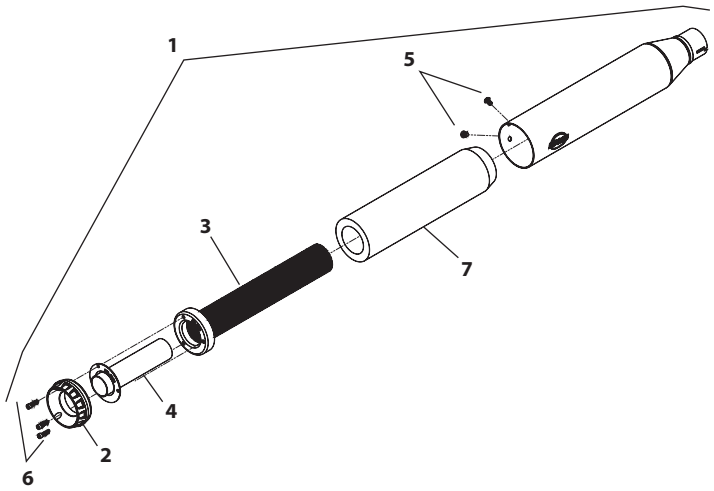

Kit Part #s: 550-0723 and 550-0725

8. Muffler Assembly, Grand National, Top
   Chrome ..... **551-0332**±
   Black. **551-0335**
9. Muffler Assembly, Grand National, Bottom
   Chrome ..... **551-0338**±
   Black. **551-0341**
10. Endcap **551-0292**
11. Main Baffle Assembly **551-0299**
12. dB Reducer Baffle **551-0304**
13. Button head cap screw, Stainless, ¼"-20x3/8"
    (Hold Main baffle assy to muffler shell) **500-0441**
14. Socket head cap screw, Stainless, 10-32x3/4"
    (Hold Endcap to main baffle assy) **500-0569**
15. Insulation, Muffler, Pillow Pack **551-0305**

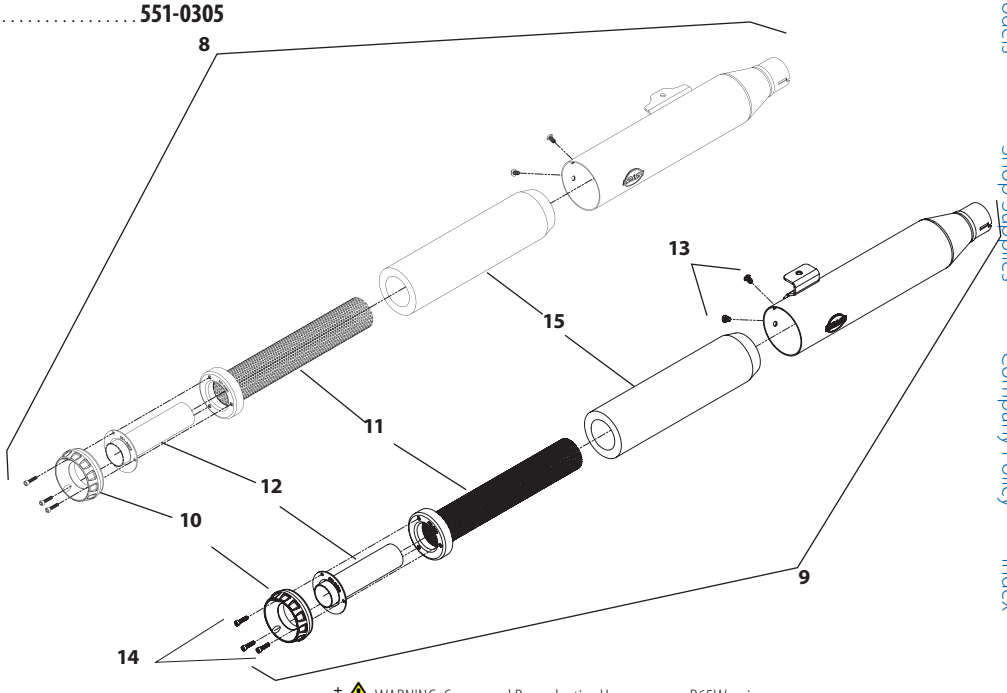

± WARNING: Cancer and Reproductive Harm – www.P65Warnings.ca.gov

Mk45 4.5" MUFFLER REPLACEMENT PARTS

1. 4.5" Muffler Assembly
- Left, Chrome ..... **551-0020**±
- Right, Chrome ..... **551-0021**±
- Left, Black **551-0022**
- Right, Black **551-0023**

2. Endcap
- Thruster, Chrome ..... **550-0634A**±
- Thruster, Highlighted Machined **550-0629A**
- Tracer, Chrome ..... **550-0636A**±
- Tracer, Highlighted Machined **550-0632A**

3. Main Baffle Assembly, 4.5" Muffler **551-0007**

4. dB reducer **551-0026**

5. Insulation, 4.5" Muffler **551-0003**

6. Button Head Cap Screw, Stainless, ¼"-20 X ⅜" **500-0441**

7. Hardware Kit, Muffler Clamps And Screws (N/S) **551-0027**

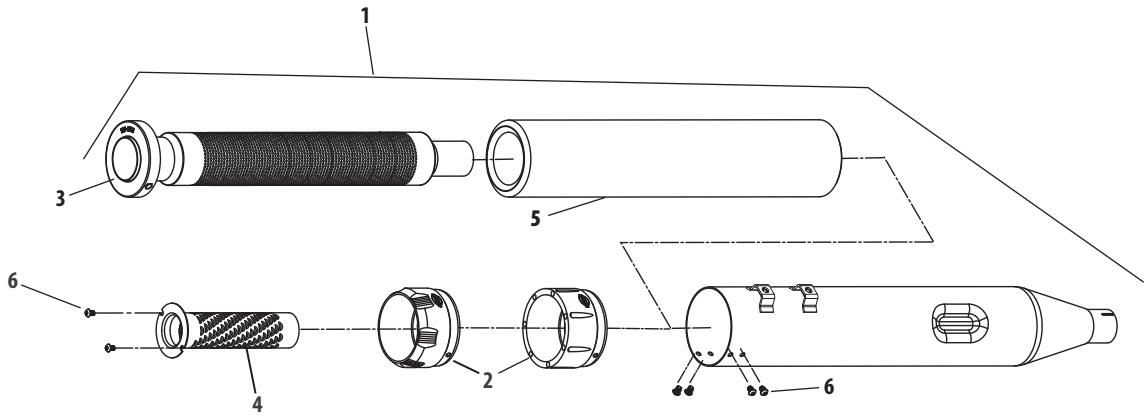

±⚠ WARNING: Cancer and Reproductive Harm – www.P65Warnings.ca.gov

GRAND NATIONAL® 4" REPLACEMENT PARTS

1. 4" Muffler assembly with Grand National Endcap
- Left, Chrome. . . . . **551-0055**±
- Right, Chrome . . . . . **551-0056**±
- Left, Black. **551-0057**
- Right, Black **551-0058**

3. Endcap (Left and Right). **551-0291**
4. Main baffle assembly (Left and Right). **551-0053**
5. dB reducer baffle (Left and Right). **551-0063**
6. Button head cap screw, Stainless, ¼"-20x ⅜" **500-0441**
7. Socket head cap screw, Stainless, 10-32x ¾" **500-0569**
9. Hardware kit, muffler clamps and screws (N/S) **551-0027**

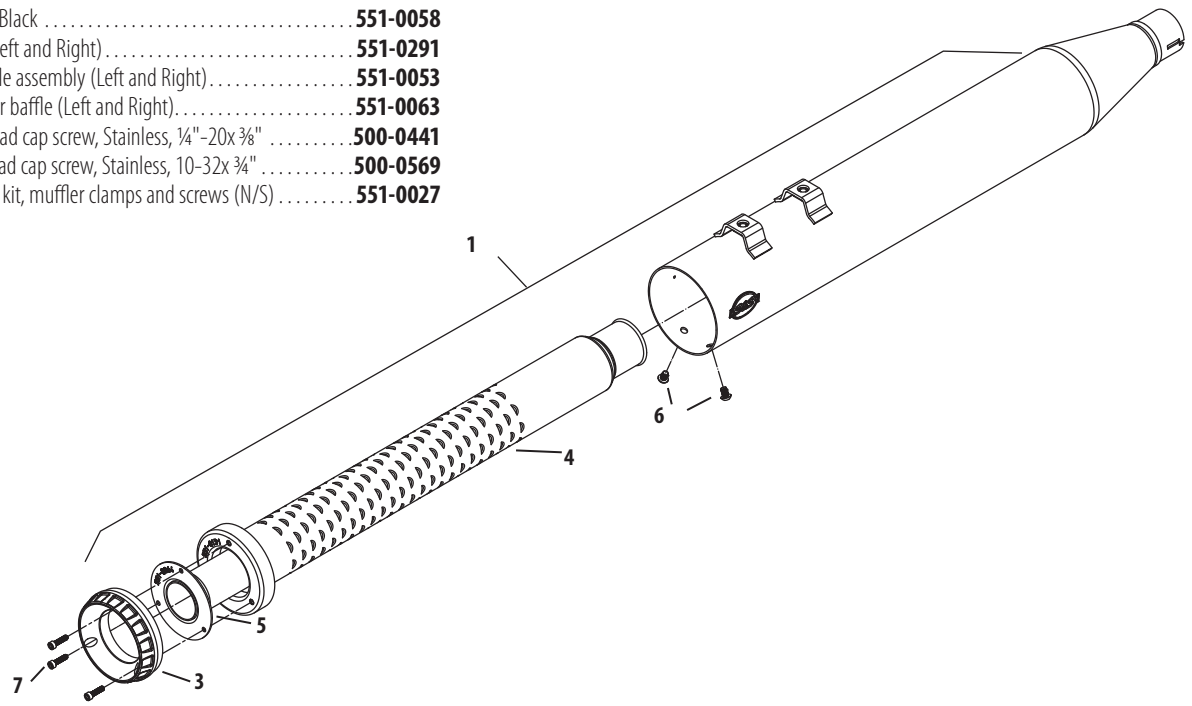

SLASH CUT 4" REPLACEMENT PARTS

1. 4" Muffler assembly Slash Down
- Left, Chrome. . . . . **551-0059**±
- Right, Chrome . . . . . **551-0060**±
- Left, Black. **551-0061**
- Right, Black **551-0062**

4. Main baffle assembly (Left and Right). **551-0053**
5. dB reducer baffle (Left and Right). **551-0063**
6. Button head cap screw, Stainless, ¼"-20x ⅜" **500-0441**
8. Button head cap screw, Stainless, 10-32x ⅜" **500-0570**
9. Hardware kit, muffler clamps and screws (N/S) **551-0027**

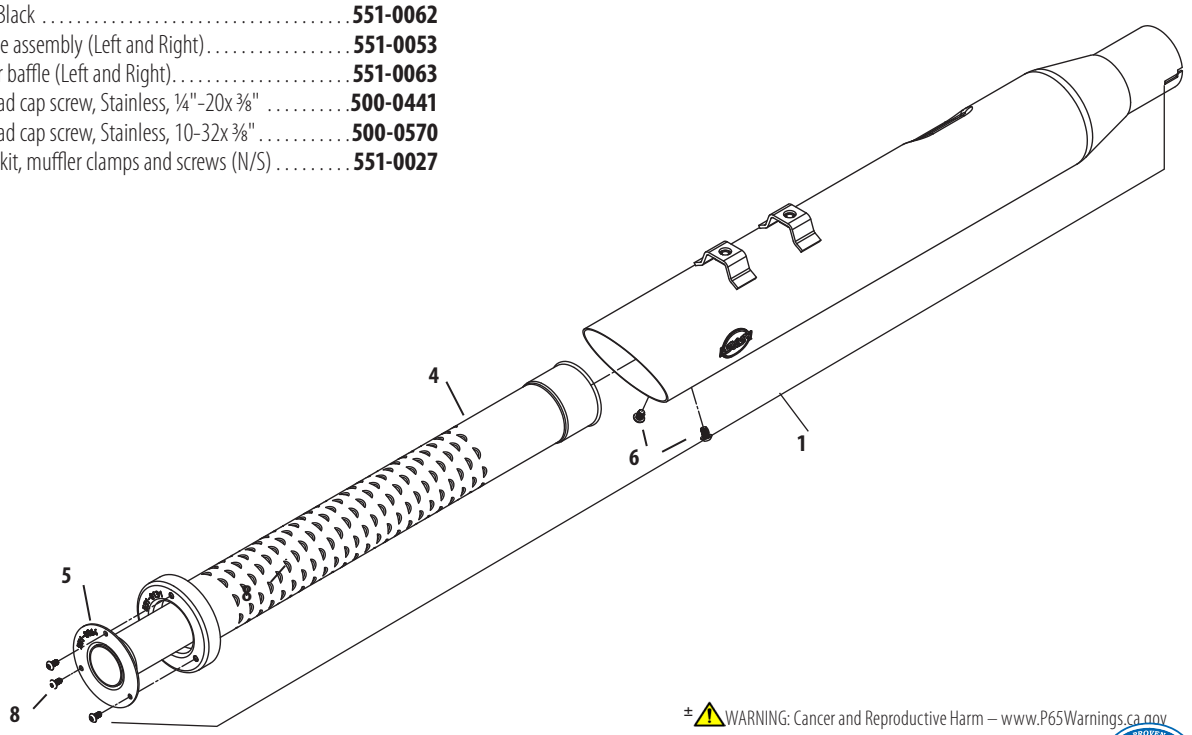

± WARNING: Cancer and Reproductive Harm – www.P65Warnings.ca.gov

SIDEWINDER® 2:1 EXHAUST REPLACEMENT PARTS

1. Header,Assembly,2 into 1,Sidewinder¨,Weldment, 1995-'16 Touring Modelss **551-0705**
2. Muffler, Street Legal
   - Chrome ..... **551-0529B±**
   - Black ..... **551-0530B±**
3. Collector, heat shield
   - Chrome ..... **551-0379±**
   - Black **551-0381**
4. Heat shield, front, 2:1, Sidewinder®, chrome, 1995-'16 touring models
   - Chrome ..... **551-0709±**
   - Black **551-0715**
5. Heat shield, rear, 2:1, Sidewinder®, chrome, 1995-2016 touring models
   - Chrome ..... **551-0712±**
   - Black **551-0717**
6. Clamp, header mount, 2:1, chrome plate, mild steel, 11 gauge, M8 2017 touring **551-0361**
7. Clamp, muffler, band style, 2.5" **551-0135**
8. Clamp, hose, worm drive, SAE #20 (qty. 3) **551-0527**
9. Clamp, hose, worm drive, SAE #40 ..... **551-0402**
10. Clamp, hose, worm drive, SAE #24 (qty. 3) **500-0791**
11. Adapter, oxygen sensor, 12mm to 18mm, stainless steel . **550-0375**
12. Gasket, exhaust, tapered, stainless steel, 1984-up bt, 1986-up xl *65324-83B, 65324-83A* **106-5029**
13. Bracket, header mount, 2:1, powdercoated, black, 2007-'16 touring models **551-0719**
14. Bracket, header mount, 2:1, powdercoated, black, 1995-'06 touring **551-0786**
15. Bolt, Carriage, 3/8-16 x 1-1/4" **500-0553**
16. Nut, Flanged, Serrated, 3/8-16 ..... **500-0554**
17. Nut, HSFH, 5/16-24 unf-2b x .283", Zinc, steel *7593* **50-5025-S**
18. Washer, spacer, floor board **551-0401**
19. Spacer, floor board, powdercoated, black **551-0399**
20. Screw, shc, 3/8-16 x 1-3/4", zinc, steel **500-0789**
21. Screw, shc, 3/8-16 x 2-3/4", zinc, steel **500-0790**
22. Screw, hh, flg, serrated, 5/16-18 x 1/2" **500-0744**
23. dB reducer **551-0026**
24. Endcap **551-0395**

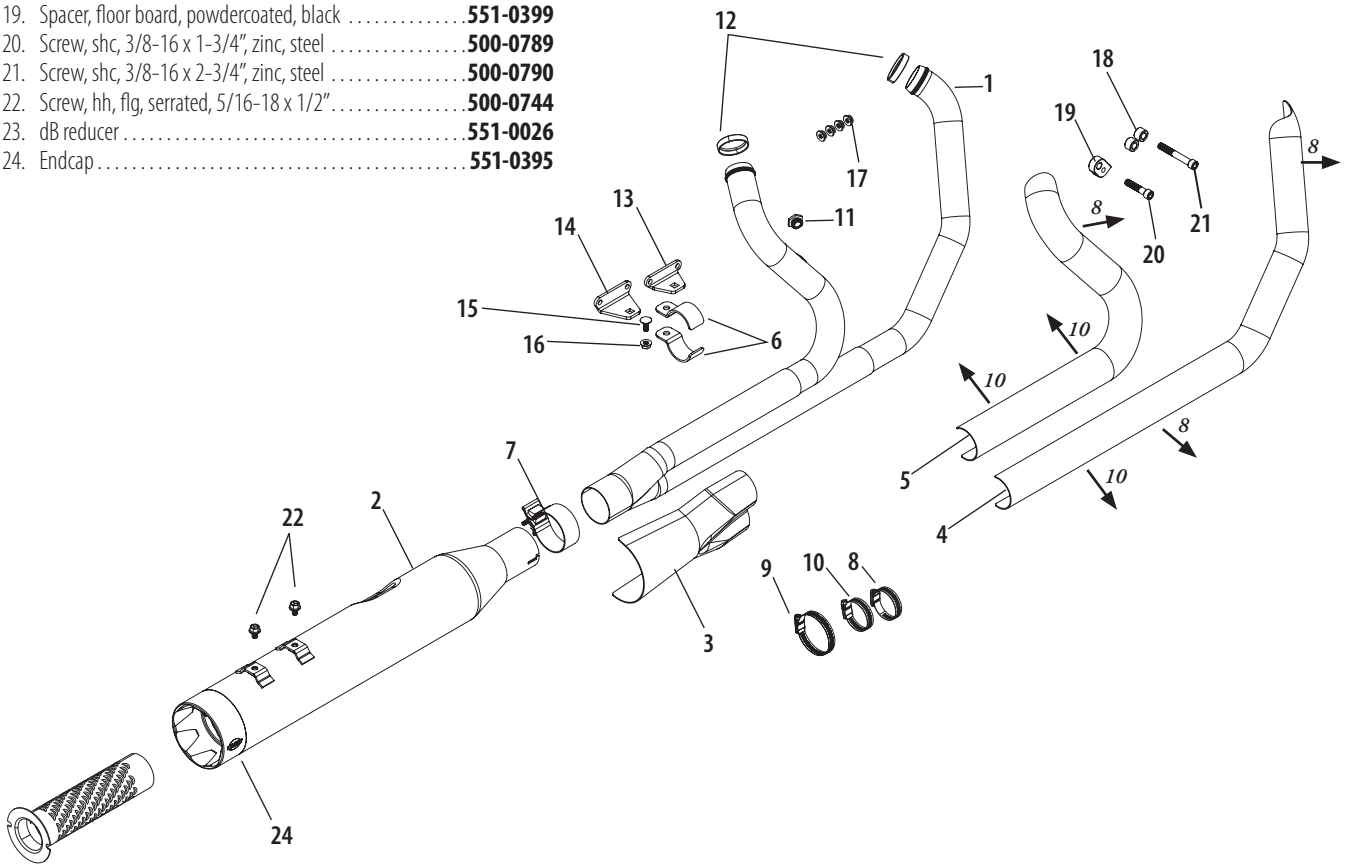

±⚠ WARNING: Cancer and Reproductive Harm – www.P65Warnings.ca.gov

GRAND NATIONAL® 2:2 EXHAUST REPLACEMENT PARTS

1. Pipe, Header, 2 Into 2, Weldment, 2006-'17 Dyna® **551-0496**
2. Shield, Rear, Upper, 2 Into 2, Outside Process, Black, 2006-'17 Dyna® **551-0506**
3. Shield, Front, 2 Into 2, Outside Process, Black, 2006-'17 Dyna® **551-0500**
4. Shield, Rear, Lower, 2 Into 2, Outside Process, Black, 2006-'17 Dyna® **551-0512**
5. Muffler, Assembly, Grand National, 2 Into 2, Cone Body, Black **551-0474**
6. Bracket, Mounting, 2 Into 2, Black, 2006-'17 Dyna® **551-0482**
7. Bracket, Top, Mounting, Muffler, 2 Into 2, Powdercoated, Black, 2006-'17 Dyna® **551-0571**
8. Bracket, Bottom, Mounting, Muffler, 2 Into 2, Powdercoated, Black, 2006-'17 Dyna® **551-0572**
9. Clamp, Muffler, Band Style, 1.75" Diameter, 3/8-16 X 1.57" Bolt **551-0569**
10. Gasket,Exhaust,Tapered,Stainless Steel,1984-up bt, 1986-up xl *65324-83B, 65324-83A* **106-5029**
11. Adapter, Oxygen Sensor, 12mm To 18mm, Stainless Steel **550-0375**
12. Plate, Nut, 5/16-18 X 2", Zinc Clear **551-0469**
13. Clamp, Hose, Worm Drive, SAE #20 ..... **551-0527**
14. Nut, hsfh, 5/16-24 Unf-2B X .283", Zinc, Steel *7593* **50-5025-S**
15. Screw, bhc, 5/16-18 X 5/8", Zinc Plated **500-0763**
16. Screw, shcs, 5/16-18 X 1-1/2", Zinc Plated **106-4401**
17. Screw, shcs, 5/16-18 X 2", Zinc Plated **500-0781**
18. Screw, bhc, 5/16-18 X 7/8", Zinc Plated **500-0801**
19. Spacer, Powdercoated, .625"X.332"X.55", Black **551-0570**
20. Gasket, Muffler, 3.25", 2018 M8 Softail® **551-0360**

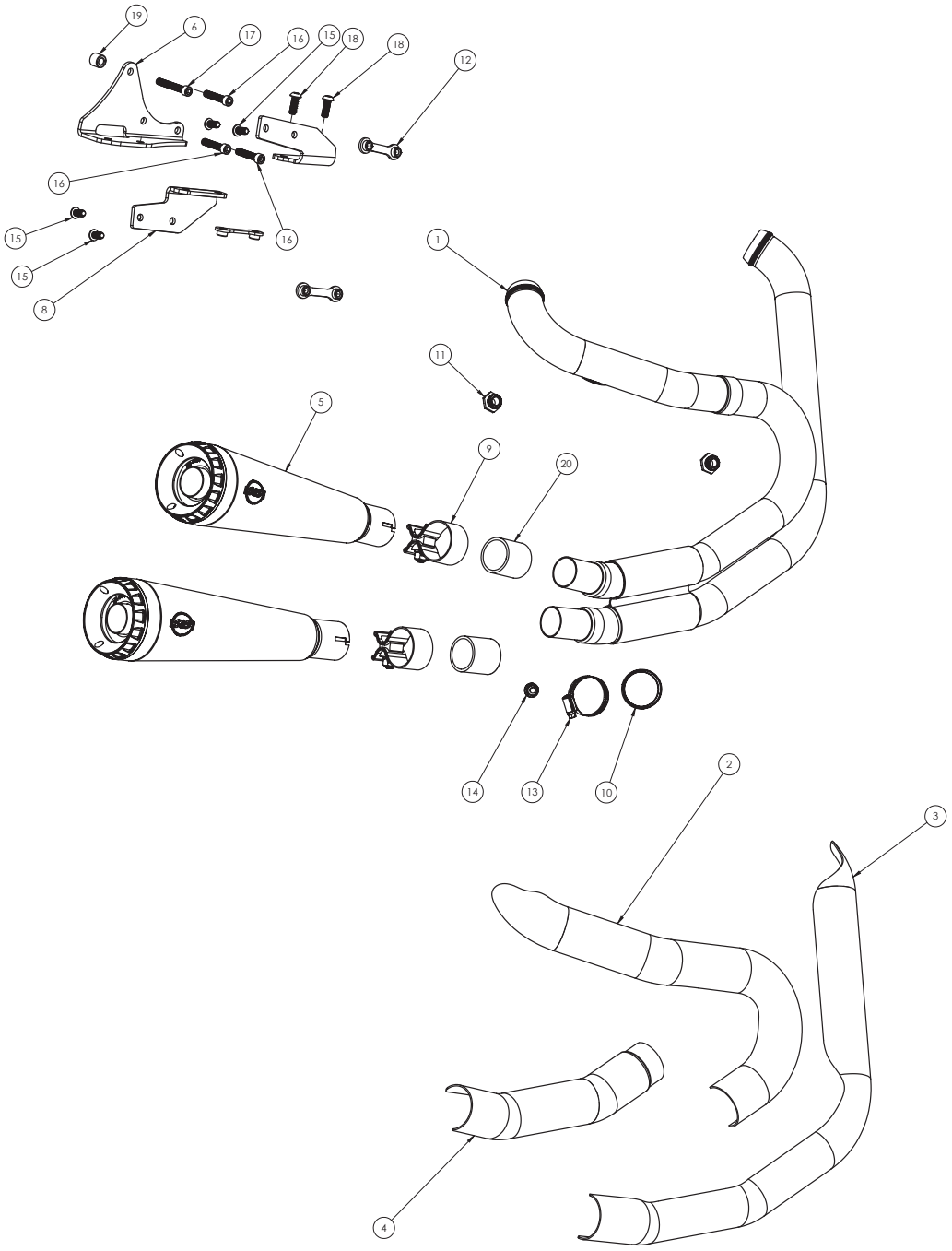

POWER TUNE® DUAL HEADER REPLACEMENTS

POWER TUNE® DUAL HEADERS

Fitment	Finish	Part #
1995–'08† big twins	Chrome ±	**550-0003A****
	Black	**550-0142A****
2009–'16 non-catalyst equipped touring and 2009–'18 Tri Glide†† models	Chrome ±	**550-0004B*****
	Black	**550-0143B*****

†Has 18mm sensor fittings in the stock locations for 2007–'08 bikes. If not equipped with oxygen sensors, the ports can be used for tuning. Plugs are included if ports are not used.

††Requires the Trike Adaptor Kit part # 550-0799. See page 62

**DISCLAIMER: NOT LEGAL FOR SALE OR USE IN CALIFORNIA ON ANY POLLUTION CONTROLLED MOTOR VEHICLE. Not legal for sale or use on EPA pollution controlled vehicles originally equipped with catalyst.
*Qualified manufacturer declared emissions replacement part on FL touring models listed below.
California Models: FL Touring Fuel Injected MY 1995-2003, and 2007; CVO FL Touring MY 2000-2003.
49 State Models: FL Touring Carbureted MY 1995-2005; FL Touring Fuel Injected MY 1995-2005 and 2007-2008; CVO FL Touring MY 2000-2005

***DISCLAIMER: NOT LEGAL FOR SALE OR USE IN CALIFORNIA ON ANY POLLUTION CONTROLLED MOTOR VEHICLE. Not legal for sale or use on EPA pollution controlled motorcycles originally equipped with a catalyst exhaust
*Qualified Manufacturer Declared Emissions Compliant Part for 2009 Harley-Davidson 49-State Non-CVO FL Touring Models Only

± ⚠ WARNING: Cancer and Reproductive Harm – www.P65Warnings.ca.gov

POWER TUNE® DUAL HEADER REPLACEMENT PARTS

1. Pipe, header, power tune dual, weldment, 2009-2016 touring **551-0084**
2. Gasket, exhaust, tapered, stainless steel, 1984-up bt, 1986-up xl *(2 Req) 65324-83B, 65324-83A* **106-5029**
3. Adapter, oxygen sensor, 12mm to 18mm, stainless steel *(2 Req)* **550-0375**
4. Bolt, carriage, ⅜"-16 x 1-¼" **500-0553**
5. Nut, flanged, serrated, ⅜"-16 ..... **500-0554**
6. Clamp, muffler, band style **551-0569**
7. Tube, crossover, power tune dual, formed, 2009-2016 touring **551-0080**
8. Shield, left, power tune dual,
   Chrome, 2009-2016 touring ..... **551-0115±**
   Black, 2009-2016 touring **551-0116**
9. Nut, HSFH, 5⁄16-18 UNC-2b x .283", Zinc, steel **50-5053-S**
10. Clamp, p-style, crossover, power tune dual header, 2009-2016 touring **551-0121**
11. Bolt, carriage, 5⁄16"-18 x ¾" **500-0555**
12. Clamp, hose *(8 Req)* **551-0527**
13. Shield, front, power tune dual,
    Chrome, 2009-2016 touring ..... **551-0097±**
    Black, 2009-2016 touring **551-0098**
14. Shield, rear, power tune dual,
    Chrome, 2009-2016 touring **551-0103**
    Black, 2009-2016 touring **551-0104**
15. Clamp, p-style, power tune dual, side, 1995-2016 touring **551-0119**
16. Nut, HSFH,5/16-24 ..... **50-5025-S**

Not Shown

Hardware kit, power tune dual, header, 2009-2016 touring
Includes items 2–6, 9–12, 15, and 16 ..... **551-0155**

± ⚠ WARNING: Cancer and Reproductive Harm – www.P65Warnings.ca.gov

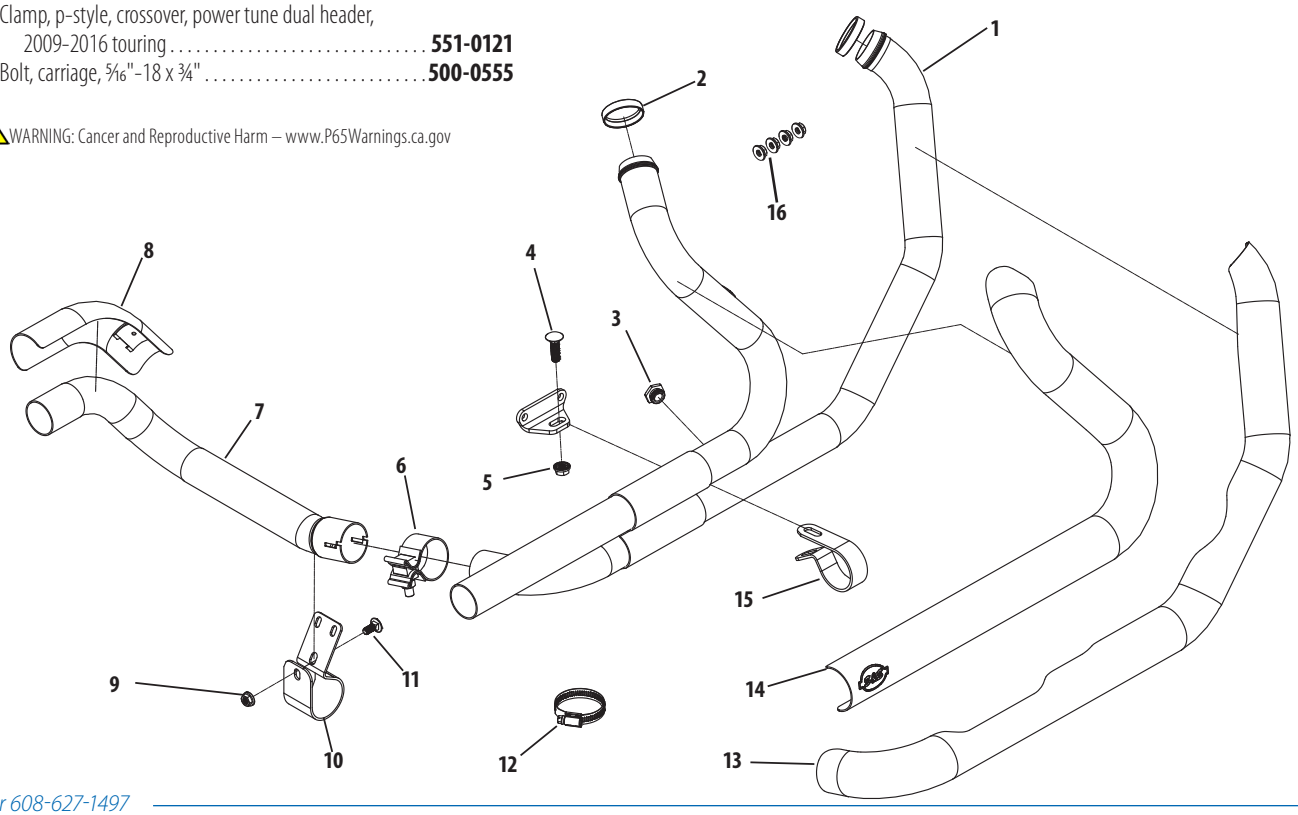

1999–2006 BIG TWINS



Performance Kits

4" Bore Sidewinder Big Bore Kit..163
95" Hot Set Up Kit.....167
97" Big Bore Kits.....166
98" Big Bore Kits.....166
106" Stroker Kits.....165
124" Hot Set Up Kit.....164
Performance Kit Overview.....162
Power Pack.....179

Performance Engines

T143 Engines.....169
T-Series Long Block Engines.....170

Performance Parts

Air Cleaners.....155
Camshafts.....180
Carburetors.....198
Crankcases.....171
Cylinder Heads.....190
Cylinders & Pistons.....176
Drive Belts.....207
Electronics.....203
Exhaust.....149
Flywheels.....173
Gaskets.....208
Gearcovers.....175
Manifolds.....196
Oil Pumps.....174
Pushrods.....186
Rocker Arms.....189
Rocker Covers.....195
Tappets.....185
Throttle Bodies.....197
Transmission.....205
Valve Springs.....188

Replacement Parts..... 212

SIDEWINDER® 2:1 EXHAUST
FOR 1995–'16 TOURING MODELS

- 2:1 styling for high-performance baggers
- Increased power and torque
- Available in show chrome or ceramic black finish
- Machined aluminum endcap
- Includes adapters that allow use of wide band or stock O2 sensors
- Stainless steel header construction
- Some fitments 50-State Legal: CARB EO# K-010-3
- Removable dB reducer included
- Made in the USA!



SIDEWINDER® 2:1 EXHAUST SYSTEM FOR 1995–'09 FL MODELS — 1995–'03, 2007 FL MODELS — CA EMISSIONS LEGAL††

Finish	Part #
Chrome with Black Highlighted Machined Endcap	**550-0776**
Black with Black Highlighted Machined Endcap	**550-0777**

††DISCLAIMER: NOT LEGAL FOR SALE OR USE IN CALIFORNIA ON ANY POLLUTION CONTROLLED MOTOR VEHICLE. Not legal for sale or use on EPA pollution controlled vehicles originally equipped with catalyst.
*Qualified manufacturer declared emissions replacement part on FL touring models listed below.
California Models:
Fuel Injected Non-CVO FL Touring Model Years: 1995-2003 and 2007
CVO FL Touring Model Years: 2000-2003
49 State Models:
Fuel Injected Non-CVO FL Touring Model Years: 1995-2005 and 2007-2009
CVO FL Touring Model Years: 2000-2005
⚠WARNING: Cancer and Reproductive Harm – www.P65Warnings.ca.gov



REPLACEMENT PARTS: SEE 241

SLASH CUT SLIP-ON MUFFLERS FOR DYNA® MODELS

FITMENT

- 1995–2009 Dyna® models with staggered exhaust

FEATURES AND BENEFITS

- Up to 16% more horsepower and 10% more torque *(when used with Stealth Air Cleaner Kit)*
- Wake up your bike without breaking your budget
- Classic slash cut styling
- Show chrome or ceramic black finish
- SAE J2825 sound level compliant
- 50-state legal
- Removable dB reducer
- Made in USA!



Removable dB reducer



SLASH CUT MUFFLERS FOR 1995–2009 DYNA® MODELS WITH STAGGERED EXHAUST

Finish	Part #
Chrome	**550-0718**
Black	**550-0720**

DISCLAIMER: NOT LEGAL FOR SALE OR USE IN CALIFORNIA ON ANY POLLUTION CONTROLLED MOTOR VEHICLES. Not legal for sale or use on EPA pollution controlled motorcycles originally equipped with mufflers containing catalyst.

*Qualified Manufacturer Declared Emissions Replacement Part on the Dyna Models Listed Below.

California Models: MY 2006-2007, Except CVO models

49 State Models: MY 1995-2009, Except CVO models

⚠WARNING: Cancer and Reproductive Harm – www.P65Warnings.ca.gov

REPLACEMENT PARTS: SEE PAGE 240

GRAND NATIONAL® SLIP-ON MUFFLERS FOR DYNA® MODELS

FITMENT

- 1995–2009 Dyna® models with staggered exhaust

FEATURES AND BENEFITS

- Up to 17% more horsepower and 9% more torque *(when used with Stealth Air Cleaner Kit)*
- Race inspired Grand National endcaps
- Show chrome or ceramic black finish
- Deep performance rumble
- SAE J2825 sound level compliant
- 50-state legal
- Removable dB reducer
- Made in USA!



Removable dB reducer



GRAND NATIONAL® MUFFLERS FOR 1995–2009 DYNA® MODELS WITH STAGGERED EXHAUST

Finish	Part #
Chrome	**550-0719**
Black	**550-0721**

DISCLAIMER: NOT LEGAL FOR SALE OR USE IN CALIFORNIA ON ANY POLLUTION CONTROLLED MOTOR VEHICLES. Not legal for sale or use on EPA pollution controlled motorcycles originally equipped with mufflers containing catalyst.

*Qualified Manufacturer Declared Emissions Replacement Part on the Dyna Models Listed Below.

California Models: MY 2006-2007, Except CVO models

49 State Models: MY 1995-2009, Except CVO models

⚠ WARNING: Cancer and Reproductive Harm – www.P65Warnings.ca.gov

REPLACEMENT PARTS: SEE PAGE 240

SLASH CUT 4" SLIP-ON [illegible]S

FITMENT

- 1995–2016 Harley-Davidson® touring models with non-catalyst mufflers

FEATURES AND BENEFITS

- Available in show chrome or ceramic black finish
- Show quality chrome or ceramic black finish
- Economical price
- High flow baffle
- Aggressive sound & excellent HP
- Excellent clearance on trike models
- SAE J2825 sound level compliant
- Removable dB reducer
- Made in USA!





Removable dB reducer

SLASH CUT 4" TOURING MUFFLERS FOR 1995–2016 BIG TWINS

Finish	Part #
Chrome	**550-0691**
Black	**550-0692**

DISCLAIMER: NOT LEGAL FOR SALE OR USE IN CALIFORNIA ON ANY POLLUTION CONTROLLED MOTOR VEHICLES. Not legal for sale or use on EPA pollution controlled motorcycles originally equipped with mufflers containing catalyst.

*Qualified manufacturer declared emissions replacement part on the FL touring models listed below.

California FL Touring Models:
Fuel Injected MY 1995-2003, 2007, and 2009-2016
CVO MY 2000-2003, and 2009-2016
49 State FL touring Models:
Carbureted MY 1995-2005
Fuel Injected MY 1995-2005, 2007-2016
CVO MY 2000-2005, and 2009-2016

⚠ WARNING: Cancer and Reproductive Harm – www.P65Warnings.ca.gov

REPLACEMENT PARTS: SEE PAGE 239

GRAND NATIONAL®
4" SLIP-ON MUFFLERS

FITMENT

- 1995–2016 Harley-Davidson® touring models with non-catalyst mufflers

FEATURES AND BENEFITS

- Available in show chrome or ceramic black finish
- Show quality chrome or ceramic black finish
- Economical price
- High flow baffle
- Aggressive sound & excellent HP
- Excellent clearance on trike models
- SAE J2825 sound level compliant
- Removable dB reducer
- Made in USA!

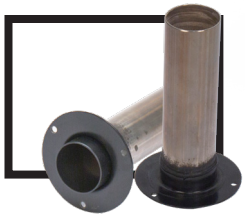

Removable dB reducer

GRAND NATIONAL® 4" MUFFLERS FOR 1995–2016 BIG TWINS

Finish	Part #
Chrome	**550-0689**
Black	**550-0690**

DISCLAIMER: NOT LEGAL FOR SALE OR USE IN CALIFORNIA ON ANY POLLUTION CONTROLLED MOTOR VEHICLES. Not legal for sale or use on EPA pollution controlled motorcycles originally equipped with mufflers containing catalyst.

*Qualified manufacturer declared emissions replacement part on the FL touring models listed below.
California FL Touring Models: Fuel Injected MY 1995-2003, 2007, and 2009-2016
CVO MY 2000-2003, and 2009-2016
49 State FL touring Models:
Carbureted MY 1995-2005
Fuel Injected MY 1995-2005, 2007-2016
CVO MY 2000-2005, and 2009-2016

⚠ WARNING: Cancer and Reproductive Harm – www.P65Warnings.ca.gov

Grand National

REPLACEMENT PARTS: SEE PAGE 239

Mk45 TOURING MUFFLERS

Mk45 4.5" Touring Mufflers are the result of decades of riding, racing and tuning. Combining both a stainless steel baffle and fiberglass packing, they create a deep rumble and improved horsepower and torque, all while adding a unique look with styled aluminum endcaps.



FITMENT

- 1995–2016 touring models

FEATURES AND BENEFITS

- 7 horsepower gain*
- Bold 4.5" design — with stainless steel baffle and RaceTEX cartridge packing
- Available in show quality chrome or ceramic black finish
- Choose from S&S® Thruster or Tracer end cap designs in chrome or black
- SAE J2825 sound level compliant
- 50-state legal
- Removable dB reducer
- Made in USA!

*Tested with S&S Power Tune® Dual Header and Stealth Air Cleaner Kit



Removable dB reducer

MK45 4.5" TOURING MUFFLERS W/ENDCAPS

Muffler Body Finish	Endcap Finish & Style	Part #
Chrome	Chrome Thruster	550-0620
	Black Highlight Machined Thruster	550-0619
	Chrome Tracer	550-0624
	Black Highlight Machined Tracer	550-0623
Ceramic black	Chrome Thruster	550-0622
	Black Highlight Machined Thruster	550-0621
	Chrome Tracer	550-0626
	Black Highlight Machined Tracer	550-0625

DISCLAIMER: NOT LEGAL FOR SALE OR USE IN CALIFORNIA ON ANY POLLUTION CONTROLLED MOTOR VEHICLES. NOT LEGAL FOR SALE OR USE ON EPA POLLUTION CONTROLLED MOTORCYCLES ORIGINALLY EQUIPPED WITH MUFFLERS CONTAINING CATALYST.
*QUALIFIED MANUFACTURER DECLARED EMISSIONS REPLACEMENT PART ON THE FL TOURING MODELS LISTED BELOW.
CALIFORNIA FL TOURING MODELS:
FUEL INJECTED MY 1995-2003, 2007, AND 2009-2016
CVO MY 2000-2003, AND 2009-2016
49 STATE FL TOURING MODELS:
CARBURETED MY 1995-2005
FUEL INJECTED MY 1995-2005, 2007-2016
CVO MY 2000-2005, AND 2009-2016

⚠ WARNING: Cancer and Reproductive Harm – www.P65Warnings.ca.gov

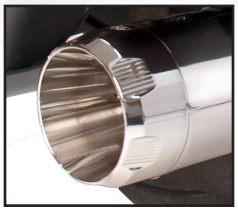

550-0620±

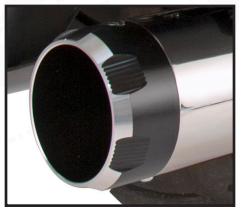

550-0619±

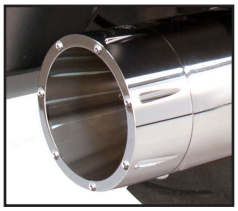

550-0624±

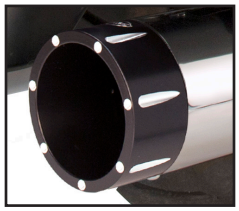

550-0623±



550-0622±



550-0621



550-0626±

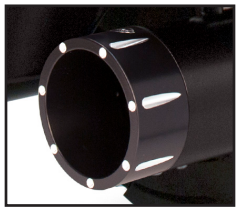

550-0625

REPLACEMENT PARTS: SEE PAGE 238

POWER TUNE® DUAL HEADERS

FITMENT

- Non-catalyst equipped Harley-Davidson® touring models‡
- 1995–'08 touring big twins

FEATURES AND BENEFITS

- Adds 8 horsepower over stock header pipes
- Independent dual look with hidden crossover
- Exclusive design moves the rear cylinder header away from the passenger to reduce radiated heat
- Full chrome or ceramic black heat shielding with 220º coverage
- Updated styling to give the bike a modern look
- Oxygen sensor bungs*
- Spherical inlet design for improved sealing and exhaust gasket durability
- Hardware included to mount crossover pipe
- Exhaust port gaskets included
- Made in the U.S.A.

REPLACEMENT PARTS: SEE PAGE 242



550-0003A



550-0142A

POWER TUNE® DUAL HEADERS

Fitment	Finish	Part #
1995–'08* big twins	Chrome	**550-0003A**
	Black	**550-0142A**

**Has 18mm sensor fittings in the stock locations for 2007–'08 bikes. If not equipped with oxygen sensors, the ports can be used for tuning. Plugs are included if ports are not used.*

DISCLAIMER: NOT LEGAL FOR SALE OR USE IN CALIFORNIA ON ANY POLLUTION CONTROLLED MOTOR VEHICLE. Not legal for sale or use on EPA pollution controlled vehicles originally equipped with catalyst.

*Qualified manufacturer declared emissions replacement part on FL touring models listed below.

California Models:
FL Touring Fuel Injected MY 1995-2003, and 2007
CVO FL Touring MY 2000-2003
49 State Models:
FL Touring Carbureted MY 1995-2005
FL Touring Fuel Injected MY 1995-2005 and 2007-2008
CVO FL Touring MY 2000-2005

⚠WARNING: Cancer and Reproductive Harm – www.P65Warnings.ca.gov

SPECIAL NOTES

It may be necessary to re-jet the carburetor or recalibrate the fuel injection system for best performance when a change is made in the exhaust system.

Dyno results are from tests performed at the S&S® Research and Development facility in Viola, Wisconsin.

NEW FOR 2020 FROM S&S CYCLE

STEALTH TRIBUTE AIR CLEANER KITS

CLASSIC DESIGN — STEALTH FITMENT

Conceived by S&S founder and brought to market by his son George B. Smith, the Classic Two Throat carb and matched air cleaner served as a performance milestone in the v-twin space for over a decade. Inspired by the unique style of our Two Throat intake, S&S has created the new "Tribute" air cleaner cover and wrapped it around our proven Stealth filter system creating a classic look combined with modern performance.

COVERS *ONLY*

Chrome	**170-0592**	*$171.95*
Gloss Black	**170-0593**	*$171.95*



STEALTH TRIBUTE COVER AIR CLEANER KITS

KIT INCLUDES STEALTH AIR CLEANER 170-0300B WHICH IS EXEMPT FROM EMISSIONS TAMPERING REGULATIONS UNDER CARB EO# D-355-27

Fitment	Finish	Part #
2001–'17 big twin *(except Throttle by Wire)*	Chrome±	**170-0596**
	Gloss Black	**170-0599**

±⚠ WARNING: Cancer and Reproductive Harm – www.P65Warnings.ca.gov

CARB compliant EO #D-355-27



STEALTH AIR CLEANER KITS

STEALTH TRIBUTE KITS
SEE PAGE 155

CARB compliant
EO #D-355-27

FITMENT

- 1999–2006 big twins

FEATURES AND BENEFITS

- Air directional stinger cone in the filter
- Use with any of several S&S designed covers. See page 158
- High flow (1" taller) filter kit available



STEALTH TEARDROP AIR CLEANER KITS

KIT INCLUDES STEALTH AIR CLEANER 170-0300B WHICH IS EXEMPT FROM EMISSIONS TAMPERING REGULATIONS UNDER CARB EO# D-355-27

Fitment	Fuel System	Finish	Part #
2001–'17 big twin *(except 2017 touring models & Throttle by Wire)* *Includes Stealth AC Kit 170-0300B*	Stock EFI, Delphi® EFI	Chrome	**170-0528**±
		Gloss Black	**170-0529**

±⚠WARNING: Cancer and Reproductive Harm – www.P65Warnings.ca.gov



CARBON FIBER TEARDROP KIT

Fitment	Part #
2001–'17 bt *(except Throttle by Wire)*	**170-0499**

Kit includes Stealth Air Cleaner 170-0300B which is exempt from emissions tampering regulations under CARB EO# D-355-27



MINI TEARDROP AIR CLEANER KITS

KIT INCLUDES STEALTH AIR CLEANER 170-0300B WHICH IS EXEMPT FROM EMISSIONS TAMPERING REGULATIONS UNDER CARB EO# D-355-27

Fitment	Fuel System	Finish	Part #
2001–'17 big twin *(except 2017 touring models & Throttle By Wire)* *Includes Stealth AC KIT 170-0300B*	Stock EFI, Delphi® EFI	Chrome	**170-0441**±
		Gloss Black	**170-0442**

±⚠WARNING: Cancer and Reproductive Harm – www.P65Warnings.ca.gov



AIR 1 COVER AIR CLEANER KIT

KIT INCLUDES STEALTH AIR CLEANER 170-0300B WHICH IS EXEMPT FROM EMISSIONS TAMPERING REGULATIONS UNDER CARB EO# D-355-27

Application	Fuel System	Part #
2001–'17 big twin *(except 2017 touring models & Throttle By Wire)* *Includes Stealth AC Kit 170-0300B*	Stock EFI Delphi®	**170-0478**



TRI-SPOKE COVER AIR CLEANER KIT

KIT INCLUDES STEALTH AIR CLEANER 170-0300B WHICH IS EXEMPT FROM EMISSIONS TAMPERING REGULATIONS UNDER CARB EO# D-355-27

Application	Fuel System	Part #
2001–'17 big twin *(except 2017 touring models & Throttle By Wire)* *Includes Stealth AC Kit 170-0300B*	Stock EFI Delphi®	**170-0476**



TORKER COVER AIR CLEANER KIT

KIT INCLUDES STEALTH AIR CLEANER 170-0300B WHICH IS EXEMPT FROM EMISSIONS TAMPERING REGULATIONS UNDER CARB EO# D-355-27

Application	Fuel System	Part #
2001–'17 big twin *(except 2017 touring models & Throttle By Wire)* *Includes Stealth AC Kit 170-0300B*	Stock EFI Delphi®	**170-0477**

CON'T NEXT PAGE

CON'T STEALTH AIR CLEANER KITS



AIRSTREAM COVER CLEANER KIT

KIT INCLUDES STEALTH AIR CLEANER 170-0300B WHICH IS EXEMPT FROM EMISSIONS TAMPERING REGULATIONS UNDER CARB EO# D-355-27

Application	Fuel System	Finish	Part #
2001–'17 big twin *(except 2017 touring models & Throttle By Wire)* *Includes Stealth AC Kit 170-0300B*	Stock EFI Delphi®	Chrome	**170-0479±**
		Gloss Black	**170-0480**

±⚠WARNING: Cancer and Reproductive Harm – www.P65Warnings.ca.gov



MUSCLE COVER AIR CLEANER KIT

KIT INCLUDES STEALTH AIR CLEANER 170-0300B WHICH IS EXEMPT FROM EMISSIONS TAMPERING REGULATIONS UNDER CARB EO# D-355-27

Application	Fuel System	Finish	Part #
2001–'17 big twin *(except 2017 touring models & Throttle By Wire)* *Includes Stealth AC Kit 170-0300B*	Stock EFI Delphi®	Chrome	**170-0481±**
		Gloss Black	**170-0482**

±⚠WARNING: Cancer and Reproductive Harm – www.P65Warnings.ca.gov



STEALTH AIR CLEANER KITS*—NO COVER

KIT INCLUDES STEALTH AIR CLEANER 170-0300B WHICH IS EXEMPT FROM EMISSIONS TAMPERING REGULATIONS UNDER CARB EO# D-355-27

Application	Fuel System	Part #
2001–'17 big twin *(except 2017 touring models, Throttle By Wire, & CVO® Models)*	Stock EFI Delphi®	**170-0300B**

Choose an S&S Cover (see page 158)

NOTES

Fuel injection tuning is not required with this product but is highly recommended for best results.

REPLACEMENT PARTS: SEE PAGE 225



AIRSTREAM COVER IN CHROME PLUS STEALTH AIR CLEANER KIT

Application	Fuel System	Part #
1999–'06 big twins *(except '99 Softail® carb & Throttle by Wire)*	Stock CV/EFI Delphi®	**170-0056**
1999–'06 big twins	S&S Super E & G Carbs	**170-0063**

DISCLAIMER: NOT LEGAL FOR SALE OR USE IN CALIFORNIA ON ANY POLLUTION CONTROLLED MOTOR VEHICLE. NOT LEGAL FOR SALE OR USE NATIONWIDE ON ANY FEDERAL POLLUTION CONTROLLED MOTOR VEHICLE UNDER THE CLEAN AIR ACT

⚠WARNING: Cancer and Reproductive Harm – www.P65Warnings.ca.gov



MUSCLE COVER IN CHROME PLUS STEALTH AIR CLEANER KIT

Applicationt	Fuel System	Part #
1999-'06 big twins *(except '99 Softail® carb & Throttle by Wire)*	Stock CV/EFI Delphi®	**170-0106**
1999-'06 big twins	S&S Super E & G Carbs	**170-0112**

DISCLAIMER: NOT LEGAL FOR SALE OR USE IN CALIFORNIA ON ANY POLLUTION CONTROLLED MOTOR VEHICLE. NOT LEGAL FOR SALE OR USE NATIONWIDE ON ANY FEDERAL POLLUTION CONTROLLED MOTOR VEHICLE UNDER THE CLEAN AIR ACT

⚠WARNING: Cancer and Reproductive Harm – www.P65Warnings.ca.gov

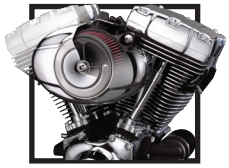

STEALTH AIR CLEANER KITS* — NO COVER

Application	Fuel System	Part #
1999–'06 big twins *(except '99 Softail® carb & Throttle by Wire)*	Stock CV/EFI Delphi®	**170-0060**
1999–'06 big twins	S&S Super E & G Carbs	**170-0058**

*These kits do not contain covers –*Choose an S&S Cover (see page 158)*

DISCLAIMER: NOT LEGAL FOR SALE OR USE IN CALIFORNIA ON ANY POLLUTION CONTROLLED MOTOR VEHICLE. NOT LEGAL FOR SALE OR USE NATIONWIDE ON ANY FEDERAL POLLUTION CONTROLLED MOTOR VEHICLE UNDER THE CLEAN AIR ACT

STEALTH AIR CLEANER KITS FOR S&S ENGINES

STEALTH AIR CLEANER KITS FOR S&S ENGINES

Fitment	Fuel System	Part #
2003–'17 HD® Models *(except '17 touring models)*	S&S 66mm Throttle Hog	**170-0165**
2003–'17 HD® Models *(except '17 touring models)*	S&S 58mm Throttle Hog	**170-0164**
1995–1999 S&S Super Stock Engines	S&S Single Bore VFI 52mm Throttle Bodies	**170-0287**
1995–1999 EFI big twins	S&S Single Bore VFI 58mm Throttle Bodies	**170-0283**
1999–2017 EFI big twins	S&S Single Bore VFI 58mm Throttle Bodies	**170-0284**
T124 1999–'06 bt *(except '06 Dyna®) (Engines produced after 2013)*	S&S E or G Carburetor	**170-0058**
T124 1999–'06 bt *(except '06 Dyna®) (Engines produced after 2013)*	Stock CV/EFI Delphi®	**170-0060**
T111 1999–'06 bt *(except '06 Dyna®) (Engines produced after 2013)*	S&S E or G Carburetor	**170-0058**
T111 1999–'06 bt *(except '06 Dyna®) (Engines produced after 2013)*	Stock CV/EFI Delphi®	**170-0060**

DISCLAIMER: NOT LEGAL FOR SALE OR USE IN CALIFORNIA ON ANY POLLUTION CONTROLLED MOTOR VEHICLE. NOT LEGAL FOR SALE OR USE NATIONWIDE ON ANY FEDERAL POLLUTION CONTROLLED MOTOR VEHICLE UNDER THE CLEAN AIR ACT

STEALTH AIR CLEANER KIT COVERS (ONLY)

NEW STEALTH TRIBUTE COVERS SEE PAGE 155


Carbon Fiber


Mini in Chrome


Mini in Gloss Black


Tri-Spoke


Torker


Air 1


Airstream in Chrome


Airstream in Gloss Black


Muscle in Chrome


Muscle in Gloss Black



111



124



143

STEALTH COVERS

Teardrop		Teardrop—Slasher		Carbon Fiber	Mini		Tri-Spoke	Torker	Air 1
Chrome	Gloss Black	Chrome	Gloss Black	Black	Chrome	Gloss Black	Gloss Black w/Highlights	Gloss Black w/Highlights	Gloss Black w/Highlights
170-0530	**170-0531**	**170-0532**	**170-0533**	**170-0501**	**170-0367**	**170-0366**	**170-0210**	**170-0206**	**170-0214**

Airstream		Muscle		Displacement		
Chrome	Gloss Black	Chrome	Gloss Black with Highlighted Logo	111	124	143
170-0118	**170-0396**	**170-0121**	**170-0463**	**170-0319**	**170-0321**	**170-0323**

⚠WARNING: Cancer and Reproductive Harm – www.P65Warnings.ca.gov

SINGLE BORE TUNED INDUCTION SYSTEM

FITMENT

- 1999–'06 stock CV carbureted big twins *(except 1999–'06 FXDWG/FXD35)*
- 2001–'06 Delphi® EFI big twins

FEATURES AND BENEFITS

- Bolt-on performance—–over twice the filtering area over stock intake system
- Increases horsepower and torque across the rpm range using air column inertia and carefully timed gas dynamic pressure waves
- Smooth intake tract of carefully selected tunted lengths increases performance
- High flow washable and reusable cotton media provides performance, protection, and economy
- Available in wrinkle black, chrome, or natural



CARB compliant EO #D-355-27

SINGLE BORE TUNED INDUCTION SYSTEM KITS

EXEMPT FROM EMISSIONS TAMPERING REGULATIONS UNDER CARB EO# D-355-27 FOR ALL FUEL INJECTED MODELS

Fitment	Fuel System	Finish	Part #
2001–'17 big twin *(except 2017 touring models, Throttle By Wire, & CVO® Models)*	Stock EFI Delphi®	Chrome/Red Filters	**170-0308B**

⚠WARNING: Cancer and Reproductive Harm – www.P65Warnings.ca.gov

SINGLE BORE TUNED INDUCTION SYSTEM KITS±

Fitment	Fuel Delivery	Finish	Part #
1999–'06 big twin models *(except 1999-'06 FXDWG/FXD35)* and S&S engines w/stock head breathing	S&S Single Bore EFI	Chrome Runner and Red Filters	**170-0085**
	S&S Super E/G		**170-0086**
1984–'06 Carbureted big twin models	Stock	Chrome Runner and Red Filters	**170-0087**
4⅛" bore S&S T-Series (S&S bolt pattern w/vaccum breathing)	S&S Single Bore EFI	Chrome Runner and Red Filters	**170-0083**
	S&S Super E/G		**170-0084**
CTO	Specify	Specify	**106-5337**

Use the Configure to Order (CTO) part number to order different finish and filter color.

*DISCLAIMER: NOT LEGAL FOR SALE OR USE IN CALIFORNIA ON ANY POLLUTION CONTROLLED MOTOR VEHICLE. NOT LEGAL FOR SALE OR USE NATIONWIDE ON ANY FEDERAL POLLUTION CONTROLLED MOTOR VEHICLE UNDER THE CLEAN AIR ACT

±⚠WARNING: Cancer and Reproductive Harm – www.P65Warnings.ca.gov

NOTES

Single bore tuned induction will not fit on motorcycles equipped with fairing lower glove boxes.

Fuel injection tuning is not required with this product but is highly recommended for best results.

REPLACEMENT PARTS: SEE PAGE 226

CLASSIC TEARDROP AIR CLEANER KIT



FEATURES AND BENEFITS

- Efficient and free flowing intake that can add two to five horsepower
- Uniquely designed backplate has air horn style radiused entryway to reduce turbulence
- Dimpled cover with directional air cone on inside creates smooth path for air
- Great addition to performance exhaust or cams

KIT CONTENTS

- Filter
- Backing plate and cover
- All mounting hardware
- Instructions

CARB compliant EO #D-355-27

CLASSIC TEARDROP AIR CLEANER KITS FOR STOCK EFI

EXEMPT FROM EMISSIONS TAMPERING REGULATIONS UNDER CARB EO# D-355-27 FOR ALL FUEL INJECTED MODELS

Fitment	Fuel System	Finish	Stock EFI, With 96 & 103 Engines
2001–'17 big twin *(except 2017 touring models, Throttle By Wire, & CVO® Models)*	Stock EFI Delphi®	Chrome	**170-0303B**±
		Gloss Black	**170-0304B**

±⚠WARNING: Cancer and Reproductive Harm – www.P65Warnings.ca.gov

CLASSIC TEARDROP AIR CLEANER KITS

Fitment	Finish	Stock Carb	S&S® Super E/G
S&S 4⅛" Bore engines with vaccum breathing	Slasher/Chrome	–	**17-0416**±
1993–'06 carbureted big twins *(& 2007–'10 Softail® CVO® Models)*	Chrome	**17-0450**±	**17-0403**±
	Gloss Black	**170-0181A**	–

DISCLAIMER: NOT LEGAL FOR SALE OR USE IN CALIFORNIA ON ANY POLLUTION CONTROLLED MOTOR VEHICLE. NOT LEGAL FOR SALE OR USE NATIONWIDE ON ANY FEDERAL POLLUTION CONTROLLED MOTOR VEHICLE UNDER THE CLEAN AIR ACT

±⚠WARNING: Cancer and Reproductive Harm – www.P65Warnings.ca.gov

CLASSIC TEARDROP AIR CLEANER KITS FOR S&S SINGLE BORE EFI THROTTLE BODIES±

Fitment	Style/Finish	52mm	58mm
Stock Harley-Davidson® heads or S&S Heads for stock or 4" bore head breathing	Teardrop/Chrome	**17-0498**	**106-4669**
S&S Heads for 4⅛" bore vaccum breathing	Teardrop/Chrome	–	**106-4668**

DISCLAIMER: NOT LEGAL FOR SALE OR USE IN CALIFORNIA ON ANY POLLUTION CONTROLLED MOTOR VEHICLE. NOT LEGAL FOR SALE OR USE NATIONWIDE ON ANY FEDERAL POLLUTION CONTROLLED MOTOR VEHICLE UNDER THE CLEAN AIR ACT

±⚠WARNING: Cancer and Reproductive Harm – www.P65Warnings.ca.gov



CLASSIC TEARDROP AIR CLEANER COVERS

Style	Finish	Part #
Classic Teardrop	Chrome	**17-0378**±
	Gloss Black	**170-0384A**
Slasher Teardrop	Chrome	**17-0004**±
	Gloss Black	**170-0419**
Nostalgic Teardrop	Polished	**17-0071**

±⚠WARNING: Cancer and Reproductive Harm – www.P65Warnings.ca.gov

REPLACEMENT PARTS STARTING ON PAGE 228

PRE-FILTERS

FITMENT
- S&S® Stealth Air Filters

FEATURES AND BENEFITS
- Water resistant
- Prevents large debris from prematurely clogging filter
- Washable Nylon
- Promotes longer filter life
- Reduces the risk of water entering air intake system



PRE-FILTERS

Application	Part #
Standard	**170-0193**
1" Tall	**170-0197**

HIGH FLOW AIR FILTER KITS

FITMENT
- S&S Classic Teardrop air cleaners for Super E & G carbs and S&S EFI throttle bodies

FEATURES AND BENEFITS
- Low restriction filter element comes pre-oiled for true plug and play installation
- 1" wider filtration area provides up to 37% more airflow over standard S&S filters
- Resulting band of exposed filter material imparts a high performance look

KIT CONTENTS
- Wide filter
- Filter spacers



170-0127



17-0045

HIGH FLOW AIR FILTERS

Description	Fitment	Part #
High Flow Air Filter Kit *(includes spacers)*	Classic Teardrop	**17-0045**
	Stealth	**170-0127 ***
1" Taller Filter Only	Classic Teardrop	**106-4724**
	Stealth	**170-0154**
Spacer	Classic Teardrop & Stealth, 1" Taller	**50-5009-S**

*DISCLAIMER: NOT LEGAL FOR SALE OR USE IN CALIFORNIA ON ANY POLLUTION CONTROLLED MOTOR VEHICLE. NOT LEGAL FOR SALE OR USE NATIONWIDE ON ANY FEDERAL POLLUTION CONTROLLED MOTOR VEHICLE UNDER THE CLEAN AIR ACT

STANDARD REPLACEMENT FILTERS

STANDARD REPLACEMENT AIR FILTERS

Description	Fitment	Part #
Standard Filter Only	Classic Teardrop	**106-4722**
	Stealth	**170-0126**

PERFORMANCE KIT OVERVIEW
FOR HARLEY-DAVIDSON® TWIN CAM 88®



4" BORE BOLT-IN SIDEWINDER® BIG BORE KIT

S&S 4" big bore cylinder and piston kits boost 88 and 96/103" Harley-Davidson® big twin engines to 100" and 110" respectively. These bolt-in kits don't require any machining, rebalancing or engine removal, and include just about everything you'll need to complete the installation. The biggest cylinder bore that can be installed in a stock crankcase without machining! SEE PAGE 163



124" HOT SET UP KIT

Move to the ultimate in performance packages! Increase your bore to 4⅛" and stroke to 4⅝" to realize a massive 124 cubic inches of pure performance. This kit includes flywheel assembly, cylinders and pistons, S&S Easy Start 640 lift chain drive camshafts, hydraulic lifters, pushrods, covers, valve springs and rocker arms. Comes complete with all gaskets and instructions. CTO options give you even more choices. Crankcases require boring to accept the larger cylinder spigots. SEE PAGE 164



106" STROKER KIT

Stroke it! This performance package gives big displacement. The kit's flywheel assembly increases your stroke from 4 ⅜" to a hefty 4 ½" and bumps your 88" to 106". Oversize your stock cylinder bore from 3 ¾" to 3 ⅞". No crankcase machining needed. Maintains stock engine height for easy installation. SEE PAGE 165



98 & 97" BIG BORE KIT

Up the displacement of your Twin Cam® 88 to a whopping 98". This bolt-on cylinder kit adds significant displacement without any machining required to your engine. Stroke stays the same at 4.00". Bore increases from 3.750 to 3.937". This kit contains pistons, cylinders and all related parts, gaskets and instructions. SEE PAGE 166



95" HOT SET UP KIT

Looking to go further? Consider the Hot Set Up Kits. These kits will put some stride in your glide. Pushrods, covers and hydraulic lifters are all included. Select from a variety of cylinder heads to achieve the compression ratio you desire or keep your stock heads. Kits include S&S Easy Start 570 or 585 chain drive camshafts. SEE PAGE 167

PERFORMANCE KIT SPECIFICATIONS FOR HARLEY-DAVIDSON® TWIN CAM 88®

KIT DESCRIPTION	BORE	STROKE	COMPRESSION RATIO								CAMSHAFT	HORSEPOWER	TORQUE
			Stock Heads	79cc	89cc	91cc	CNC Heads					(CNC Heads)	
							83cc	85cc	87cc	90cc			
124" Hot Set Up Kit	4 ⅛"	4 ⅝"	10.9:1	11.4:1*	11.1	10.8:1	11.6:1	11.4:1	11.2:1	10.9:1	640	127	130
106" Stroker Kit	3 ⅞"	4 ½"	10.1:1	10.7:1	9.7:1	9.6:1	10.3:1	10.1:1	9.9:1	9.7:1	585	109	115
98" Big Bore Kit	3.937"	4"	10.4:1	11.1:1	9.9:1	9.7:1	10.6:1	10.3:1	10.1:1	9.8:1	–		
97" Big Bore Kit	3.927"	4"	9.7:1	10.3:1	9.3:1	9.1:1	9.8:1	9.6:1	9.5:1	9.2:1	–	103	107
95" Hot Set Up Kit	3 ⅞"	4"	9.7:1	10.3:1	9.4:1	9.2:1	9.9:1	9.7:1	9.5:1	9.3:1	570	103	107

**Not Recommended*

PERFORMANCE KIT CONTENTS, OPTIONS AND REQUIREMENTS FOR HARLEY-DAVIDSON® TWIN CAM 88®

KIT DESCRIPTION	PACKAGE CONTENTS										MACHINING REQUIRED	CTO OPTIONS	REJETTING OR CALIBRATION CHANGE
	Flywheels	Cylinders	Pistons w/rings	Rocker Arms	Pushrods w/covers	Lifters	Cams	Valve Springs	Heads w/ springs	Gaskets			
124" Hot Set Up Kit	●	●	●	●	●	●	●		⓪	●	❸❹	❺❻❼	●
106" Stroker Kit	●		❶								❷		●
98" Big Bore Kit		●	●							●			●
97" Big Bore Kit		●	●							●			●
95" Hot Set Up Kit		⓪	⓪❶		●	●	●		⓪	●	❷	❺❻❼	●

⓪ = Optional
❶ = Order separately
❷ = Bore & hone cylinders
❸ = Crankcase machining for center stud
❹ = Crankcase machining for cylinder spigots
❺ = Camshaft selection
❻ = CNC heads
❼ = Combustion chamber size selection
❽ = Cylinder & piston set available

**The CTO option column lists only the major items offered. Virtually any option can be selected from our product offerings through the Configure To Order (CTO) program.*

4" BORE BOLT-IN SIDEWINDER® BIG BORE KITS



S&S 4" big bore cylinder and piston kits boost 88" Harley-Davidson® big twin engines to 100". These bolt-in kits don't require any machining, rebalancing or engine removal, and include just about everything you'll need to complete the installation. The biggest cylinder bore that can be installed in a stock crankcase without machining!

FEATURES & BENEFITS

- Bolts in. No machining, balancing, or splitting the crankcases
- 88 engines end up at 100"
- Complete kits include cylinders, pistons, gaskets, and instructions
- Choose from wrinkle black or silver powder coat cylinders – *matches stock finish*

FITMENT

- 1999–2006 big twins

SPECS FOR S&S 4" BORE BOLT-IN CYLINDER & PISTON KITS

Year	Stroke	Bore	Cylinder Length	Piston Type	Dome Volume	Compression Ratio		
						83cc CNC Heads	85cc Stock Heads	89cc S&S Heads
1999–2006	4"	4.00"	4.937"	Forged	8.75 pop up	10.8:1	10.5:1	10.1:1

Sidewinder®

4" BORE BOLT-IN SIDEWINDER® BIG BORE KITS

Displacement	Year	Stroke	Finish	Part #
100	1999–2006 big twin	4"	Silver	**910-0642**
	1999–2006 big twin	4[4]	Wrinkle Black	**910-0646**

DISCLAIMER: NOT LEGAL FOR SALE OR USE IN CALIFORNIA ON ANY POLLUTION CONTROLLED MOTOR VEHICLE. NOT LEGAL FOR SALE OR USE NATIONWIDE ON ANY FEDERAL POLLUTION CONTROLLED MOTOR VEHICLE UNDER THE CLEAN AIR ACT

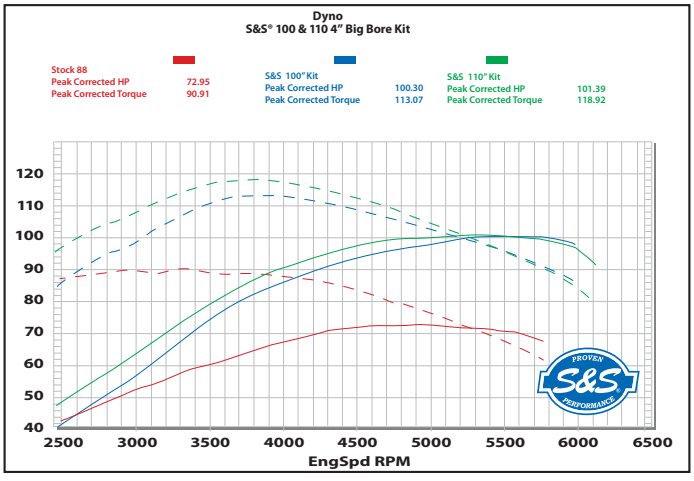

These dyno results from our DynoJet® 250i chassis dynamometer clearly show the performance increases available with the S&S bolt-in 4 inch bore kits. The lowest (red) set of curves represents a stock 88 cid engine in a 2004 Harley-Davidson® FLHR Road King®. The next curves above the stock baseline (blue) shows the performance of the S&S 100" bolt-in big bore kit. The highest set of curves show the results from an S&S 110" big bore kit installed in a 96 cid engine. The engines with the S&S 100" and 110" kits were also set up with S&S 585 cams, Power Tune® headers, Mk45 muffler, and the stock EFI throttle body with an S&S Stealth air cleaner.

NOTES

Not for use with S&S 79cc Cylinder Heads.

Not for use on trike models.

124" HOT SET UP KIT®

Now with Easy Start Gear Drive Cams!

S&S GEAR DRIVE

FITMENT

- All big twin models

FEATURES AND BENEFITS

- Huge displacement increase means huge power increase
- Stock crankcases, cylinder heads, oil pump, and cam cover can be reused, saving hundreds of dollars
- Original engine serial numbers are retained
- Gear drive S&S 640 Easy Start Cams included!
- Wrinkle black powder coat finish heads match factory finish, giving bike a "sleeper" advantage
- .045" MLS (multi-layered steel) head gaskets
- Adds .096" to engine height
- Kits with S&S heads use stock length manifolds (S&S size 410)

OPTIONS

- Silver finish available through CTO

S&S® 124" HOT SET UP KIT® SPECIFICATIONS

Year	Stroke	Displacement	Bore	Cylinder Length	PISTON TYPE/COMPRESSION RATIO		
					91cc S&S Heads	89cc S&S Heads	85cc Stock Heads
1999–'06	4 5⁄8"	124"	4 1⁄8"	5.013"	Flat top forged/10.8:1	Flat top forged/11:1	Forged, 10.9cc dish/10.4:1

Cylinder w/piston kits include fitted pistons and cylinders that require no boring or honing.



900-0565

124" HOT SET UP KITS® FOR HARLEY-DAVIDSON® TWIN CAM 88®/88B™ ENGINES

(Kits include S&S® Super Stock® 91cc Cylinder Heads) (10.8:1 Compression)

Model or Engine Type	Finish	Part #
1999–2006 Twin Cam 88 touring and Dyna® (except 2006 Dyna® models)*	Wrinkle Black	**900-0564**
2000–2006 Twin Cam 88B Softail® w/Balancer	Wrinkle Black	**900-0565**
CTO Other Finishes and Combinations Available Here	Specify	**106-5752**

DISCLAIMER: NOT LEGAL FOR SALE OR USE IN CALIFORNIA ON ANY POLLUTION CONTROLLED MOTOR VEHICLE. NOT LEGAL FOR SALE OR USE NATION-WIDE ON ANY FEDERAL POLLUTION CONTROLLED MOTOR VEHICLE UNDER THE CLEAN AIR ACT

**For 2006 Dyna® 124" Kits, see Section 2.*

NOTES

Requires recalibration.

S&S Easy Start Cams save you money—no need to buy compression releases or S&S rocker covers. Note when using 1999–'06 chain drive cams: For lifts over .510", S&S strongly recommends that the stock chain drive be upgraded to the S&S gear drive or S&S TC3 oil pump and cam plate. This kit updates the problematic spring loaded chain tensioners to more reliable hydraulic tensioners and also upgrades the oil pump.

Main Bearing Note: S&S flywheel assemblies included in a 124" S&S Hot Set Up Kit® for 1999–'15 big twin engines are designed for use with Timken® sprocket shaft bearings. They will fit directly in stock 1999–'02 Harley-Davidson® crankcases and in all S&S crankcases for 1999–'15 big twin engines, with no modifications. However, stock 2003 and later engines use a roller type bearing for the sprocket shaft, and will require modification.

Due to the amount of power these engines produce with an S&S Hot Set Up Kit, S&S strongly recommends retrofitting 2003–'15 model crankcases to accept a Timken sprocket shaft bearing. A Timken conversion sleeve such as Screamin' Eagle® #34822-08 or Jim's® #956 may be used. A charging system spacer for 1999–'02 model year is also required.

This kit will require that the case be bored to accept the larger cylinders.

If you choose not to convert your crankcases to a Timken sprocket shaft bearing, S&S flywheels may be used in 2003 and later engines with the installation of the Harley-Davidson® bearing kit #24004-03B. This bearing kit adapts the S&S sprocket shaft to be compatible with stock roller type bearings. Verify that the bearing kit contains the 24604-00D or 24607-07 sprocket shaft bearing. Do not use a 24604-00, 24604-00A, 24604-00B or 24604-00C bearing. Please be advised that if this type of bearing is used, sprocket shaft bearing failure WILL NOT be covered under warranty.

Kits with S&S heads are machined special to compensate for engine height change to accomodate a stock length manifold. When using a kit with stock cylinder heads, S&S recommends using the appropriate length manifold. For a 124" with stock OEM cylinder heads, the standard manifold length is 417.

Center case bolt between cylinders will use waisted bolt kit 900-0807

106" STROKER KITS
FOR USE WITH STOCK CYLINDERS



320-0460

FITMENT
- 1999–'06 big twins

FEATURES AND BENEFITS
- Installation of the kit does not require any special machining, other than fitting the pistons
- S&S stroker pistons, which are sold separately, are available in all standard oversizes
- Stock 88" cylinders can be bored from 3¾" bore to 3⅞" to accommodate the S&S pistons, or a pre-fit S&S cylinder and piston kit may be installed
- Engines with factory 95" kits require piston fitting only—stock or S&S cylinder heads can be used
- Fuel injected engines will require recalibration of the fuel injection system—the S&S VFI modules and closed loop sensor kits are highly recommended
- Piston jets (p/n 31-2026) included
- Maintains stock engine height

S&S® 106" STOCK BORE STROKER KITS FOR HARLEY-DAVIDSON® TWIN CAM 88® AND TWIN CAM 88B™ ENGINES SPECIFICATION CHART

Displacement	Stroke	Bore	Compression Ratio*	Piston Type	Piston Deck Height	Cylinder Length
106"	4½"	3⅞"	10.1:1	Flat Top	1.020"	4.937"

**Compression ratio with stock heads. Compression ratio with S&S 89cc heads 9.8:1. For additional compression use .030" MLS head gaskets- part #900-0605*
Includes S&S piston oiling jets

106" STROKER KITS FOR HARLEY-DAVIDSON® TWIN CAM 88® ENGINES WITH STOCK CYLINDERS

Engine Displacement	Stroke	Sprocket Bearing Race	1999–2006 HD® big twin models *(except 2006 Dyna® models)*		2006 HD® Dyna® models
			TC 88®	TC 88B™	
S&S 106 Stroker	4 ½"	Yes	**320-0459**	**320-0453**	**320-0449**
		No	**320-0460**	**320-0454**	**320-0450**
Special Order	Specify	Specify	**329-0002**	**329-0002**	**329-0002**

Note - All S&S flywheel assemblies for 1999-'06 engines have connecting rods with 7.667" length and full width straight wristpin ends.

THESE KITS REQUIRE SPECIAL S&S PISTONS: Order the required 92-1210 Series pistons. See chart.

92-1210 SERIES PISTONS FOR S&S® 106" STROKER KIT				CYLINDER & PISTON KIT*	
Standard	+.005"	+.010"	+.020"	Silver	Black
92-1210	**92-1214**	**92-1211**	**92-1212**	**910-0199**	**910-0203**

*Piston Deck Height 1.020" *Cylinder w/piston kits include fitted pistons and cylinders that require no boring or honing.*



98" BIG BORE KITS

FITMENT
- 1999–2006 big twin

FEATURES AND BENEFITS
- 3.937" bore
- Cylinder and piston kits make going to larger bore sizes easy—*no machining required*
- Stock engine height is maintained
- 11 fin cylinder design closely resembles OEM shape and come prefinished—*ready to install*
- Increased fin area for better heat dissipation
- Centrifugal cast, gray iron liner features 40,000 psi tensile strength—*superior wear and performance*
- CP Pistons are recognized as industry leaders, and provide exceptional wear, performance and noise characteristics

KIT CONTENTS
- S&S cylinders with gaskets
- Piston set with rings, wristpins and wristpin clips

S&S® 98" BIG BORE KIT SPECIFICATION CHART

Displacement	Stroke	Bore	Cylinder Length	Forged Piston Type	COMPRESSION RATIO (with provided .045" head gasket)		
					83cc CNC Ported Stock Heads	85cc Stock Heads	89cc S&S Heads
98"	4"	3.937"	4.937"	10cc Dome	10.6:1	10.4:1	9.9:1

Cylinder w/piston kits include pistons and cylinders that require no boring or honing.


910-0481

98" BIG BORE KITS

Cylinder Finish	Part #
Silver powder coat	**910-0482**
Wrinkle Black powder coat	**910-0481**

DISCLAIMER: NOT LEGAL FOR SALE OR USE IN CALIFORNIA ON ANY POLLUTION CONTROLLED MOTOR VEHICLE. NOT LEGAL FOR SALE OR USE NATIONWIDE ON ANY FEDERAL POLLUTION CONTROLLED MOTOR VEHICLE UNDER THE CLEAN AIR ACT

NOTES

Not for use with S&S 79cc Cylinder Heads

97" BIG BORE KITS

FITMENT
- 1999–'06 big twins

FEATURES AND BENEFITS
- No case machining required
- Bolt-on 9 to 10 cubic inches—cylinders do not require crankcase machining to install
- Piston weight for 97" kits are the same as stock, requiring no flywheel rebalancing
- Forged coated pistons are compatible with stock or S&S Super Stock® 79cc & 89cc heads
- Valve pocket recessed in S&S pistons are enlarged for oversize valves and higher lift cams
- Maintains stock engine height
- 11 fins and full fin pattern on cam side closely resembles OEM shape

OPTIONS
- Oversize pistons available — see page 178

KIT CONTENTS
- S&S cylinders with gaskets
- Piston set with rings

S&S® 97" BIG BORE KITS SPECIFICATION CHART

Displacement	Stroke	Bore	Cylinder Length	Forged Piston Type	Compression Ratio			
					79cc S&S Heads	83cc CNC Ported Stock Heads	85cc Stock Heads	89cc S&S Heads
97"	4"	3.927"	4.937"	3cc Dome	10.3:1	9.9:1	9.7:1	9.3:1

Cylinder w/piston kits include fitted pistons and cylinders that require no boring or honing.


910-0205

97" BIG BORE KITS

Cylinder Finish	Part #
Silver powder coat	**910-0201**
Wrinkle Black powder coat	**910-0205**

DISCLAIMER: NOT LEGAL FOR SALE OR USE IN CALIFORNIA ON ANY POLLUTION CONTROLLED MOTOR VEHICLE. NOT LEGAL FOR SALE OR USE NATIONWIDE ON ANY FEDERAL POLLUTION CONTROLLED MOTOR VEHICLE UNDER THE CLEAN AIR ACT

NOTES

S&S® highly recommends installing a performance cam for easier starting and better engine performance.

S&S high flow cylinder heads will provide further horsepower gains.

For an additional .2 bump in compression, order .030" thick head gaskets #900-0605 (2 pack). Remember to check your clearances.

These kits require tuning.

95" HOT SET UP KITS



FITMENT

- 1999–'06 big twins

FEATURES AND BENEFITS

- .045" MLS head gaskets standard
- Up to a 40 HP increase
- True bolt on kit, no machining required
- Maintains stock engine height
- Kits include S&S 570 or 585 Easy Start chain drive cams—depending on resultant compression ratio
- S&S pushrods are made of high strength chrome-moly tubing
- Valve pocket recesses in S&S pistons are enlarged for oversize valves and high lift cams

S&S® 95" HOT SET UP KIT® SPECIFICATIONS

Displacement	Stock Stroke	Bore	Cylinder Length	Forged Piston Type	Compression Ratio			
					79cc S&S Heads	83cc CNC Ported Stock Heads	85cc Stock Heads	89cc S&S Heads
95"	4"	3⅞"	4.937"	5.3cc pop-up dome	10.4:1	9.9:1	9.7:1	9.4:1

Cylinder w/piston kits include fitted pistons and cylinders that require no boring or honing.

95" SUPER STOCK® HOT SET UP KITS® FOR 88" ENGINES

Includes S&S 3⅞" bore cylinders and pistons, 585 gear drive cams and 79cc heads

Application	Wrinkle Black
1999–'06 *(except 2006 Dyna® Models*)*	**106-0214**±

DISCLAIMER: NOT LEGAL FOR SALE OR USE IN CALIFORNIA ON ANY POLLUTION CONTROLLED MOTOR VEHICLE. NOT LEGAL FOR SALE OR USE NATIONWIDE ON ANY FEDERAL POLLUTION CONTROLLED MOTOR VEHICLE UNDER THE CLEAN AIR ACT

± ⚠ WARNING: Cancer and Reproductive Harm – www.P65Warnings.ca.gov

NOTES

Fuel injected engines will require recalibration of the fuel injection system. The S&S VFI modules and closed loop sensor kits are highly recommended.

Stock cylinders must either be bored to 3⅞" or replaced with S&S® 3⅞" bore cylinders.

S&S recommends either CNC porting stock cylinder heads or purchasing Super Stock® heads to maximize the effect of higher lift cams. Stock cylinder heads will produce significantly less power. S&S can CNC port your heads, for an economical increase in power.

For 95" kits ordered without cylinders, pistons must be measured and cylinders bored/honed accordingly. Recommended piston fitment:

Close: 0.0020" – 0.0025" Loose: 0.0032" – 0.0045"

92-1200 series pistons have a 1.270" deck height.

.030" MLS head gaskets optional: Part #900-0606

S&S Easy Start Cams can save you money—no need to buy compression releases or S&S rocker covers. Note when using 1999–'06 chain drive cams: For lifts over .510", S&S strongly recommends that the stock chain drive be upgraded to the S&S gear drive or S&S TC3 oil pump and cam plate. This kit updates the problematic spring loaded chain tensioners to more reliable hydraulic tensioners and also upgrades the oil pump.

ENGINE OVERVIEW

S&S performance engines for 1999–'06 Harley-Davidson® big twins are available as long blocks which do not include fuel or ignition systems. Emissions compliant engines are complete. Engines are protected by super tough powder coat finishes. Available in silver and chrome, wrinkle black and chrome, Stone Grey and chrome, and Black Edition color schemes. Stone Grey matches the engine finish on CVO models. Black Edition is a wrinkle black engine with gloss black covers.

BLACK EDITION

S&S Cycle's new Black Edition engines combine classic wrinkle black with high gloss black powder coated covers for a subtle contrast and elegant look while still producing the power and reliability you've come to expect.

T143 (143 cid)

Now available for 1999-2006 chassis, the T143 long block engine is the largest (143 cid) S&S engine that will fit in a stock chassis. Available in silver, wrinkle black, or black edition finishes. Long blocks come without fuel or ignition systems (available separately) and an oil line installation kit is required. The 160 rear wheel horsepower also requires performance drive train upgrades. Not for the faint of heart!

T124 (124 cid)

The S&S T124 long block engine has been our daily rider hot rod since 2004. The combination of day in and day out reliability and brutal power make it the perfect choice. Available in silver, wrinkle black, or black edition finishes. Long blocks come without fuel or ignition systems (available separately) and an oil line installation kit is required. Our Super G carburetors and Throttle Hog EFI throttle bodies are highly recommended.

T111 (111 cid)

The S&S T111 long block is the ultimate sport touring engine. The shorter stroke provides a perfect combination of performance, engine life, quiet operation, and reduced vibration. Available in silver, wrinkle black, or black edition finishes. Long blocks come without fuel or ignition systems (available separately) and an oil line installation kit is required. Our Super E and G carburetors and Throttle Hog EFI throttle bodies are available to complete the package.



T143 ENGINES

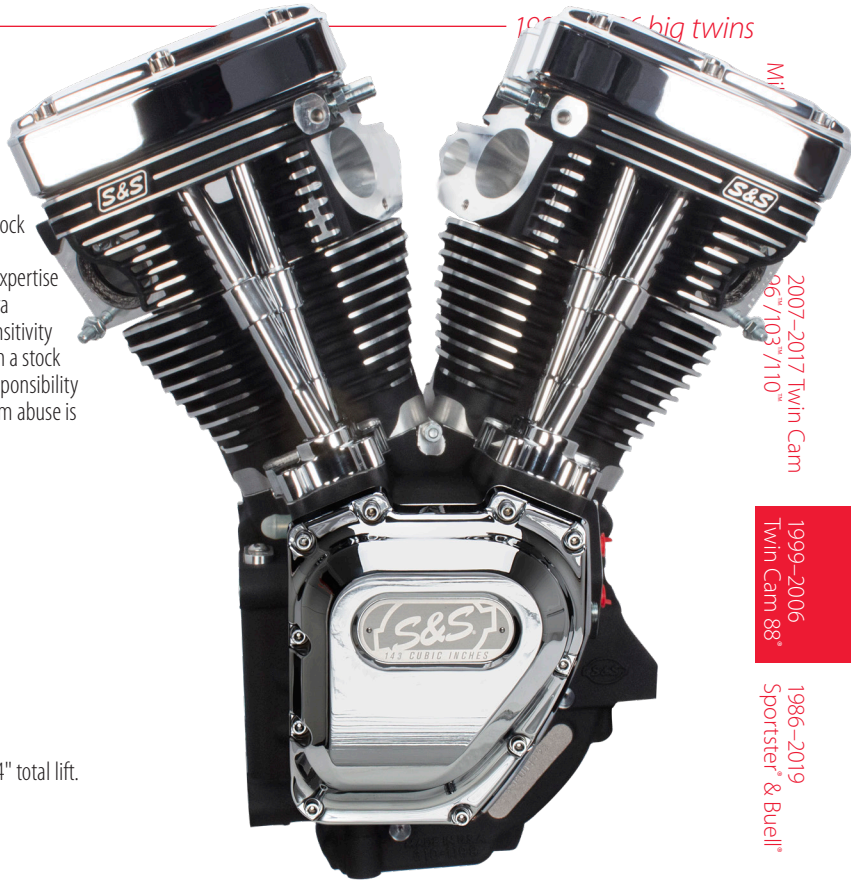

The *BIGGEST, BADDEST, BOLT-IN* for a Stock Frame.

The S&S T143 Long Block engine is the largest S&S engine that will fit in a stock Harley-Davidson® chassis.
At double the HP of a stock motor the power of the T143 requires technical expertise for the installation and tuning along with an experienced rider. This is an ultra performance/race engine. Longevity, engine noise, vibration and throttle sensitivity have all been compromised to reach this level of performance while fitting in a stock chassis and as such is not suitable for every situation. It is the purchaser's responsibility to consider the suitability for their application. Engine noise and damage from abuse is not covered under warranty.

FITMENT

- 1999–2006 Harley-Davidson® touring models
- 1999–2005 Harley-Davidson® Dyna® models

FEATURES AND BENEFITS

- Fits in stock chassis – no cutting or frame modifications
- S&S B3 cylinder heads CNC machined with 2 bolt exhaust flanges
- 3 Piece Flywheels
- TC3 Oil Pump and Cam Plate
- S&S 635 Easy Start Gear Drive Cams and S&S 1.725:1 rocker arms for .674" total lift.
- S&S Precision Tappets

SUGGESTED ACCESSORIES

- Stealth Air Cleaner Kit 143 Cover
  See page 158



110-0120



110-0119



170-0288

T143 ENGINES WITHOUT FUEL AND IGNITION SYSTEMS

Chassis Style	Displacement	Bore	Stroke	Cam	Piston Type	Compression Ratio	Warranty Period	Finish	Part #
1999–'06 touring models 1999–'05 Dyna® models	143"	4.425"	4.625"	635	S&S Forged Flat Top	10.47:1	1 year	Wrinkle Black	**310-0737A**
								Silver	**310-0738A**
1999–2006 bt *(except '06 Dyna®)*								Black Edition	**310-0833A**

DISCLAIMER: FOR CLOSED COURSE COMPETITION USE ONLY. NOT INTENDED FOR STREET USE. LEGAL IN CALIFORNIA ONLY FOR RACING VEHICLES WHICH MAY NEVER BE USED, OR REGISTERED OR LICENSED FOR USE, UPON A HIGHWAY. NOT LEGAL FOR SALE OR USE NATIONWIDE ON ANY FEDERAL POLLUTION CONTROLLED MOTOR VEHICLE UNDER THE CLEAN AIR ACT.

OIL LINE INSTALLATION KIT. See chart.

INSTALLATION PARTS

Description		Part #
Oil Line Kit	Touring models	**31-0425**
	Dyna® models	**31-0424**
Super G Carburetor Kit w/air cleaner*		**110-0120**
Super D Carburetor Kit w/air cleaner*		**110-0119**

**Air cleaner assemblies included with these carburetor kits do not include air cleaner covers. Stock 1999-later air cleaner or any S&S Stealth air cleaner covers may be used.*

Description		Part #
70mm Induction Kit	2002–'05 Dyna® & touring models	**170-0289**
	2006–'07 touring models	**170-0288**

NOTES

T-Series engines are not compatible with HD® Softail® models.
No fuel system available for 1999–2001 Magnetti Morelli EFI models

T-SERIES LONG BLOCK ENGINES
FOR 1999–'06 HARLEY-DAVIDSON® BIG TWINS EXCEPT 2006 DYNA® MODELS

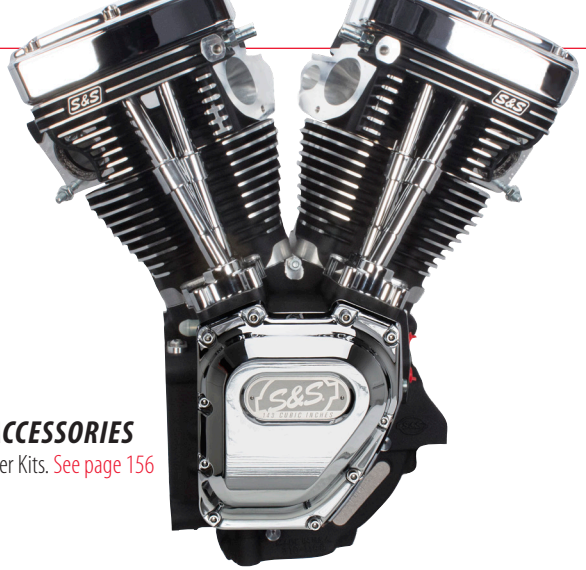

FEATURES
- No fuel system or ignition systems included — Use what you already have
- Special Head machining — Fits stock length intake manifolds (S&S manifold size 410)
- Stock style breathing system — stock breather spacing and function is compatible with stock and most performance air cleaners
- Same quality components and performance as our complete T-Series engines
  - New S&S cylinders that look more like stock
  - Super Stock heads and crankcases
  - TC3 Oil Pump and Cam Plate
  - S&S Easy Start cams

SUGGESTED ACCESSORIES
- Stealth Air Cleaner Kits. See page 156

OPTIONS
- T111 — 111 cubic inches, perfect sport-touring engine
- T124 — 124 cubic inches, hot-rod performance, 640 Easy Start Cams
- T124LC — 124cubic inches with slightly lower compression, 585 Easy Start Cams

NOTES

T-Series engines are not compatible with HD® Softail® models.

No fuel system available for 1999–2001 Magnetti Morelli EFI models

T124 ENGINES WITHOUT FUEL AND IGNITION SYSTEMS

Chassis Style	Displacement	Bore	Stroke	Cam	Piston Type	Compression Ratio	Warranty Period	Finish	Part #
1999–'06 bt *(except '06 Dyna®)*	124"	4⅛"	4⅝"	640	S&S Forged Flat Top	10.8:1	2 Years	Silver	**310-0281A**
								Wrinkle Black	**310-0282A**
								Black Edition	**310-0831A**
	124"	4⅛"	4⅝"	585	S&S Forged Dished	10.2:1	2 Years	Silver	**310-0327A**
								Wrinkle Black	**310-0326A**
								Black Edition	**310-0832A**
CTO				Specify		Specify	Varies	Specify	**319-0010**

T111 ENGINES WITHOUT FUEL AND IGNITION SYSTEMS

Chassis Style	Displacement	Bore	Stroke	Cam	Piston Type	Compression Ratio	Warranty Period	Finish	Part #
1999–'06 bt, *(except '06 Dyna®)*	111"	4⅛"	4⅛"	585	S&S Forged	9.8:1	2 Years	Silver	**310-0279A**
								Wrinkle Black	**310-0770A**
								Black Edition	**310-0830A**
CTO				Specify		Specify	Varies	Specify	**319-0010**

OIL LINE INSTALLATION KIT. See chart.

31-0424



OIL LINE INSTALLATION KIT

Fitment	Part #
1999–'06 FLT Models	**31-0425**
1995–'05 Dyna® Models	**31-0424**

COMPLETE ENGINE REBUILD GASKET KITS

S&S Engine Family	Year Group	Bore Size	Part #
T-Series	1999–'06	4⅛"	**310-0335**

NOTES

ENGINE MANAGEMENT AND FUEL SYSTEMS

Cylinder heads on T-Series long block engines are 1999–'05 style. Owners of 2006 models will need to purchase a set of 1999–'05 style, offset intake flanges such as S&S #106-3516.

Cylinder heads on these engines are specially machined to compensate for the non-stock cylinder length. As a result, they are compatible with manifolds and throttle bodies with stock length intake runners. In addition, the breather vent bolt locations have been adjusted so they are in the stock location, so stock style air cleaner Backplates will bolt up to these engines.

2002–'06 EFI engines equipped with Delphi® fuel injection will require a performance tuner such as the Harley-Davidson® Race Tuner. The stock single bore throttle body can not supply adequate air for these large displacement engines. An S&S 58mm throttle body is highly recommended for maximum performance.

Carbureted engines will require a performance ignition module that allows adjustments to the advance curves. The stock ignition module is not adjustable, and use of the stock module will likely result in engine damage due to knock from incorrect ignition timing.

Performance carburetors are recommended to achieve maximum performance. S&S Super E carbs are ideal for T111 engines in touring applications, but a Super G will produce more top end horsepower. S&S Super G carbs are recommended for T111 engines in performance applications, and for T124 engines in all applications.

The Oil Line Installation Kits are not required for the updated S&S T-series engines. If the part number of the engine ends in "A," it DOES NOT need an installation kit.

DISCLAIMER: FOR CLOSED COURSE COMPETITION USE ONLY. NOT INTENDED FOR STREET USE. LEGAL IN CALIFORNIA ONLY FOR RACING VEHICLES WHICH MAY NEVER BE USED, OR REGISTERED OR LICENSED FOR USE, UPON A HIGHWAY. NOT LEGAL FOR SALE OR USE NATIONWIDE ON ANY FEDERAL POLLUTION CONTROLLED MOTOR VEHICLE UNDER THE CLEAN AIR ACT.

CRANKCASES

FITMENT

- 1999–'06 Harley-Davidson® Twin Cam 88® A Engines *(except 2006 Dyna®)*

FEATURES AND BENEFITS

- Much stronger than stock crankcases in every aspect, extra large front motor mount for increased strength
- Large cam chest allows cam lift up to .675" without clearancing
- Timken® style sprocket shaft bearings withstand the most demanding applications
- Includes S&S crankcase breather reed valve to eliminate oil carry-over and oil scavenging problems
- Clearanced for strokes up to 5"
- All passages between the crankcase and the cam support plate are o-ring sealed
- Includes pinion and Timken® bearing

OPTIONS

- Available in stock bore, 4" bore, and 4⅛" bore versions

S&S exclusive FLUID LINE CONNECTOR (U.S. PATENT PENDING)

KIT CONTENTS

- S&S crankcase
- S&S breather reed valve
- Bearings and hardware

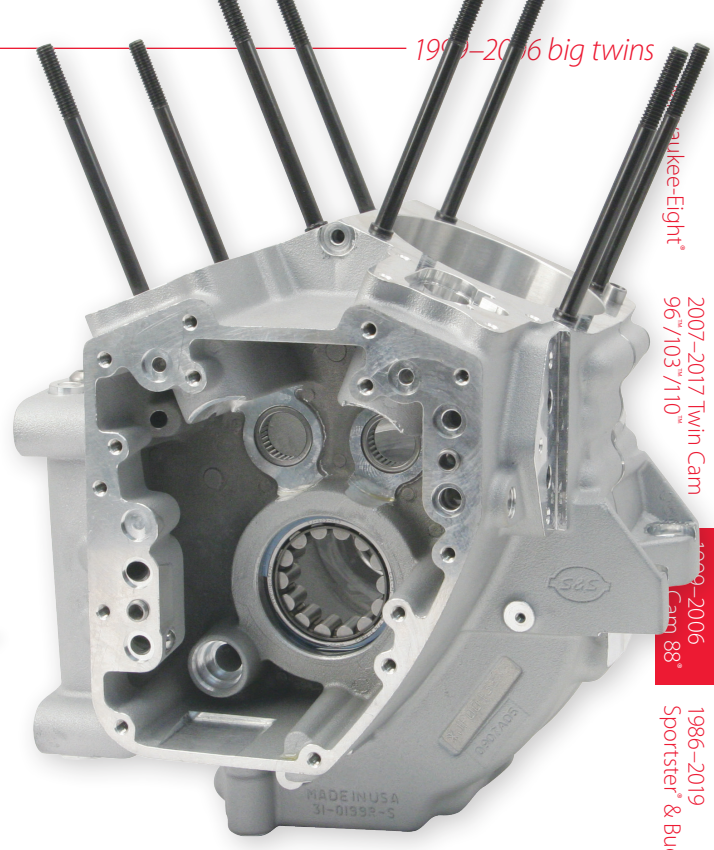

CRANKCASE FOR 1999–'06 BIG TWIN ENGINES *(EXCEPT 2006 DYNA® MODELS)*

Crankcase Bore Size	Silver	Wrinkle Black	Polished
Stock Bore (Stock Stud Pattern)	**106-4039A**	**31-0172A**	–
4⅛" Bore (Stock Stud Pattern)	**106-4057A**	**31-0181A**	–
4⅛" Bore (S&S Stud Pattern)	**106-4043A**	**31-0178A**	**31-0179A**
4.425" Bore (S&S® T143)	—	**310-0721A**	

DISCLAIMER: NOT LEGAL FOR SALE OR USE IN CALIFORNIA ON ANY POLLUTION CONTROLLED MOTOR VEHICLE. NOT LEGAL FOR SALE OR USE NATIONWIDE ON ANY FEDERAL POLLUTION CONTROLLED MOTOR VEHICLE UNDER THE CLEAN AIR ACT

31-0424



OIL LINE INSTALLATION KIT

Fitment	Part #
1999–'06 FLT Models	**31-0425**
1999–'05 Dyna® Models	**31-0424**

REPLACEMENT PARTS: SEE PAGE 212

NOTES

Oil line installation kit part #31-0424 is required for installation in 1999–'05 Dyna® models. This kit includes a special transmission top cover and oil lines.

Oil line installation kit part #31-0425 is required for installation in 2000–'06 FLT models. Stock transmission top cover may be used.

The Oil line installation kits are not required for the updated S&S T-series engines. If the part number of the engine ends in "A," it does not need an installation kit.

CRANKCASE BREATHER REED VALVES

FITMENT

- Twin Cam 88®/96™ *(except "B" engines)*
- S&S T-Series engines

FEATURES AND BENEFITS

- Improved oil scavenging and reduced oil carryover



31-2070

CRANKCASE BREATHER REED VALVES

Oil Pump Fitment	Year Application	Part #
For Engines with Stock or S&S TC3 Oil Pump	1999–'02	**31-2070**
	2003–'10	**310-0742**
	S&S special application crankcases*	**310-0742**
For Engines with S&S gear oil pump	2003–'10 stock crankcases & 1999–'06 S&S crankcases	**310-0742**

**Spring adaptor required to accommodate the extra .375" case width of S&S Special Application big bore crankcases.*

SPRING ADAPTER AND SPACER

Fitment	Part #
Spacer (for S&S SA crankcases)*	**31-2103**



**Required to accommodate the extra .375" case width of S&S Special Application big bore crankcases.*

REPLACEMENT PARTS: SEE PAGE 238

NOTES

The crankcases breather valve for Twin Cam 88® engines was designed and developed for use with stock Harley-Davidson® or S&S gear oil pumps and tappets, and may not be compatible with some aftermarket components.

Not available for Twin Cam 88B™ or Twin Cam 96B™ engines with internal balancers.

Does not fit with Screamin' Eagle® oil pumps.

3 PIECE FLYWHEEL ASSEMBLIES

FITMENT

- 1999–'06 Harley-Davidson® big twins—Balanced and unbalanced models
- S&S T-Series Engine and Hot Set Up Kit® replacement flywheels

S&S exclusive 3 PIECE FLYWHEEL US PATENT PENDING

FEATURES AND BENEFITS

- Heat-treated 4140 material is harder and 114% stronger than stock
- Harder material, no thrust washers required—*Where stock flywheels have thrust washers, S&S flywheels have steel gripping the crankpin*
- Larger 1.671" diameter crankpin—*increased contact area and tighter press fit for a stronger joint. No welding required!*
- Integral mainshafts —*eliminates two potential points of weakness*
- Consistent balance and precision machining—*Truer flywheels and less vibration*
- Reduced mainshaft deflection at high rpm—*less vibration, reduced piston and rod side thrusting, prevents oil pump damage, fully compatible with gear drive cams*
- Capable of higher rpm—*More available power!*



320-0460

FLYWHEEL ASSEMBLIES

Engine Displacement	Stroke	Sprocket Bearing Race	1999–2006 HD® big twin models (except 2006 Dyna® models)			2006 HD® Dyna® models	
			Total Piston Weight	TC 88®	TC 88B™	Total Piston Weight	Part #
88, 95, 97, 100 w/ Stock or S&S® Pistons	4"	Yes*	1230	**320-0402** USA	**320-0396** USA	1230	**320-0392** USA
		No	1230	**320-0403** USA	**320-0397** USA	1230	**320-0393** USA
96, 103,CVO 103, 106 big bore, 110, 117 w/ Stock or S&S® Pistons	4⅜"	Yes*	1035	**320-0360**	**320-0354**	1035	**320-0350**
		No	1035	**320-0361**	**320-0355**	1035	**320-0351**
S&S® 106 Stroker**	4½"	No	1108	**320-0460**	**320-0454**	1108	**320-0450**
S&S® 111	4⅛"	No	1035	**320-0417**	–	1035	**320-0407**
SE 120R (uses 7.575" length rods)†	4⅝"	No	1035	**320-0525**	**320-0527**	1035	**320-0523**
S&S® 124	4⅝"	No	1035	**320-0475**	**320-0469**	1035	**320-0464**
S&S® T143	4⅝"	No	1290	**320-0552**	–	–	–
Special Order	Specify	Specify	Specify	**329-0002**	**329-0002**	Specify	**329-0002**

Note: All S&S flywheel assemblies for 1999–'06 engines have connecting rods with 7.667" length and full width straight wristpin ends.

**Flywheel assemblies supplied with sprocket shaft bearing race installed are compatible with stock roller style sprocket shaft bearings. Assemblies with no race require a Timken® sprocket shaft bearing.*

***4½" stroke flywheels for 2006 Dyna® include 7.667" long connecting rods.*

NOTES

†These flywheels are replacement flywheels for the SE 120R. When installing these flywheels in a Harley-Davidson® case, they need to run the HD piston oiling jets—*not the S&S® piston oiling jets.*

Engines with strokes over 4" may require S&S® piston oiling jets (p/n 31-2026) and piston to jet clearance notches in the piston skirt to avoid contact.

Main Bearing Note: Most S&S flywheel assemblies for 1999–'16 big twin engines are designed for use with Timken® sprocket shaft bearings. They will fit directly in stock 1999–'02 Harley-Davidson® crankcases and in all S&S crankcases for 1999–'15 big twin engines, with no modifications. However, stock 2003 and later engines use a roller type bearing for the sprocket shaft. S&S does offer flywheel assemblies that are compatible with late roller style stock sprocket shaft bearings, but they are not recommended for very large, high performance engines.

S&S strongly recommends retrofitting 2003–'16 model crankcases to accept a Timken sprocket shaft bearing. A Timken conversion sleeve such as Screamin' Eagle® #34822-08 or Jim's® #956 may be used. A charging system spacer for 1999–'02 model year is also required.

If you choose not to convert your crankcases to a Timken sprocket shaft bearing, S&S flywheels may be used in 2003 and later engines by either purchasing the stock compatible flywheels or by installing Harley-Davidson® bearing kit #24004-03B when using S&S flywheels designed for Timken bearings. This bearing kit adapts the S&S sprocket shaft so it is compatible with stock roller type bearings. Verify that the bearing kit contains the 24604-00D or 24607-07 sprocket shaft bearing. Do not use a 24604-00, 24604-00A, 24604-00B or 24604-00C bearing. Please be advised that if this type of bearing is used, sprocket shaft bearing failure WILL NOT be covered under warranty.

REPLACEMENT PARTS: SEE PAGE 214

TRYING TO IDENTIFY AN S&S® FLYWHEEL?

SEE FLYWHEEL I.D. CHART ON PAGE 342

TC3 CAM PLATE

S&S cam support plates are just what the doctor ordered when repairing a damaged engine or installing new camshafts. CNC machined from forged aluminum for excellent strength and dimensional accuracy. S&S cam support plates are available to fit 1999–2006 and 2007–later Harley-Davidson® big twin engines. We don't want to encourage bad habits so plates for 1999–2006 are not compatible with stock spring-loaded chain tensioners, and require late style hydraulic tensioners and oil pump. We suggest the S&S TC3 oil pumps be installed with S&S TC3 Cam Plate.



310-0625

FITMENT

- 1999–'06 big twins *except 2006 Dyna® models**

FEATURES AND BENEFITS

- Precision CNC machined forged aluminum
- Adjustable oil pressure regulator — adjust without removing plate from engine
- Passage plugs are removable for service
- Rebuildable — bronze pinion shaft bushing in all models and bronze cam bushings in 2007–later style
- Made in the USA!

*Not compatible with stock spring-loaded chain tensioners or stock 1999–2006 oil pumps.
A 2007–later style oil pump is required for all applications. 2007–later style hydraulic tensioners are required for chain drive cams.

TC3 CAM PLATE

Fitment	Part #
1999–2006 bt *(except 2006 Dyna® models)*	**310-0623**

TC3 OIL PUMP

If motor oil is the lifeblood of an engine, then the oil pump is its heart. If your engine needs a transplant, the S&S TC3 Oil Pumps are a great solution for worn out or destroyed stock units. Common causes of stock pump failure are debris and excessive pinion shaft run out. The new S&S oil pumps are much less likely to be damaged by either. Oh, and by the way, the S&S TC3 Oil Pumps pump and scavenge way more oil than stock. While you've got that motor apart, it would be a good time to install a forged S&S TC3 Cam Plate.



FITMENT

- 1999–'06 Harley-Davidson® big twin engines*
- 2007–'16 Harley-Davidson big twin engines

FEATURES AND BENEFITS

- Consistent pressure and reliable scavenging
- Separate scavenge sections for flywheel cavity and cam chest – *no interference*
- Screens and magnetic traps help protect the scavenge rotors from debris
- Special design allows S&S pumps to tolerate more pinion shaft run out without damage
- Made in the USA!

TC3 OIL PUMP

Fitment	Part #
1999–2006 bt *(except 2006 Dyna® models)*	**310-0640**

*S&S oil pumps for 1999–'06 are not compatible with S&S cam support plates for 1999–'06 engines. All S&S cam support plates are machined for 2007–later style oil pumps.

TC3 OIL PUMP & CAM PLATE KITS



TC3 OIL PUMP AND CAM PLATE KITS

Fitment	Part #
1999–2006 bt *(except 2006 Dyna® models)*	**310-0731**

REPLACEMENT PARTS: SEE PAGE 216 & 217

NEW FOR 2020 FROM S&S CYCLE

DIE CAST GEARCOVER

FITMENT
- 1999–'17 Twin Cam 88®, 96™ and 103™ *(except '17 touring)*



DIE CAST GEARCOVER

Finish		Part #
Gloss Black	143"	**310-1084**
	124"	**310-1085**
	111"	**310-1086**
Chrome±	143"	**310-1087**
	124"	**310-1088**
	111"	**310-1089**

±⚠WARNING: Cancer and Reproductive Harm – www.P65Warnings.ca.gov

BILLET GEARCOVER

FITMENT
- 1999–'17 Twin Cam 88®, 96™ and 103™ *(except '17 touring)*

BILLET GEARCOVER

Finish	Part #
Polished	**31-6516** USA
Chrome	**106-3774**± USA

±⚠WARNING: Cancer and Reproductive Harm – www.P65Warnings.ca.gov



31-6516

NOTES

The S&S gearcover is not compatible with 1999–'01 engines with stock fuel injection or ignition systems which require a cam position sensor in the gearcover.

May be used in 1999–'01 engines if an aftermarket ignition or fuel injection system, that does not require a cam position sensor, is installed.

BILLET OIL FILTER BRACKET

FITMENT
- 1999–'06 big twin *(except 2006 Dyna® models)*

BILLET OIL FILTER BRACKET

Finish	Part #
Polished *26261-99*	**31-6510** USA
Chrome	**106-3884** USA

±⚠WARNING: Cancer and Reproductive Harm – www.P65Warnings.ca.gov



31-6510

CYLINDERS WITH PISTONS KIT

- Cylinder w/piston kits include fitted pistons and cylinders, head gaskets, base, and exhaust gaskets
- Cylinder kits with pistons are honed to fit the pistons included.



S&S® 4⅛" BORE CYLINDERS WITH PISTONS SPECIFICATIONS

Displacement	Stroke	Cylinder Length	Forged Piston type	Compression Ratio			
				85cc Stock heads	89cc S&S heads	91cc S&S heads	SE 95cc he
124"	4.625	5.013	Flat Top	11.4:1	11.0:1	10.8:1	10.5:1
124" Dish	4.625	5.013	10.9 cc dish	10.5:1	10.2:1	10.0:1	9.7:1
117"	4.375	4.888	Flat Top	10.9:1	10.5:1	10.3:1	10.0:1
117" Dish	4.375	4.888	10.9 cc dish	10.0:1	9.7:1	9.6:1	9.3:1
111"	4.125	4.763	Flat Top	10.3:1	9.9:1	9.8:1	9.4:1

4⅛" BORE CYLINDERS WITH PISTONS FOR 124", 117", & 111" KIT

Displacement	Bolt Pattern	Silver	Wrinkle Black
124" Hot Set Up - Stock Heads	Stock	**910-0215**	**910-0223**
124" Hot Set Up - S&S 89cc/91cc Heads	Stock	**910-0214**	**910-0222**
124"	S&S	**910-0216**	**910-0226**
117"	S&S	**910-0217**	**910-0227**
111"	Stock	**910-0017**	**910-0025**
111"	S&S	**910-0218**	**910-0277**

DISCLAIMER: NOT LEGAL FOR SALE OR USE IN CALIFORNIA ON ANY POLLUTION CONTROLLED MOTOR VEHICLE. NOT LEGAL FOR SALE OR USE NATIONWIDE ON ANY FEDERAL POLLUTION CONTROLLED MOTOR VEHICLE UNDER THE CLEAN AIR ACT

S&S® 4" BORE BOLT-IN SIDEWINDER® KITS SPECIFICATION CHART

Displacement	Bore	Stroke	Cylinder Length	Piston Type	Dome Volume	Compression Ratio		
						83cc CNC Heads	85cc Stock Heads	89cc S&S Heads
100"	4.00"	4.00"	4.937"	Forged	8.75 pop up	10.8:1	10.5:1	10.1:1

4" BORE BOLT-IN SIDEWINDER® BIG BORE KITS*

Displacement	Silver	Wrinkle Black
100	**910-0642**	**910-0646**

DISCLAIMER: NOT LEGAL FOR SALE OR USE IN CALIFORNIA ON ANY POLLUTION CONTROLLED MOTOR VEHICLE. NOT LEGAL FOR SALE OR USE NATIONWIDE ON ANY FEDERAL POLLUTION CONTROLLED MOTOR VEHICLE UNDER THE CLEAN AIR ACT

S&S® 98" & 97" BIG BORE KIT SPECIFICATION CHART

Displacement	Bore	Stroke	Cylinder Length	Forged Piston Type	Bolt Pattern	Compression Ratio (with provided .045" head gasket)					
						83cc Heads	79cc S&S Heads	85cc Heads	87cc Heads	89cc S&S Heads	90cc Heads
98"	3.937"	4.00"	4.937"	10cc Dome	Stock	10.5:1	n/a	10.3:1	10.1:1	n/a	9.8:1
97"*	3.927"	4.00"	4.937"	3cc Dome	Stock	n/a	9.7:1	10.3:1	n/a	9.4:1	n/a

**For an additional .2 bump in compression, order .030" thick head gaskets #900-0605 (2 pack). Remember to check your clearances.*

BIG BORE KIT

Displacement	Bolt Pattern	Silver	Wrinkle Black
98" Big Bore Kits	Stock	**910-0482**	**910-0481**
97" Big Bore Kits	Stock	**910-0201**	**910-0205**

DISCLAIMER: NOT LEGAL FOR SALE OR USE IN CALIFORNIA ON ANY POLLUTION CONTROLLED MOTOR VEHICLE. NOT LEGAL FOR SALE OR USE NATIONWIDE ON ANY FEDERAL POLLUTION CONTROLLED MOTOR VEHICLE UNDER THE CLEAN AIR ACT

CYLINDERS WITH PISTONS KIT CON'T

S&S® 3⅞" BORE CYLINDERS WITH PISTONS SPECIFICATION CHART							
Displacement	Stroke	Cylinder Length	Forged Piston Type	Bolt Pattern	COMPRESSION RATIO		
					85cc Stock Heads	79cc S&S Heads	89cc S&S Heads
106" Stroker	4½"	4.937"	Forged	Stock	10.1:1	10.8:1	9.8:1
95"	4"	4.937"	Forged	Stock	9.7:1	10.3:1	9.9:1

3⅞" BORE CYLINDERS WITH PISTONS FOR 106" & 95" KIT

Displacement	Bolt Pattern	Silver	Wrinkle Black
106" Stroker	Stock	910-0199	910-0203
95"	Stock	910-0200	910-0204

ALL OTHER BORES AND FINISHES ARE AVAILABLE THROUGH SPECIAL ORDER **91-7506***
**Special Order: Download the Special Order Form at sscycle.com/soforms*

NOTES

S&S® highly recommends installing a performance cam for easier starting and better engine performance.
S&S high flow cylinder heads will provide further horsepower gains.
These kits require tuning.

CYLINDERS

- Individual cylinders and cylinder sets without pistons are bored slightly under nominal size and are not honed.



4.425" BORE CYLINDERS WITHOUT PISTONS FOR T143

Displacement		Silver	Black
143"	Set	910-0568	910-0565

DISCLAIMER: NOT LEGAL FOR SALE OR USE IN CALIFORNIA ON ANY POLLUTION CONTROLLED MOTOR VEHICLE. NOT LEGAL FOR SALE OR USE NATIONWIDE ON ANY FEDERAL POLLUTION CONTROLLED MOTOR VEHICLE UNDER THE CLEAN AIR ACT

4⅛" BORE CYLINDERS

Displacement		Silver	Wrinkle Black	Polished
124" Hot Set Up	Set	910-0234	910-0255*	–
124"	Set	910-0237	910-0264	910-0249
117"	Set	910-0240	–	–
111"	Set	910-0243	910-0281	–

DISCLAIMER: NOT LEGAL FOR SALE OR USE IN CALIFORNIA ON ANY POLLUTION CONTROLLED MOTOR VEHICLE. NOT LEGAL FOR SALE OR USE NATIONWIDE ON ANY FEDERAL POLLUTION CONTROLLED MOTOR VEHICLE UNDER THE CLEAN AIR ACT

3⅞" BORE CYLINDERS

Displacement		Wrinkle Black
106" Stroker	Set	910-0208

3.937" BORE CYLINDERS

Displacement		Silver	Wrinkle Black
98"	Front or Rear	910-0478	910-0477

DISCLAIMER: NOT LEGAL FOR SALE OR USE IN CALIFORNIA ON ANY POLLUTION CONTROLLED MOTOR VEHICLE. NOT LEGAL FOR SALE OR USE NATIONWIDE ON ANY FEDERAL POLLUTION CONTROLLED MOTOR VEHICLE UNDER THE CLEAN AIR ACT

3.927" BORE CYLINDERS

Displacement		Silver	Wrinkle Black
97"	Front or Rear	910-0210	910-0212

ALL OTHER BORES AND FINISHES ARE AVAILABLE THROUGH SPECIAL ORDER **91-7506***
**Special Order: Download the Special Order Form at sscycle.com/soforms*

CYLINDER REPLACEMENT PARTS: SEE PAGE 220

PISTON KITS

• Piston kits include set of pistons, rings, wristpins, and clips



920-0046
Dish topped



106-3491A
Flat topped

4.425" BORE FORGED PISTON KITS FOR T143

Displacement	Deck Height	Stroke	Standard	+.020"
T143	1.167"	4⅝"	**920-0106**	**920-0111**

DISCLAIMER: NOT LEGAL FOR SALE OR USE IN CALIFORNIA ON ANY POLLUTION CONTROLLED MOTOR VEHICLE. NOT LEGAL FOR SALE OR USE NATIONWIDE ON ANY FEDERAL POLLUTION CONTROLLED MOTOR VEHICLE UNDER THE CLEAN AIR ACT

4⅛" BORE FORGED PISTON KITS FOR HOT SET UP KITS®

Displacement	Deck Height	Stroke	Standard	+.010"	+.020"	+.030"
124" & 117" Stock Heads 10cc Dished	1.050"	Up To 4⅝"	**920-0046**	**920-0047**	**920-0050**	**920-0053**
124", 117" & 111" -Stock or S&S Heads Flat Top	1.050"	Up To 4⅝"	**106-3491A**	**106-3872A**	**106-3964A**	**920-0094**

4" BORE FORGED PISTON KIT

Displacement	Deck Height	Dome Height	Stroke	Standard
100	1.270	8.75cc	4"	**920-0129**



92-1210
106" Stroker

3.937" BORE FORGED PISTON KIT

Displacement	Deck Height	Dome Height	Stroke	Standard
98"	1.270"	10cc	4"	**920-0101**



92-1200
95"

3.927" BORE FORGED PISTON KITS

Displacement	Deck Height	Dome Height	Stroke	Standard	+.010"
97"	1.270"	3cc	4"	**106-3688**	**106-4414**

3⅞" BORE FORGED PISTON KITS

Displacement	Deck Height	Stroke	Standard	+.005"	+.010"	+.020"
106" Stroker	1.020"	4 ½"	**92-1210**	**92-1214**	**92-1211**	**92-1212**
95"	1.270"	4"	**92-1200**	**92-1204**	**92-1201**	**92-1202**

NOTE

S&S' 3⅞" pistons for 95" kits and 4⅛" pistons are machined to such close tolerances that it is not necessary to measure the piston. Additionally, the low friction coating on the piston skirt makes taking measurements very difficult. Therefore, hone cylinders to nominal diameter +/- 0.0005" for correct clearance.

S&S' 3.937" & 3.927" pistons are machined to such close tolerances that it is not necessary to measure the piston. Additionally, the low friction coating on the piston skirt of early production pistons with out micrometer window makes taking measurements very difficult. Therefore, hone cylinders to nominal diameter +/- 0.0001" for correct clearance. Current production pistons have micrometer windows in the coating on the piston skirts that allow accurate measurements to be taken. These pistons may be installed by honing cylinder to nominal diameter +/- 0.0001" or by measuring piston and honing cylinder to achieve .002"–.0025" close clearance for street applications or .0032"–.0045" loose clearance for immediate competition use.

REPLACEMENT PARTS FOR PISTONS

PISTON RINGS, CHROMOLY FACED

Bore	Standard	+.005"	+.010"	+.020"	+.030"
4.425"	**940-0043**	–	–	**940-0044**	–
4⅛"	**940-0014**	–	**940-0012**	**940-0013**	**940-0017**
3.937"	**940-0032***	–	–	–	–
3.927"	**106-3709A**	–	**106-4422A**	–	–
3⅞" for 106" Stroker	**94-1295X**	**94-1299X**	**94-1296X**	**94-1297X**	–
3⅞" for 95" Kit	**94-1290X**	**94-1294X**	**94-1291X**	**94-1292X**	–
4"	**940-0056†**	–	–	–	–

**Only includes one set of rings.*

†DISCLAIMER: NOT LEGAL FOR SALE OR USE IN CALIFORNIA ON ANY POLLUTION CONTROLLED MOTOR VEHICLE. NOT LEGAL FOR SALE OR USE NATIONWIDE ON ANY FEDERAL POLLUTION CONTROLLED MOTOR VEHICLE UNDER THE CLEAN AIR ACT

REPLACEMENT PISTON WRISTPINS

Description		Part #
Wristpin	For 4.425" Pistons	**940-0037**
	For 4 ⅛" Pistons (92-1550 Series)	**94-9277**
	For 4 ⅛", 3 ⅞", 3.927" Pistons	**106-1052**
	For 3.937" Pistons	**940-0033**

REPLACEMENT PISTON KEEPERS

Description		Part #
Keeper	*each*	**94-9278-S**
	2 pack	**94-9278-2**
	4 pack	**106-2304**
Keeper for 4.425"	*each*	**94-9278-S**
Keeper For 3.937" & 4"	*2 pack*	**940-0034**

POWER PACK

Bump 1999–'06 engines from 88ci to 100ci and 2007-'17 engines from 96ci or 103ci to 110ci with the new S&S 4" big bore kit. The kit also includes matched cams, cam plate, oil pump and everything else a high performance big inch engine needs to reliably make serious power.



FITMENT

- 1999–06 big twin except 2006 Dyna® models

FEATURES AND BENEFITS

- Largest big bore kit available without doing crankcase mods
- Upgrade Twin Cam 88 to 100 cu inches
- Cylinders fit to pistons—No machining required
- All parts required to upgrade to gear drive cam or hydraulic tensioners
- Engineered package to deliver the best bolt-in performance available

POWER PACKAGE KIT

Fitment	Finish	Cam	Drive	Part #
1999–'06 *except '06 Dyna®*	Silver	585CE	Chain	**330-0662**
1999–'06 *except '06 Dyna®*	Silver	585GE	Gear	**330-0663**
1999–'06 *except '06 Dyna®*	Black	585CE	Chain	**330-0664**
1999–'06 *except '06 Dyna®*	Black	585GE	Gear	**330-0665**

DISCLAIMER: NOT LEGAL FOR SALE OR USE IN CALIFORNIA ON ANY POLLUTION CONTROLLED MOTOR VEHICLE. NOT LEGAL FOR SALE OR USE NATIONWIDE ON ANY FEDERAL POLLUTION CONTROLLED MOTOR VEHICLE UNDER THE CLEAN AIR ACT

NOTES

1999–'04 engines will require the additional purchase of valve springs pn 900-0593.

Pinion shaft runout must be less that .003" to use gear drive cams.

Kit not available to fit '06 Dyna® models but parts may be purchased separately.

Not for use with S&S 79cc Cylinder Heads.

Not for use on trike models.



CAMSHAFT OVERVIEW

OES: Original Equipment Specification (OES). A bolt-in replacement cam with stock cam timing is designed for riders with stock engines. Does not require tuning. Bolt-in stock. Equivalent to HD® A-Grind

505C: Bolt-in cam, low-end torque and mid-range horsepower. Good for heavy bikes. Stock comp. ratio. Compatible with stock valve springs. Range: Idle to 5,000 rpm

509: Designed as a bolt-in, high torque cam for 1999–'06 models. 180 psi cranking compression, no need for compression releases. For 88 CID engines with stock compression ratio. Idle–4500 rpm. Bolt-in torque.

510: Designed as a bolt-in cam for 88, 95, and 96 CID engines with compression ratios below 9.7:1, it is primarily intended for use with stock, un-ported heads. 3000–5500 rpm. Bolt-in overall.

551: Designed for engines with 96 to 106 CID and 9:1 to 9:9 compression this cam set designed for stock or mildly modified touring bikes. 551 cams are not recommended for compression ratios of 10:1 or greater. Greatly improves low-end and midrange torque, strongest from idle–4000rpm.

570: Designed for 88 to 103 CID engines with compression ratios between 9:1 and 10:1 this cam will provide a nice power increase across the entire power band. 3200–5700 rpm. Excellent bolt-in for overall power on 103".

583: Optimized for use in the Softail®/Dyna® lines, this cam makes horsepower and torque that you can feel all the way through the rpm range, making the most power right where you need it:1500–5000rpm. 583 cams are not recommended for enginess having comression ratios greater than 10.1:1

CARB compliant
EO #D-355-14

585: Designed for 88 to 95 CID engines with compression ratios from 9.7:1 to 10.5:1 and 100 to 124 CID engines from 9:1 to 10:1 compression. Provides massive horsepower and torque increases starting at 3000rpm and holds steady all the way to redline. 3500-6000 rpm for 88"–103" engines and 2500–5500 for larger engines.

625: Cam set designed for 95" or larger engines with compression ratios between 10.0 and 10.75:1. 3000–6000 rpm.

MR103: Designed as bolt-in cams for 103 CID engines with stock 9.7:1 compression ratio up to 10.5:1. Works well with stock, un-ported heads, but is great for S&S CNC ported heads. More power across the rpm range best results form 2500–5500 rpm. Bolt-in.

HP103: Designed as bolt in cams for engines with 103 and stock 9.7:1 compression up to 10.5:1. Works well with stock, un-ported heads, but is great for S&S CNC ported heads. Best power in the higher rpm range, 3000–6000 rpm. Bolt-in.

635 H.O.: High lift cam for modified engines with 106" or greater displacement and compression ratios between 10.0:1 and 11.0:1. Works well with stock, un-ported heads, but S&S CNC ported heads are recommended. Best power from 3000–6000 rpm. This is not a bolt-in cam set. High-lift springs and clearance checks are required.

640: Used in S&S T124 engines, this cam makes horsepower! Intended for engines of 95 CID or more w/compression ratios between 10.5:1 and 11.5:1. 3000-6000 rpm.

675: A high lift monster, this cam set is designed for 120" or larger engines with at least 11:1 compression ratio. 4500–6500 rpm.

NOTE

Stock valve springs in 1999–'04 big twin models can handle cams with valve lifts as high as .515". Stock valve springs in 2005–up engines can accommodate valve lifts up to .590".

SPECIFICATIONS OF S&S® CHAIN & GEAR DRIVE CAMSHAFTS FOR 1999-UP BIG TWINS

Cam Name	Bolt-In	Valve Timing (open/close)		Valve Duration		Valve Lift	Centerline		Lift @ TDC		APPLICATION CROSS REFERENCE		
		Intake	Exhaust	Intake	Exhaust		Intake	Exhaust	Intake	Exhaust	HD® Screamin' Eagle®	Andrews®	Most Fitting
		Open BTDC/ Close ABDC	Open BBDC/ Close ATDC										
OES	●	2˚/34˚	36˚/4˚	216˚	220˚	.475"	106˚	106˚	.060"	.060"	A-Grind		
505C	●	20°/36°	47°/15°	236°	242°	.505"	98˚	106˚	.185"	.157"			
509	●	18˚/18˚	46˚/11˚	216˚	237˚	.509"	90˚	107.5˚	.174"	.140"			
510	●	20˚/38˚	52˚/20˚	238˚	252˚	.510"	99˚	106˚	.187"	.178"			
551**		17°/19°	41°/17°	216°	238°	.550"	91˚	102˚	.178"	.170"	SE-203/255	21H/26H	Touring
570		20˚/40˚	55 ˚/20˚	240˚	255˚	.570"	100˚	107.5˚	.187"	.179"	–	54H	All Big Twin
583		5˚/18˚	58˚/24˚	203˚	262˚	.583"	96.5˚	107˚	.113"	.206"	SE-203/255	21H/26H	Softail®/Dyna®
585		20˚/45˚	60˚/20˚	245˚	260˚	.585"	102.5˚	110˚	.186"	.179"	SE-211/251/257	31H/32H/ 50H/55H/67H	All Big Twin
625		20˚/55˚	60˚/20˚	255˚	260˚	.625"	107.5˚	110˚	.189"	.184"	SE-258/260	60H	All Big Twin
635		19.5°/43.5°	58.5°/37.5°	243°	276°	.635"	102°	100.5°	.186"	.284"			
MR103		13°/33°	50°/22°	226°	252°	.585"	104°	104°	.172"	.177"			
HP103		20°/49°	45°/26°	249°	251°	.575"	102.7°	101.5°	199"	.206"			
640		25˚/60˚	65˚/25˚	265˚	270˚	.640"	107.5˚	110˚	.228"	.214"	SE-264	59H	All Big Twin
675		25˚/64˚	70˚/25˚	269˚	275˚	.675"	109.5˚	112.5˚	.235"	.205"	–	64H	Race

**Note: Although several cam grinds were used in stock engines from 1999-'06, the timing specs of the 475G cams is most similar to cams used in 1999-'03 EFI engines.*
***551 cams are not recommended with compression ratio of 10:1 or higher.*

All reference to HD® and Andrews® part numbers is for identification purposes only. We in no way are implying that any of S&S Cycle's products are original equipment parts or that they are equivalent to the corresponding HD® part number shown. Use of brand names such as Harley-Davidson® Sportster® are also for reference only.

CAMSHAFT OVERVIEW CON'T

S&S EASY START CAMS

Start any engine regardless of displacement or compression ratio, with a stock starter. Easy Start Cams from S&S® Cycle make hard starting obsolete for 1999-'12 big twins. Available in economical chain drive and rock-solid gear drive versions. Don't get caught "dead" without them!

FEATURES AND BENEFITS

- Start any engine with a stock starter
- Save your starter and battery!
- Reliable – *tested for 100,000 accumulative starts and over 150,000 road miles without breakage or compression release failure!*
- Automatic – *no buttons to push*

OPTIONS

- Chain drive or gear drive *(See the following pages for part numbers)*

HERE'S HOW IT WORKS

Each of the two exhaust cam lobes are equipped with a spring loaded compression release lobe on the "heel" of the cam at the point where the valve would normally be fully closed. The lobe holds the exhaust valve open slightly at cranking speed. This releases some of the compression, making the engine much easier to crank. Once the engine starts, and rpm increases, the compression release lobe is centrifugally retracted and the engine runs normally, with full compression, and without any loss in performance. This allows a stock starter and battery to start nearly any engine.

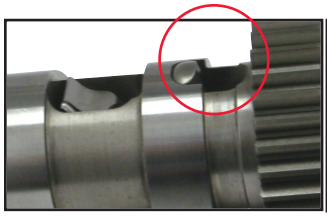

The compression release lobe reduces compression until the engine starts.

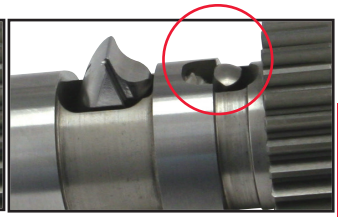

Increased rpm causes the compression release lobe to be centrifugally retracted so the engine runs normally.

GEAR DRIVE CAM KITS



FEATURES AND BENEFITS

- Improves valve timing accuracy by eliminating timing chain lash
- Easy Start Cams allow stock starter to start any engine
- No tensioner shoes to wear out or fail

OPTIONS

WHICH S&S GEAR DRIVE CAM KIT TO ORDER?

- If updating a stock chain drive system, it's easiest to order a complete kit. Includes:
  - Camshafts with inner gears
  - Outer cam drive gear kit
  - Camshaft installation kit
- If replacing cams in an engine already equipped with S&S gear drive cams, order cams with inner gears and reuse the existing outer gears. Camshaft installation kit for the appropriate model year is recommended.
- If installing a set of gear drive cams from another manufacturer, order S&S cam gear kits for the appropriate model year. Each kit provides the inner cam gear as well as an outer cam gear. Camshaft installation kit for the appropriate model year is recommended.

CARB compliant
EO #D-355-14

GEAR DRIVE CAMS FOR 1999–'06 MODELS *(EXCEPT 2006 DYNA®)**

Cam Name	Easy Start		Standard	
	Complete Kit	Cams w/Inner Gears	Complete Kit	Cams w/Inner Gears
	Stock Oil Pump	Stock Oil Pump	Stock Oil Pump	Stock Oil Pump
OES	–	–	**106-4033**†	**106-4385**†
509	–	–	**330-0017**	**330-0018**
510	–	–	**33-5177**	**33-5174**
551	**106-5442**	**106-5441**	**330-0100**	**330-0099**
570	**106-5243**	**106-5242**	**33-5178**	**33-5166**
583††	**106-5859**	**106-5858**	**330-0107**	–
585	**106-5247**	**106-5246**	**33-5179**	**33-5168**
625	**106-5251**	**106-5250**	**33-5180**	**33-5170**
MR103	**330-0466**	**330-0467**	**330-0462**	**330-0463**
HP103	**330-0452**	**330-0453**	**330-0448**	**330-0449**
635 H.O.	**330-0438**	**330-0439**	**330-0432**	**330-0435**
640	**106-4840**	**106-4839**	**33-5181**	**33-5172**
675	**106-5255**	**106-5254**	–	–

**2006 Dyna® install kit is in Section 2.*

DISCLAIMER: NOT LEGAL FOR SALE OR USE IN CALIFORNIA ON ANY POLLUTION CONTROLLED MOTOR VEHICLE. NOT LEGAL FOR SALE OR USE NATIONWIDE ON ANY FEDERAL POLLUTION CONTROLLED MOTOR VEHICLE UNDER THE CLEAN AIR ACT

†Exempt from emissions tampering regulations in 1999-2006 applications originally equipped with H-D? "A" grind camshafts under CARB EO# D-355-14

NOTES

††This cam kit is not for touring models and does not work with compression over 9.9 to 1

Pinion shaft run-out must be checked before installing S&S® gear drive cams. Gear Drive cams should only be used in engines with pinion shaft runout of no more than .003"

A hydraulic press and other professional tools are required to install S&S gear drive cams. Additionally, material must be removed from the inner surface of the stock gearcover. The stock crankcase will require clearancing for S&S .625", .640", and .675" lift cams. S&S recommends that gear drive cams be installed by a professional mechanic.

New cam bearings and a new gearcover gasket are required to complete cam installation. Gear drive cams for 1999–'06 models require the use of ball bearing style cam bearing rather than the stock roller bearing. Roller bearings have more internal clearance which can cause excessive gear lash and increased noise. The correct parts are provided in S&S Camshaft Installation Kit, part #106-5896.

Due to the inherent characteristics of gear drives, you may experience more valve train noise with gear driven cams. Oversized and undersized gears are available to help achieve correct gear lash. We have found that with 160 lb. of valve seat force, the S&S gear drive cams will perform well up to 6200 rpm. If higher rpm is anticipated, valve springs that provide higher seat force should be used.

S&S can do a special order cam. Contact your S&S Customer Service Representative for more information.

CHAIN DRIVE CAM KITS

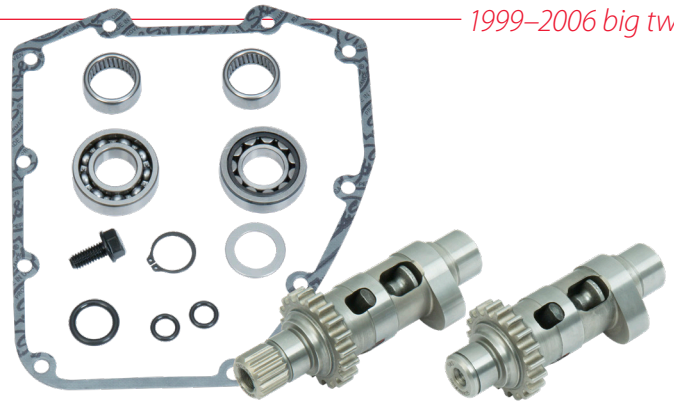

FEATURES AND BENEFITS

- Increase performance at an affordable price
- Quick installation—reuse many stock components
- Easy Start Cams allow stock starter to start any engine

KIT CONTENTS

- Cams
- Installation Kit: gearcover gasket, bearings, retaining ring, o-ring, thread lock
- Instructions

NOTES

††This cam kit is not for touring models and does not work with compression over 9.9 to 1.

If OES, 509 or 510C cams are used with the stock chain drive system in Twin Cam 88® engines, it is recommended to use cylinder heads with stock valve springs or performance valve springs with no more than 160 lb. of seat force. For more demanding applications, we recommend the S&S gear drive cams.

When using 1999–'06 chain drive cams for lifts over .510", S&S strongly recommends that the stock chain drive be upgraded to the S&S gear drive or to the HD® #25284-08 or #25284-11 hybrid plate. This kit updates the problematic spring loaded chain tensioners to reliable hydraulic tensioners and also upgrades the oil pump.

551 and 583 cams are not recommended with compression ratio of 10:1 or higher.

S&S can do a special order cam. Contact your S&S Customer Service Representative for more information.

DISCLAIMER: NOT LEGAL FOR SALE OR USE IN CALIFORNIA ON ANY POLLUTION CONTROLLED MOTOR VEHICLE. NOT LEGAL FOR SALE OR USE NATIONWIDE ON ANY FEDERAL POLLUTION CONTROLLED MOTOR VEHICLE UNDER THE CLEAN AIR ACT

CHAIN DRIVE CAM KITS FOR 1999–'06 MODELS *(EXCEPT 2006 DYNA®)*

Cam	Standard	Easy Start
OES	**330-0400**	–
505	**330-0374**	–
509	**330-0016**	–
510	**33-5182A**	–
551	**330-0002**	**106-5293**
570	**330-0003**	**106-5296**
583††	**330-0004**	**106-5289**
585	**330-0005**	**106-5299**
625	**330-0006**	**106-5302**
MR103	**330-0456**	**330-0459**
HP103	**330-0442**	**330-0445**
635 H.O.	**330-0426**	**330-0429**
640	**330-0007**	**106-5305**

**2006 Dyna® cams are in Section 2.*

CAM RELATED PARTS



33-4275

CAM GEAR DRIVE KITS

Fitment	Part #
1999–'06 bt	**33-4275**

(Includes front and rear inner cam gears, pinion gear, and outer cam gear)



33-4276

OUTER CAM DRIVE GEAR KIT

Fitment	Part #
Fits 1999–'06 bt	**33-4276**

HARDWARE PACK FOR OUTER CAM GEAR

Description	Part #
Hardware Pack, Fits 1999–up bt	**33-4271P**
Replacement Key	**106-1348**



33-4271P

HEAVY DUTY CAM BEARING PLATE

Fitment	Part #
Fits 1999–'06 bt	**33-5212**



33-5212

CAM NEEDLE BEARINGS ASSEMBLIES

Fitment	Part #
Inner Cam Bearing 1999–'06 bt *(except 2006 Dyna®)* 9198	**31-4080**



31-4080

REPLACEMENT GEARS, OVERSIZED & UNDERSIZED

Description		Fitment	Part #
Cam Drive Gear Set		1999–up	**33-4293**
Outer Rear Cam Drive Gear Only		1999–'06 *(except '06 Dyna)*	**106-4882**
Inner cam gear, Front or Rear		1999–'06 *(except '06 Dyna)*	**330-0550**
Rear Inner Cam Gear, Undersized		1999–'06 *(except '06 Dyna)*	**330-0551**
Rear Inner Cam Gear, Oversized		1999–'06 *(except '06 Dyna)*	**330-0552**
Pinion Gears	Standard Size	1999–up	**33-4160**
	Undersized		**33-4160X**
	Double Under		**33-4160XX**
	Oversized		**33-4160Z**
	Double Over		**33-4160ZZ**

Due to machining variations in the stock cam plate, oversized or undersized gears may be needed to achieve correct gear lash.

REPLACEMENT INSTALLATION KITS

Description	Standard
For S&S Chain Drive Cams	**33-5175**
For S&S Gear Drive Cams	**106-5896**

Includes a gearcover gasket, cam bearings, retaining ring, o-ring, thread lock and instructions.

All reference to HD® part numbers is for identification purposes only. We in no way are implying that any of S&S Cycle's products are original equipment parts or that they are equivalent to the corresponding HD® part number shown.

CAM CHEST UPGRADE
GEAR OR CHAIN DRIVE

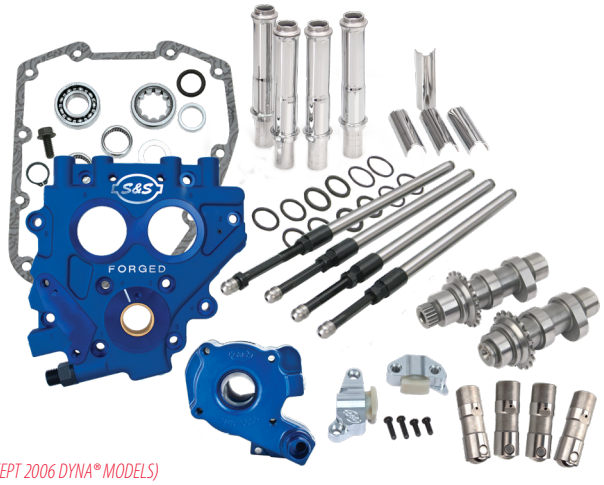

FITMENT
- 1999–'06 Harley-Davdison® big twins & 2006 Dyna® models *(except 2006 Dyna® models)*

FEATURES
- Upgrade to S&S bolt-in performance chain drive or gear drive camshafts
- Upgrade 1999–'06 models to 2007–'16 style oil pump
- Improved engine performance — higher lift and optimized cam timing
- S&S Quickee pushrods — easy installation, without removing rocker covers
- Replace stock oil pump, cam support plate, cams, chain tensioners, and tappets with all new premium U.S. made S&S components
- Better, more consistent oil pressure

CHAIN DRIVE CAM CHEST UPGRADE KIT FOR 1999–'06 BIG TWINS *(EXCEPT 2006 DYNA® MODELS)*

Cam	Part #
509C Standard	**330-0540**
510C Standard	**330-0541**
551CE Easy Start	**330-0542**
585CE Easy Start	**330-0543**

DISCLAIMER: NOT LEGAL FOR SALE OR USE IN CALIFORNIA ON ANY POLLUTION CONTROLLED MOTOR VEHICLE. NOT LEGAL FOR SALE OR USE NATIONWIDE ON ANY FEDERAL POLLUTION CONTROLLED MOTOR VEHICLE UNDER THE CLEAN AIR ACT

GEAR DRIVE CAM CHEST UPGRADE KIT FOR 1999–'06 BIG TWINS *(EXCEPT 2006 DYNA® MODELS)*

Cam	Part #
509G Standard	**310-0810**
510G Standard	**310-0811**
551GE Easy Start	**310-0812**
585GE Easy Start	**310-0813**

DISCLAIMER: NOT LEGAL FOR SALE OR USE IN CALIFORNIA ON ANY POLLUTION CONTROLLED MOTOR VEHICLE. Not legal for sale or use on any EPA pollution controlled motor vehicle.

NOTE

Stock valve springs in 1999–'04 big twin models can handle cams with valve lifts as high as .515". Stock valve springs in 2005–up engines can accommodate valve lifts up to .590".

HYDRAULIC CAM CHAIN TENSIONER KIT

FITMENT
- 2007–2016 big twin & 2006 Dyna® models
- 1999–'06 models with hydraulic cam plate upgrade

FEATURES
- Thicker shoe for longer wear
- Direct chain oiling
- Larger piston
- Tighter tolerance for improved stability
- Made in USA

HYDRAULIC CAM CHAIN TENSIONER KIT

Fitment	Part #
1999–'06 models with hydraulic cam plate upgrade	**330-0518**

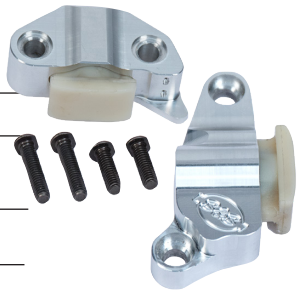

REPLACEMENT PARTS

Description	Part #
Tensioner,Asm,Inner,Body,Cam Chain	**330-0519**
Tensioner,Assembly,Outer,Body,Cam Chain	**330-0520**
Tensioner Shoe,Chain,Camshaft	**330-0521**

NEW FOR 2020 PRECISION TAPPETS

High performance tappets are a cornerstone of the S&S line up and we are always looking to improve our products. After months of research and countless hours of testing we are excited to reveal the latest in performance lifters. The S&S Cycle Precision Tappets replace both our standard as well as premium lifters. Each Precision Lifter is hand assembled to exacting tolerances and designed for quiet operation and rapid pump up and all are made in the USA.

FITMENT
- 1999–2017 big twins
- S&S T-Series engines

FEATURES
- Reduced valve train noise from start up to shut down
- Close tolerances for low leak down rates
- Fast pump up and superior high rpm performance

PRECISION TAPPETS

Set of 4 tappets	**330-0718**



TAPPET COVERS

FITMENT
- 1999–'16 big twin
- S&S crankcases

FEATURES AND BENEFITS
- CNC billet aluminum provides extra strength and dimensional stability over a wide temperature range
- Simple to install upgrade that looks great

KIT CONTENTS
- Covers
- Gaskets
- Installation hardware



33-5601

TAPPET COVER KITS

Finish	Part #
NEW FOR 2020 Gloss Black	**330-0588**
Polished	**33-5601** USA
Chrome	**106-3883**±

±⚠WARNING: Cancer and Reproductive Harm – www.P65Warnings.ca.gov

REPLACEMENT PARTS FOR TAPPET COVERS

Descriptions		Part #
Gasket	*each*	**33-5303-S** *18635-99B*
	2 pack	**33-5303-2** *18635-99B*
Screw w/flat washer, Zinc	*each*	**50-0092-S** *4741A*
	4 pack	**50-0092P** *4741A*
Screw, Chrome	*each*	**50-0482**±
Washer, Flat, Chrome	*each*	**50-7017**±

±⚠WARNING: Cancer and Reproductive Harm – www.P65Warnings.ca.gov

All reference to HD® part numbers is for identification purposes only. We in no way are implying that any of S&S Cycle's products are original equipment parts or that they are equivalent to the corresponding HD® part number shown.

QUICKEE ADJUSTABLE PUSHRODS

GLOSS BLACK ALSO AVAILABLE

FITMENT
- 1999–'17 big twins *(except 2017 touring models)* w/stock engine height +/- .050"

FEATURES AND BENEFITS
- Adjustable to accommodate all tappets and cam base circle diameters and engine heights
- Easy to install—removal of rocker box not needed
- No threads on wrench flats
- Also available in gloss black

KIT CONTENTS
- Pushrods, chrome pushrod covers, o-rings, and cover keepers

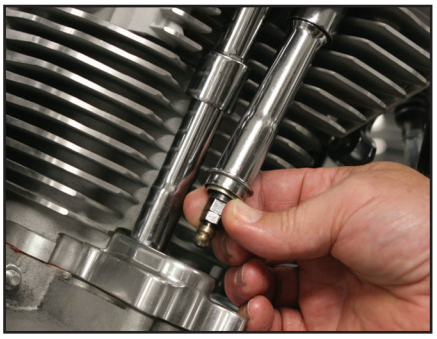

When a Quickee adjustable pushrod is collapsed, it can easily be installed or removed from an assembled engine.



QUICKEE ADJUSTABLE PUSHRODS

Description	Part #
Gloss Black Pushrod Kit *(includes black pushrod covers, o-rings & cover keepers)*	**930-0143**
Chrome Pushrod Kit *(includes chrome pushrod covers, o-rings & cover keepers)*	**106-6051** ± USA
Pushrods Only*	**93-5122** USA

Longer keepers are required for taller than stock engines. *See page 187* *for pushrod cover keepers.*
**1984–'99 style pushrod covers are required for access to the Quickee Adjustable Pushrod adjusters in 2007-'12 big twins.* *See page 187* *for pushrod covers.*
± ⚠ WARNING: Cancer and Reproductive Harm – www.P65Warnings.ca.gov

STANDARD ADJUSTABLE PUSHRODS



FITMENT
- 1999–'17 *(except '17 touring)*
- Lengths available for various displacements

FEATURES AND BENEFITS
- Adjustable to accommodate all tappets & cam base circle diameters

KIT CONTENTS
- Pushrods, chrome pushrod covers, tappet cover gaskets, o-rings, cover keepers

STANDARD ADJUSTABLE PUSHRODS FOR HARLEY-DAVIDSON® TWIN CAM 88®

Displacement	Engine Height	Cylinder Length	Pushrod Kit±	Pushrods Only	Pushrod Covers±	Cover Keepers±
88", 95", 96", 103", 106"	Stock	4.937"	**93-5095** USA	**93-5096** USA	**106-1340** USA	**93-4100**
124"	+.096"	5.013"	–	**93-5098**	**106-1340** USA	**93-4115** USA
T143	+.2875"	5.057"	–	**930-0103**	**106-1340**	**93-4102**
Special Order	Specify	Specify	–	**93-5102****	–	**93-4109***

**Custom, extra long stainless steel 4.250", customer to cut to required length* ***Special Order: Download the Special Order Form at sscycle.com/soforms*
± ⚠ WARNING: Cancer and Reproductive Harm – www.P65Warnings.ca.gov

NON-ADJUSTABLE PUSHRODS

FITMENT
- 1999–'06 Harley-Davidson® Twin Cam 88® big twin engines
- S&S T111

FEATURES AND BENEFITS
- Replaces stock pushrods perfectly
- 7/16" high strength chromoly steel tubing for increased strength
- Pushrods are marked with stock color code and valve position for easy installation



NON-ADJUSTABLE PUSHRODS—*PUSHRODS ONLY*

Fitment	Part #
1999–up	**930-0046**
T111	**930-0144**

PUSHROD COVERS & RELATED PARTS

FITMENT

- 1999–'17 big twins

PUSHROD REPLACEMENT PARTS

Description		Part #
Pushrod Cover Kit *(includes top & bottom covers, cover cap, cover spring, spring washer, & o-rings for four pushrods)* USA	Chrome	**106-1340**
	Gloss Black	**930-0124**
Top Cover USA USA 1,2,3	*each*	**93-4016** *17935-66T, 17935-79B*
Bottom Cover USA USA 1,2,3	*each*	**93-4015** *17938-83*
Cover Cap USA USA 1,2,3	*each*	**93-4017** *17945-36B*
Cover Spring USA USA 1,2,3	*each*	**93-4018** *17947-36*
Cover Cap Washer USA	*each*	**50-7131** *6762B*
Pushrod O-ring kit *(includes top, middle, and bottom o-rings for four pushrods)*		**93-4022**
Top O-ring	*each*	**50-8039** *11293, 11157, 11101, 11190*
Middle O-ring	*each*	**50-8038** *11132A*
Bottom O-ring	*each*	**50-8037** *11145A*



93-4016



93-4015



93-4017



93-4018



50-7131



50-8037



50-8039



50-8038

PUSHROD COVER KEEPER SETS FOR 2007–'17 BIG TWINS

Length / Finish		S&S Tubes	Part #
2.390" / Gloss Black			**930-0127**
2.400" / Chrome USA		All stock height TC 96/103	**93-4070**± *17950-48*
2.500"	Chrome	96", 100", 117", 103", 106" HSU	**93-4100**±
	Gloss Black		**930-0142**
2.600"	Chrome	124"	**93-4101**±
	Gloss Black		**930-0128**
2.800" / Chrome USA			**93-4115**± *17950-86*
2.900"	Chrome	143"	**93-4102**±
	Gloss Black		**930-0126**
3.000" / Chrome			**93-4103**±
3.100"	Chrome		**93-4104**±
	Gloss Black		**930-0125**
3.200" / Chrome			**93-4105**±
3.330" / Chrome USA			**93-4106**± *17949-40, 17950-66*
3.500" / Chrome			**93-4107**±
3.625" / Chrome			**93-4108**±
4.250"*			**93-4109**



93-4101

All S&S pushrod keepers are chromed steel, except part #93-4109. Keeper part #93-4109 is intended for unusually tall engines. It is manufactured of unchromed stainless steel to prevent rust or peeling after it is trimmed to the required length.

**Custom, extra long stainless steel 4.250", customer to cut to required length*

± ⚠ WARNING: Cancer and Reproductive Harm – www.P65Warnings.ca.gov

All reference to HD® part numbers is for identification purposes only. We in no way are implying that any of S&S Cycle's products are original equipment parts or that they are equivalent to the corresponding HD® part number shown.

SIDEWINDER® .650" VALVE SPRINGS

FITMENT
- Twin Cam 88® big twins w/stock heads (both 7mm and 5⁄16" valve stems)
- All S&S Super Stock® heads (5⁄16" valve stems)

FEATURES AND BENEFITS
- Works well with cams up to .650" lift
- Manufactured from ultra clean high silicon Kobe alloy wire then micro shot peened and nitrided
- CNC machined 9˚ locks
- High performance conical single wire spring
- Chromoly forged retainers

KIT CONTENTS
- Valve keepers, Top & Bottom collars, Springs, Shims

S&S® .SIDEWINDER .650" VALVE SPRINGS SPECIFICATIONS

Lift	Installed Height	Seat Force	Force @ Max Lift	Max RPM
.650"	1.860"	178 lb.	376 lb.	6500



106-5909

SIDEWINDER .650" VALVE SPRING KITS

Description	Part #
1999–'04 (5⁄16" valve stems) *	**900-0050**
2005–'17 big twins (7mm stems) *except 2017 touring models*	**106-5909**

**Does not include seals*

NOTE S&S recommends roller rocker arms be used with lifts over .585"

STREET PERFORMANCE .585"

FITMENT
- Twin Cam 88® big twins w/stock heads (both 7mm and 5⁄16" valve stems)
- All S&S Super Stock® heads (5⁄16" valve stems)

FEATURES AND BENEFITS
- Single wire conical shape
- Suitable for high performance applications
- Accommodates camshaft lift to 0.585"

S&S® .STREET PERFORMANCE .585" VALVE SPRINGS SPECIFICATIONS

Lift	Installed Height	Seat Force	Force @ Max Lift
.585"	1.85"	135 lb.	325 lb.



900-0594

STREET PERFORMANCE .585" SPRING KITS

Description	Part #
1999–'04 big twins (5⁄16" valve stems)	**900-0593**
2005–'17 big twins (7mm stems) *except 2017 touring models*	**900-0594**
All S&S Super Stock Heads	**900-0595**

VAVLE SPRING REPLACEMENT PARTS: SEE PAGE 222

FORGED ROCKER ARMS

FITMENT

- 1999–'17 big twins *(except '17 touring)*

FEATURES AND BENEFITS

ROLLER ROCKER ARMS

- Extremely durable rollers reduce valve stem side thrusting with high lift cams
- Superior wear and fatigue resistance even in the most demanding applications
- ¾" long bushings provide 50% more bushing support area than ½" long bushings

STANDARD ROCKER ARMS

- ¾" long bushings provide 50% more bushing support area than ½" long bushings

KIT CONTENTS

- 2 front and 2 rear rocker arms



900-4065A

FORGED ROLLER ROCKER ARM KIT

Description	Part #
2 front and 2 rear rocker arms	900-4065A

Adjustable pushrods must be used with S&S roller rocker arms to obtain proper valve clearance.
New rocker arm shafts are recommended for maximum performance and rocker life.



900-4119A

STANDARD FORGED ROCKER ARM KIT

Description	Part #
2 front and 2 rear rocker arms	900-4119A

New rocker arm shafts are recommended for maximum performance and rocker life.



900-4098A

1.725:1 RATIO ROLLER ROCKER ARMS

Description	Part #
1.725:1 Ratio Roller Rocker Arm Set	900-4098A
Front exhaust/Rear Intake *each*	900-4098FA
Rear exhaust/Front Intake *each*	900-4098RA

ROCKER ARM SHAFTS

Description	Part #
Set of 4 *17611-83B*	90-4036
Individual *17611-83B*	90-4006

New rocker arm shafts are recommended for maximum performance and rocker life.



90-4036



90-4104

REPLACEMENT PARTS FOR FORGED ROCKER ARMS

Rocker Arm Type	Description	Part #
Roller	Front exhaust or rear intake rocker arm	900-4065FA
	Rear exhaust or front intake rocker arm	900-4065RA
Standard *17375-83A*	Front exhaust or rear intake rocker arm	900-4119FA
	Rear exhaust or front intake rocker arm	900-4119RA
Roller	Rebuild kits (rebuilds 4 rocker arms)	90-4104
Roller & Standard	Rocker arm bushing (¾" long)	90-4014

NOTES

S&S roller rocker arms are recommended for use with cams having more than 0.585" of lift.
Adjustable pushrods must be used with S&S roller rocker arms to obtain proper valve clearance.
New rocker arm shafts are recommended for maximum performance and rocker life.
The use of 1.725:1 ratio rocker arms will increase stress on cams, tappets, and pushrods. For this reason they are recommended for racing only and not for street applications.

All reference to HD® part numbers is for identification purposes only. We in no way are implying that any of S&S Cycle's products are original equipment parts or that they are equivalent to the corresponding HD® part number shown.

CNC PORTED CYLINDER HEAD SERVICES

FITMENT

- Available for 1999–2017 big twin engines *(except Twin-Cooled™ models & '17 touring)*
- Ideal for 88"–24" engines (must use Screamin' Eagle® high flow injectors, HD® #27796-08, with kits over 106")

FEATURES AND BENEFITS

- CNC machined ports for a consistent performance increase from stock heads
- Great throttle response, high velocity port without losing low RPM torque
- Assembled with performance valves and springs ready to bolt-on
- Choice of .585" or .650" lift valve springs
- Combustion chambers are available in the following volumes:
  - 83cc—Generally used for stock 88" up to 106" engine displacements
  - 85cc—Same as stock Twin Cam 88® and 96™ engine displacements
  - 87cc—Recommended for up to 117" engine displacements
  - 90cc—Generally used for 124" and up engine displacements
- Available in factory black or silver

S&S CNC PORTING SERVICE OPTIONS

REWORK SERVICE

- Send your stock heads to S&S
- Get the same set of heads back with CNC machined ports
- The best option for heads with a special cosmetic treatment
- Allow 1 week turn-around (does not include shipping)

CUSTOM CNC PORT DUPLICATION

- S&S can digitize your port design and machine it in your heads, ask an S&S customer service rep for details



106-5880

WATCH THE S&S CNC PORTING VIDEOS AT SSCYCLE.COM/MEDIA/VIDEOS

CNC PORTING SERVICE

Fitment	Part #
1999–2017 big twins *(except for twin cooled models & '17 touring)*	**106-5880**

DISCLAIMER: NOT LEGAL FOR SALE OR USE IN CALIFORNIA ON ANY POLLUTION CONTROLLED MOTOR VEHICLE. NOT LEGAL FOR SALE OR USE NATIONWIDE ON ANY FEDERAL POLLUTION CONTROLLED MOTOR VEHICLE UNDER THE CLEAN AIR ACT

S&S® CNC PORTING SERVICE SPECIFICATION COMPARISON

Heads	Valve Size		Max Valve Lift	Max TDC Lift		Port Flow		Chamber Volume
	Intake	Exhaust		Intake	Exhaust	Intake	Exhaust	
Stock	1.805"	1.575"	.585"	–	–	216.2 cfm	191.8 cfm	85cc
CNC Ported by S&S	1.900"	1.610"	.650"	.230"	.215"	248.6 cfm	209.7 cfm	83cc**

**Flow testing performed on a SuperFlow® 1020 flow bench at 28" of water test pressure at .600" lift. Heads tested are 2006-'12 style.*

Heads	COMPRESSION RATIO								
	88"	95"	96"	97"	103"	106" Stroker	106" Big Bore	117" DD Piston	124" DD Piston
Stock	9.0:1	9.2:1	9.2:1	9.7:1	10.1:1	10.1:1	10.0:1	10.0:1	10.7:1
CNC Ported by S&S	9.2:1	9.4:1	9.4:1	9.9:1	10.3:1	10.3:1	10.2:1	10.2:1	10.9:1

***As a general rule of thumb, for every 1cc decrease in chamber volume equals a .1 increase in compression ratio.*

NOTES

CNC porting is not available for previously ported heads, heads that have been structurally damaged, or heads that are determined to be unserviceable during initial inspection. These heads will be returned to the customer without modification. In these cases, the customer will be notified and options will be reviewed. New, CNC ported stock heads or S&S heads are available for purchase.

Due to variations in stock cylinder head castings, all inside surfaces of the ports may not "clean up" during machining. As a result, the inside of one or more ports may not appear to be completely machined. This does not effect performance and is not considered a defect.

Fuel injection tuning required.

CNC porting is not currently available for Harley-Davidson® CVO engines or Screamin' Eagle® cylinder heads.

Must use Screamin' Eagle® high flow injectors, HD® #27796-08, with kits over 106"

S&S recommends using a S&S Throttle Hog throttle body when installing S&S CNC ported heads to achieve full horsepower performance potential.

B2 HEADS WITH STOCK BOLT PATTERN

CNC PORTED B2 SPECIAL APPLICATION CYLINDER HEADS

High performance just got a lot easier and more affordable. In the past, S&S' B2 Special Application heads, that were used on the now legendary Tribute 145 engines, were often hailed as the best choice for very large displacement v-twin engines. S&S Cycle's B2 CNC ported heads are even better, providing added convenience, economy, and performance at the same time. Convenient because they now fit 2008-later bagger front motor mounts and the new two bolt exhaust-mounting flange is a lot easier to work with. Economical because riders can use stock exhaust pipes, or existing 2" header systems. The increased performance comes from the increased flow of the CNC ported intake and exhaust ports.

Kits do not include gaskets, hardware, or intake and exhaust flanges. These parts must be purchased separately. See next page.

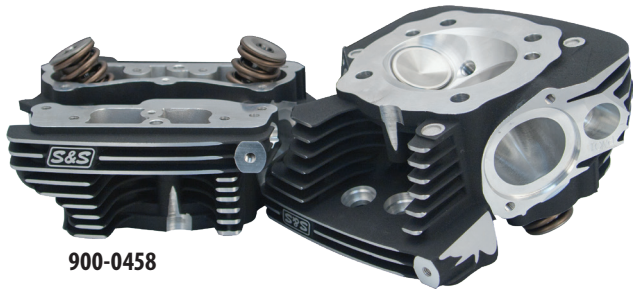

900-0458

FITMENT

- 1999–'16 big twin engines 4⅛" bore, stock bolt pattern (in stock, off-the-shelf*)
  **S&S only stocks the late model 4⅛" bore versions as off-the-shelf items, but heads for other applications and individual front of rear replacement heads are available by special order.*
- 1999–'16 big twin engines 4⅛" bore and larger with S&S or other bolt pattern *(special order only)*
- 1984–'99 big twin engines 4⅛" bore and larger *(special order only)*
- S&S SB-Series 4⅛" bore and larger engines for 1986–'03 Sportster® models *(special order only)*
- Old style B2 replacement heads still available by special order

FEATURES AND BENEFITS

- 106cc combustion chambers
- Oval intake ports bolt up to S&S Throttle Hog 70mm throttle bodies *(08–up touring applications only)*
- Stock style breather system—compatible with stock and aftermarket air cleaners
- Large 2.200" intake and 1.800" exhaust valves
- .660" lift S&S valve springs with titanium top collars
- Machined for stock sensors—EFI ready
- Available in Wrinkle Black or Silver powder coat

OPTIONS BY SPECIAL ORDER

- CNC ported intake and exhaust ports—more air, more power!
- Two-bolt exhaust flanges—Can accommodate stock exhaust headers, existing 2" headers, or build your own 2" exhaust system
- Machined for 2008–later bagger front motor mount
- Select heads for 1984–'99 or 1999–'15 big twin style, or 1986–'03 xl
- 4⅛" to 4⅜" bore sizes
- Stock 1999–up, S&S, or other cylinder stud patterns—other patterns subject to approval
- Machined with or without S&S electric compression release
- Choose from a variety of pushrod geometry machining styles
- Choose from a variety of different chamber sizes
- Individual front of rear heads available by special order
- Available in Wrinkle Black, Gloss Black, Silver, or Natural

B2 HEADS WITH STOCK BOLT PATTERN

Finish	Part #
Silver Powder Coat	**900-0450**
Wrinkle Black Powder Coat	**900-0458**
**Head Kits include valves and valve springs. Head sets w/o valves or springs individual front or rear heads are available by special order.*	
Special Order B2 Cylinder Heads	**106-6385***

**Download the Special Order Form at sscycle.com/soforms*

DISCLAIMER: NOT LEGAL FOR SALE OR USE IN CALIFORNIA ON ANY POLLUTION CONTROLLED MOTOR VEHICLE. NOT LEGAL FOR SALE OR USE NATIONWIDE ON ANY FEDERAL POLLUTION CONTROLLED MOTOR VEHICLE UNDER THE CLEAN AIR ACT

ADDITIONAL PARTS REQUIRED

Product Description		Part #
Special 4⅛" Bore Pistons & Ring Set	Standard	**92-1580**
	+.010"	**92-1581**
Special Length Pushrods (+.250")	For 124" engines	**93-5106**
	Stock height engines	**93-5098**
Intake Manifold Flange Kits	All B2 heads	**16-0250**

**Download the Special Order Form at sscycle.com/soforms*

REPLACEMENT PARTS: SEE PAGE218

NOTES

Heads are .230" taller than stock—requires special pushrods and/or frame clearancing or motor mount modifications

Exhaust pipe adaptor kits and other parts must be purchased separately. See "Additional Parts Required" chart.

SUPER STOCK® CYLINDER HEADS

FITMENT

- 1999–'05 big twins *(2006 model year heads can be found in Section 2)*

FEATURES AND BENEFITS

- Heads can be decked up to .060" to increase compression
- 79cc heads have 1.940" intake and 1.575" exhaust valves
- 89cc heads have 2.000" intake and 1.605" exhaust valves
- 91cc heads have 2.000" intake and 1.605" exhaust valves
- S&S .585" or .650" lift valve springs
- Stock Harley-Davidson® rocker boxes can be retained if S&S manual compression release or S&S Easy Start cams are used. Must use S&S valve cover gasket kit part #90-4120 with stock rocker covers
- Stock bolt pattern heads include rocker base gaskets

OPTIONS

- With or with out compression release machining
  (Compression release machining is for S&S compression releases)
- Silver powder coat or wrinkle black powder coat finish

COMPRESSION RATIOS FOR S&S® SUPER STOCK® CYLINDER HEADS FOR 1999–'06 BIG TWINS

Configuration	88"	95"	97" Big Bore	103"	106" Stroker	110"	111"	117"	124"
79cc	9.1	9.6/10.3*	10.3	10.2/11.1*	10.7	10.8	–	–	–
89cc	8.3	8.7/9.3*	9.4	9.3/10.1*	9.8	9.8	–	–	–
91cc	–	–	–	–	–	9.6	9.75	10.2	10.4

**S&S pop-up piston*

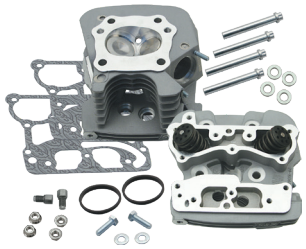

106-4277

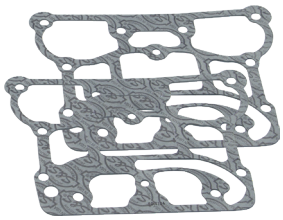

90-4120

S&S valve cover gasket kit # 90-4120 must be used with stock rocker covers. Included with Stock Bolt Pattern Super Stock® Head Kits.

STOCK BOLT PATTERN*

S&S® SUPER STOCK® CYLINDER HEAD KITS

Fitment	Chamber Volume	Manifold Surface	Compression Release Machining	Springs	Finish	Part #
1999–'05 bt	79cc		●	.650"	Silver	**106-4277**
				.585"		**900-0254**
			●	.650"	Wrinkle Black	**90-1293**
				.585"		**900-0251**
	89cc		●	.650"	Silver	**106-4270**
			●	.650"	Wrinkle Black	**90-1106**
				.585"	Wrinkle Black	**900-0410**
1999–'05 bt** 4⅛" Bore	91cc		●	.650"	Silver	-
				.650"		**900-4272**
			●	.650"	Wrinkle Black	**90-1163**
				.650"		**900-1163**
S&S T124 Engines	91cc	+.032		.650"	Silver	**900-0465**
				.650	Wrinkle Black	**900-0470**
S&S T111 Engines	91cc	-.064		.585"	Silver	**900-0475**
				.585"	Wrinkle Black	**900-0480**

**All stock bolt pattern Super Stock® head kits include S&S valve cover gasket kit part #90-4120 for use with stock rocker covers.*

DISCLAIMER: NOT LEGAL FOR SALE OR USE IN CALIFORNIA ON ANY POLLUTION CONTROLLED MOTOR VEHICLE. NOT LEGAL FOR SALE OR USE NATION-WIDE ON ANY FEDERAL POLLUTION CONTROLLED MOTOR VEHICLE UNDER THE CLEAN AIR ACT



S&S® BOLT PATTERN

S&S REPLACEMENT CYLINDER HEAD KITS FOR S&S T-SERIES ENGINES FOR 1999–'06 BIG TWINS

Description	Chamber Volume	Compression Release Machining	Springs	Finish	Part #
S&S® T-Series Engines 4⅛" Bore	91cc	●	.650" lift	Silver	**106-4275**
		●	.650" lift	Wrinkle Black	**90-1371**

ALL OTHER SPECIFICATIONS AND FINISHES ARE AVAILABLE THROUGH SPECIAL ORDER **90-1060***

**Special Order: Download the Special Order Form at sscycle.com/soforms*

TOP END GASKET KITS FOR 1999–'06 BIG TWINS

3⅜" & 3.927" Bore	4" Bore	S&S 4⅛" Bore (Graphite)	Stock 4⅛" Bore (Layered Steel)
910-0465	**90-1913**	**90-1910**	**90-1914**

Includes a set of head and base gaskets, exhaust gaskets and o-rings.

REPLACEMENT PARTS: SEE PAGE 220

NOTES

79cc heads

When 79cc stock compatible heads are used with stock HD® pistons, TDC lifts of up to .186" for intake and .179" for exhaust and can be used without additional valve pocket clearancing. This allows the use of S&S® 510, 570, and 585 camshafts. If cams with higher TDC lifts are used, or if the heads are decked, piston valve pocket machining will be required.

79cc heads may be decked as much as .060" to increase compression. If heads are decked, piston valve pockets must be re-machined.

Moderate valve spring force in S&S Super Stock® cylinder heads allows the use of camshafts designed for the stock style chain cam drive system. However, for maximum reliability and performance we recommend the S&S gear drive cams.

Must use S&S valve cover gasket kit part #90-4120 with stock rocker covers.

79cc Heads should not be used with any piston having a pop up dome.

89cc heads

If 89cc heads are used with stock pistons, valve reliefs must be machined in the pistons due to larger valve size.

89cc heads may be decked as much as .060" to increase compression. If heads are decked, valve-to-piston clearance must be checked. If stock pistons are used, valve pockets must be re-machined.

Moderate valve spring force in S&S® Super Stock® cylinder heads allows the use of camshafts designed for the stock style chain cam drive system. However, for maximum reliability and performance we recommend the S&S gear drive cams.

A larger intake manifold is recommended to supplement the heads in order to let them flow to their full potential.

Must use S&S valve cover gasket kit part #90-4120 with stock rocker covers.

91cc heads

By changing the profile and shape of the cooling fins on our heads for 4⅛" bore engines, a large reduction in the transmission of mechanical noise was found. This not only benefits our TÜV certified engines and our EPA approved engines, but our performance engines as well!

Since April 1, 2007, these redesigned heads have been installed on all S&S 4⅛" bore engines and Hot Set Up Kits.

Replacement heads of the old style are available by special order.

Must use S&S valve cover gasket kit part #90-4120 with stock rocker covers.

MANIFOLD RECOMMENDATIONS

S&S® manifolds for 1999-'06 carbureted engines are available to fit stock CV carburetors and S&S Super E and G carbs. Note that 2006 models require a slightly shorter manifold. (See "Important Manifold Information")

S&S single bore throttle body and manifold are recommended for engines with Magneti Marelli® and Delphi® fuel injection.

S&S single bore throttle body and manifold are recommended for 2006-'12, except 2008-'12 touring models. Due to the change in manifold flange mounting bolt pattern, stock flanges and S&S seal part #16-0235 must be used. The Screamin' Eagle® 58mm throttle body/manifold may also be used on 2006-'09 engines.

We recommend the stock 50 mm throttle body or Screamin' Eagle 58mm throttle body/manifold for 2008-up touring models with Electronic Throttle Control (ETC). These engines can be tuned with the Harley-Davidson® Super Tuner package, Pro EFI Super Tuner, Power Commander® or an aftermarket EFI tuning module or software tuner.

IMPORTANT MANIFOLD INFORMATION

In 2006, Harley-Davidson® changed the bolt pattern of the flanges that connect the manifold to the cylinder heads for all big twin engines. The pattern was changed from an offset bolt pattern to a symmetrical bolt pattern, so flanges can fit either the front or rear cylinder head. In addition, the intake port was moved slightly toward the drive side of the engine, making the port-to-port distance of the intake manifold slightly shorter. S&S® heads for 2006-up big twins are machined with the symmetrical bolt pattern and relocated port to allow for the fitment of stock manifolds.

In 2008, Harley-Davidson touring models were equipped with electronic throttle control (ETC). The throttle body and manifold used on these engines is a one-piece unit that contains a servomechanism to control the position of the throttle plate. S&S recommends the S&S Throttle Hog throttle body for this application. This limits the cylinder length of engines using an ETC manifold/throttle body to stock length because the ETC manifold/throttle body units are only available in stock length. However, S&S does supply specially machined cylinder heads tfor our 124" Hot Set Up Kit® for 2008 and later baggers, which allows the use of a stock length manifold on these longer-than-stock engines.

ORDERING NOTES:

- Select the cylinder head kit that is correct for your application.
- Select a gasket kit for the bore size of your engine. (Refer to "S&S Top End Gasket Kits" chart on page 192)
- Select an S&S manifold for your engine size or cylinder length and fuel system. *(Optional)*
- Select head bolt kit. (See page 194)

REPLACEMENT PARTS: SEE PAGE 220

HEAD BOLTS WITH WASHERS

HEAD BOLT-INFORMATION CHART

Length w/Washer	Washer Thickness	Head Bolt w/Washer	Washers Only
1.690"	.250"	**93-3028**	**50-7091**
1.840"	.150"	**93-3027**	**50-0418-S**
1.920"	.250"	**93-3036**	**50-7091**
2.070"	.150"	**93-3031** USA	**50-0418-S**
2.220"	.250"	**93-3038**	**50-7091**
2.370"	.150"	**93-3032**	**50-0418-S**
3.134"	.250"	**93-3029**	**50-7091**
3.284"	.150"	**93-3030** USA	**50-0418-S**
3.501"	.250"	**93-3037***	**50-7091**
3.651"	.150"	**93-3033***	**50-0418-S**

Drilled & tapped deeper to allow shortening for custom lengths.



HEAD BOLT WASHERS

Thickness	Part #
.150"	**50-0418-S**
.250"	**50-7091**

HEAD BOLTS FOR HARLEY-DAVIDSON® TWIN CAM 88® AND TWIN CAM 96™ ENGINES

Engine Displacement	Stroke	Cylinder Length	Cylinder Head	Short Bolt w/Washer	Long Bolt w/Washer	Head Bolt Kit
88", 95"	4"	4.935"	Stock HD®	**93-3031** USA	**93-3030** USA	**93-3014** USA
			S&S®	–	**93-3030** USA	**93-3070**
100"	4"	4.850"	Stock HD®	**93-3036**	**93-3030** USA	**93-3014** USA
			S&S®	–	**93-3029**	–
106" Stroker	4½"	4.935"	Stock HD®	**93-3031** USA	**93-3030** USA	**93-3014** USA
			S&S®	–	**93-3030** USA	**93-3070**
107"	4¼"	4.975"	Stock HD®	**93-3031** USA	**93-3037**	**93-3012**
			S&S®	–	**93-3030** USA	**93-3070**
111"	4⅛"	4.763"	Stock HD®	**93-3027**	**93-3030** USA	**93-3010** USA
			S&S®	–	**93-3029**	–
116"	4⅝"	5.160"	Stock HD®	**93-3038**	**93-3037**	**93-3016**
			S&S®	–	**93-3037**	**93-3071**
117"	4⅜"	4.888"	Stock HD®	**93-3031** USA	**93-3030** USA	**93-3014** USA
			S&S®	–	**93-3030** USA	**93-3070**
124"	4⅝"	5.013"	Stock HD®	**93-3038**	**93-3037**	**93-3016**
			S&S®	–	**93-3037**	**93-3071**

CALCULATING CUSTOM HEAD BOLT LENGTHS

SEE INSTRUCTIONS ON PAGE 345

S&S exclusive HEAD BOLT COVERS US PATENT PENDING



Dress up your engine with these magnetic chrome head bolt covers. Easy installation, no tools, no messy adhesives. A powerful magnet holds cover in place, yet allows easy removal. Chrome plated steel looks great on any engine, but is a must for polished engines. For S&S head bolts only.

CHROME HEAD BOLT COVERS

Set of 4	**50-0333**

⚠ WARNING: Cancer and Reproductive Harm – www.P65Warnings.ca.gov

DIE-CAST ROCKER COVERS

FITMENT

- All Twin Cam 88® big twins
- Sold as stock in 4⅛" bore S&S engines

FEATURES AND BENEFITS

- Special rocker arm supports are included
- S&S rocker covers are finished with show-quality chrome
- Installation on stock and most comparable sized engines can be performed without removing the engine from the frame
- Clearanced to permit valve lifts up to .640" using S&S valve spring packages and stock rocker arms or S&S roller rocker arms
- S&S rocker covers accept valve springs up to 1.660" O.D. without modification
- Exclusive one way valve built into the rocker cover gasket to control oil carry over

KIT CONTENTS

- Front and rear covers
- All necessary gaskets and o-rings
- Mounting hardware

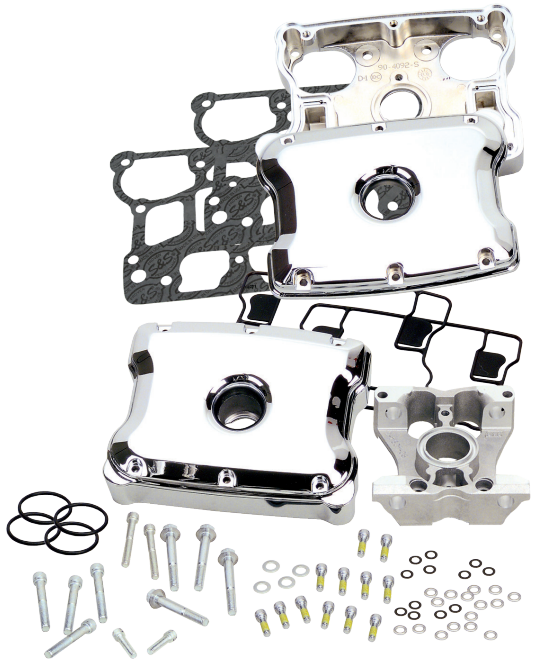

DIE-CAST ROCKER COVER KIT±

Description	Part #
NEW FOR 2020 Gloss Black	**900-0937**
Chrome USA	**90-4110**

± ⚠ WARNING: Cancer and Reproductive Harm – www.P65Warnings.ca.gov

ANY JOB IS EASY WITH THE RIGHT TOOLS
S&S ROCKER COVER WRENCH SET, SEE PAGE 325

REPLACEMENT PARTS: SEE PAGE 223

NOTES

If using valve spring packages with taller than stock installed height, some minor clearancing may be required.

Cylinder heads must be set up correctly for high lift cams, and it remains the builder's responsibility to confirm all clearances.

In most instances, only minor clearancing is required to use S&S rocker covers with valve springs larger than 1.660" O.D.

S&S® rocker covers are required if S&S cylinder heads are used with S&S electric compression releases.

MANIFOLDS FOR CARBURETED BIG TWIN ENGINES

FITMENT
- 1999–'06 big twins

FEATURES AND BENEFITS
- Fits stock or S&S heads
- Fits stock or engines with taller cylinders

NOTES

S&S manifolds require S&S style manifold o-rings.

S&S style o-rings must be used with these manifolds. S&S o-rings are slightly thinner to accommodate the larger S&S port diameter. Use of stock o-rings may cause damage. See page 211.



Manifold for S&S carburetors



Manifold for CV carburetor

MANIFOLDS FOR 1999–2005 BIG TWIN ENGINES (REQUIRING MAP SENSOR* MACHINING)

Engine Style and Displacement	Cylinder Length	Manifold Size	Super E	Super G
**88", 95" & 106" & S&S T-Series Engines	4.937"	410	**160-1718**	**16-2588**
Stock 2006 models	4.937"	405	**160-1717**	**16-2587**
**111" & S&S T-Series 111" Engines	4.763"	398	**160-4487**	**16-2604**
117" & S&S117" Hot Set Up Kits	4.888"	408	–	**16-2603**
**124" & S&S T-Series 124" Engines	5.013"	417	–	**16-2598**

**All S&S engines for 1984-'06 and 1999-up big twins equipped with S&S IST ignition system.*
***Some S&S heads have additional material on the manifold surface to allow the use of a stock length manifold (410) on a 99-06 111" and 124" engine. If you are not sure which manifold should be ordered, check fitment with the stock manifold first.*

CV MANIFOLDS — 1999–2005 BIG TWIN

Style/Displacement	(mm)	Manifold Size	Part #
88", 95", 106" Twin Cam 88	40-45mm	410	**160-1722**
96 stock	48mm	410	**160-0001A**
Special order	Specify	–	**169-1725A***

**Special Order: Download the Special Order Form at sscycle.com/soforms*

CV MANIFOLDS — 2006 & UP BIG TWIN

Style/Displacement	(mm)	Manifold Size	Part #
96 stock	40-45mm	405	**160-1721**
96 stock	48mm	405	**160-0002A**
Special order	Specify	–	**169-1725A**

**Special Order: Download the Special Order Form at sscycle.com/soforms*



16-0241



16-0242

U-RINGS FOR CONSTANT VELOCITY CARBS

Size	Part #
40-42mm	**16-0242** USA *27002-89*
44-48mm	**16-0241**



16-0136-S



50-8372

REPLACEMENT PARTS FOR MANIFOLDS

Description	Part #
Manifold Fitting VOES Rubber Cap 3⁄16" I.D. x 5⁄16" O.D. x 1⁄2"	**50-8372**
Manifold Vacuum Fitting	**16-0136-S**

MANIFOLDS FOR SINGLE BORE EFI BIG TWIN ENGINES

FITMENT
- Stock height or taller than stock 1999–'05 bt (see page 108 for 2006 models)
- S&S 52mm or 58mm throttle bodies
- Stock or S&S heads
- S&S T-Series Long Block engines

NOTE

S&S style o-rings must be used with these manifolds. S&S o-rings are slightly thinner to accommodate the larger S&S port diameter. Use of stock o-rings may cause damage.

MANIFOLDS FOR SINGLE BORE EFI 1999–'05 BIG TWINS

Engine Displacement	Cylinder Length	Manifold Size	Part #
**88", 95", 103", 106" & S&S T-Series Engines	4.937"	410	**16-5141**
124" Hot Set Up Kit *(w/stock or S&S heads w/stock manifold geometry)*	5.013"	417	**16-5139**
**S&S T-Series 111" Long Block engines	4.763"	398	**16-5136**
**S&S T-Series 124" Long Block engines	5.013"	417	**16-5139**

***Some S&S heads have additional material on the manifold surface to allow the use of a stock length manifold (410) on a 99-06 111" and 124" engine. If you are not sure which manifold should be ordered, check fitment with the stock manifold first.*



THROTTLE HOG CABLE OPERATED THROTTLE BODIES

S&S cable operated Throttle Hog Throttle bodies are available for 2002-'17 Harley-Davidson® big twins using cable operated throttles. Choose from 58mm, for stock or mildly built engines, or the whopping 66mm Throttle Hog for big inch engines. More Air, More Power!

FITMENT

- 2002–'05 Harley-Davidson EFI big twins with cable controlled throttles
- S&S EFI Hot Set Up Kit® installations and T-Series Long Block engines with cable controlled throttles

FEATURES & BENEFITS

- More air flow for improved performance
- S&S Stealth air cleaners kit, with the proper bore sizes, are available
- Works with all air cleaner kits designed for throttle by wire engines with stock breather system
- One-piece design for easy installation and stock appearance
- Compatible with stock sensors, fuel rail, and throttle cables
- Black powder coat finish matches stock
- Sealed, stainless steel throttle shaft with dual roller bearings for smooth operation and no air leaks
- Kit includes hardened steel flanges and seals
- No stock throttle body exchange required!

THROTTLE HOG CABLE OPERATED THROTTLE BODIES FOR 2002–2005 BT

Year	Size (mm)	Engine Fitment	Manifold Size	Part #
2002–2005 bt	58	97", 98" & S&S T-Series Engines**(Engines produced after 2013)	410	**170-0337**
		S&S T-Series 111" Engines**	398	**170-0339**
		S&S 117" Hot Set Up Kits	408	**170-0340**
		S&S T-Series 124" Engines**	417	**170-0338**
	66	97", 98" & S&S T-Series Engines**(Engines produced after 2013)	410	**170-0342**
		S&S T-Series 111" Engines**	398	**170-0344**
		S&S 117" Hot Set Up Kits	408	**170-0343**
		S&S T-Series 124" Engines**	417	**170-0341**

***Some S&S heads have additional material on the manifold surface to allow the use of a stock length manifold (405) on a 124" engine.*
If you are not sure which manifold should be rdered, check fitment with the stock manifold first.

Cylinder heads on T-Series long block engines are 1999-'05 style. Owners of 2006 models will need to purchase a set of 1999-'05 style, offset intake flanges such as S&S #106-3516.

DISCLAIMER: NOT LEGAL FOR SALE OR USE IN CALIFORNIA ON ANY POLLUTION CONTROLLED MOTOR VEHICLE. NOT LEGAL FOR SALE OR USE NATIONWIDE ON ANY FEDERAL POLLUTION CONTROLLED MOTOR VEHICLE UNDER THE CLEAN AIR ACT

MAKE MORE POWER!

S&S AIR CLEANER KITS

See Page 156

REPLACEMENT FLANGE KITS

2002–2005 bt.....**160-0175** *$85.95*



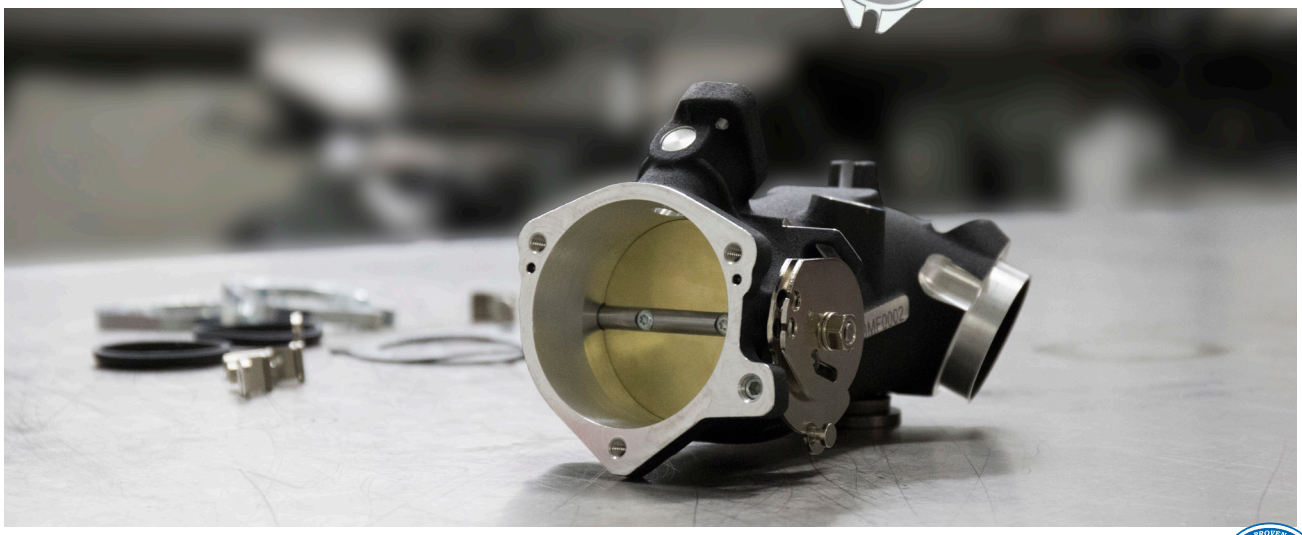

SINGLE BORE EFI THROTTLE BODIES

52MM: Offering a 30% larger cross sectional area than stock throttle bodies, the S&S 52mm bore throttle body flows more than enough air for all but the most demanding street engines.

58MM: In response to constant requests for something bigger, S&S also offers a huge 58mm bore throttle body! Strictly for large displacement competition engines, this throttle body allows your engine to breathe easily and make more power!

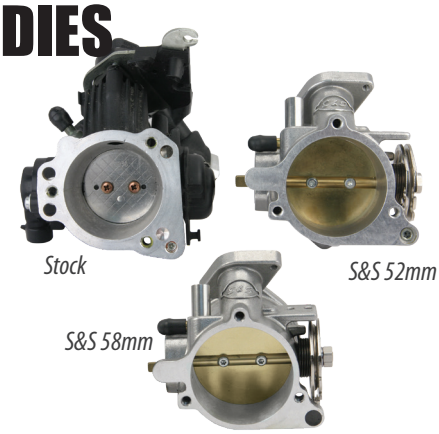

Seeing is believing. It's easy to see the differences in the bore sizes of a stock Harley-Davidson® throttle body and the S&S® 52mm or 58mm throttle bodies. How big do you want to go?

FITMENT

- 1999–'16 big twins *(except 2008-up touring models with electronic throttle control)*

FEATURES AND BENEFITS

- Excellent performance
- Recommended tuning products:
  - S&S VFI
  - Cruise control compatible with no extra bracket

KIT CONTENTS

- Throttle body assembly, Fuel injectors, Fuel rail, Harness adaptors, All necessary hardware, gaskets, and hoses

REPLACEMENT PARTS: SEE PAGE 234

NEW & IMPROVED!

CABLE-OPERATED THROTTLE HOGS PAGE 197

MAKE MORE POWER!

S&S® STEALTH AIR CLEANERS ON PAGE 156

S&S AIR CLEANER KITS FOR ON PAGE 159



106-4408

SINGLE BORE EFI THROTTLE BODY/FUEL RAIL KITS

Fitment	52mm	58mm
2002–'05 EFI big twin & 2001 Softail models	**17-5067**	**106-4407**
2006–'16 EFI big twin*	**17-5070**	**106-4408**

**except 2008–up touring models with electronic throttle control.*

DISCLAIMER: NOT LEGAL FOR SALE OR USE IN CALIFORNIA ON ANY POLLUTION CONTROLLED MOTOR VEHICLE. NOT LEGAL FOR SALE OR USE NATIONWIDE ON ANY FEDERAL POLLUTION CONTROLLED MOTOR VEHICLE UNDER THE CLEAN AIR ACT

If you plan to use another programmable fuel injection module, it is best to consult the manufacturer to be certain that it is compatible with the S&S single bore system and has enough tuning capability for your engine configuration.

Installation of S&S throttle body on 1995–'01 bikes requires S&S ECU. Single bore throttle bodies are not compatible with stock Magneti Marelli® ECU

BLACK SUPER E & G CARBURETORS

FEATURES AND BENEFITS

- Exclusive black coating — heat and chemical resistant
- Offered in standard venturi or increased venturi diameter — specially machined for 7% more flow



BLACK CARBURETORS FOR 1984–2005 BIG TWINS

Fitment	Description	Part #
Increased venturi diameter *(7% more flow)*	Super E Carb	**110-0099**
	Super G Carb	**110-0100**
Standard venturi diameter	Super E Carb	**110-0133**
	Super G Carb	**110-0138**

DISCLAIMER: NOT LEGAL FOR SALE OR USE IN CALIFORNIA ON ANY POLLUTION CONTROLLED MOTOR VEHICLE. NOT LEGAL FOR SALE OR USE NATIONWIDE ON ANY FEDERAL POLLUTION CONTROLLED MOTOR VEHICLE UNDER THE CLEAN AIR ACT

NOTES

These black carb kits do not include air cleaners.
Air cleaner options are available starting on page 156.

Manifolds are required. See page 196.

SUPER E & G COMPLETE CARBURETOR KITS

FITMENT

- 1999–'06 Twin Cam 88® engines
- S&S carbureted engines
- Custom v-twin applications

FEATURES AND BENEFITS

- Four fuel delivery ports — Better throttle response
- O-ring sealed idle mixture screw
- Increased air flow for more power
- Adjustable accelerator pump for quick throttle response and easy starting
- Utilization of the factory dual cable system ensures safe operation
- Direct replacement and high quality fit and finish — less down time and better performance
- Variable position enrichment starting system

KIT CONTENTS

- Super E or G carburetor
- S&S intake manifold
- Classic Teardrop air cleaner kit
- Mounting hardware
- Gaskets, seals and hoses
- Instructions



11-0450

SUPER E & G COMPLETE CARBURETOR KITS

Fitment	Super E	Super G
1999–'05 big twin	**11-0450**	**11-0451**
2006 big twin	**106-0874**	**106-0875**

SUPER E & G CARBURETOR ONLY

Fitment	Super E	Super G
All Years & Models	**11-0420**	**11-0421**

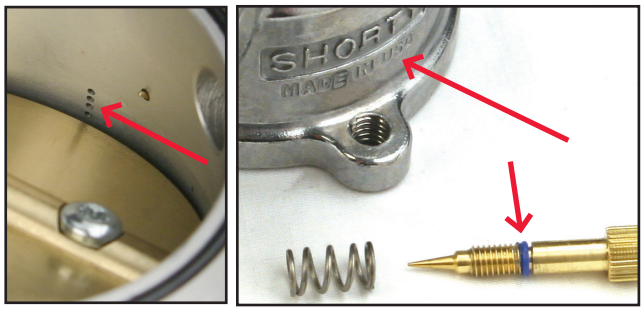

As the throttle plate opens, it exposes more of these holes to engine vacuum and delivers more fuel as rpm increases. This o-ring around the idle mixture screw not only eliminates potential air leaks, but helps keep the screw from vibrating out of adjustment. "Made in USA" cast into carb body identifies this as a new style carb.

REPLACEMENT PARTS: SEE PAGE 230

NOTES

S&S® does not recommend polishing or chrome plating Super E & G carbs. Our repair department has seen many carbs with plugged passages due to polishing compounds, and some carbs that have been destroyed because the polishing or chrome plating had altered critical machined surfaces.

Recommended for closed circuit use only—S&S Super E & G carbs shown are not approved for use on motor vehicles operated on California public highways, or in other states where similar pollution laws may apply. The user shall determine the suitability of the product for his or her use and shall assume all risk and liability in connection therewith.

DISCLAIMER: NOT LEGAL FOR SALE OR USE IN CALIFORNIA ON ANY POLLUTION CONTROLLED MOTOR VEHICLE. NOT LEGAL FOR SALE OR USE NATIONWIDE ON ANY FEDERAL POLLUTION CONTROLLED MOTOR VEHICLE UNDER THE CLEAN AIR ACT



OPTION

Optional cruise control adapter kits allows riders to keep factory cruise feature on 1999–'06 models

CRUISE CONTROL ADAPTER KIT

Fitment	Part #
1999–'06 bt	**11-2927**

TWO CABLE THROTTLE ASSEMBLIES

The S&S two cable throttle assemblies are high quality "pull open – pull close" type throttles designed for use on any two cable carburetor installations on bikes with 1" O.D. handlebars. A special soft plastic material used to mold the grips makes them look and feel exactly like stock grips. There are four different assemblies available to make installation on most chassis easy.

TWO CABLE THROTTLE REQUIRED

S&S Super E and G carburetors require the use of a two cable, pull open–pull closed throttle assembly. Any chassis including 1980 and earlier stock models equipped with a single cable throttle mechanism requires conversion to a two cable, pull open–pull closed type. S&S offers high quality two cable throttle assemblies for this purpose. Stock big twin models from 1981 to present have a two cable throttle and should not require changing. Super E and G Carb kits for 1990 and later models come with the new longer throttle cable guide bracket which allows the use of the stock CV style throttle cables.



19-0440

NOTE

The chart on this page is used only when using throttle cable bracket part #11-2339. This bracket is standard on all S&S Super E & G carburetor kits for big twins 1989 and earlier and all kits for Harley-Davidson® Sportster® models with the exception of the kit for 2004-'05 models. Carburetor kits for 1990 and later big twin models come with the longer cable bracket part #11-2338 for use with stock CV throttle cables. Super E and G carburetors ordered for big twin models 1981 and later are being shipped with the correct throttle cable bracket to fit the stock cables. Big twin carbs that are not year specific will be shipped with both cable brackets. All Sportster models 1988-'03 will still require conversion to butterfly style cables.

THROTTLE CABLE APPLICATION CHART

Application	Fastening Method	Length Total Housing	Length Vinyl Housing	Open Side	Close Side
1996–Up Softail®I (FXSTS, FXSTC, FLSTC, FLSTF) 1996–Up Dyna®	Snap-in	39"	35"	**19-0438**	**19-0439**
1996–Up All FLT models	Snap-in	48"	44"	**19-0464**	**19-0465**
1996–Up custom application	Snap-in	42"	38"	**19-0440**	**19-0441**

**1998 and later required Harley-Davidson® throttle assembly #71831-96*

***1980 and earlier must be converted to dual cable throttle assembly.*

REPLACEMENT PARTS

Description	Part #
S&S Universal Throttle Cable	**106-3520**
Throttle Grip Clamp Set 1985–'95	**106-3519**
Top Throttle Grip Clamp only	**19-0222**
Bottom Throttle Grip Clamp only	**19-0220**
Throttle Grip Clamp Screw *(Fits S&S throttle assemblies: Part #19-0448, #19-0449, #19-0482, #19-0450, , #19-0229)*	**50-0043**
Throttle Grip Set	**106-3521**
Right Hand Grip only	**19-0225**
Left Hand Grip only	**19-0226**
Cable Adjuster *(Fits S&S throttle assembly part #19-0229)*	**19-0223**
Cable Adjuster Jam Nut *(Fits S&S throttle assembly part #19-0229)*	**19-0227**
Handlebar Spacing Sleeve 4" x 1" O.D.—converts ⅞" handlebars to 1" O.D.	**19-0235**



JETS & CARB REBUILD KITS
FOR S&S SUPER E & G CARBURETORS

For those who need to rejet their carburetor because of engine modifications, exhaust modifications, or changes in altitude, we have extra jet kits available which are designed to cover most jetting situations.

DEALER JET KITS±

Description	Part #
S&S Carb Parts Kit *(Contains needed parts to maintain S&S Super E and G carburetors)*	**11-3103**
S&S Jet Kit *(Includes 3 each of all intermediate jets and 5 each of all main jets, plus a main jet tool)*	**11-3102**

±⚠WARNING: Cancer and Reproductive Harm – www.P65Warnings.ca.gov



11-3103

JET PACKS±

Description	Part #
Low Range Jet Pack – For jetting most stock and moderate performance engines.	
Includes one each intermediate jets (.025", .0265", .028", .0295") one each main jets (.062", .064", .066", .068", .070", .072", .074").	**11-7270**
High Range Jet Pack – For jetting some stock and all performance engines.	
Includes one each intermediate jets (.0295", .031", .032", .033") and one each main jets (.072", .074", .076", .078", .080", .082", .084").	**11-7271**
Master Jet Pack – For jetting all Super B, E, and G equipped engines.	
Includes one each intermediate jets (.025", .0265", .028", .0295", .031", .032", .033") and one each main jets (.062", .064", .066", .068", .070", .072", .074", .076", .078", .080", .082", .084").	**11-7272**

±⚠WARNING: Cancer and Reproductive Harm – www.P65Warnings.ca.gov



11-3102±



11-7272±

INTERMEDIATE JETS - SERIES #94 INDIVIDUAL SELECTION±

Size	QTY	Part #	Size	QTY	Part #
.025	each	**11-0250**	.032	each	**11-0320**
	3 pack	**11-7107**		3 pack	**11-7112**
.0265	each	**11-0265**	.033	each	**11-0330**
	3 pack	**11-7108**		3 pack	**11-7113**
.028	each	**11-0280**	.036	each	**11-0360**
	3 pack	**11-7109**		3 pack	**11-7114**
.0295	each	**11-0295**	.040	each	**11-0400**
	3 pack	**11-7110**		3 pack	**11-7115**
.031	each	**11-0310**	Blank	each	**11-0000**
	3 pack	**11-7111**			

±⚠WARNING: Cancer and Reproductive Harm – www.P65Warnings.ca.gov



106-3517±

Early Series #94 gas jets were stamped with single digit numbers. Conversions for these numbers are:

1.....025"
2.....028"
3.....031"
4.....033"
5.....036"
6.....040"

NOTES

No returns or exchanges on jets.

MAIN JETS - SERIES #72 INDIVIDUAL SIZE SELECTION±

Size	QTY	Part #	Size	QTY	Part #
.040	each	11-4040	.080	each	11-4080
	5 pack	11-7220		5 pack	11-7240
.042	each	11-4042	.082	each	11-4082
	5 pack	11-7221		5 pack	11-7241
.044	each	11-4044	.084	each	11-4084
	5 pack	11-7222		5 pack	11-7242
.046	each	11-4046	.086	each	11-4086
	5 pack	11-7223		5 pack	11-7243
.048	each	11-4048	.088	each	11-4088
	5 pack	11-7224		5 pack	11-7244
.050	each	11-4050	.090	each	11-4090
	5 pack	11-7225		5 pack	11-7245
.052	each	11-4052	.092	each	11-4092
	5 pack	11-7226		5 pack	11-7246
.054	each	11-4054	.094	each	11-4094
	5 pack	11-7227		5 pack	11-7247
.056	each	11-4056	.096	each	11-4096
	5 pack	11-7228		5 pack	11-7248
.058	each	11-4058	.098	each	11-4098
	5 pack	11-7229		5 pack	11-7249
.060	each	11-4060	.100	each	11-4100
	5 pack	11-7230		5 pack	11-7250
.062	each	11-4062	.102	each	11-4102
	5 pack	11-7231		5 pack	11-7251
.064	each	11-4064	.104	each	11-4104
	5 pack	11-7232		5 pack	11-7252
.066	each	11-4066	.106	each	11-4106
.070	each	11-4070	.110	each	11-4110
	5 pack	11-7235		5 pack	11-7255
.072	each	11-4072	.115	each	11-4115
	5 pack	11-7236		5 pack	11-7256
.074	each	11-4074	.120	each	11-4120
	5 pack	11-7237		5 pack	11-7257
.076	each	11-4076			
	5 pack	11-7238			
.078	each	11-4078			
	5 pack	11-7239			

± ⚠ WARNING: Cancer and Reproductive Harm – www.P65Warnings.ca.gov

MAIN JET AIR BLEED KIT± (One Jet Each Size)

Sizes	Part #
.042" - .060"	106-3517
.084" - .120"	106-3518

± ⚠ WARNING: Cancer and Reproductive Harm – www.P65Warnings.ca.gov

S&S® CARBURETOR REBUILD KITS

To insure that you continue to get the utmost in performance from your S&S carburetor, we have put together a series of rebuild kits that are designed to provide the proper parts to return a worn carburetor to top shape. We have assembled different types of kits to cover the different degrees of rebuild necessary.

MASTER REBUILD KITS

Master rebuild kits contain a body rebuild kit, accelerator pump rebuild kit (Super E and G only), all new fasteners, springs, idle mixture screw, seat, and needle assembly. Everything needed to completely rebuild one carburetor.

MASTER REBUILD KIT±

Description	Part #
Super E	11-2923
Super G	11-2924

± ⚠ WARNING: Cancer and Reproductive Harm – www.P65Warnings.ca.gov

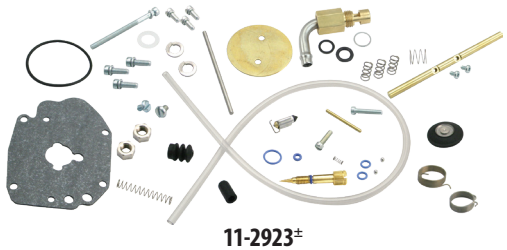

11-2923±

BODY REBUILD KITS

Body rebuild kits for Super E and G carbs also contain throttle shaft nuts, nylon washers, accelerator pump o-ring, and accelerator pump boot. Body rebuild kits for Super E and G carbs do not contain throttle shaft bushings since these carbs have stainless steel throttle shaft bushings already installed.

BODY REBUILD KIT±

Description	Part #
Super E	11-2906
Super G	11-2907

± ⚠ WARNING: Cancer and Reproductive Harm – www.P65Warnings.ca.gov



11-2907

BASIC REBUILD KIT

A gasket and seal kit for low mileage Super E & G carbs. Perfect to reassemble carbs taken apart for inspection and cleaning.

BASIC REBUILD KIT±

Description	Part #
Super E & G	110-0067

± ⚠ WARNING: Cancer and Reproductive Harm – www.P65Warnings.ca.gov

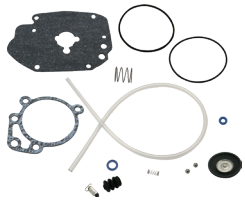

ACCELERATOR PUMP REBUILD KITS

Accelerator pump rebuild kits contain diaphragm, diaphragm spring, check balls, check ball spring, pump pushrod, and required hardware and o-rings.

ACCELERATOR PUMP REBUILD KIT

Description	Part #
Super E & G	11-2918



UNIVERSAL WIRING HARNESS
FOR CUSTOM BIKES AND RACING APPLICATIONS

FITMENT

- Custom and racing v-twin applications using Delphi® style EFI module
- Easy replacement for engine sub harness on 2002 through 2005 FL models
- 1995-'05 big twins – Useful for carb to Delphi EFI and Magneti Marelli® to Delphi EFI conversions
- Great for S&S X-Wedge® engines

FEATURES AND BENEFITS

- Simple electrical hook up of all connections required to operate engines with Delphi® style EFI
- All cables are terminated with the correct factory crimped connectors
- Works the S&S, stock and most 36 pin aftermarket Delphi style EFI modules
- Compatible with S&S throttle bodies, as wel l as stock and most aftermarket throttle bodies
- Replaces stock engine sub-harness in 2002-'05 FL models, simplifies carb to EFI conversions



UNIVERSAL WIRING HARNESS

Description	Part #
For Custom and Racing Applications	**550-0264**

COMPRESSION RELEASES

FITMENT

- S&S cylinder heads for big twin

OPTIONS

MANUAL RELEASE:

Activated by a cable similar to a choke control, this slick system can be used with any style rocker cover.

ELECTRIC RELEASE:

Solenoid operated, this system automatically opens and closes when the starter button is pressed and released. Convenient and simple, this is the best setup for big displacement high compression bikes. Requires S&S die cast rocker covers.



COMPRESSION RELEASE KITS

Description	Part #
Electric	**90-4915**

TOOLS AND ACCESSORIES

Description	Part #
S&S Two-Piece Socket Kit: *Allows in-frame installation of S&S compression releases and protects wiring from damage during installation.*	**53-0045**
S&S Compression Release Hole Plug	**90-4916**

REPLACEMENT PARTS

Description	Part #
Silicone Solenoid Caps	**55-1009**
Wiring Harness USA 2,3	**55-1010**
Electric Compression Release Assembly USA 2,3	**90-4914**

NOTES

S&S rocker covers must be used with electric compression releases due to clearance requirements for the solenoids.

Rocker covers must be removed when installing S&S® compression releases. If lack of frame clearance prevents removal of rocker covers, engine must be removed from frame for compression release installation.

In most cases, S&S compression releases can be installed while the engine is in the frame with the special S&S two-piece socket kit, part #53-0045 .

If cylinder heads are machined for S&S compression releases, but compression releases are not used, special plug part #90-4916 *(two required)* must be installed to seal the machined hole.

Stock cylinder heads cannot be machined for S&S compression releases because there is not enough material in critical areas.

VARIABLE FUEL INJECTION MODULES (VFI)

FEATURES AND BENEFITS

- Directly replaces stock Harley-Davidson® fuel injection modules – plugs directly into stock wiring harness
- Includes ProTune II software and can be updated at sscycle.com/tech-info/software/protune-ii
- Three stage engine overheat protection helps prevent possible engine damage caused by improper modifications to fuel maps
- Altitude compensation automatically adjusts for altitude variations
- Live tuning allows manual changes to maps while the engine is running
- Self diagnostics and actuator test functions help tuning and verify proper installation/operation
- Engine light can be programmed to function as a shift light
- Closed loop capable
- Knock sensing ignition control *(USB Delphi® style unit only)*
- Optional closed loop sensor kit extend module capabilities
- Speedometer calibration function for 2004-up Harley-Davidson® models (*does not require installation of separate speedometer calibrator)*

CLOSED LOOP CAPABILITY

When equipped with a dual closed loop sensor kit and running in closed loop mode, VFI tuning becomes a breeze! S&S supplies base maps for several displacement groups, creating a starting point to get bikes up and running. Utilizing dual oxygen sensors *(sold separately)* placed in the exhaust, the S&S closed loop system modifies the base fuel map to meet the specific requirements of your engine!

- Automatic tuning on the street or on the dyno
- Each cylinder is tuned individually
- Fuel map changes are saved in the module and can be merged with the pre-loaded base map
- Works with stock oxygen sensors used on late model Harley-Davidson® motorcycles

Closed loop VFI can also automatically compensate fuel delivery for modifications creating up to a 20 hp gain, such as changes in:

- Displacement
- Cams
- Exhaust
- Head porting or installation of aftermarket heads

DELPHI® STYLE S&S VFI MODULE

FITMENT

- Delphi® ECU equipped big twins

KIT CONTENTS

- Delphi® style S&S VFI module
- ProTune II software
- USB port cover kit (part #55-5090 only)
- Installation instructions

NOTES

The Barometric Sensor Relocation kit *(part #55-1599)* is required for any complete S&S T-series engine installed in a 1995–2001 EFI touring chassis or any engine used in these applications using the S&S T-series oil pump where the stock cam position sensor cannot be used.

All current production S&S modules are closed loop compatible, and all older S&S modules can be updated with current calibration by simply downloading software from the S&S website at sscycle.com/tech-info/software/protune-ii

Please note that maps created for older versions of the VFI software are not compatible with the new closed loop software, however they can be converted to closed loop if desired.

S&S VFI systems installed on 2004–up Harley-Davidson® models incorporate a speedometer calibration feature.



55-5090

DELPHI® STYLE S&S VFI MODULE

Fitment/Description	Part #
VFI Module for 2001–'11 bt *(except 2008-up touring and 2011 Softail®)*	**55-5090***
S&S Delphi Style VFI Closed Loop Sensor Kit USA	**106-2066**

**Special Order: Download the special order form at sscycle.com/soforms*

DISCLAIMER: NOT LEGAL FOR SALE OR USE IN CALIFORNIA ON ANY POLLUTION CONTROLLED MOTOR VEHICLE. NOT LEGAL FOR SALE OR USE NATIONWIDE ON ANY FEDERAL POLLUTION CONTROLLED MOTOR VEHICLE UNDER THE CLEAN AIR ACT

NOTE

Due to the extreme range of control offered by the S&S VFI modules, we recommend that they be installed and tuned by S&S Certified VFI Tuning Centers. Check www.sscycle.com to find a tuning center near you.

REPLACEMENT PARTS FOR S&S® VFI MODULES

REPLACEMENT PARTS FOR S&S® VFI MODULES

Description		Part #
S&S VFI Closed Loop Sensor Kit	Delphi® Style USA	106-2066
Service Kit, O_2 Sensor USA		106-2061
Service Kit, DTM Pin		55-1521
Service Kit, Oxygen Sensor Boss USA		55-6071-S
Service Kit, Subharness	Delphi® Style	55-1595
Barometric Sensor Relocation Kit *(See Notes)*		55-1599*
Hardware Kit (USB Cover) *(for 550-0001 & 55-5090 modules)*		55-5091

*DISCLAIMER: NOT LEGAL FOR SALE OR USE IN CALIFORNIA ON ANY POLLUTION CONTROLLED MOTOR VEHICLE. NOT LEGAL FOR SALE OR USE NATIONWIDE ON ANY FEDERAL POLLUTION CONTROLLED MOTOR VEHICLE UNDER THE CLEAN AIR ACT



106-2066

HIGH OUTPUT COILS

HIGH OUTPUT COILS

S&S High Output 3.0Ω Single Fire Coil *The perfect complement for S&S IST ignition systems. This single fire coil is actually two separate coils in a single package. Coil impedance is 3Ω per coil.*	55-1571
S&S High Output 0.5Ω Single Fire Coil USA *High output 0.5Ω single fire coil for S&S IST ignition.*	55-1576



55-1571



55-1576

TRANSMISSION TOP COVER

CHROME TRANSMISSION TOP COVER±

Description	Part #
Billet for 1999–'05 Dyna® Models	106-3886

This cover is required for proper oil line connection in 1999-'05 Dyna models when installing an S&S T124 engine or when installing S&S replacement crankcases. This top cover may also be used as stock replacement for 1999–'05 Dyna models.

± WARNING: Cancer and Reproductive Harm – www.P65Warnings.ca.gov

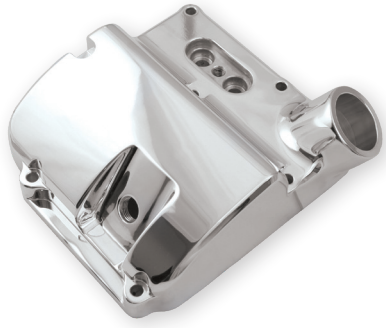

INNER PRIMARY BEARING RACE

FITMENT

- All 1991–'06 big twins *(except '06 Dyna®)*



FEATURES AND BENEFITS

- Will not "walk" on transmission mainshaft
- Simple to install
- Prevents costly damage to mainshaft seal, output gear & output gear bearing

INNER PRIMARY BEARING RACE

Fitment	Part #
All 1991–'06 big twins *(except '06 Dyna®)*	56-5089 USA

ANY JOB IS EASY WITH THE RIGHT TOOLS: S&S INNER BEARING RACE PULLER, SEE PAGE 324

VARIABLE PRESSURE CLUTCH

The VP clutch is the most cost effective kit for upgrading your HD® stock clutch without any modifications. Up to 40% more pressure for stronger clutch engagement.

FEATURES AND BENEFITS

- Works like a lock up clutch
- Increased torque capacity: strength of engagement increases with RPM
- 10 minute installation
- Fits behind a stock derby cover and primary cove—No modification required
- Can be used with cable and hydraulic clutch controls

Does not fit: 2013 and later CVO™ and Tri Glide®, 2015 and later Ultra Limited Low and Electra Glide Classic Low Models with new HD® Assist and Slipper Clutch: 3 Stud Clutch Hub

Non-stock derby cover (including any special or 2003 anniversary cover) and 3 hole derby covers may require a derby



560-0242

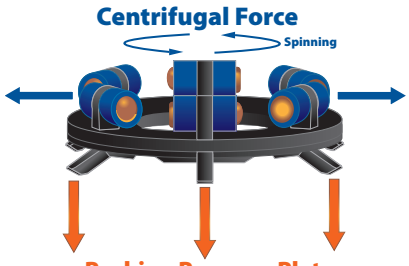

Centrifugal force makes more clamping force. Regular clutches have static pressure only with clutch springs. The Lock up clutch has two different types of pressure. One is a Static Pressure, and another is a Centrifugal Force by Lock-up as an additional pressure.

VARIABLE PRESSURE CLUTCH

Description	Part #
1998–up big twins with 6 Stud Clutch Hub	**560-0242**

HEAVY DUTY DIAPHRAGM SPRING

FITMENT

- 1998–up big twin models

FEATURES AND BENEFITS

- 380 lbs pressure, 25% stronger than stock
- Same pressure as Screamin' Eagle® heavy-duty spring
- Compatible with S&S VP and stock clutches

HEAVY DUTY DIAPHRAGM SPRING

Description	Part #
1998–up big twins	**560-0244**



560-0244

GATES® HIGH STRENGTH FINAL DRIVE BELTS

S&S final drive belts by Gates are available with 14mm pitch in 1½" and 1⅛" widths. See the chart and match the width and number of teeth required for your vehicle. You can find this information in the vehicle service manual.



SECONDARY DRIVE BELTS (14MM PITCH)

Teeth	1⅛" Wide	1½" Wide
125	**106-0357**	–
126	–	**106-0348**
127	–	**106-0349**
128	**106-0358**	**106-0350**
130	**106-0359**	**106-0351**
132	**106-0360**	**106-0352**
133	**106-0361**	**106-0353**
135	**106-0362**	**106-0354**
136	–	**106-0355**
139	**106-0363**	**106-0356**
149	**106-1338**	**106-2695**
156	–	**106-2827**

ATTENTION CUSTOM BIKE MANUFACTURERS!

SPECIAL ORDER BELTS FROM S&S® AND GATES®

Special belt sizes, private brand labeling, and assistance with belt drive design, are available to custom performance OEM's and aftermarket bike builders, through S&S. These products and services are available for licensed motorcycle manufacturers only, and a minimum order quantity may be required.

Drive belts with your company name imprinted on them are a perfect way to show off your brand. Any belt size currently available in the S&S catalog, as well as the special ordered sizes, can be specially branded. Minimum order quantities would apply.

Whether you're designing a completely new chassis, or simply need a replacement belt, S&S can help you find the belt you're looking for. Through the combined efforts of Gates and S&S, S&S can now provide customers with the technical assistance they need for designing new secondary belt drive systems. In addition, S&S can help you determine required tooth count for your existing chassis design, based on the pulley center-to-center distances and pulley tooth counts.

All belts have a 14mm tooth pitch, and are made of the super strong Gates Carbon X3N material. Belts are available in three standard widths of 1.125", 1.5"and 1.181" (30mm), but can be special ordered in nearly any width for a nominal charge. If you want a belt with a special tooth count, they are also available *(see the special order chart for availability)*.

Contact your S&S Customer Support Representative for more information.

BELTS AVAILABLE BY SPECIAL ORDER (14MM PITCH)

Tooth Count	1.181" (30mm) Width*	1.25" Width*
125	●	
126	●	●
127	●	●
128	●	
130	●	
131	●	●
132	●	
133	●	
135	●	
136	●	●
137	●	●
139	●	
140	●	●
149	●	
150	●	●
151	●	●
152	●	●
156	●	

**Minimum order required: 1.181" (30mm) – 16 belts; 1.25" – 17 belts.*

GASKETS

REBUILD GASKET KITS FOR S&S® T-SERIES 1999–UP ENGINES AND HOT SET UP KIT®

1999–'06, 4⅛", S&S base bolt pattern	**106-0976**
1999–'15, 4⅛", Stock base bolt pattern	**310-0335**
1999–up T143 4.425" bore	**310-0751**

TOP END GASKET KIT FOR TWIN CAM 88® AND S&S ENGINES

3⅞" Stock Bolt Pattern	**90-9504**
4⅜"	**90-9511**
4⅛", with S&S® bolt pattern	**90-9506**
4⅛", with Stock Cases	**90-9510**
4"	**90-9505**

CYLINDER HEAD GASKET KITS T-SERIES 1999–UP

4⅜" bore	**900-0800**
4⅛", with S&S® bolt pattern	**90-1910**
4⅛", with Stock bolt pattern	**90-1914**
4" with Stock bolt pattern	**90-1913**
3⅞" & 3.927"	**910-0465***

*DISCLAIMER: NOT LEGAL FOR SALE OR USE IN CALIFORNIA ON ANY POLLUTION CONTROLLED MOTOR VEHICLE. NOT LEGAL FOR SALE OR USE NATIONWIDE ON ANY FEDERAL POLLUTION CONTROLLED MOTOR VEHICLE UNDER THE CLEAN AIR ACT

HEAD GASKETS T-SERIES 1999–UP

4⅞16"	.045"	Layered Steel	*2 pack*	**900-0762**
4⅜"	.045"	Copper	*2 pack*	**93-1081**
4⅛"	.043"	Graphite	*each*	**93-1047-S**
			10 pack	**93-1073**
4⅛" Stock Bolt Pattern	.043"	Layered Steel	*each*	**93-1091-S**
			2 pack	**930-0102**
4⅛" Stock Bolt Pattern	.030	Layered Steel	*2 pack*	**900-0217**
4"	.043"	Graphite	*each*	**93-1043-S**
4" Stock Bolt Pattern	0.45"	Layered Steel	*2 pack*	**900-0822**
4" Stock Bolt Pattern	.030"	Layered Steel	*2 pack*	**900-0821***
3⅞" & 3.937"	.045"	Layered Steel	*2 pack*	**900-0862**
3¾" *16775-99B*	.043"	Graphite	*each*	**93-1045-S**

*DISCLAIMER: NOT LEGAL FOR SALE OR USE IN CALIFORNIA ON ANY POLLUTION CONTROLLED MOTOR VEHICLE. NOT LEGAL FOR SALE OR USE NATIONWIDE ON ANY FEDERAL POLLUTION CONTROLLED MOTOR VEHICLE UNDER THE CLEAN AIR ACT

BASE GASKETS AND O-RINGS T-SERIES 1999–UP

4"	.018"	Graphite	*each*	**93-1050-S**
4⅛"	.018"	Graphite	*each*	**93-1048-S**
			2 pack	**930-0101**
			10 pack	**93-1074**
4⅜"	.018"	Micropore	*2 pack*	**93-1082**

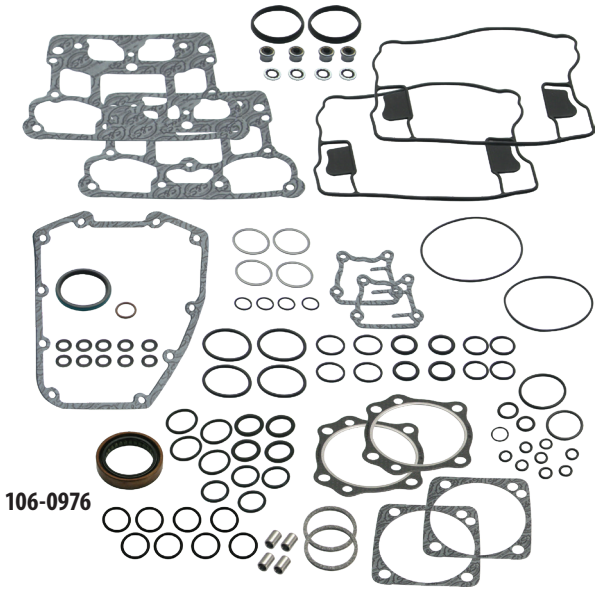

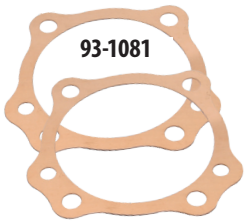

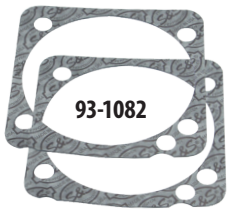



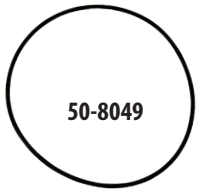

4⅛" Stock Bolt Pattern	.018"	Micropore	*each*	**93-1092-S**
			2 pack	**930-0101**
			10 pack	**93-1921**
4.425"	.018"	Micropore	*2 pack*	**900-0783**
4"	.103"	Viton O-ring	*each*	**50-8049**
3¾", 3⅞", 3.927"	.103"	Viton O-ring	*each*	**50-8048** *11256*

EXHAUST GASKETS

1984–'12 big twins *65324-83B, 65324-83A*	*each*	**106-5029**
	10 pack	**93-1072**







CONTINUED - GASKETS

VALVE GUIDE SEALS

S&S® Heads with Powdered Metal Valve Guide	*4 pack*	**900-0737**
Valve Stem Oil Seal, Hat Style *18094-02*	*each*	**900-0590**
Valve, Umbrella *26858-99*	*each*	**900-0495**
For 1984–'02 big twin stock heads & S&S® prior to Jan. 2014	*each*	**900-0338**
	8 pack	**90-2158**
CNC Heads (2005–up bt)		**106-5688**

ROCKER BOX GASKET KITS AND INDIVIDUAL GASKETS

S&S BILLET (OBSOLETE)

Gasket Kit		**90-4073**
O-ring, (-114), .625" ID x .812" OD, Black, Viton® *11270*		**50-8033**
O-ring,(-268),9.483" ID x		**50-8050**
Gasket, Breather Cover, Stock Pattern,1999–'10 *17591-99, 17162-03, 17592-99*		**90-4077**
Gasket, Breather Baffle, Stock Pattern, 1999–'10 *17162-03, 17592-99*		**90-4078**
Gasket, bottom rocker cover, 4⅛" 1984–up	*each*	**90-4071-S**
	2 pack	**90-4071**
	10 pack	**90-4099**

DIE CAST ROCKER BOXES

Gasket set - rocker cover, cast		**90-4111**
O-ring,(-223),1.625" ID x 1.875" OD,Vito		**50-8044**
Gasket, bottom rocker cover, 4⅛", 1984–up	*each*	**90-4071-S**
	2 pack	**90-4071**
	10 pack	**90-4099**
Gasket,Rckr Cvr,S&S® DieC,O-ring,1984–up		**90-4079**

STOCK ROCKER BOXES

Gasket kit for 1999–'06 bt (use w/S&S heads)		**90-4097**
Gasket kit for 1999–'06 bt (use w/Stock heads)		**900-0534**
O-ring, (-114), .625" ID x .812" OD, Black, Viton® *11270*		**50-8033**
Gasket, bottom rocker cover, 4⅛", 1984–up	*each*	**90-4071-S**
	2 pack	**90-4071**
	10 pack	**90-4099**
Gasket,Breather Cover,Stock Pattern, 1999–'10 *17591-99, 17162-03, 17592-99*		**90-4077**
Gasket,Breather Baffle,Stock Pattern, 1999–'10 *17162-03, 17592-99*		**90-4078**
Gasket,Rocker Cover,Steel, 1999–up bt	*each*	**90-4096-S**
Gasket,Rocker Cover,w/Stock Rocker Box, 1999–up bt	*each*	**90-4124**
	2 pack	**90-4120**
Filter, Breather USA *63815-99*	*each*	**900-0496**

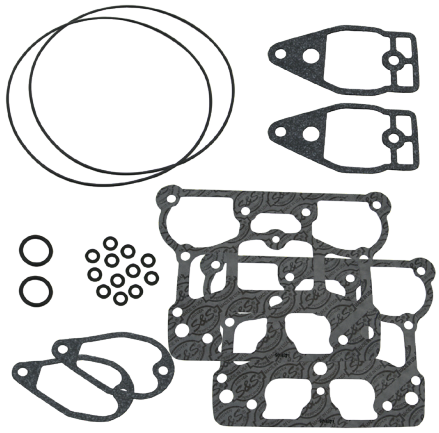

90-4073

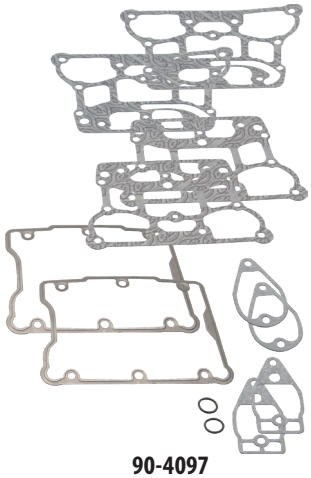

90-4097

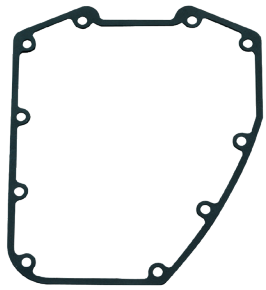

31-2032-S



33-5303-2



16-0235



16-0236

CONTINUED- GASKETS

LOWER END GASKETS AND SEALS

For S&S Heads/Stock boxes	*each*	**90-4124**
	2 pack	**90-4120**
Gear Cover gasket *25244-99A*	*each*	**31-2032-S**
Tappet Cover gasket *18635-99B*	*each*	**33-5303-S**
	2 pack	**33-5303-2**

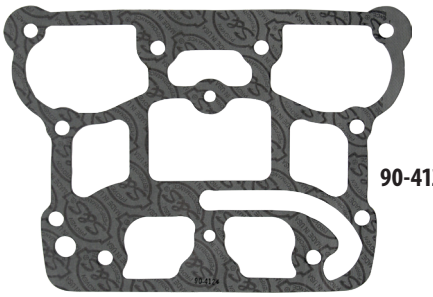

90-4124

PUSHROD O-RINGS

O-ring,Kit,Pushrod Cover,1984–'99 bt		**93-4022**
Top O-ring *11293, 11157, 11101, 11190*	*each*	**50-8039**
Middle O-ring *11132A*	*each*	**50-8038**
Bottom O-ring *11145A*	*each*	**50-8037**
Sprocket Shaft seal *12068*		**31-4035**
S&S Oil pump seal kit		**31-2097**
Oil Pump Scavenge o-ring *11293, 11157, 11101, 11190*	*each*	**50-8039**
Case alignment dowel o-ring *26432-76A*	*each*	**50-8034-S**
	2 pack	**50-8034**
Oil jet o-ring	*each*	**50-8270**
	5 pack	**50-8275**
Cam plate and oil line plate o-ring *11301*	*each*	**50-8066-S**



31-4035



50-8066-S

CONTINUED - GASKETS

FUEL SYSTEM GASKETS

Manifold Seals

S&S Manifold O-Ring	each	16-0235
	10 pack	16-0243
Stock Manifold O-ring *26995-86A, 26992-99, 26995-86B*	each	16-0236
	10 pack	16-0244
Cap, rubber, manifold, fitting		50-8372

CLASSIC TEARDROP AIR CLEANER

Backplate gasket		each	106-1724
		10 pack	106-2328
Vent seal washers silicone coated steel	½"	each	50-7055
		10 pack	50-7057
	⅜"	each	50-7054
		10 pack	50-7059

STEALTH AIR CLEANER

Backplate gasket

Stock CV Carb & EFI Throttle Body,1991–up xl/bt *(except Throttle by Wire) 29062-95B*		106-6022
Super E/G	each	106-1724
	10 pack	106-2328
For Muscle air cleaner *(includes lanyards).*		170-0137
Vent seal washers Nitrile Rubber Coated, .380" x .880" x .024"	each	50-7054
	10 pack	50-7059

SINGLE BORE TUNED INDUCTION

Backplate gasket

Gasket, Backplate - E/G/SBEFI	each	106-1724
	10 pack	106-2328
Gasket, S&S SBEFI 58mm		106-4662
Gasket, Stock carb/Throttle Body *29062-95B*		106-6022
Adaptor plate gasket		17-1022
Adaptor plate bracket o-ring	each	50-0446


106-4662

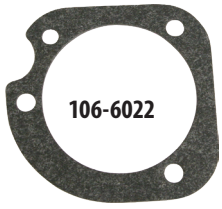
106-6022

11-2266




11-2282

SINGLE BORE EFI THROTTLE BODY

Backplate gasket		
52mm	each	106-1724
	10 pack	106-2328
58mm	each	106-4662
O-ring, throttle body to manifold		50-7967-S
Air Temp Sensor gasket		16-5009-S
IAC o-ring		50-8149-S
Fuel injector o-ring top		50-8264-S
Fuel injector o-ring bottom		50-8265-S
Fuel rail inlet o-ring *27237-95*	each	50-8137-S

CARBURETOR GASKETS (for Rebuild Kits, see page 202)

Bowl Gasket, Super E & G			11-2386
Pump cap o-ring - (two required)		each	50-8012
		10 pack	50-8100
Idle Mixture Needle o-ring		each	500-0036
		10 pack	500-0148
Bellows Seal, Accelerator Pump			11-2266
Accelerator pump diaphram			11-2282
Manifold to carb/ throttle body o-rings	Super E	each	50-8016
		10 pack	50-8094
	Super G	each	50-8015
		10 pack	50-8093
Seat and bowl plug o-ring		each	50-8009
		10 pack	50-8095

TRANSMISSION GASKETS

O-ring, (-114), .625" ID x .812" OD, Black, Viton® *11270*	50-8033
O-ring,Quad Seal,(-031),1.734" X 1.875" *11165*	50-8045
Seal,Transmission Output Shaft 2.255" x 3.388" x .250,1994–'99 bt *12067B*	56-3033

PRIMARY GASKETS

Gasket, Primary Cover, 1990–'05 Softail® and Dyna® models	each	56-4049

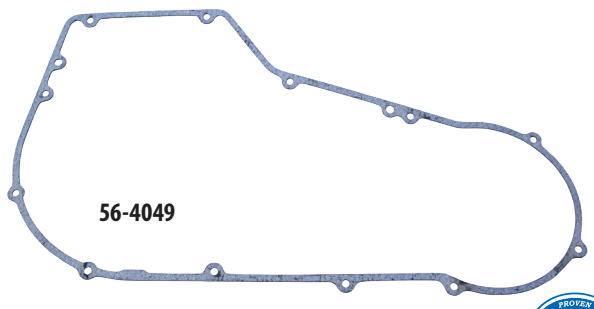
56-4049

CRANKCASE REPLACEMENT PARTS
FOR HARLEY-DAVIDSON® TWIN CAM 88® ENGINES

1. Bolt, stator 10-24 x1" SHC - 4 required *2720*
each **50-0044**
4 pack **31-0113**
2. Seal, sprocket shaft *12068* **31-4035**
3. Bearing, Timken® sprocket shaft *9028*
USA USA 1,2,3 ..... **31-4013**
4. Timken Main Bearing Spacers
Fits 1¼" stock diameter shaft.
.0995" - .1005" *9124* ..... USA **31-4071**
.1015" - .1025" *9125* ..... USA **31-4072**
.1035" - .1045" *9126* ..... USA **31-4073**
.1055" - .1065" *9127* ..... USA **31-4074**
.1075" - .1085" *9128* ..... USA **31-4075**
.1195" - .1205" *9134* ..... USA **31-4076**
5. Bolt, case 5⁄16" -18 x 3½" HHC - 8 required
Chrome *(each)* ..... **50-0254-S±**
Zinc *3427 (each)* **50-0117**
6. Washer, flat 5⁄16" x 1 1⁄16" x 1⁄16" - 8 required
Chrome *(each)* ..... **50-7104-S±**
Zinc *6320, 70907-07, 6016, 6702 (each)* **50-7034**
7. Bolt center case ¼" -28 x 5½" HHC Grade 8
Chrome *(each)* ..... **50-0252-S±**
Zinc *(each)* **50-0090**
8. Washer, flat, ¼" x .474" x .050"
Chrome *(each)* ..... **50-7105-S±**
Zinc *(each)* **50-7020**
9. Nut ¼"-28 Grade 8 - 1 required
Chrome *(each)* ..... **50-5017-S±**
Zinc *7683 (each)* **50-5011**
10. Cylinder stud, S&S® Bolt Pattern - 8 required *(each)* USA **31-2325-S**
8 pack ..... USA **31-2340**
Cylinder stud, Stock Bolt Pattern - 8 required *(each)* **310-0437**
11. Dowel, cylinder deck - 2 required *(4 pack)* **500-0219**
12. Bolt, cam plate ¼" -20 x 1" SHC - 4 required *852*
each **50-0084**
13. Bolt, cam plate ¼" -20 x 1¼" SHC - 2 required *4740A, 3482A*
each **50-0008**
14. Washer, flat ¼" chrome *(each)* ..... **50-7017±**
12 pack **50-7013**
15. O-ring, cam plate - 9 required *11301 (each)* **50-8066-S**
16. O-ring, oil pump 1 1⁄16" I.D. x 1 5⁄16" O.D. x 1⁄8" CS *11293, 11157, 11101, 11190*
each **50-8039**
17. O-ring, case alignment,- 2 required 9⁄16" I.D. x 1 1⁄16" O.D. x 1⁄6" CS *26432-76A*
each **50-8034-S**
2 pack **50-8034**
18. Dowel, cam plate - 2 required *16589-99A* **50-8148-S**
19. Bearing, inner cam *9198* ..... USA **31-4080**
20. Bearing, pinion shaft – Fits all S&S & OEM 2000-'02(Balanced models only) & all OEM 2003-up *24604-00D* **31-4085**
21. Retaining ring, internal, spiraloc - 2 required
35114-02 ..... **50-8160-S**
22. Plug, magnetic drain ..... USA 1,2,3 **50-8335**
23. Baffle plate **31-0119-S**
24. Screw 10-24 x ⅜" pan head - 2 required *(each)* **50-0050**
25. Dowel, case alignment - 2 required *16574-99A, 16573-83, 16573-83A*
each **50-8023**
10 pack **50-8109**
26. Piston Oiler Jet Kit *includes #27 (1), &, #29 (2)* ..... USA **310-0647**
27. O-ring,(-014),.500" ID x .625" OD,Nitrile
each **50-8270**
5 pack **50-8275**
28. Jet,Assembly,Piston Cooling,1999-up bt ..... **N/A**
29. Screw, Torx Panhead, Tri-Lobe, 8-32 x 3/8", Zinc, Steel *68042-99*
each **50-0054-S**
30. Fitting, crankcase vent
1999-'00 ..... **50-0454**
2001-'06 *(each)* **50-0449**
31. Plate, oil line cover **106-1184**
32. BHSH CS 5⁄16" -18 x ¾" *(10 pack)* **106-1178**
33. O-ring *11105, 11273 (each)* **50-8008**
10 pack **50-8078**
34. Pin, dowel *18535-99(each)* **50-8195-S**
2 pack **50-8195**

These parts are for crankcases manufactured before 8-1-06:
35. O-ring, 9⁄16" I.D. x 1 1⁄16" O.D. x 1⁄8" CS *26432-76A (each)* **50-8034-S**
2 pack **50-8034**
36. Bolt, ¼" -20 x ¾" SHCS *4069A (each)* **50-0067**
37. Hose, oil, inlet/outlet **50-8157**
38. Spring clips **50-8156-S**
39. Oil line fittings, inlet/outlet - 2 required ..... **N/A**
40. Oil line fitting- vent ..... **N/A**
41. Plug, sump *765 (each)* **50-8330**
42. Oil conduit block ..... **N/A**
43. Sensor,Kit,Crank Position,1984-2007 bt **(N/S)**
32707-01B, 32707-01C ..... USA USA 2,3 **55-1051**

HARDWARE KITS

45. Hardware Kit,Crankcase,Cam Plate Bolts,1999-up bt
includes #12 (4), #13 (2), #14 (6) **31-0117**
46. Hardware Kit,Crankcase,O-rings,1999-up bt *includes #15 (7), #16 (1), #17 (2)* **31-0111**
47. Hardware Kit,Crankcase Baffle Plate,1999-up bt *includes #23 (1) and #24 (2)* **31-0122**
48. Hardware kit, oil line plugs **50-1081**

(N/S) = Not Shown
(N/A) = NotAvailable

± WARNING: Cancer and Reproductive Harm – www.P65Warnings.ca.gov

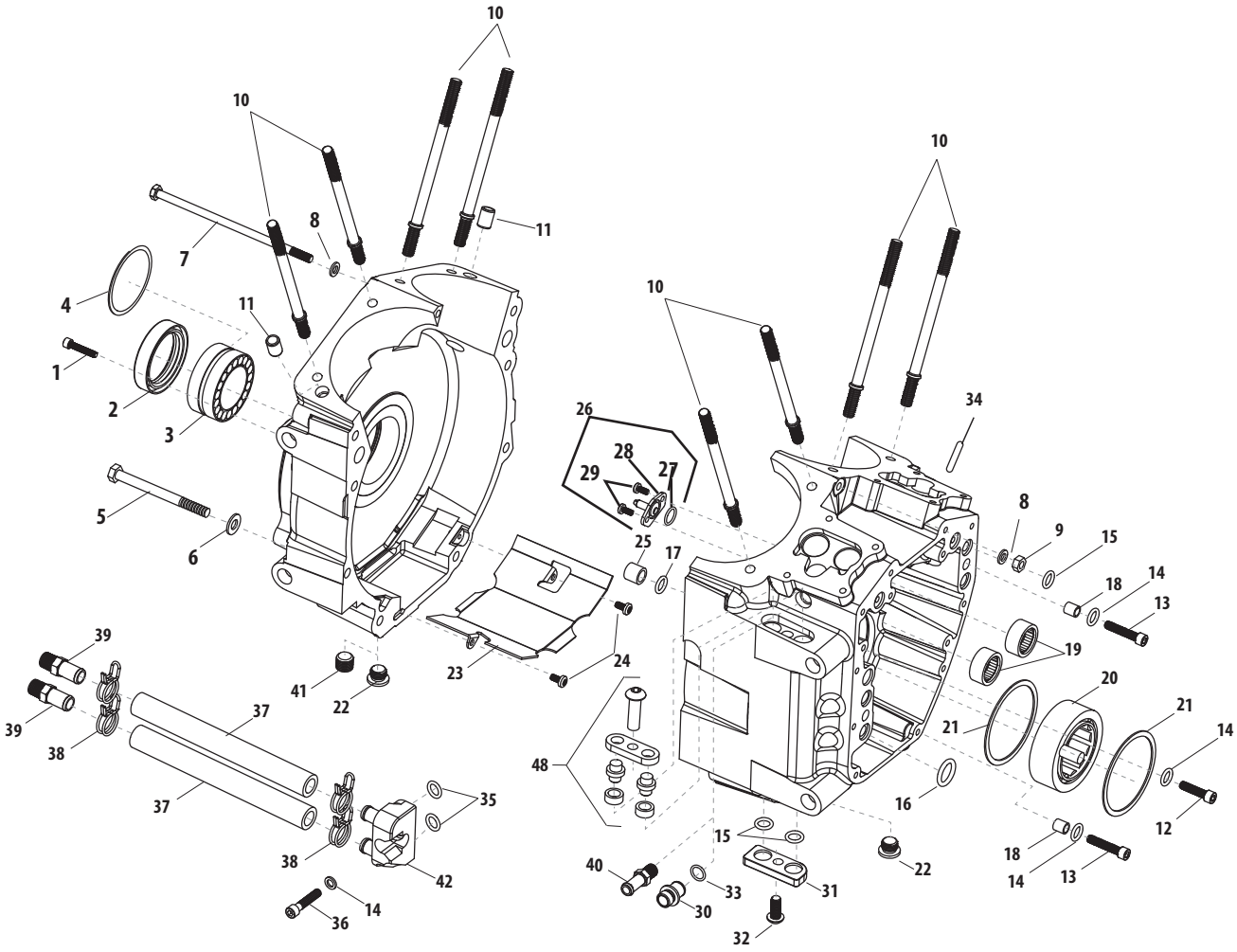

CRANKCASE BREATHER REED VALVE
REPLACEMENT PARTS ON PAGE 238

3-PIECE FLYWHEEL REPLACEMENT PARTS

1. Washer, Flywheel, Thrust, 1.25" x 1.83" x .136", Hardened Steel **320-0198**
2. Crankpin, Press-In, Straight, 1.671", 1999-Up bt (includes plugs)
   Standard **340-0069**
   +.001 ..... **340-0070**
   +.002 ..... **340-0071**
3. Race, Inner, Left Main Bearing, 1.25" x 1.65" x .713", Hardened Steel **340-0076**
4. Race, Inner, Right Main Bearing, 1.25" x 1.65" x 1.120", Hardened Steel **340-0077**
5. Connecting Rod, Set, Full Width Wristpin, 7.575", 120R ... **340-0062**
   Connecting Rod, Set, Full Width Wristpin, 7.667" **340-0060**
   Connecting Rod, Set, Full Width Wristpin, 7.800", T143 ... **340-0128**
6. Bearing, Set, Rod, Standard **310-0752**
7. Plug, Drive, .8965" x .850", Steel, Fatigue Proof
   2 pack **500-0187**
8. Retaining Ring,External,Pinion Bearing,1.160" x 1.480" x .046", Carbon Steel,SAE 1060-1090*11177A* **50-8057**
9. Bushing, Wristpin, .928", Bronze *each* **340-0024**

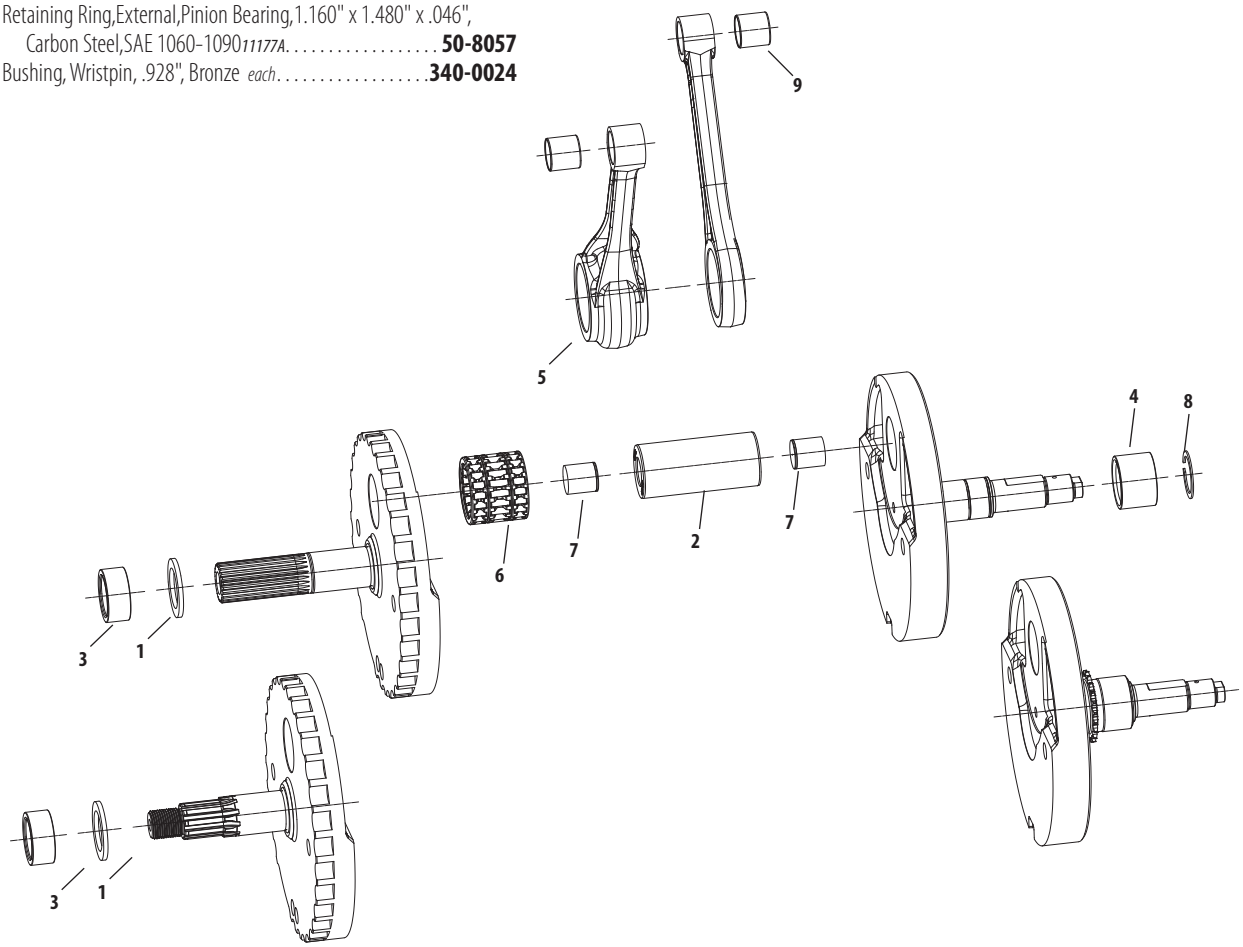

5-PIECE FLYWHEEL REPLACEMENT PARTS

1. Sprocket Shaft, 1999-2006 bt *(includes key #5)* **33-2009**
2. Sprocket Shaft, 2006 Dyna®, 2007-2012 bt **33-2011**
3. Pinion Shaft, 1999-2012 bt *(includes key #5)* ..... **N/A**
4. Pinion Shaft, 2000-2012 w/balancer *(includes key #5)* ..... **N/A**
5. Key *(each)* **50-8227**
6. Front Rod Race, 1999-2012 ..... USA **34-4008**
7. Rear Rod Race ..... USA **34-4013**
8. Crankpin (std.) **106-6239**
   - +.001 ..... **340-0017**
   - +.002 ..... **340-0018**
   - +.003 ..... **340-0019**
9. Crankpin Plug *(each)* **106-5256**
   - *2 pack* **50-8329-2**
10. Race/Bearing Set **340-0028**
11. Wristpin Bushing, 1999-2012*bt
    - Straight bushing ..... USA **34-4012**
12. Connecting Rod Set, 7.668" length
    - 1999-2006 bt, straight wristpin ends ..... **N/A**

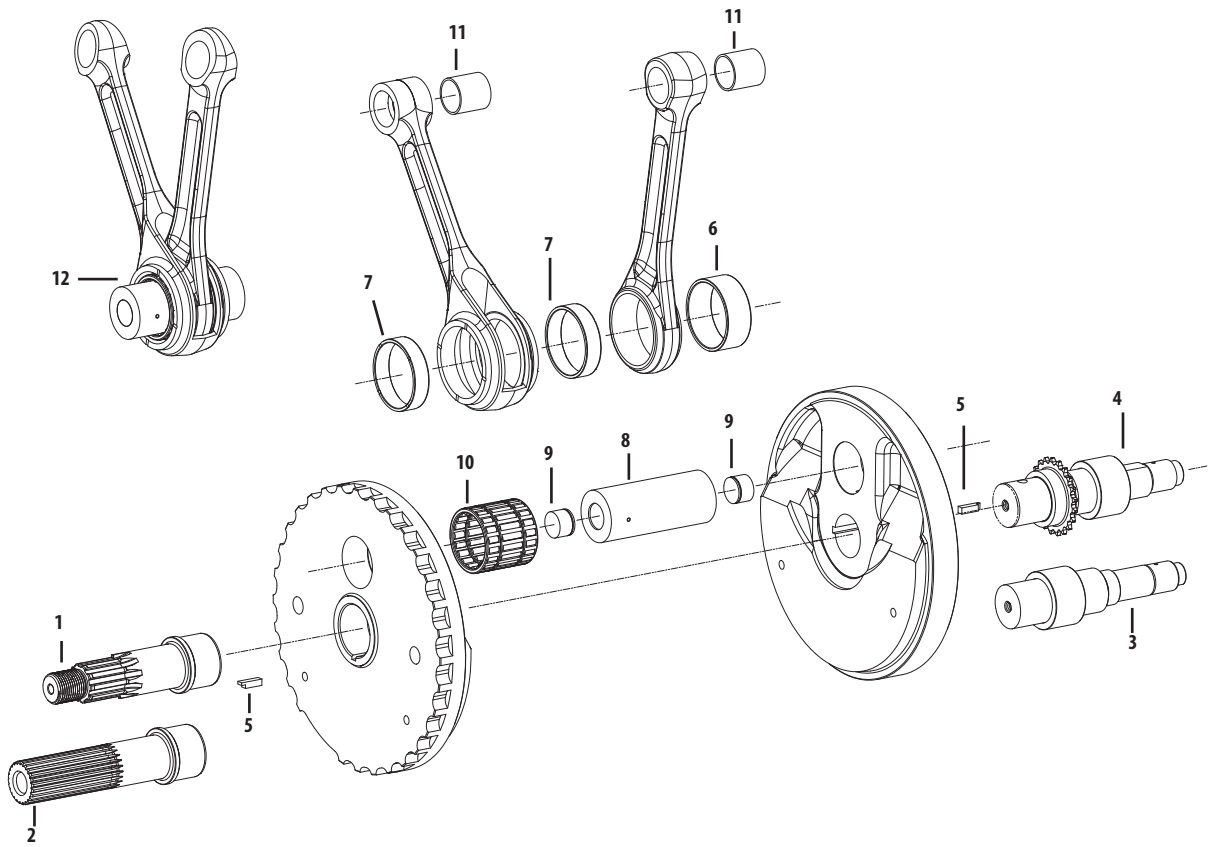

NOTES

S&S flywheels for Harley-Davidson® Twin Cam 88® and Twin Cam 96™ engines are pressed together as opposed to using the traditional tapered shafts and crankpin. Assembly and truing requires special equipment.

TC3 CAM PLATE REPLACEMENT PARTS

1. Cam support plate ..... **NA**
2. Pressure relief valve **31-6082-S**
3. Pressure relief spring **31-6018**
4. Pressure relief adjusting screw **170-0252**
5. Pressure relief adjusting screw lock nut **170-0251**
6. 1/8" 27 taper pipe plug **50-8331A**
7. Bearing retention plate kit **330-0015**
8. Hydraulic tensioner block off kit **106-5723**
9. O-ring kit **500-0326**

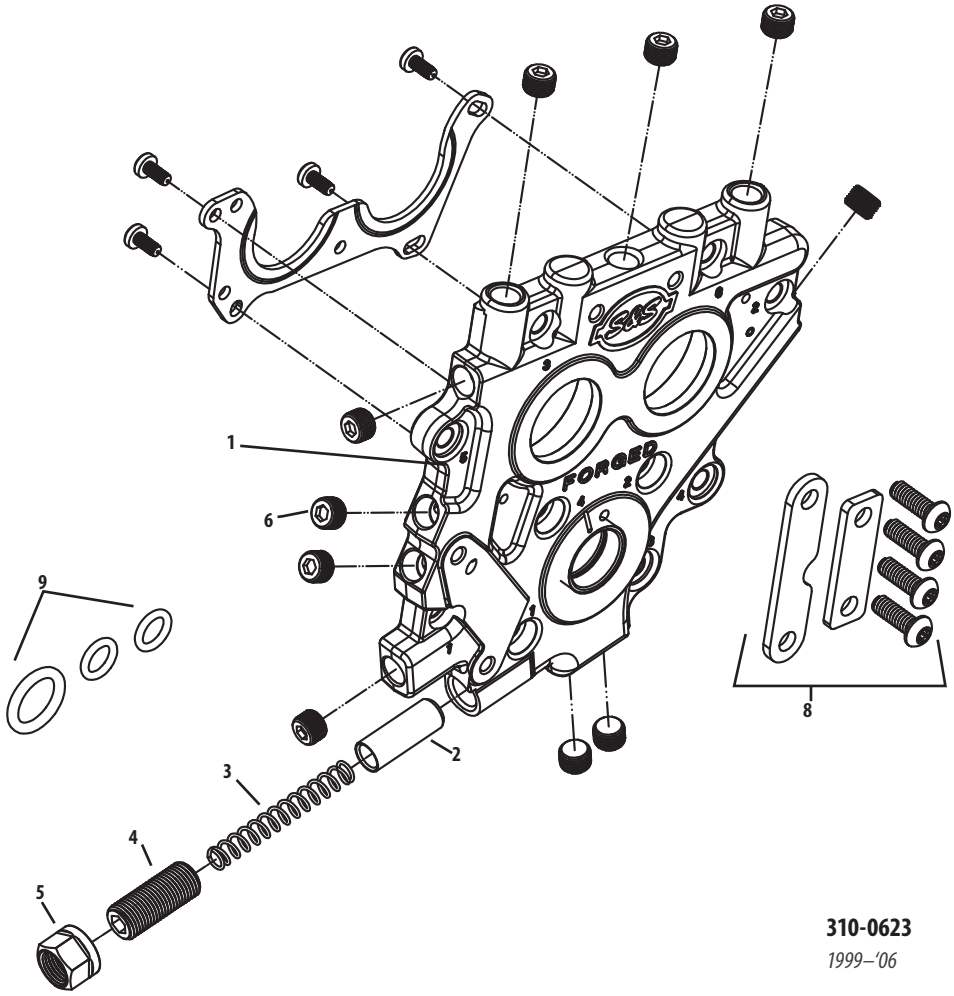

310-0623
1999–'06

TC3 OIL PUMP REPLACEMENT PARTS

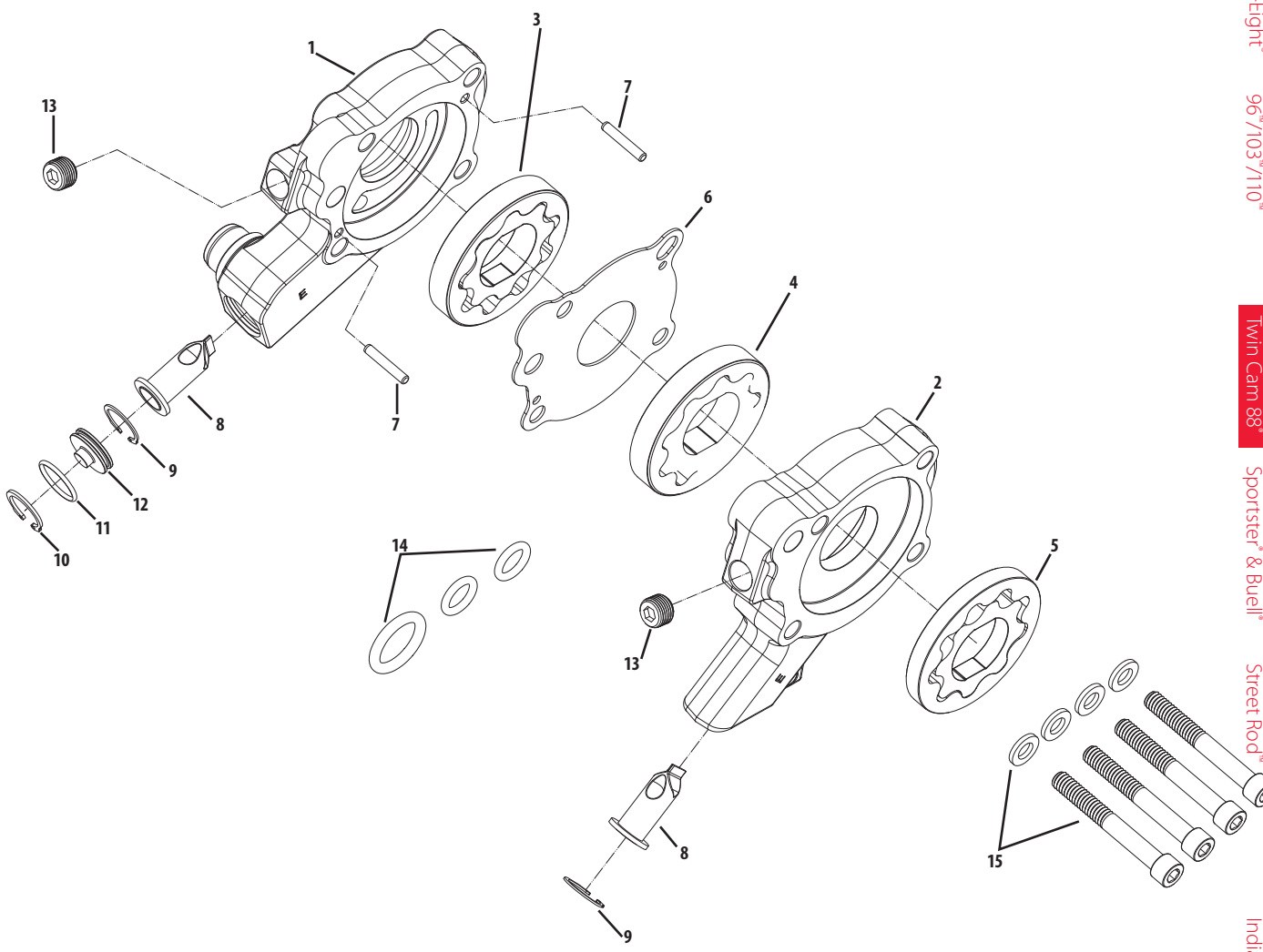

1.	Oil pump body case return section	**NA**
2.	Oil pump body cam chest return / pressure feed	**NA**
3.	Oil pump rotor set, flywheel cavity return	**310-1092**
4.	Oil pump rotor set, cam chest cavity return	**36-7021-S**
5.	Oil pump rotor set, supply	**310-0561**
6.	Plate, divider	**310-0516**
7.	Dowel Pin, .125 x .750 Hardened Steel	**106-3794**
8.	Debris screen	**310-0546**
9.	Internal Retaining Ring, .625	**500-0860**
10.	Internal Retaining Ring, 17mm	**500-0859**
11.	O-ring, 1.5mm x 14mm, Viton *(5 pack)*	**500-0861**
12.	Oil pump return plug	**310-0564**
13.	Plug, Pipe ⅛" 27	**50-8331A**
14.	O-ring kit	**500-0326**
15.	Screw, Kit, Oil Pump, 1999-Up BT (¼" 20 x 2" SHCS w/washers)	**500-0327**

B2 CYLINDER HEADS REPLACEMENT PARTS
FOR 1984–'17 BIG TWIN ENGINES (EXCEPT 2017 TOURING MODELS)

1. Cylinder Head – (See page 191)
2. Valve
   - Intake, 2.200" Dia. **90-2127**
   - Exhaust, 1.800" Dia. **90-2128**
3. Valve Seat
   - Exhaust, 1.800" Dia, **90-2126**
   - Intake, 2.200" Dia, **90-2125**
4. Valve Guide - Cast - Intake/Exhaust
   - Std. **900-0553**
   - +.030" **106-2170**
5. Adaptor, Exhaust Flange **55-6022**
6. Snap Ring **106-2164**
7. Flange, Exhaust, Front/Rear **55-6021**
8. Washer,Lock,.332" X .583" X .078" **50-7032**
9. Screw, Sh, 5/16" -18 X 1" *3201WA, 2708* **50-0101**
10. Gasket, Kit, Exhaust, B2 Heads, SA. **90-1900**
    Kit Includes Two Each:
    - A: Gasket, Exhaust Pipe *(each)* **93-1083-S**
      - *6 pack* **93-1083**
    - B: Retaining Ring. **50-8159-S**
11. Screw, SH, 5⁄16-18 X ¾" *3275* **50-0302-S**
12. Washer, 5/16" *6320, 70907-07, 6016, 6702* **50-7034**
13. Manifold Mounting Flange
    - Front **16-0247**
    - Rear **16-0248**
14. O-Ring, Manifold **16-0246-S**
    - *6 pack* **16-0246**
15. Fitting, Vent Hose, 1/8"-27 Pipe **50-8115**
16. Exhaust Flange, 1984–Up S&S® B2 Heads **550-0223**
17. Exhaust Adapter Flange For Stock Header Pipe, 1984–Up S&S® B2 Heads **550-0224**
18. Exhaust Flange Retaining Ring, 1.759" X .062" **550-0226**
19. Exhaust Gasket,Tapered Stainless Steel, 1984–Up bt *65324-83B, 65324-83A* **106-5029**
20. Press-In Aluminum Retaining Ring **550-0225**
21. Exhaust Gasket Backing Washer 2.18" X 1.690" X.125" **550-0220**
22. Exhaust Flange Retaining Ring, 2.125" X .078" **50-8159-S**
23. Exhaust Gasket, Tapered, Stainless Steel **550-0221**
24. Exhaust Gasket Backing Washer 2.18" X 1.885" X .200" **550-0219**
25. Weld-On Exhaust Header Pipe **550-0222**

VALVE SPRING REPLACEMENT PARTS **ON PAGE 222**

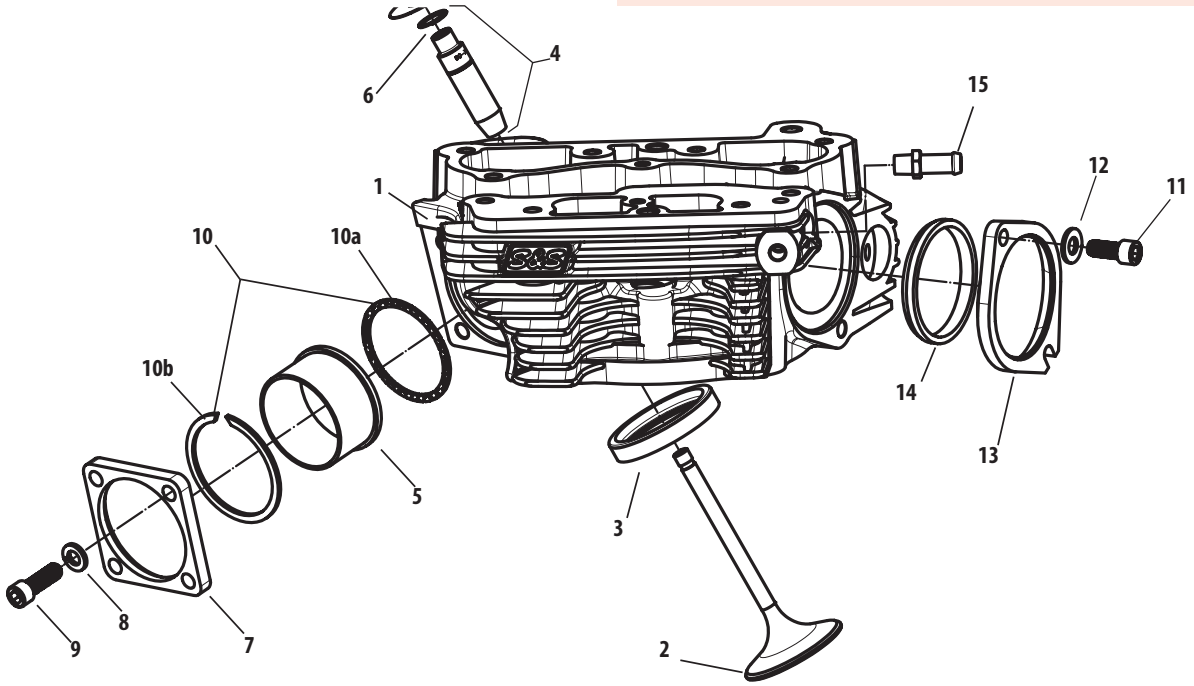

FOR B2 HEADS USING STOCK HEADER PIPE SIZE EXHAUST SYSTEMS

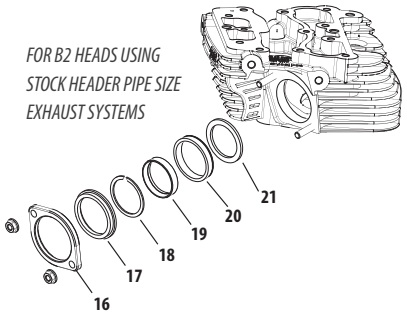

FOR B2 HEADS USING A PRE-MADE 2" OD HEADER PIPE SIZE EXHAUST SYSTEMS

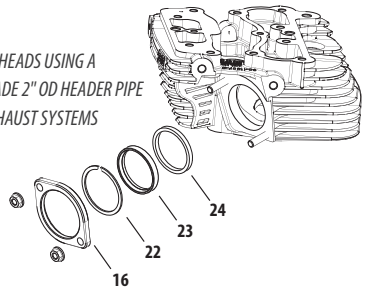

FOR B2 HEADS MODIFYING OR MAKING A 2" OD HEADER PIPE SIZE EXHAUST SYSTEMS

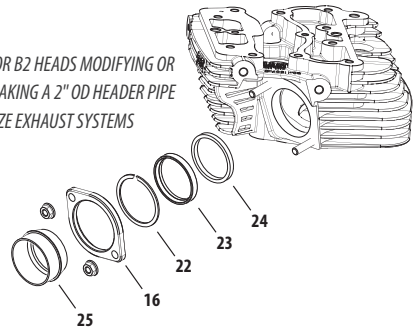

B3 CYLINDER HEADS REPLACEMENT PARTS
FOR S&S T143 ENGINES

1. Cylinder Heads Set, B3
   - Black **900-0803**
   - Silver **900-0818**
2. Seat, Blank, B3 Heads, 2.300"
   - Intake **900-0677**
   - Exhaust **90-2126-S**
3. Valve
   - Intake **900-0678**
   - Exhaust **900-0679**
4. Seal,Manifold,B2 Heads,2.250" x 2.520" x .290" **16-0246-S**
5. Flange
   - Front **160-0087**
   - Rear **160-0088**
   - Set **160-0091**
6. Washer,Flat,.344" x .688" x .065",Zinc,Steel **50-7034**
7. Bolt,Hex Head,Gr5,5/16-18 x 1",Zinc **50-0108**
8. Screw,SHCS,w/Flat Washer,5/16-18 x 1",Zinc **50-0125-S**
9. Fitting,Pipe,Straight,1/4-18 NPTF x 1.510" X .500",Zinc,Steel **50-8158-S**
10. Valve Guide, Intake, Powder Metal **900-0780**
11. Retaining Ring,External,Spiral,Heavy Duty,.525" x .035" x .050", Carbon Steel **106-2164**
12. Exhaust Gasket Backing Washer, 2.18" x 1.885" x .200" **550-0219**
13. Exhaust Gasket, Tapered, Stainless Steel **550-0221**
14. Exhaust Flange Retaining Ring, 2.125" x .078" **50-8159-S**
15. Exhaust Flange **550-0223**
16. Weld-On Exhaust Header Pipe **550-0222**
17. Exhaust Adapter Flange for Stock Header Pipe **550-0224**
18. Exhaust Flange Retaining Ring, 1.759" x .062" **550-0226**
19. Exhaust Gasket,Tapered Stainless Steel **106-5029**
20. Press-in Aluminum Retaining Ring, 1984–up **550-0225**
21. Exhaust Gasket Backing Washer, 2.18" x 1.690" x.125" **550-0220**
22. Head Mount Bracket Kit
    - 2008 T143 ..... **900-0797**
    - 2009-up T143 ..... **900-0798**

VALVE SPRING REPLACEMENT PARTS ON PAGE 222

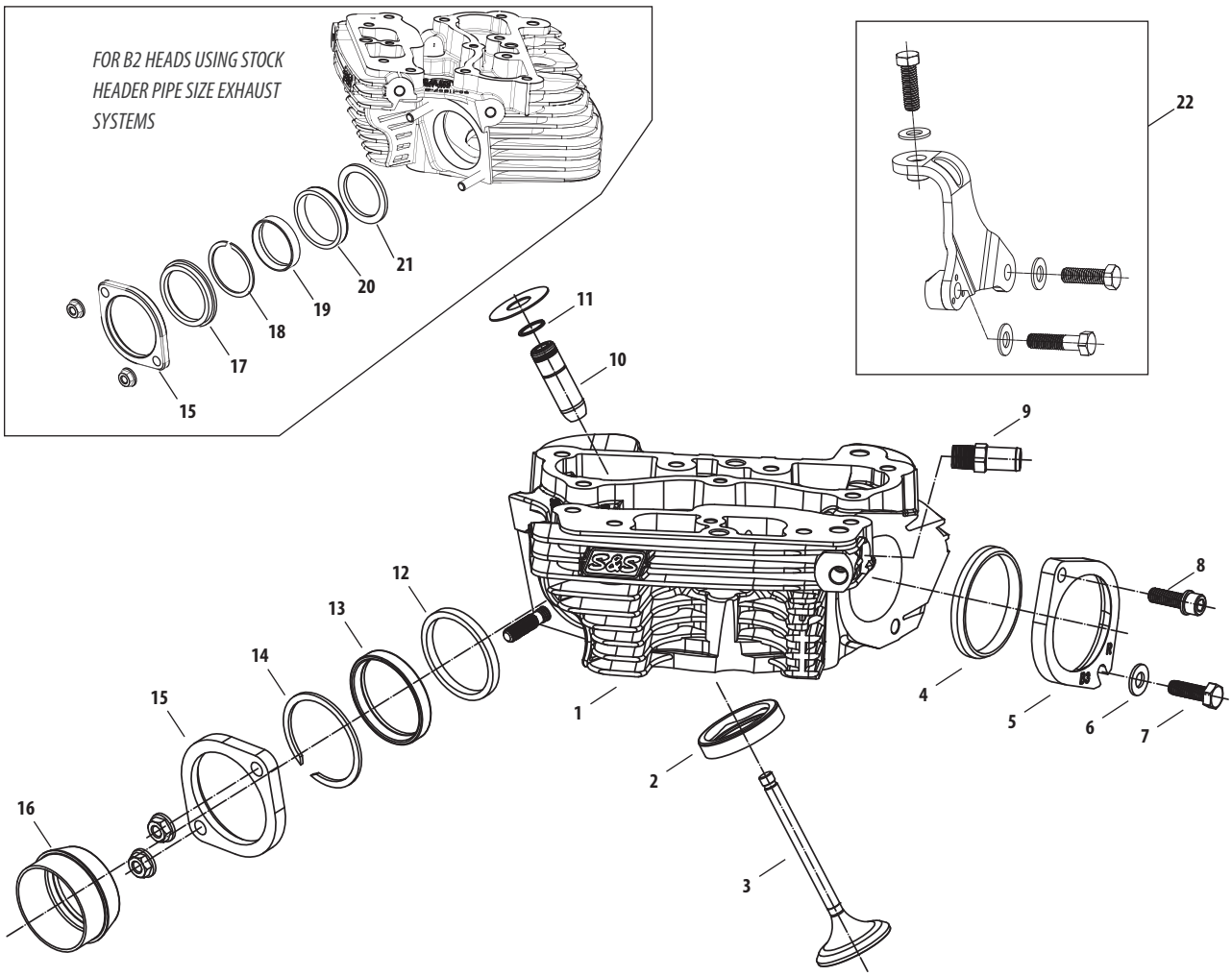

All reference to HD® part numbers is for identification purposes only. We in no way are implying that any of S&S Cycle's products are original equipment parts or that they are equivalent to the corresponding HD® part number shown.

SUPER STOCK® CYLINDER HEADS REPLACEMENT PARTS
FOR 1999–UP BIG TWIN ENGINES

1. Cylinder head (See page 192)

2. Valve
- All S&S heads with 89cc chamber
  - Intake
    - 2.000" diameter **90-2000**
    - 2.000"diameter +.085" stem length **90-2004**
  - Exhaust
    - 1.605" diameter **90-2001**
- All S&S heads with 79cc chamber
  - Intake – 1.940" diameter **90-2025**
  - Exhaust – 1.575" diameter **90-2026**

3. Valve seat
- All S&S heads with 89cc chamber
  - Intake - 2.000" diameter **90-2002**
  - Exhaust - 1.605" diameter **90-2003**
- All S&S heads with 79cc chamber
  - Intake - 1.940" diameter **90-2027**
  - Exhaust - 1.575" diameter **90-2028**

4a. Valve guide - Cast- Intake or Exhaust
- Standard *Diameter .5625/.5620* ***18112-92*** **90-2210**
- +.001" *Diameter .5635/.5630* ***18130-83C*** **90-2211**
- +.002" *Diameter .5645/.5640* ***18133-83A, 18133-83D*** **90-2212**
- +.003" *Diameter .5655/.5650* ***18131-83C*** **90-2213**
- +.030" *Diameter .5925/.5920* **90-2219**

4b. Valve guide -Powder Metal - Intake or Exhaust
- Standard **900-0553**
- +.001" **900-0554**
- +.002" **900-0555**
- +.003" **900-0556**

5. Head bolt assembly – (8 Required) (Includes head bolt washer)
- 88", 95", 96", 100", 107" & 111" **93-3030**
  - *4 pack* **93-3030-4**
- 116", 117" **93-3037**
  - *4 pack* **93-3037-4**

6. Head bolt washer
- .150" *(each)* **50-0418-S**
- .250" *(each)* **50-7091**

7. Exhaust port stud ***16715-83*** *(each)* **50-0493**
- *5 pack* **50-1028**

8. Lock washer - 5⁄16" **50-7032**

9. Nut, flanged - 5⁄16" -24
- Zinc *(each)* **50-5025-S**
  - *2 pack* **50-5025-2**
  - *5 pack* **50-1001**
- Chrome *(each)* ..... **50-5030-S**±

10. Exhaust pipe gasket, tapered ***65324-83B, 65324-83A*** *(each)* **106-5029**
- *10 pack* **93-1072**

11. Intake manifold (See page 196)

12. Manifold mounting screw
- SH - 5⁄16"-18 x ¾" ***3275*** *(each)* **50-0302-S**
- SH - 5⁄16"-18 x 1" ***3201WA, 2708*** **50-0101**
- HH - 5⁄16"-18 x 1" ***3987*** *(each)* **50-0108**

13. Flat washer - 5⁄16" ***6320, 70907-07, 6016, 6702*** **50-7034**

14. Manifold mounting flange

a. Standard Profile Flange
- Front ***27009-86A*** *(each)* **16-0232**
  - *5 pack* **16-0600**
- Rear ***27010-86A*** *(each)* **16-0233**
  - *5 pack* **16-0601**
- Set (Front & Rear) **106-3516**

b. Low Profile Flange
- Front **106-1344**
- Rear **106-1345**

15. Manifold o-ring
- For S&S heads *(each)* **16-0235**
  - *10 pack* **16-0243**
- For Stock heads ***26995-86B, 26995-86A, 26992-99*** *(each)* **16-0236**
  - *10 pack* **16-0244**

16. Head gasket
- For Stock Bolt Pattern
  - 3¾" x .043" Graphite ***16775-99B*** *(each)* **93-1045-S**
  - 3⅞"/3.927" x .030" Layered Steel *(2 pack)* **900-0605**
  - 3⅞"/3.927" x .045" Layered Steel *(each)* **900-0606**
  - 4" x .043" Graphite *(each)* **93-1043-S**
  - 4⅛" x .043" Layered Steel *(each)* **93-1091-S**
  - 4⅛" x .030" Layered Steel *(2 pack)* **900-0217**
- For S&S Bores
  - 4⅛" x .043" Graphite *(each)* **93-1047-S**
    - *10 pack* **93-1073**
  - 4⅜" x .045" Copper *(Set of Two)* **93-1081**

17. Alignment dowel, base and head ***16595-99A***
- *each* **50-8177**
- *4 pack* **50-8177-4**

18. Alignment dowel o-ring – Base (all bore sizes)
S&S heads 3¾" bore only ***11105, 11273***
- *each* **50-8008**
- *10 pack* **50-8078**

19. Plug, HH - 14mm *(each)* **90-4916**
- *2 pack* **90-4916-2**

20. Washer, compression - 14mm, 507" x .705" x .047" *(each)* **50-7094**

21. Head mount bolt - ⅜"-16 x 1¼" ***4716W*** *(each)* **50-0168**

22. Flat washer - ⅜" *(each)* **50-7051**

23. Vent hose fitting, ***(For 4⅛" Bore Only)***
- Front, 1⁄16"-27 pipe **50-8117**
- Rear, ⅛"-27 pipe **50-8115**

24. Check Valve ***(For 4⅛" Bore Only)*** **50-8122**

25. Base Gaskets
- For S&S Bores
  - 4⅜" x .018" Graphite *(2 pack)* **93-1082**
  - 4⅛" x .018" Graphite *(each)* **93-1048-S**
    - *10 pack* **93-1074**
  - 4" x .018" Graphite *(each)* **93-1050-S**
- For Stock Bolt Pattern
  - 4⅛" x .018" Graphite *(each)* **93-1092-S**
    - *10 pack* **93-1921**

26. Base O-ring (Used for early S&S bores)
- 4" x .103" *(each)* **50-8049**
- 3⅝" or 3½" x.103" ***11256*** *(each)* **50-8048**

± WARNING: Cancer and Reproductive Harm – www.P65Warnings.ca.gov

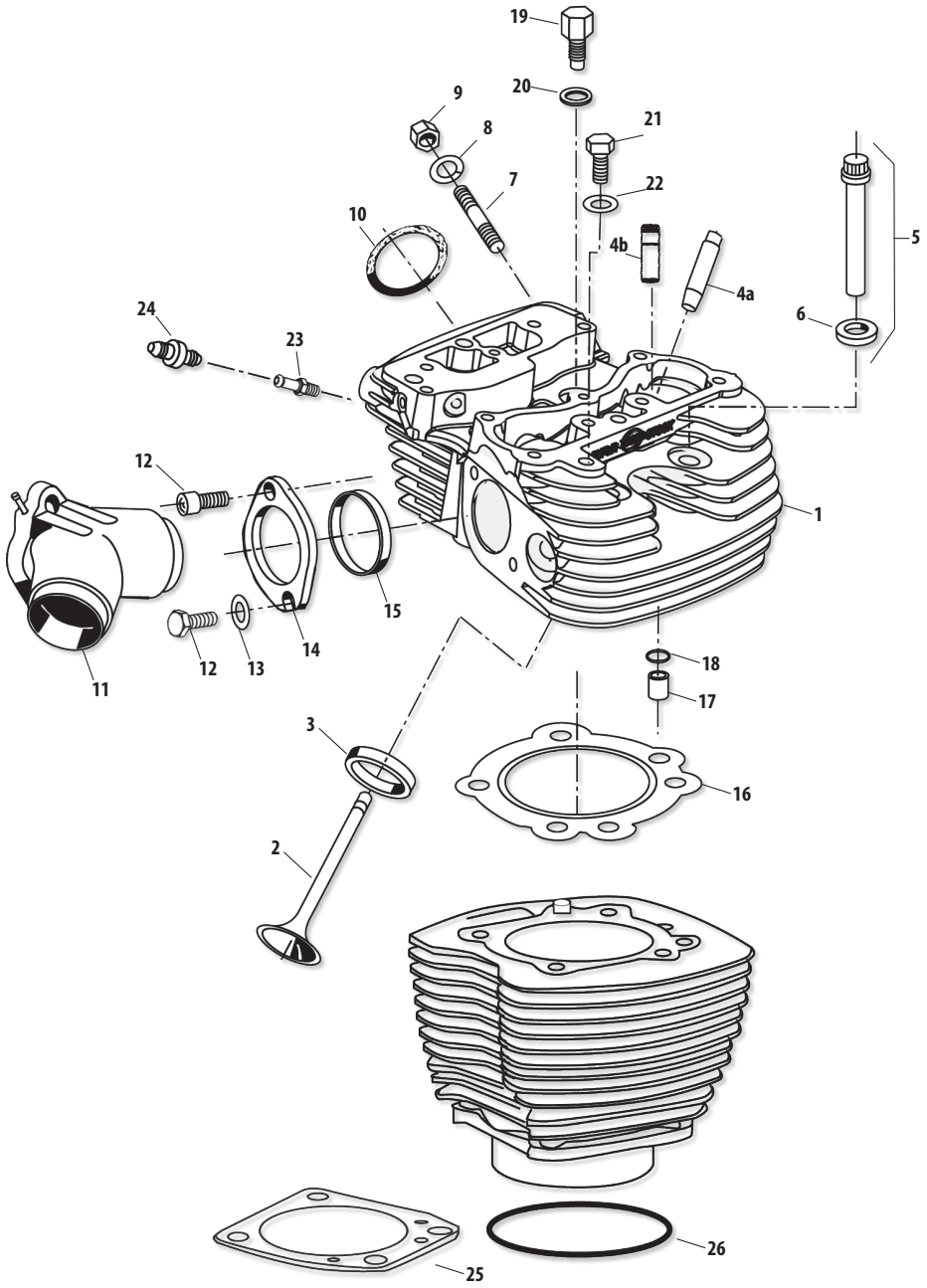

TOP END REBUILD GASKET KITS FOR S&S® ENGINES FOR BIG TWINS

Bore Size	Part #
S&S 4⅜"	**90-9511***
S&S 4⅛"	**90-9506**
4⅛" Stock Cases	**90-9510**
4"	**90-9505**
3⅞"	**90-9504**

Kits include: Intake and exhaust seals, head & base gaskets, o-rings, pushrod o-rings, and valve guide seals.
**Does not include intake seals.*

All reference to HD® part numbers is for identification purposes only. We in no way are implying that any of S&S Cycle's products are original equipment parts or that they are equivalent to the corresponding HD® part number shown.

VALVE SPRING REPLACEMENT PARTS

.720" & .660" Lift Valve Springs (B3 Cylinder Heads)

1. Seal, valve guide, intake/exhaust *18001-83B (each)* **90-2008**
   8 pack **90-2158**
2. Keeper, valve spring, SA **90-2153A**
3. Valve spring shim
   .015" *(each)* **90-2086**
   5 pack **50-7161**
   .030" *(each)* **90-2087**
   5 pack **90-2198**

.650" Lift Valve Springs (B2 Cylinder Heads)

1. Seal, Valve Guide,fits .315" x .554"OD, Viton® *(4 pack)* **900-0737**
2. Keeper, valve spring, Standard, 9˚ *(each)* **90-2094-S**

.650" Lift Sidewinder® Valve Springs (Stock, Super Stock® & CNC Ported Cylinder Heads)

1. Spring, Valve .650" **106-5689**
2. Collar, Top, Steel **106-5690**
3. Collar, Bottom, Steel **106-5691**
4. Seal,Valve
   S&S CNC Ported Heads & 2005-up bt w/7mm valve stem **106-5688**
   S&S Super Stock Heads
   .420" Cast *(each)* **900-0338**
   .562" Powder Metal *(4 pack)* **900-0737**
5. Keeper, valve spring **106-5692**
6. Valve Spring Shim
   .015" *(each)* **500-0013**
   .030" *(each)* **500-0014**

.585" Lift Valve Springs (Stock, Super Stock® & CNC Ported Cylinder Heads)

1. Spring, Valve .585" **900-0444**
2. Collar, Top **900-0550**
3. Collar, Bottom
   For Stock Heads w/7mm valve stem *(includes seal)* **900-0590**
   For CNC Ported Heads w/7mm valve stem **900-0549**
   For Super Stock Heads **900-0600**
4. Seal, valve guide
   For Stock Heads w/7mm valve stem *(includes bottom collar)* **900-0590**
   For CNC Ported Heads w/7mm valve stem **106-5688**
   For Super Stock Heads
   .420" Cast *(each)* **900-0338**
   .562" Powdermetal *(4 pack)* **900-0737**
5. Keeper, valve spring
   For Stock and CNC Ported Heads **106-5692**
   For Super Stock Heads **90-2094-S**
6. Valve spring shim
   For Stock and CNC Ported Heads
   .015" **500-0013**
   .030" **500-0014**
   For Super Stock Heads
   .015" **90-2086**
   .030" **90-2087**

.720" & .660" Lift Valve Springs

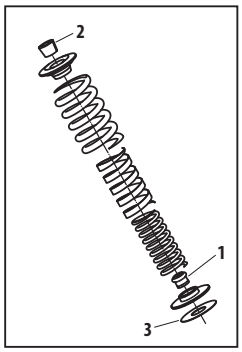

.650" Lift Valve Springs

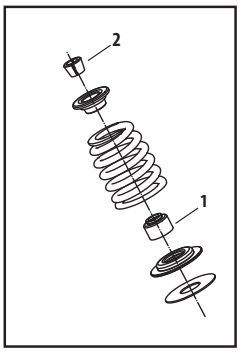

.650" Lift Sidewinder® Valve Springs

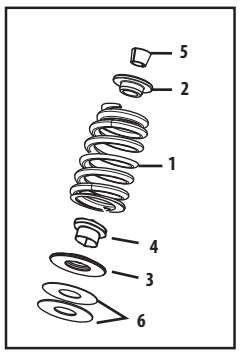

.585" Lift Valve Springs

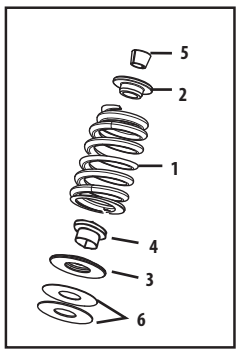

DIE-CAST ROCKER COVER REPLACEMENT PARTS
FOR 1999–UP BIG TWIN ENGINES

1. Screw, socket head ¼"-20 x ¾" *4069A (each)* **50-0067**
2. Washer, flat ¼" *(each)* **50-7017**
   12 pack **50-7013**
3. Washer, silicone coated ¼" *(each)* **50-7015**
   8 pack **50-7015-8**
   12 pack **50-7015-12**
4. Seal, o-ring
   (Included in gasket kit see #16 below.)
5. Screw, socket head, ¼"-20 x 1" *4741A*
   each **50-0092-S**
   4 pack **50-0092P**
6. Screw, socket head, ¼"-20 x 2" *25794-36* **50-0013**
7. Screw, hex flange head, 5⁄16"-18 x 2½" *3501* **50-0123**
8. Support, rocker arm **90-4140**
9. Gasket, rocker cover, Graphite
   For Stock or S&S rocker covers on stock heads *16719-99B*
   each **90-4071-S**
   2 pack **90-4071**
   10 pack **90-4099**
   For Stock rocker covers on S&S heads *(each)* **90-4124**
   2 pack **90-4120**
10. Housing, rocker, Chrome ..... **900-4283**±
11. Screw, socket head, 5⁄16"-18 x 1" **50-0125-S**
12. Seal, rocker cover
    (Included in gasket kit see #16 below.)
13. Washer, flat 5⁄16" *(each)* **50-7026**
14. Screw, socket head 5⁄16"-18 x 2¼"
    each **50-0115-S**
15. Cover, rocker, chrome ..... **900-0706**±
16. Gasket set - rocker cover, cast (Not Shown) **90-4111**
17. Washer,.261" x .474" x .050",Annealed,Stainless Steel **50-7020**

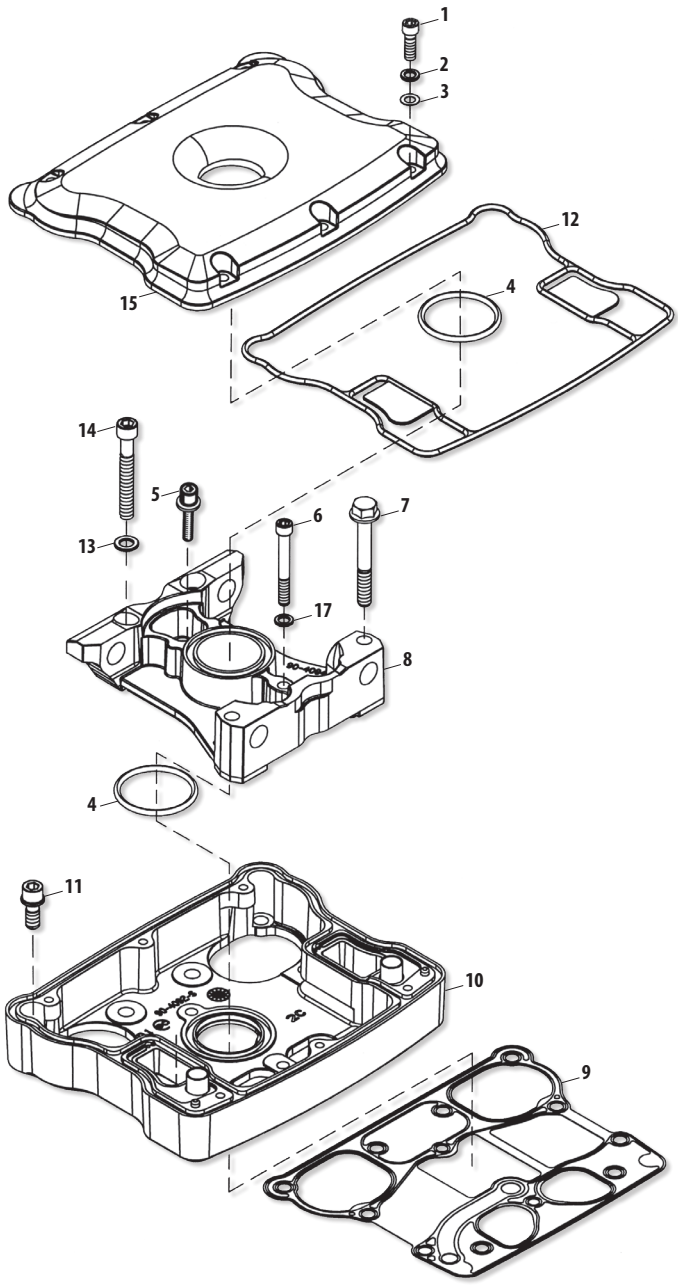

All reference to HD® part numbers is for identification purposes only. We in no way are implying that any of S&S Cycle's products are original equipment parts or that they are equivalent to the corresponding HD® part number shown.

± WARNING: Cancer and Reproductive Harm – www.P65Warnings.ca.gov

BILLET ROCKER COVER REPLACEMENT PARTS
FOR 1999–UP BIG TWIN ENGINES (DISCONTINUED)

1. Base assembly, rocker ..... **N/A**
2. Top, rocker cover ..... **N/A**
3. Screw, SHCS, ¼"-20 x ¾" *4069A (each)*..... **50-0067**
4. Washer, flat, chrome, 260" x .425" x .060"
   each ..... **50-7017±**
   12 pack ..... **50-7013±**
5. Washer, flat, rubber coated, ¼" x 7⁄16" x .020"
   each **50-7015**
   8 pack **50-7015-8**
   12 pack **50-7015-12**
6. SHCS, 5⁄16"-18 x 1" with flatwasher **50-0125-S**
7. O-ring, rocker cover seal, Viton® **50-8050**
8. O-ring, (-114), .625" ID x .937" OD *11270*..... **50-8033**
9. Gasket, Breather Baffle, Stock Pattern, Paper, 1999-'10 bt
   17162-03, 17592-99 each **90-4078**
10. Gasket, Breather Cover, Stock Pattern, Paper, 1999-'10 bt
    17591-99, 17162-03, 17592-99 each **90-4077**
11. Gasket, Rocker Cover, Steel, 1999-up bt *17386-99A*
    each **90-4096-S**
12. Gasket, bottom rocker cover
    each **90-4071-S**
    2 pack **90-4071**
    10 pack **90-4099**

9. Gasket kit, rocker cover (includes gaskets for 2 rocker covers)
   For S&S billet rocker covers
   (includes #5,7,8,9,10,12)..... **90-4073**
   For 1999-'10 bt
   (includes #8,9,10,11,12) **90-4097**

N/A = No longer available

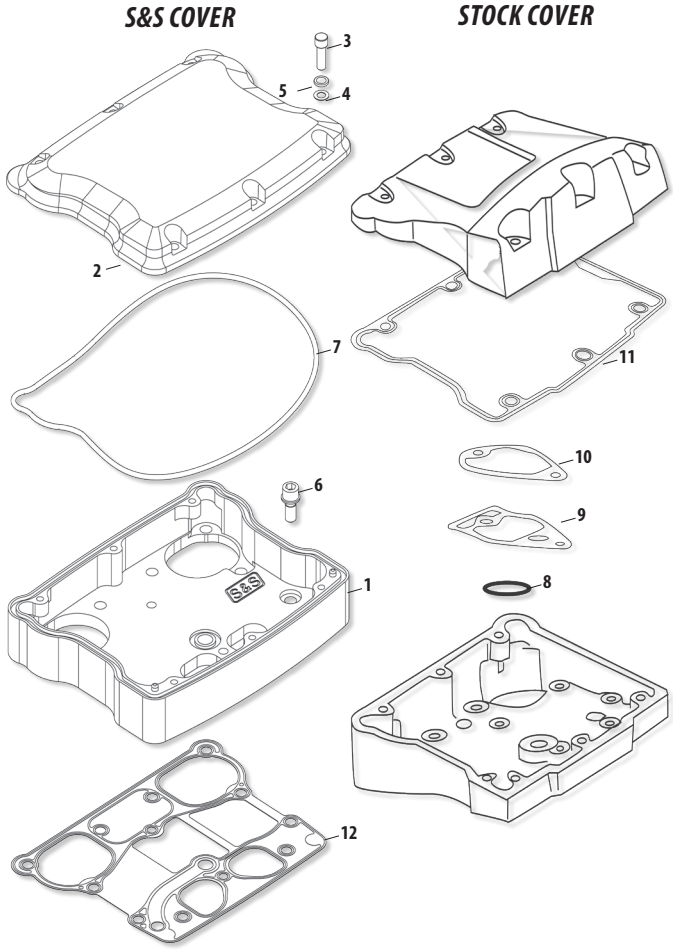

All reference to HD® part numbers is for identification purposes only. We in no way are implying that any of S&S Cycle's products are original equipment parts or that they are equivalent to the corresponding HD® part number shown.

± WARNING: Cancer and Reproductive Harm – www.P65Warnings.ca.gov

STEALTH AIR CLEANER REPLACEMENT PARTS

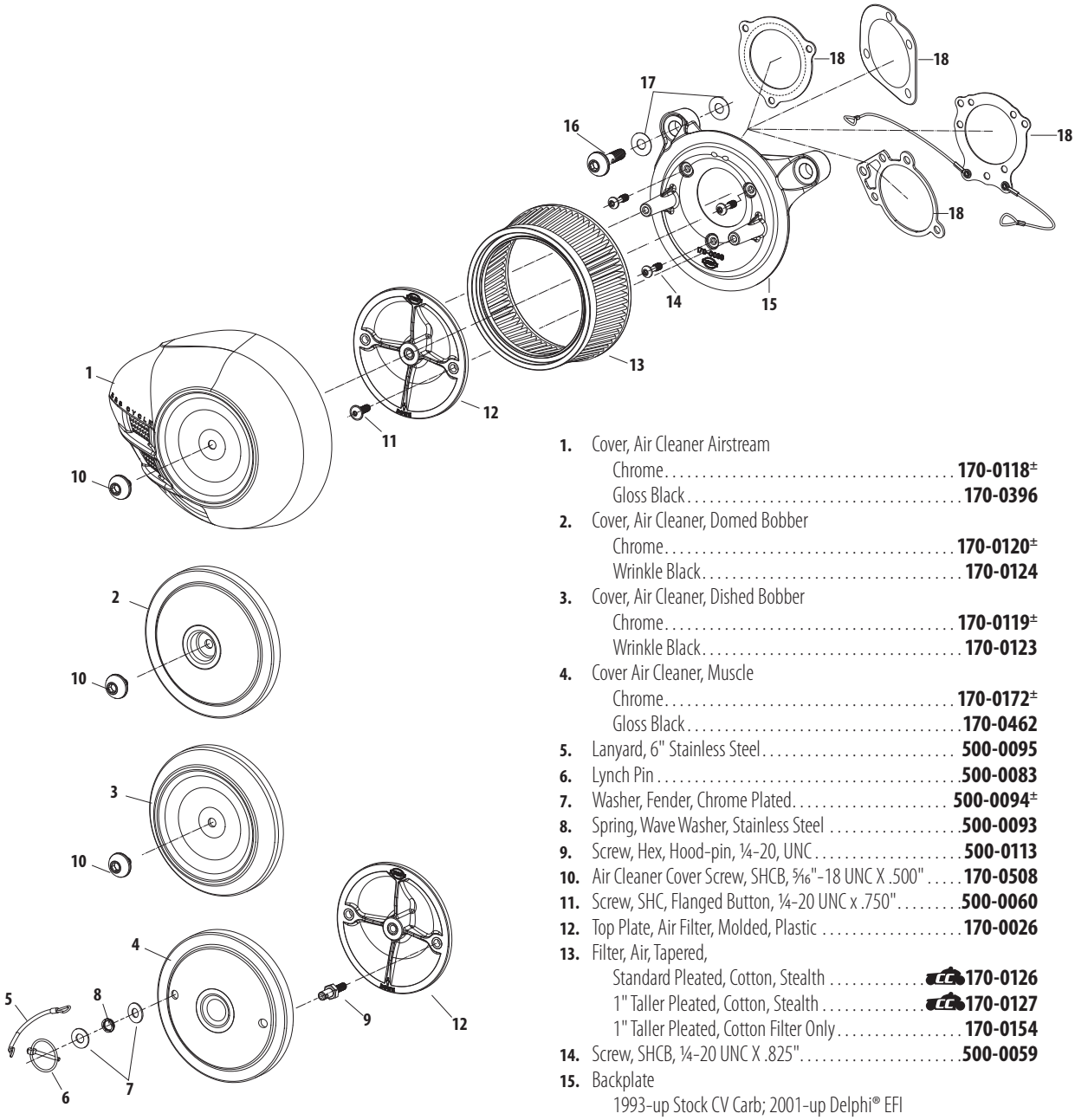

1. Cover, Air Cleaner Airstream
   - Chrome . . . . . **170-0118**±
   - Gloss Black **170-0396**
2. Cover, Air Cleaner, Domed Bobber
   - Chrome . . . . . **170-0120**±
   - Wrinkle Black **170-0124**
3. Cover, Air Cleaner, Dished Bobber
   - Chrome . . . . . **170-0119**±
   - Wrinkle Black **170-0123**
4. Cover Air Cleaner, Muscle
   - Chrome . . . . . **170-0172**±
   - Gloss Black **170-0462**
5. Lanyard, 6" Stainless Steel **500-0095**
6. Lynch Pin **500-0083**
7. Washer, Fender, Chrome Plated . . . . . **500-0094**±
8. Spring, Wave Washer, Stainless Steel **500-0093**
9. Screw, Hex, Hood-pin, ¼-20, UNC **500-0113**
10. Air Cleaner Cover Screw, SHCB, 5⁄16"-18 UNC X .500" **170-0508**
11. Screw, SHC, Flanged Button, ¼-20 UNC x .750" **500-0060**
12. Top Plate, Air Filter, Molded, Plastic **170-0026**
13. Filter, Air, Tapered,
    - Standard Pleated, Cotton, Stealth . . . . . CC **170-0126**
    - 1" Taller Pleated, Cotton, Stealth . . . . . CC **170-0127**
    - 1" Taller Pleated, Cotton Filter Only **170-0154**
14. Screw, SHCB, ¼-20 UNC X .825" **500-0059**
15. Backplate
    - 1993-up Stock CV Carb; 2001-up Delphi® EFI *(except Throttle by Wire)* **170-0021**
    - Super E/G, Black, Die Cast, 1993-up bt. **170-0049**
16. Screw, Backplate Vent, SHCB, ⅜-16 x 1½", Chrome Plated **170-0045**±
17. Washer,Flat, ,Nitrile Rubber Coated, .380" x .880" x .024"
    - *each* **50-7054**
    - *10 pack* **50-7059**
18. Gasket,Backplate
    - Stock CV Carb & EFI Throttle Body, 1991-up bt *29062-95B* *(except Throttle by Wire)* **106-6022**
    - Throttle by Wire, 58mm-72mm, .0625"Thick, 2008-up bt . . **160-0035**
    - Super E/G,CV Adapter, ... **106-1724**
    - w/lanyards for use with Muscle Cover **170-0137**

± ⚠ WARNING: Cancer and Reproductive Harm – www.P65Warnings.ca.gov

SINGLE BORE TUNED INDUCTION SYSTEM REPLACEMENT PARTS
FOR S&S T-SERIES ENGINES AND 1999–'06 BIG TWINS

1. Tuned Intake Kit, 2.19" Single Bore with Red Filters
- Gloss Black **170-0454**
- Chrome Plated ..... **106-4967±**

2. Tuned Intake Assembly, 2.19" Single Bore
- Natural **106-4968**
- Gloss Black **170-0453**
- Chrome Plated ..... **106-4970±**

3. Air Filter, w/clamp, Stainless Cap – Conical – 2⁷⁄₁₆" I.D. x 4"
- Red *(each)* **17-1020**
- Blue *(each)* **17-1023**

4. Gasket, Intake – Adapter Plate **17-1022**

5. Plate, Adapter, 2.19" Single Bore Tuned Intake
- Chrome Steel **17-1014**

6. FHSC ¼-20 x ⅝" *(each)* **50-0433**

7. FHSC ⁵⁄₁₆-18 x ⅝" *(each)* **50-0432**

8. O-Ring, Adapter Plate Bracket 3⅝" O.D. x 3½" I.D. ⅛ CS, Viton
each **50-0446**

9. Bracket Kit, 2.19" Single Bore Tuned Intake, Chrome
- Super E/G, S&S T124 ..... **106-4973±**
- Super E/G,1999-'06 BT ..... **106-4974±**
- Single VFI, S&S T124 ..... **106-4976±**
- Single VFI, 1984-up BT ..... **106-4977±**
- Stock Carb, Delphi® EFI, 1984-up BT ..... **106-4978±**

10. Backplate Screw, SHC, w/Threadlock, ¼-20 x ½" *(each)* ... **106-2084**
10 pack **106-2105**

11. Screw, ⁵⁄₁₆ -18 x 1¼, BHC, Chrome *(each)* ..... **50-0309-S±**

12. Flat Washer ⁵⁄₁₆" x ⅛" *6320, 70907-07, 6016, 6702* **50-7034**

13. Hose, Breather, ¼" I.D., 90° **19-0178A**

14. Screw, Breather Fitting, ⅜ -16 x 1¼" **50-0436**

15. Washer, Flat, ⅜" x ¹³⁄₁₆" x ⅛", Chrome ..... **50-7106-S±**

16. Screw, Breather Fitting, ½ -13 x 1.25 ..... **50-0435**

17. Shim Kit
- (a) ⁵⁄₁₆" I.D. S&S 4⅛" engines **17-0314**
  Includes:
  - .325" x 1" x .018",Stainless Steel *(each)* **50-7038**
  - .325" x 1" x .030",Stainless Steel *(each)* **50-7039**
  - .325" x 1" x .048",Stainless Steel *(each)* **50-7040**
  - .325" x 1" x .105",Stainless Steel *(each)* **50-7041**
  - .325" x 1" x .125",Stainless Steel *(each)* **50-7042**
- (b) ½" I.D. 1993-up BT **17-0464**
  Includes:
  - .515" x 1" x .018",Stainless Steel *(each)* **50-7085**
  - .515" x 1" x .030",Stainless Steel *(each)* **50-7086**
  - .515" x 1" x .048",Stainless Steel *(each)* **50-7087**
  - .515" x 1" x .105",Stainless Steel *(each)* **50-7089**
  - .515" x 1" x .125",Stainless Steel *(each)* **50-7090**

18. Enrichment Device*, S&S Super E & G carbs ..... **N/A**
*(*Use in place of enrichment device on air cleaner backplate)*

19. Gasket, Backplate - E/G/SBEFI *(each)* **106-1724**
10 pack **106-2328**

20. Gasket, Backplate, S&S SBEFI 58mm **106-4662**

21. Gasket, Backplate, Stock carb/Throttle Body *29062-95B* **106-6022**

22. Hardware Kit
- 1999-'06 bt, Stock CV & EFI Delphi®
  (includes #7, 8, 10, 11, 12, 13, 14, 15, 16, 17a, 17b, 19, 21) **17-5098**
- 1999-'06 bt, Super E/G
  (includes #7, 8, 10, 11, 12, 13, 14, 15, 16, 17a, 17b, 18, 19, 21) **17-5099±**
- S&S 4⅛" Bore Heads *(includes #7, 8, 10, 11, 12, 13, 17a, 19)* .. **500-0016**

23. Oil, Air Filter, 8 oz. (Not shown)
- Red **106-1163**
- Blue **106-1164**

ACCESSORIES

Description		Part #
Nylon Air Filter Cover	*each*	**106-0247**
	2 pack	**106-0248**



All reference to HD® part numbers is for identification purposes only. We in no way are implying that any of S&S Cycle's products are original equipment parts or that they are equivalent to the corresponding HD® part number shown.

± ⚠ WARNING: Cancer and Reproductive Harm – www.P65Warnings.ca.gov

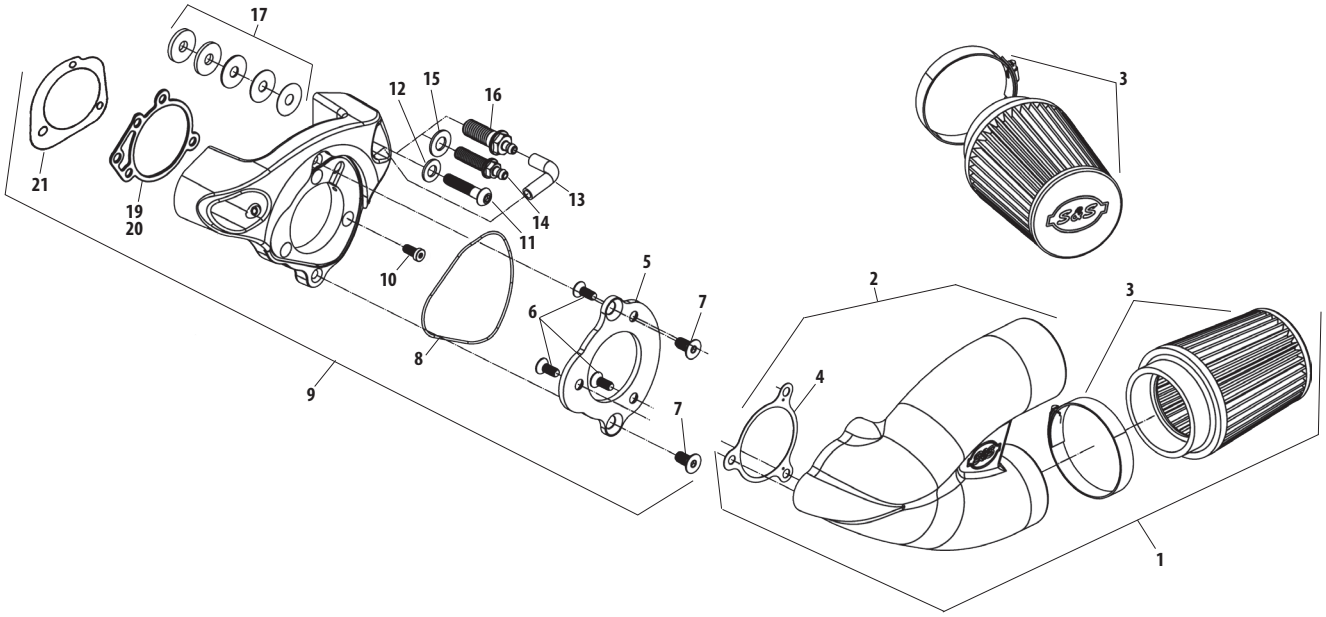
17
21
19
20
12
15
16
13
14
11
10
8
9
5
6
7
7
3
2
3
4
1

AIR CLEANER REPLACEMENT PARTS
FOR STOCK FUEL SYSTEMS

1. Air cleaner cover
- **a.** Chrome ..... **17-0078±**
- Black **17-0075**
- **b.** Chrome ..... **17-0378±**
- Gloss Black **170-0384A**
- Slasher ..... **17-0004±**

2. Filter Element
- a. Foam **17-0079**
- b. Pleated **106-4722**

3. Backplate
- 1993-'06 bt, stock CV/Delphi® EFI **106-0907**

4. Cover screw *1305 (each)* **50-0072**
- *3 pack* **50-1052**
- *10 pack* **50-0094**
- Black *902 (each)* **50-0310-S**
- *3 pack* **50-0310**

5. Screw
- b. All others – HHCS ¼"-28 x ⅞" **50-0074**

6. Backplate screw, BT 1999-up, All 2002-up EFI BT
- Zinc Plated *(each)* **106-2084**
- *10 pack* **106-2105**

7. Backplate plug ⅛"-27 *(each)* **50-8331A**
- *10 pack* **50-1015**

8. Spacer, 1/2" Hex, Threaded ..... **N/A**

9. Stud, Fully Threaded, 5⁄16-18 x 1.25", Zinc Plated, 1999-'01 ..... **N/A**

10. SHCS, ¼-20 x ¾ SEMS **50-0066**

11. Screw, SHCS,
- 1995-'98, ¼-20 x ¾", SEMS **50-0066**
- 1999-'01, 5⁄16-18 x ¾" *3275 (each)* **50-0302-S**

12. Shims
- a. ⅝" x .025" *(each)* **50-7113**
- *10 pack* **50-7110**
- b. ⅝" x .050" *(each)* **50-7114**
- *10 pack* **50-7111**
- c. ⅝" x .075" *(each)* **50-7115**
- *10 pack* **50-7112**

13. Breather screw seal
- a. BT 1993-'99, All 2002 EFI BT – Washer, .520 *(each)* **50-7055**
- *10 pack* **50-7057**
- b. BT 1999-up, All 2002 EFI BT – Washer, .380 *(each)* **50-7054**
- *10 pack* **50-7059**

14. Breather fitting *(each)* **17-0350**
- *2 pack* **17-0355**

15. Crankcase breather vent hose, BT 1999-up ..... USA 1,2 **17-0339**

16. Vent hose, with angle cut **17-0365**

17. Hose fitting **17-0336C-S**

18. Hose, vent, breather, formed,
- .250" x .375" x 1.825", 1993-2007 BT *(each)* **17-0364A**

19. Flatwasher, ¼" *6194, 6245, 6703, 6736, 6228W, 6192 (each)* **50-7021**

20. Washer, Lock, .250" *7035, 7036* **50-7019**

21. Screw, SHCS, ¼-20 x 1¼" *(each)* **50-0008**

22. Support bracket locknut - ¼"-28 x ⅞" *(each)* **50-5010**

23. Lockwasher, 5⁄16" **50-7032**

24. Rubber tubing - ¼" x ⅝" x 3' ..... USA **N/A**

25. Washer, flat - ⅜" x ⅞" x .146" *(each)* **50-7053**

26. Washer, Flat, .375" x .875" x .146", Zinc, Steel *(each)* **50-7053**

27. Support bracket
- a. 1999-up bt & EFI Softail® 2001 ..... **N/A**
- b. 1995-2001 bt, Air Cleaner To Head, Nickel Plated **106-1285**

28. Shim - ¼" x ¾" x .200" **50-7024**

29. Screw vent fitting, BT 1999-up **17-0345**

30. Screw, Breather, +.250" (Rear Head) **17-0348**

31. Screw, Backplate (Rear Head), Socket Panhead
- 5⁄16-24 x .360", Zinc, Alloy Steel **17-0346**

32. Screw, Backplate Vent (Front Head)
- 1999-'01, 5⁄16-18 ..... **17-0345**

33. Screw, LSHC 5⁄16-24, x ½" Stainless SteelFront Head **106-2023**

34. Cover, Breather Screw, Chrome, Aluminum, Front Head ..... **106-2022±**

35. Gasket, backplate *(each)* **106-1724**
- *10 pack* **106-2328**

36. Adaptor assembly, 1993-'06 bt ..... **106-0881±**

37. Clamp, spring, 9⁄16" **50-8001**

38. Clamp, Spring, .660" *(each)* **50-8076-S**

39. Wire tie **(N/S)** **50-8003**

(N/S) = Not Shown

All reference to HD® part numbers is for identification purposes only. We in no way are implying that any of S&S Cycle's products are original equipment parts or that they are equivalent to the corresponding HD® part number shown.

± WARNING: Cancer and Reproductive Harm – www.P65Warnings.ca.gov

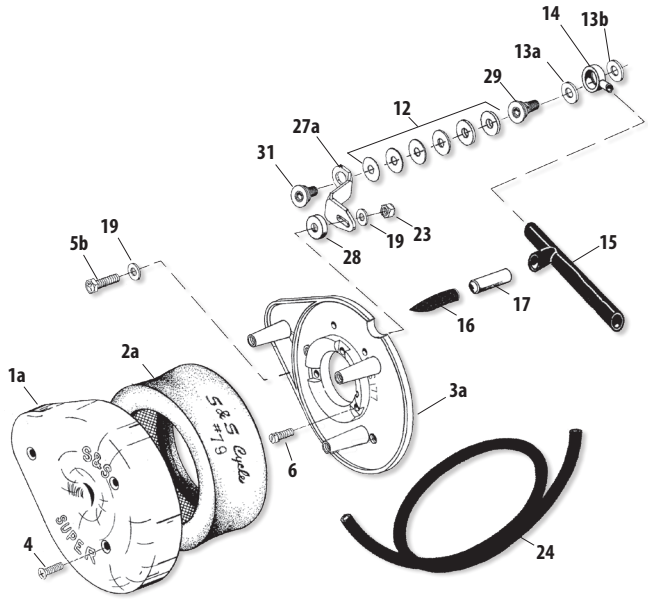

1999–Up big twin with CV Carburetor, 2001 Harley-Davidson® EFI Softail®, & All 2001–'06 EFI Models except Dyna® (Discontinued) **17-0101**

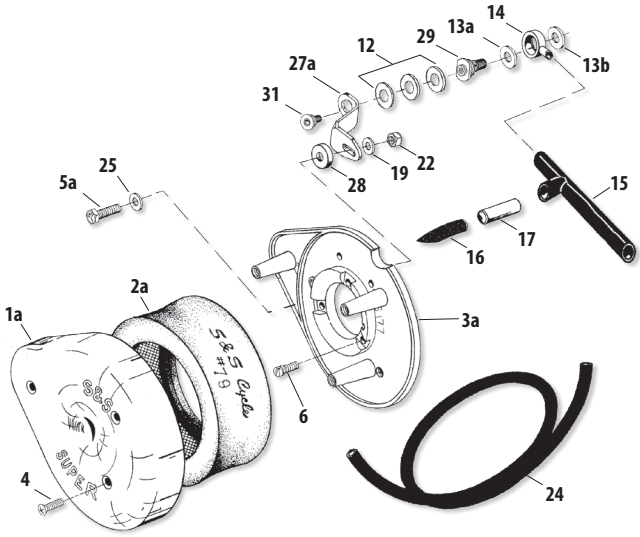

1993–'06 Carbureted big twin models, 2001 EFI Softail® Models, and 2002–Up All EFI Models (except 2006–Up Dyna®) (Discontinued) **17-0117**

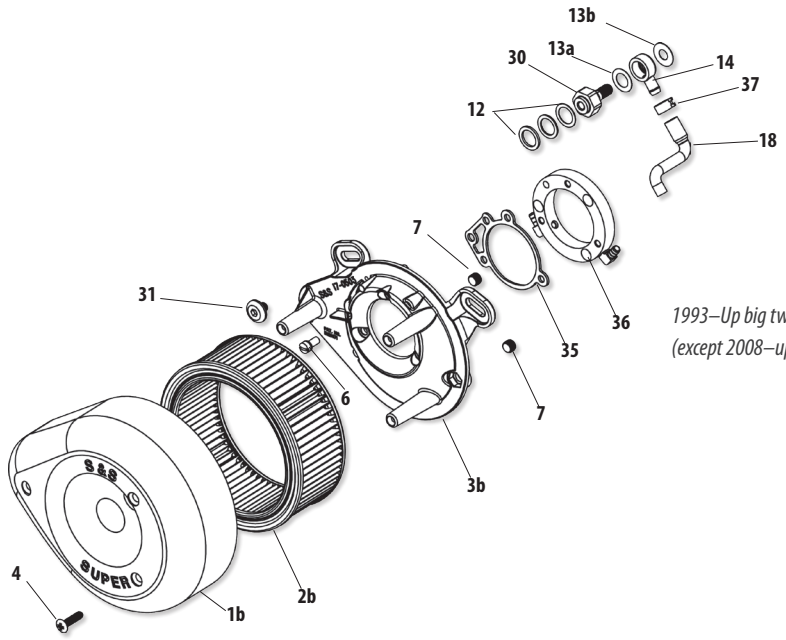

1993–Up big twin stock cv and Delphi® Single Bore EFI (except 2008–up touring models) **17-0450±**

SUPER E & G AIR CLEANER REPLACEMENT PARTS
FOR 1999–'06 BIG TWINS

1. Air cleaner cover –
- Chrome ..... **17-0378±**
- Gloss Black **170-0384A**
- Slasher ..... **17-0004±**

2. Filter Element
- Pleated **106-4722**
- Pleated Carbon **17-0375**

3. Backplate
- 1999-'06 bt ..... USA 1,2 **17-0336**
- 4⅛" Bore (*Manufactured after 1-1-03*) ..... USA 3 **17-0387**

4. Cover screw
- Chrome *(each)* ..... **50-0347-S±**
- Stainless Steel *1305 (each)* **50-0072**
  - *10 pack* **50-0094**
- Black *902 (each)* **50-0310-S**
  - *3 pack* **50-0310**

5. Backplate screw, Zinc Plated *(each)* **106-2084**
- *10 pack* **106-2105**

6. Backplate plug ⅛"-27 *(each)* **50-8331A**
- *10 pack* **50-1015**

7. Screw vent fitting – BT 1999-'06 except 06 Dyna® **17-0345**

8. Screw, air cleaner to head **17-0346**

9. Fast idle friction washer *(each)* **50-7035**
- *10 pack* **50-7058**

10. Fast idle steel washer *(each)* **50-7037**
- *10 pack* **50-7061**

11. Fast idle nylon washer *(each)* **50-7036**
- *10 pack* **50-7060**

12. Fast idle lever ..... USA 1,2,3 **17-0329**

13. Fast idle brass washer *(each)* ..... **50-7007±**
- *10 pack* ..... **50-7010±**

14. Fast idle lever screw (one required for current backplate)
- *each* **50-0041**
- *10 pack* **50-0062**

15. Shim, .850" x .325" x .400"
S&S 4⅛" Bore **50-7027**

16. Shims
a. S&S 4⅛" Bore, .325" x 1" x
- .018" *(each)* **50-7038**
- .030" *(each)* **50-7039**
- .048" *(each)* **50-7040**

b. BT 1993-'06, .625" x .880" x
- .025" *(each)* **50-7113**
  - *10 pack* **50-7110**
- .050" *(each)* **50-7114**
  - *10 pack* **50-7111**
- .075" *(each)* **50-7115**
  - *10 pack* **50-7112**

17. Screw vent fitting
b. BT 1999-up. **17-0345**

18. Washer, silicone coated steel
- BT 1999-up, .520" *(each)* **50-7055**
  - *10 pack* **50-7057**
- BT 1999-up, .380" *(each)* **50-7054**
  - *10 pack* **50-7059**

19. Breather fitting *(each)* **17-0350**
- *2 pack* **17-0355**

20. Crankcase breather hose, BT 1993-'99 ..... USA 1,2 **17-0339**

21. Flatwasher – 5⁄16" x 1⁄16" *6320, 70907-07, 6016, 6702* **50-7034**

22. Mounting bracket bolt, S&S 4⅛" Bore, 5⁄16"-18 x 1¼" **50-0110**

23. Spring clamps **50-8001**

24. Clamp,Hose,Bolt Style,⅝" - ⅞" **50-8002**

25. Plate, air cleaner noise reducer **17-0389**

26. Plate, Restrictor, Super E/G TÜV, 1999-up bt ..... **N/A**

27. Rubber isolator mounts *(each)* **50-8510-S**

28. Shim, spacers, ½" OD x ¼" ID x .080" *(each)* **50-7971-S**

HARDWARE KITS

29. For Super E/G,1999-up bt ..... **17-0437±**
For Super E/G, 4-⅛", 1984-'99 bt ..... **17-0460±**

All reference to HD® part numbers is for identification purposes only. We in no way are implying that any of S&S Cycle's products are original equipment parts or that they are equivalent to the corresponding HD® part number shown.

± WARNING: Cancer and Reproductive Harm – www.P65Warnings.ca.gov

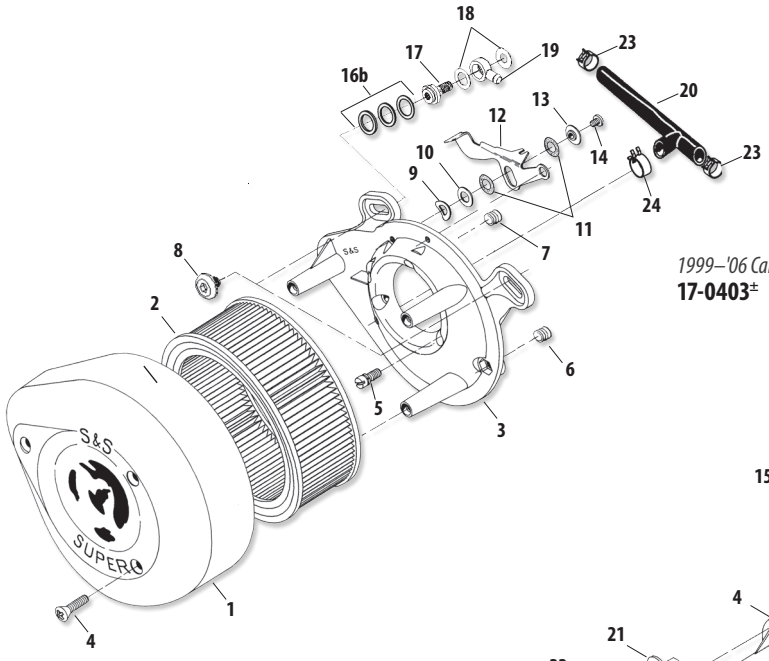

1999–'06 Carbureted Harley-Davidson® Twin Cam 88®
17-0403±

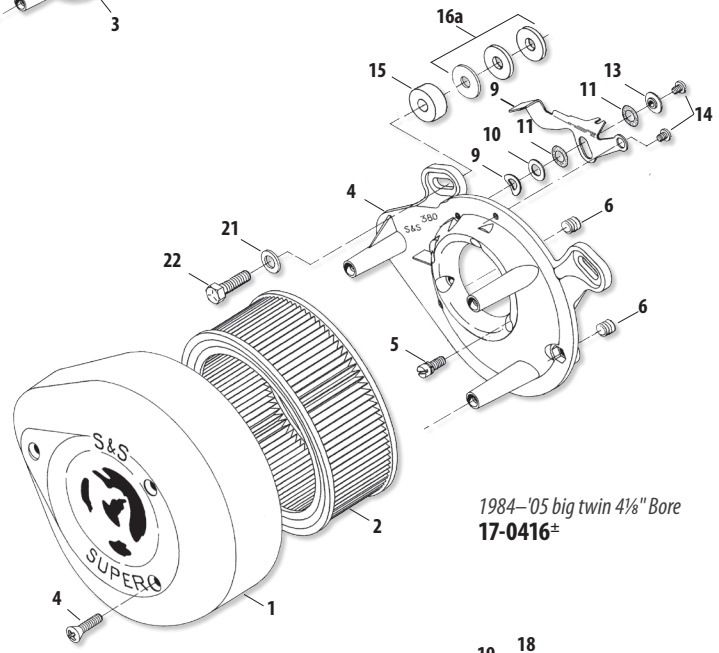

1984–'05 big twin 4⅛" Bore
17-0416±

NOTE

The line drawing is used for illustration purposes only. Not all of the parts shown are included and used in every carb installation.

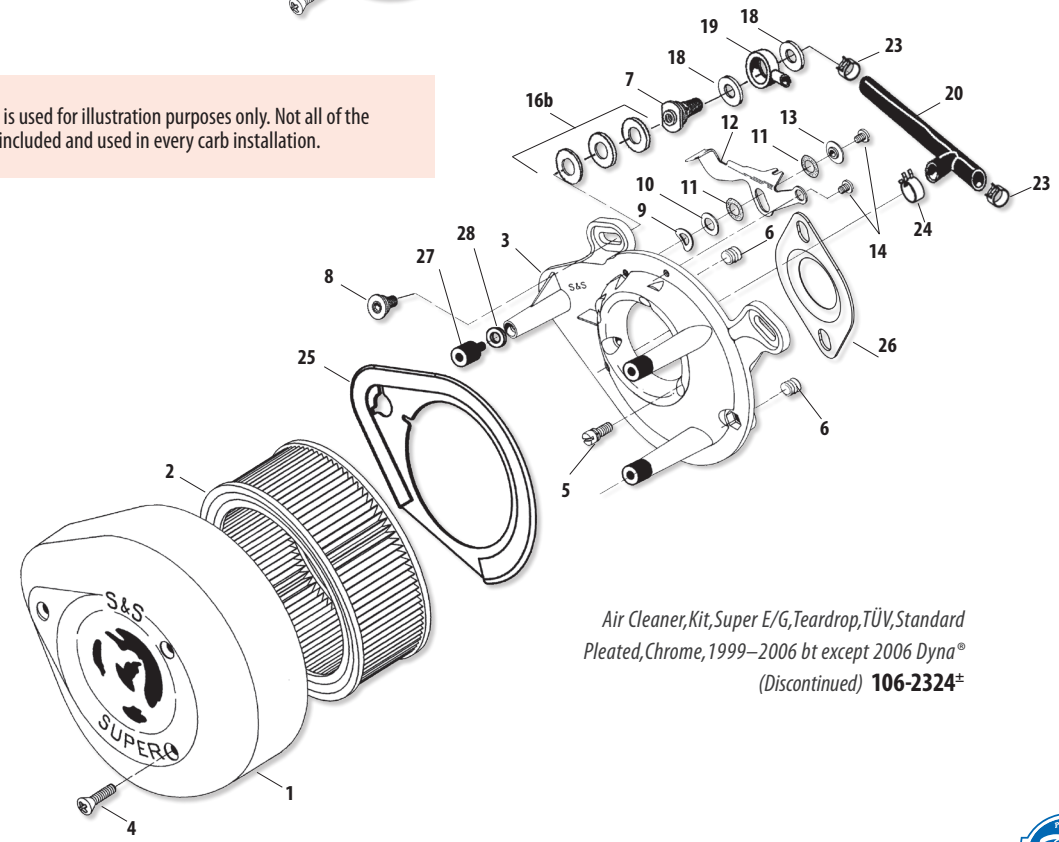

Air Cleaner,Kit,Super E/G,Teardrop,TÜV,Standard Pleated,Chrome,1999–2006 bt except 2006 Dyna® (Discontinued) **106-2324±**

CLASSIC TEARDROP AIR CLEANER REPLACEMENT PARTS
FOR S&S® SINGLE BORE EFI

1. Air Cleaner Cover
   - Slasher ***(slotted chrome)*** ..... **17-0004**±
   - Chrome ..... **17-0378**±
   - Gloss Black **170-0384A**
2. Element, pleated **106-4722**
3. Backplate SBFFI
   - BT 1999-up **17-0120**
   - S&S 4⅛" bore engines **17-0380**
4. Screw, Cover, oval ¼-20 x 1
   - Chrome ***1305*** *(each)* ..... **50-0072**±
   - *3 pack* ..... **50-1052**±
   - *10 pack* ..... **50-0094**±
   - Black ***902*** *(each)* **50-0310-S**
   - *3 pack* **50-0310**
5. Backplate screw
   - Zinc Plated *(each)* **106-2084**
   - *10 pack* **106-2105**
6. Pipe plug, ⅛, air cleaner backplate *(each)* **50-8331A**
   - *10 pack* **50-1015**
7. Mounting bracket bolt, hex 5⁄16-18 x 1¼ **50-0110**
8. Flat washer, 5⁄16" x 1⁄16" ***6320, 70907-07, 6016, 6702*** **50-7034**
9. Shim, .850" x .325" x .400" **50-7027**
10. Shim kit for 4⅛" bore **17-0314**
    Individual shims, .325" x 1" x
    - .018" *(each)* **50-7038**
    - .030" *(each)* **50-7039**
    - .048" *(each)* **50-7040**
    - .105" *(each)* **50-7041**
    - .125" **50-7042**
    - *2 pack* **50-7042P**
11. Screw, cable guide & air cleaner backplate, 10-24 x ¼ *(each)* **50-0041**
    - *10 pack* **50-0062**
12. Breather hardware for 4⅛" bore **31-2104**
    (Not included in air cleaner kit)
13. Shims, individual
    - ⅝ x ⅞ x .025 *(each)* **50-7113**
    - *10 pack* **50-7110**
    - ⅝ x ⅞ x .050 *(each)* **50-7114**
    - *10 pack* **50-7111**
    - ⅝ x ⅞ x .075 *(each)* **50-7115**
    - *10 pack* **50-7112**
14. Silicone washer, ½" ID *(each)* **50-7055**
    - *10 pack* **50-7057**
15. Silicone washer, ⅜" ID *(each)* **50-7054**
    - *10 pack* **50-7059**
16. Breather hardware for 1999-up bt **17-0455**
    (Not included in air cleaner kit)
17. Screw, wide head, 5⁄16-24 x .36 ..... **17-0346**
18. Air cleaner hardware kit **(N/S)**
    - BT 1999-up **17-0482**
    - S&S 4⅛" bore **17-0481**
19. Breather vent fitting, BT 1999-up **17-0345**
20. Breather fitting *(each)* **17-0350**
    - *2 pack* **17-0355**
21. Check Valve **50-8122**
22. Clamp,Spring,.660" **50-8076-S**
23. Clamp,Spring,.440" **50-8143-S**
24. Hose,Cut To Size,.1875" x 6",Black,Rubber,SAE 30R2 ... **50-8142AS**
25. Hose, Rear, Vent, Breather, Formed, Section 1, SAE J30.... **50-8262-S**
26. Hose,Rear,Vent,Breather,Formed,Section 2,SAE J30 ..... **50-8263-S**
27. Clamp,Spring,9⁄16" **50-8001**
28. Hose,Vent,Breather,Epichlorohydrin Polymer ..... USA 1,2 **17-0339**

(N/S) = Not shown

NOTE

Breather hardware not included in these air cleaner kits.

All reference to HD® part numbers is for identification purposes only. We in no way are implying that any of S&S Cycle's products are original equipment parts or that they are equivalent to the corresponding HD® part number shown.

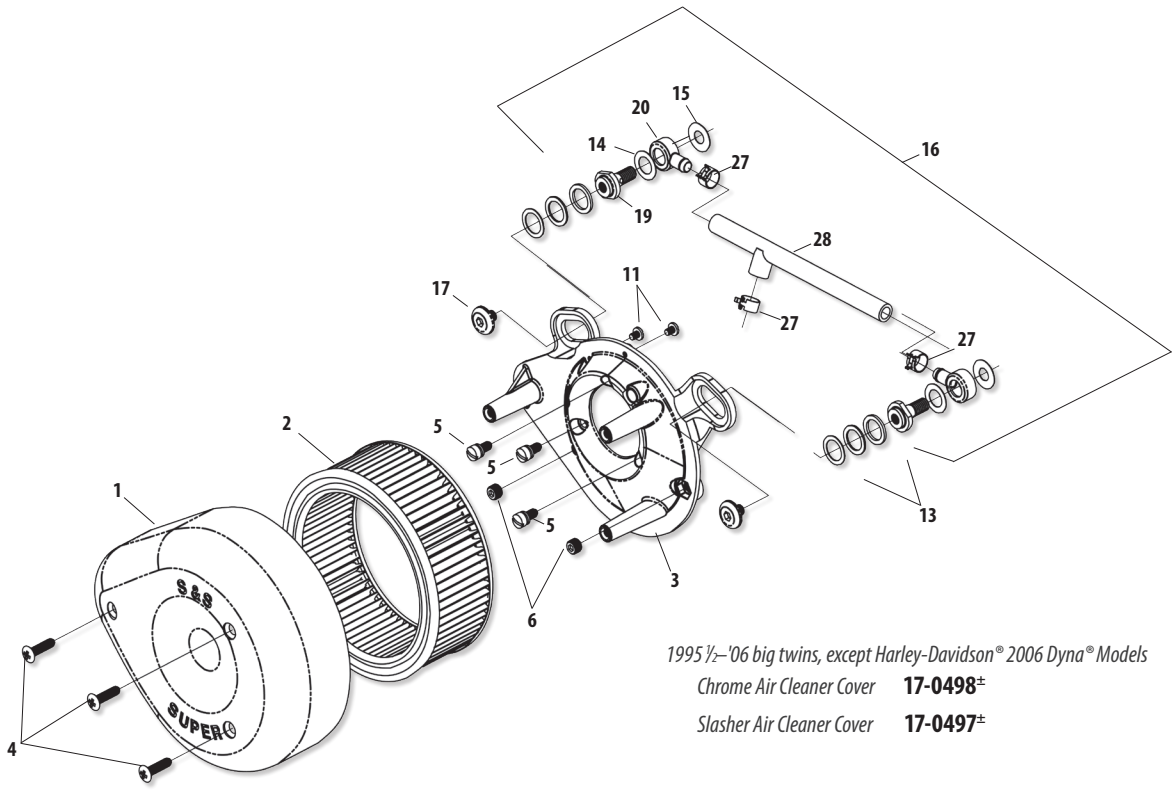

1995½–'06 big twins, except Harley-Davidson® 2006 Dyna® Models

Chrome Air Cleaner Cover **17-0498±**

Slasher Air Cleaner Cover **17-0497±**

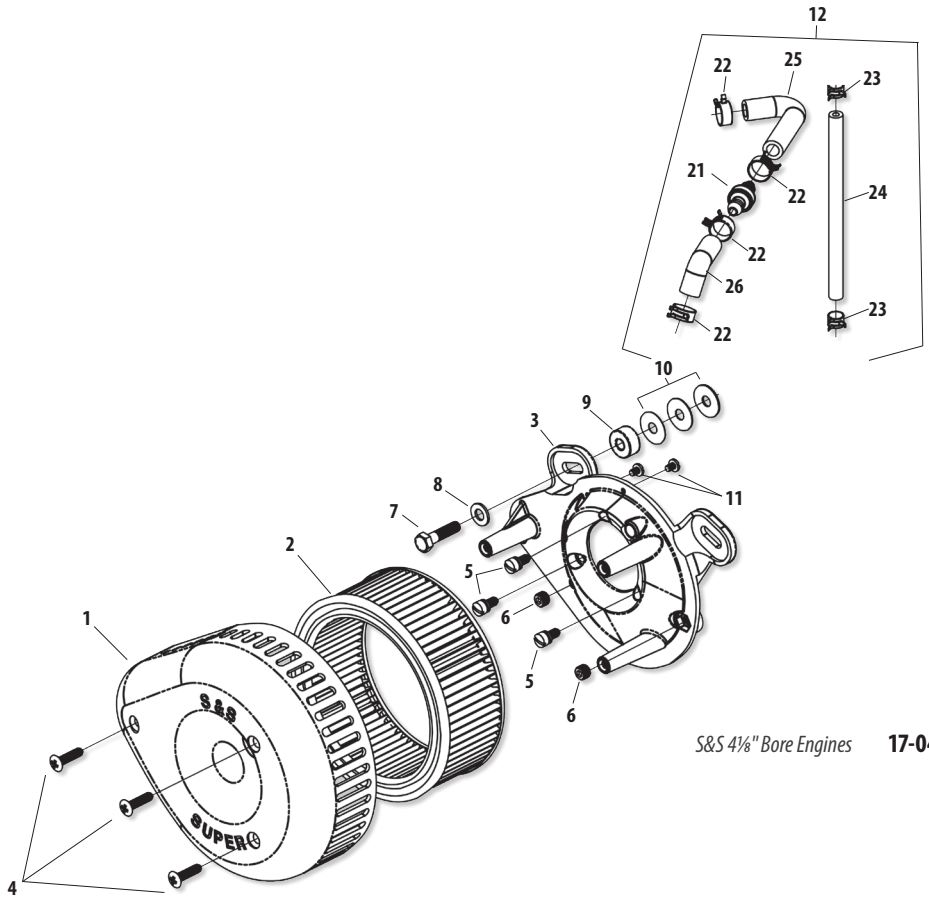

S&S 4⅛" Bore Engines **17-0496**

SINGLE BORE EFI THROTTLE BODY AND RELATED REPLACEMENT PARTS

1. Throttle body
   - 52mm 1995-'05 ..... **16-5101**
   - 52mm 2006-Up ..... CC **16-5153**
   - 58mm 1995-'05 ..... CC **106-3954**
   - 58mm 2006-Up ..... CC **106-3957**
2. Cap, canister purge (each) **50-8266-S**
3. Manifold (See page 196)
4. Cap, rubber, manifold, fitting **50-8372**
5. Throttle cable guide packet with hardware **55-5084**
6. Screw, cable guide & air cleaner backplate (each) **50-0041**
   10 pack **50-0062**
7. O-ring, throttle body to manifold **50-7967-S**
8. Intake air temperature sensor with hardware *27270-95* ..... USA **55-5041**±
9. Gasket, IAT **16-5009-S**
10. Screw, M3, IAT **50-0357-S**
11. Idle air control motor SS EFI with hardware, 1995-'05 *27628-01, 27628-01A* ..... USA **55-5085**±
12. O-ring, IAC **50-8149-S**
13. Screw, 10-24, IAC
    - 1995-'05 *(each)* **50-0356-S**
    - 2006-Up *(each)* **50-0358-S**
14. Fuel rail kit
    - 2006-'16 (Fuel inlet tube included) **16-5202**
    - 2002-'05 (Fuel inlet tube not included) **16-5203**
    - 1995-'01 ..... **16-5207**
15. Tube clip, fuel rail inlet 2001-'07
    each **50-0391-S**
16. O-ring, fuel rail inlet, 2001-'07 *27237-95*
    each **50-8137-S**
17. Backing washer, fuel rail inlet
    2001-'07 ..... **50-0349-S**
18. Screw, rail, 1995-Up
    each **50-0039**
    10 pack **50-0146**
19. Fuel injector
    each **55-5052A**
    2 pack **55-5052**
20. O-ring, injector top, black **50-8264-S**
21. O-ring, injector bottom, orange **50-8265-S**
22. Throttle position sensor ..... **N/A**
23. Screw, TP sensor & fuel rail
    each **50-0358-S**
25. MAP sensor *32424-98, 32416-10, 32417-10* ..... USA **55-1090**
26. Screw, throttle body to manifold
    each **50-0359-S**
27. Washer, lock , #10,
    throttle body to manifold **50-7000**
28. Gasket, backplate
    - 52mm *(each)* **106-1724**
    - *10 pack* **106-2328**
    - 58mm *(each)* **106-4662**
29. Harness, injector adapter kit
    - 1995-'05 ..... **55-5074**
    - 2006-Up **55-5209**
30. Fuel inlet tube 45°, 2002-up *27221-95* ..... USA **50-0485**
31. Spacer, throttle position – 2002-up **55-5201**
32. Pressure regulator, 1995-'01 ..... **16-5297**
33. Screw, pressure regulator, 6-32 x 3/16", 1995-'01 ..... **50-0279-S**
34. Clamps, Hose, ½" diameter, smooth, 1995-'01
    each **50-8352**
35. Plug, assembly, MAP sensor hole, 1995-'01 ..... **50-8350**
36. O-ring, MAP plug, 1995-'01
    each **50-8133-S**

(N/S) = Not Shown

All reference to HD® part numbers is for identification purposes only. We in no way are implying that any of S&S Cycle's products are original equipment parts or that they are equivalent to the corresponding HD® part number shown.

± WARNING: Cancer and Reproductive Harm – www.P65Warnings.ca.gov

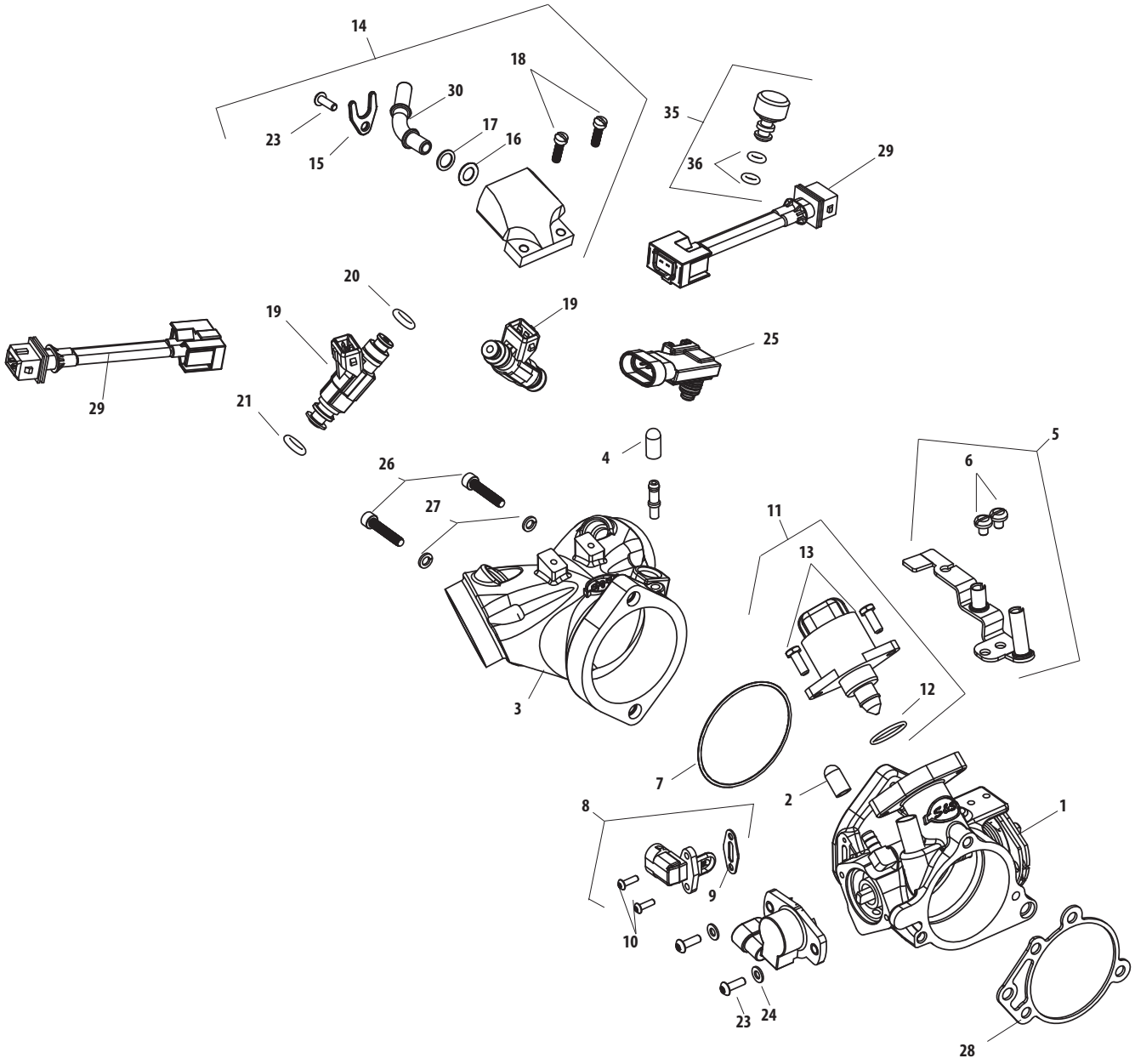
14
18
30
23
15
17
16
35
36
29
20
19
19
25
29
21
4
26
27
5
6
11
13
12
3
7
8
2
1
9
10
23
24
28

SUPER E & G CARBURETOR REPLACEMENT PARTS

1. Carb body assembly
1⅞" Super E ..... USA 1,2,3 **11-2381±**
2⅛" Super G ..... **11-2391±**

2. Throttle shaft
1⅞" Super E – Includes two plate screws **11-2383**
2⅛" Super G – Includes two plate screws **11-2483**

3. Throttle plate screw *11-2045- (two required) (each)* **50-0055-S**
10 pack **50-0064**

4. Throttle plate
1⅞" Super E **11-2055**
2⅛" Super G **11-2355**

5. Throttle return spring *(each)* **11-2382**
5 Pack ..... USA 1,2,3 **11-3502**

6. Throttle spool ..... USA 1,2,3 **11-2385**

7. Throttle shaft lock washer *(two required)* **50-7031**

8. Throttle shaft nut *(two required) (each)* **11-2350**
5 pack **11-2363**

9. Throttle shaft nylon washer *(each)* **50-7050**
10 pack **50-7072**

10. Pump actuator lever **11-2376**

11. Actuator spring *(each)* **11-2375-S**
5 pack ..... USA 1,2,3 **11-3501**

12. Pump actuator arm **11-2377**

13. Idle mixture screw
a. Idle mixture screw, brass *(each)* ..... **11-2354±**
5 pack ..... **11-2378±**
b. Idle mixture screw only
each **110-0003**
5 pack ..... **110-0069±**
Idle mixture screw w/500-0036 o-ring)
each ..... **110-0068±**

14. Idle mixture screw spring *(each)* **11-2052**
10 Pack ..... USA 1,2,3 **11-2060**

15. Idle speed screw *(each)* **50-0038**
10 Pack **50-0150**

16. Pump adjustment screw *(each)* **50-0039**
10 Pack **50-0146**

17. Idle speed/pump adjuster spring *(each)* **11-2048**
10 pack ..... USA 1,2,3 **11-2053**

18. Plunger nut *(each)* ..... **11-2344±**
5 Pack ..... **11-2372±**

19. Plunger spring *(each)* **11-2340**
10 Pack ..... USA 1,2,3 **11-2359**

20. Fast idle plunger **11-2343**

21. Cable guide assembly with screw
Use with butterfly style cables **11-2339P**
Use with constant velocity style cables **11-2338P**

22. Cable clamp/float pin screw *(each)* **50-0041**
10 Pack **50-0062**

23. O-ring
1⅞" Super E *(each)* **50-8016**
10 Pack **50-8094**
2⅛" Super G *(each)* **50-8015**
10 pack **50-8093**

24. Bellows seal *(each)* **11-2266**
5 Pack **11-2279**

25. Bowl vent plug *(each)* **50-0105**
10 pack **50-0151**

26. Main discharge tube ..... **11-2085±**

27. Main jet – See Chart on 202

28. Intermediate Jets – See Chart on 201
Series #94 fits all Super 1⅞", 2⅛", 2¼" gas carburetors.

29. Bowl gasket *(each)* **11-2386**
10 pack **11-2387**

30. Float **11-2187**

31. Float pin *(each)* ..... **11-2369±**
5 Pack ..... **11-2370±**

32. Bowl screw
10-24 x ¾" - *Three required (each)* **50-0034**
10 Pack **50-0063**
10-24 x 2⅜" - *One required (each)* **50-0040**
10 Pack **50-0061**

33. Carb bowl only ..... USA 1,2,3 **11-2388±**
Carb bowl assembly ..... USA 1,2,3 **11-2388P**

34. Bowl plug *(each)* **11-2090**
5 pack ..... **11-2092±**

35. Seat o-ring* *(required with part #11-2465 only when replaces 360° style fuel inlet.)*
each **50-8009**
10 pack **50-8095**

36. Needle
1⅞" Super E & 2⅛" Super G ..... USA 1,2,3 **11-2195±**
Racing only ..... **11-2197±**

37. Seat - Includes O-ring #35
(Replaces obsolete seats 11-2347 and 11-2348)
a. 1⅞" E & 2⅛" G *(Uses part #11-2195± needle)* **11-2465**
b. Racing only *(Uses part #11-2197± needle)* ..... **N/A**
c. Racing only -threaded fuel inlet (6AN .157" ID)
(Uses part #11-2195± needle) **11-2395**
d. Permeation Compliant fuel inlet seat Super E or G
(Uses part #11-2195± needle) ..... USA 1,2,3 **106-2011**

38. Ejector nozzle o-ring *(each)* **50-8011**
10 Pack **50-8096**

39. Pump pushrod *(each)* **11-2373**
5 Pack ..... USA 1,2,3 **11-2393**

40. Check ball - *(two required) (each)* **50-8090**
10 pack **50-8125**

41. Check ball spring *(each)* **11-2374**
5 Pack ..... USA 1,2,3 **11-2392**

42. Pump cap o-ring - *(two required) (each)* **50-8012**
10 Pack **50-8100**

43. Pump cap assembly ..... USA 1,2,3 **11-2389**

44. Overflow hose per 24" *27369-76 (each)* ..... USA **19-0262-S**
5 Pack ..... USA **19-0263**

45. Pump cap screw 8-32 - *(two required) (each)* **50-0042**
10 Pack **50-0098**

46. Diaphram spring *(each)* **11-2275**
10 pack ..... USA 1,2,3 **11-2278**

47. Diaphragm **11-2282**

48. Gasket, backplate *(each)* **106-1724**
10 pack **106-2328**

49. Enrichment device *(Use with air horn only)* ..... **11-2084±**

50. Fuel line
a. With 90° bend*19" ..... **N/A**
b. Permeation Compliant Straight, 311" x .563" x 17.5"
(Use with part #106-2011 , 90° seat) **190-0001**

51. Fuel line insulator – 12" ..... USA 1,2,3 **19-0172**

52. Spacer, Kit, w/O-ring
1⅞" x 1" **16-0057***
2⅛" x 1" **16-0357***
2¼" x 1" **16-0157***
*Use with 1" Spacer Block **16-0058**

53. Insulator Block,Manifold,w/O-ring
1⅞" x ¼" Super E **16-0491**
1⅞" x ⅜" Super E **16-0497**
2⅛" x ¼" Super G **16-0492**
2⅛" x ⅜" Super G **16-0498**
2¼" x ¼" Super D **16-0499**

54. Screw
1" x ⅜"-16 *(each)* **50-0161**
1¼" x ⅜"-16 *(each)* **50-0162**
10 pack **50-0177**
1⅜" x ⅜"-16 *(each)* **50-0163**
5 pack **50-0178**
2" x ⅜"-16 *(each)* **50-0164**

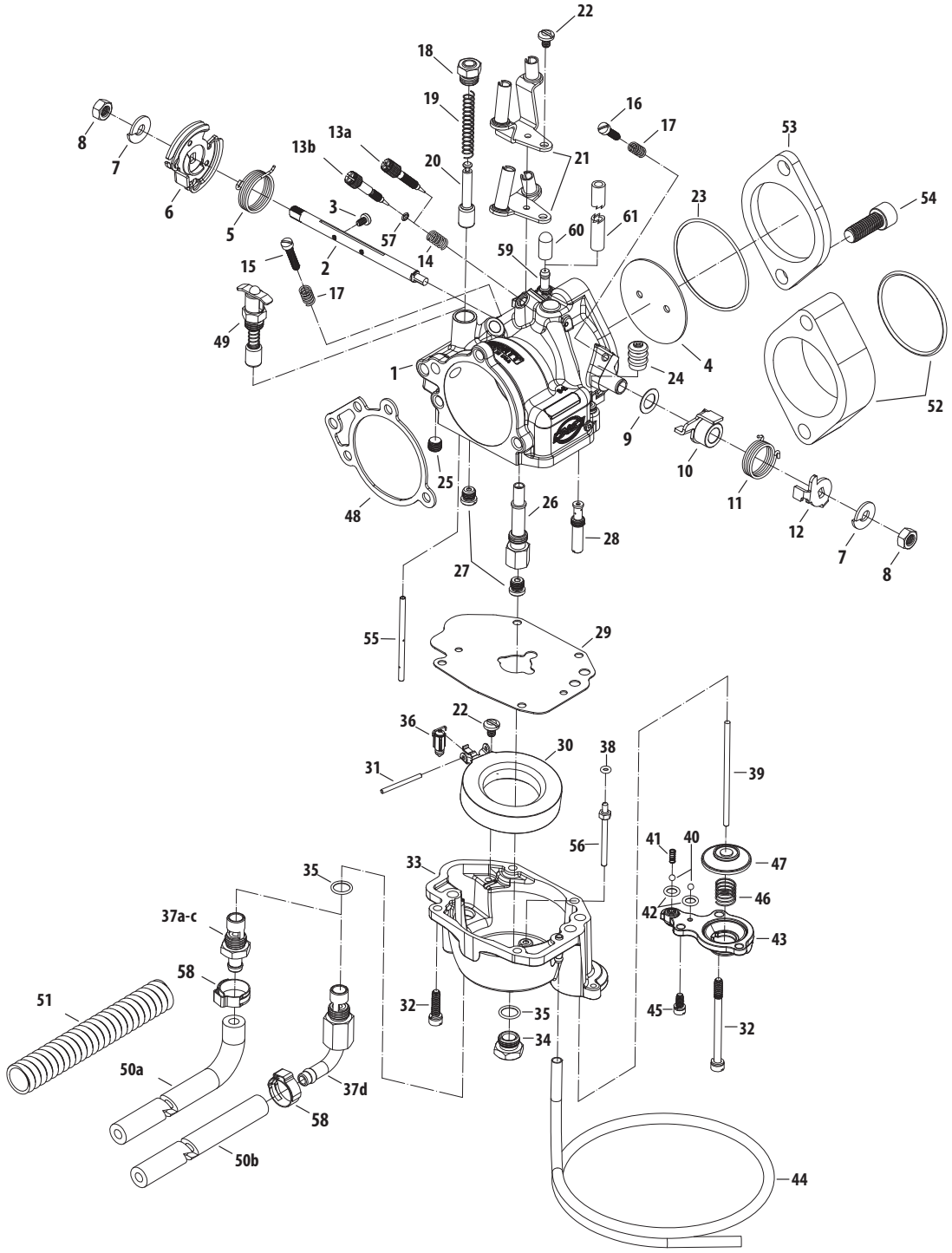

	5 pack	**50-0185**
	1¼" x ¼"-20 *4740A, 3482A (each)*	**50-0008**
	1½" x ¼"-20 *4718A*	**50-0079**
	2¼" x ¼"-20 *4717A*	**50-0078**
55.	Tube,Fast Idle Pick-Up,Super E/G,.125" x 2.350",Brass	**0381F±**
56.	Tube,Ejector Nozzle,Super E/G,Flared,Brass	**106-6124±**
57.	O-ring, 3mm x 5mm x 1mm *(each)*	**500-0036**
	10 pack	**500-0148**
58.	Clamp, ⅝" - ⅞"	**50-8002**
59.	Hose, Fitting straight, .040"	**16-0134**
60.	VOES Fitting Cap	**50-8372**
61.	VOES/Oil Return Hose	**19-0395**

**360° banjo style fuel inlet fitting used on early S&S E&G carbs is no longer available. Replace with one of the inlet/seat fittings listed under #37 on this page. We highly recommend inlet/seat #106-2011.*

± ⚠ WARNING: Cancer and Reproductive Harm – www.P65Warnings.ca.gov

CARBURETOR REBUILD KITS
SEE PAGE 202

All reference to HD® part numbers is for identification purposes only. We in no way are implying that any of S&S Cycle's products are original equipment parts or that they are equivalent to the corresponding HD® part number shown.

CRANKCASE BREATHER REED VALVE
REPLACEMENT PARTS

1. Valve,Assembly,Breather Reed
Engines with Stock Oil Pumps
1999-'02 bt with stock or S&S Super Stock crankcases **31-2070**
2003-'10 bt with stock or S&S Super Stock crankcases **310-0742**
S&S SA Crankcases **310-0742**
Engines with S&S gear oil pumps
2003-up bt w/stock crankcases and all S&S crankcases **310-0742**

2. O-ring
1999-'02 bt (-038),2.614" ID x 2.750" OD,Viton® ... **50-8154-S**
2003-up bt (-036),2.364" ID x 2.500" OD,Viton® **50-8155-S**

3. Seal,Breather Reed Valve,1999-up bt **31-4086**

4. Stop,Breather Reed Valve,Packaged,1984-up bt ..... **N/A**

5. Reed,Breather Valve,bt *(each)* **31-2072-S**

6. Screw,Torx BH,4-40 x ¼",Black,Alloy Steel *(each)* **50-0305-S**

7. Wave Spring ,2"OD X 1.6"ID X .375" **50-8404**

8. Spring Adaptor (for S&S SA Crankcases) **(N/S)** **31-2103***

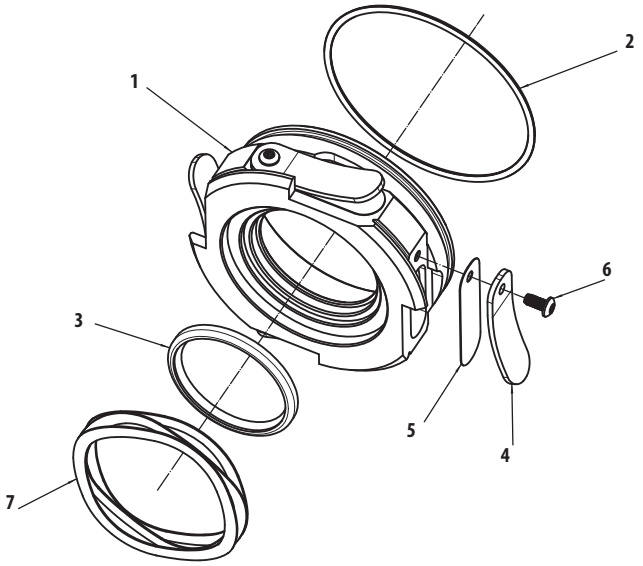

**Required to accommodate the extra .375" case width of S&S Special Application big bore crankcases.*

(N/S) = Not Shown

Mk45 4.5" MUFFLER REPLACEMENT PARTS

1. 4.5" Muffler Assembly
Left, Chrome ..... **551-0020±**
Right, Chrome ..... **551-0021±**
Left, Black **551-0022**
Right, Black **551-0023**

2. Endcap
Thruster, Chrome ..... **550-0634A±**
Thruster, Highlighted Machined **550-0629A**
Tracer, Chrome ..... **550-0636A±**
Tracer, Highlighted Machined **550-0632A**

3. Main Baffle Assembly, 4.5" Muffler **551-0007**

4. dB reducer **551-0026**

5. Insulation, 4.5" Muffler **551-0003**

6. Button Head Cap Screw, Stainless, ¼"-20X⅜" **500-0441**

7. Hardware Kit, Muffler Clamps And Screws (N/S) **551-0027**

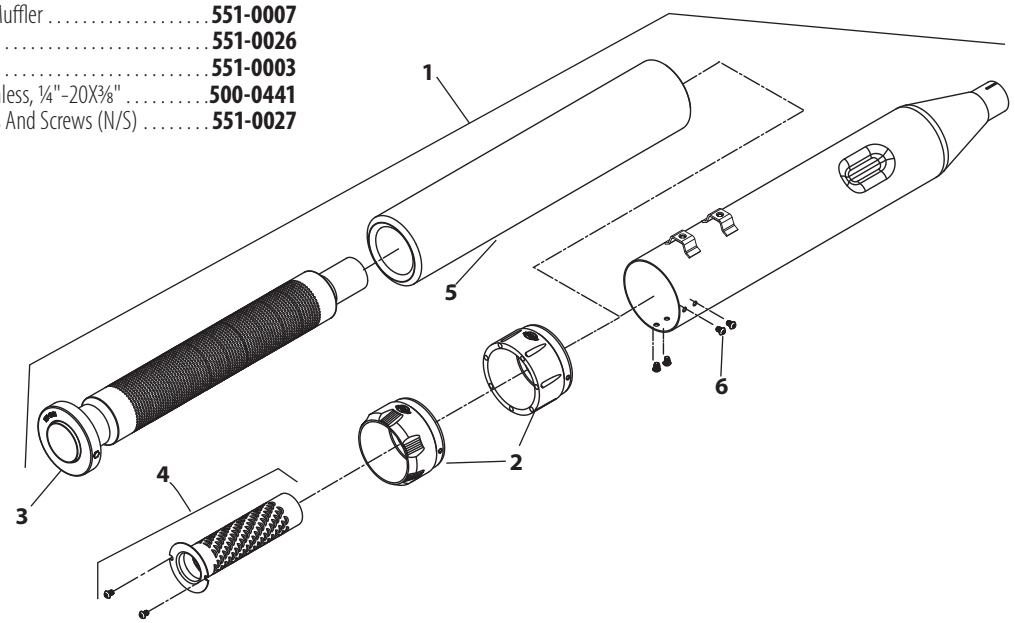

GRAND NATIONAL® 4" REPLACEMENT PARTS

1. 4" Muffler assembly with Grand National Endcap
- Left, Chrome. . . . . **551-0055±**
- Right, Chrome . . . . . **551-0056±**
- Left, Black. **551-0057**
- Right, Black **551-0058**

3. Endcap (Left and Right) **551-0291**
4. Main baffle assembly (Left and Right) **551-0053**
5. dB reducer baffle (Left and Right). **551-0063**
6. Button head cap screw, Stainless, ¼"-20x⅜" **500-0441**
7. Socket head cap screw, Stainless, 10-32x¾" **500-0569**
9. Hardware kit, muffler clamps and screws (N/S) **551-0027**

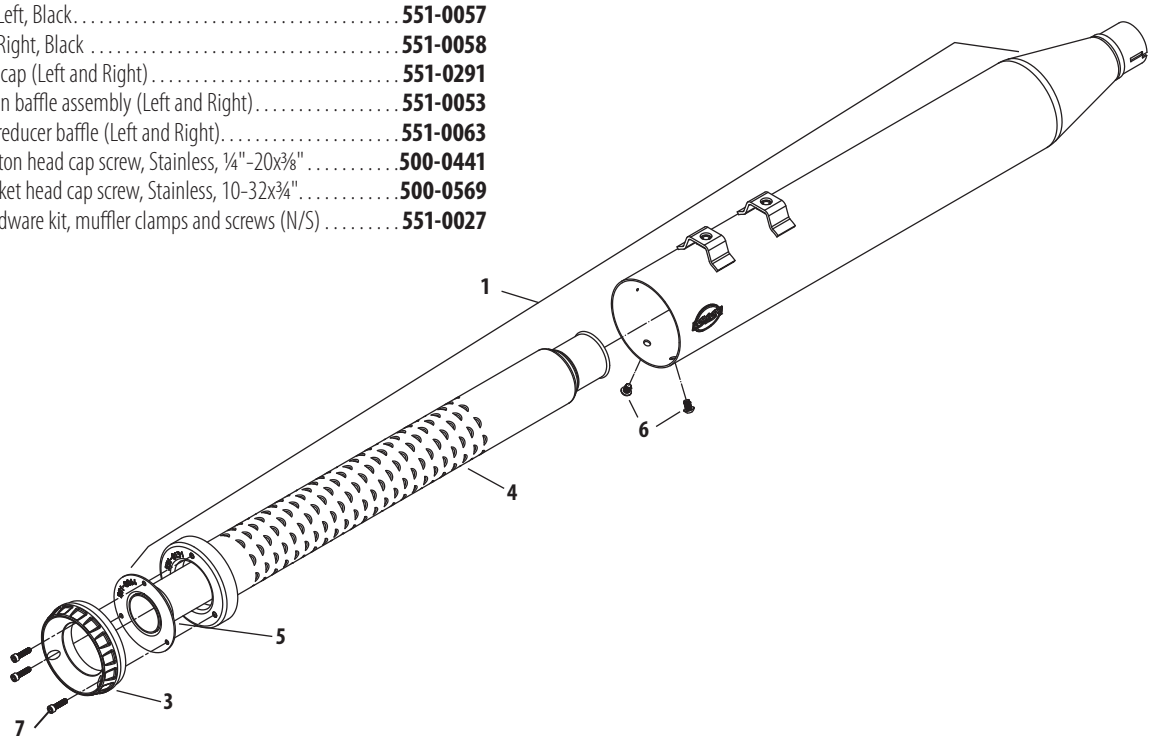

SLASH CUT 4" REPLACEMENT PARTS

1. 4" Muffler assembly Slash Down
- Left, Chrome. . . . . **551-0059±**
- Right, Chrome . . . . . **551-0060±**
- Left, Black. **551-0061**
- Right, Black **551-0062**

2. Main baffle assembly (Left and Right) **551-0053**
3. dB reducer baffle (Left and Right). **551-0063**
4. Button head cap screw, Stainless, 1/4"-20x3/8" **500-0441**
5. Button head cap screw, Stainless, 10-32x3/8" **500-0570**
6. Hardware kit, muffler clamps and screws **(N/S)**. **551-0027**

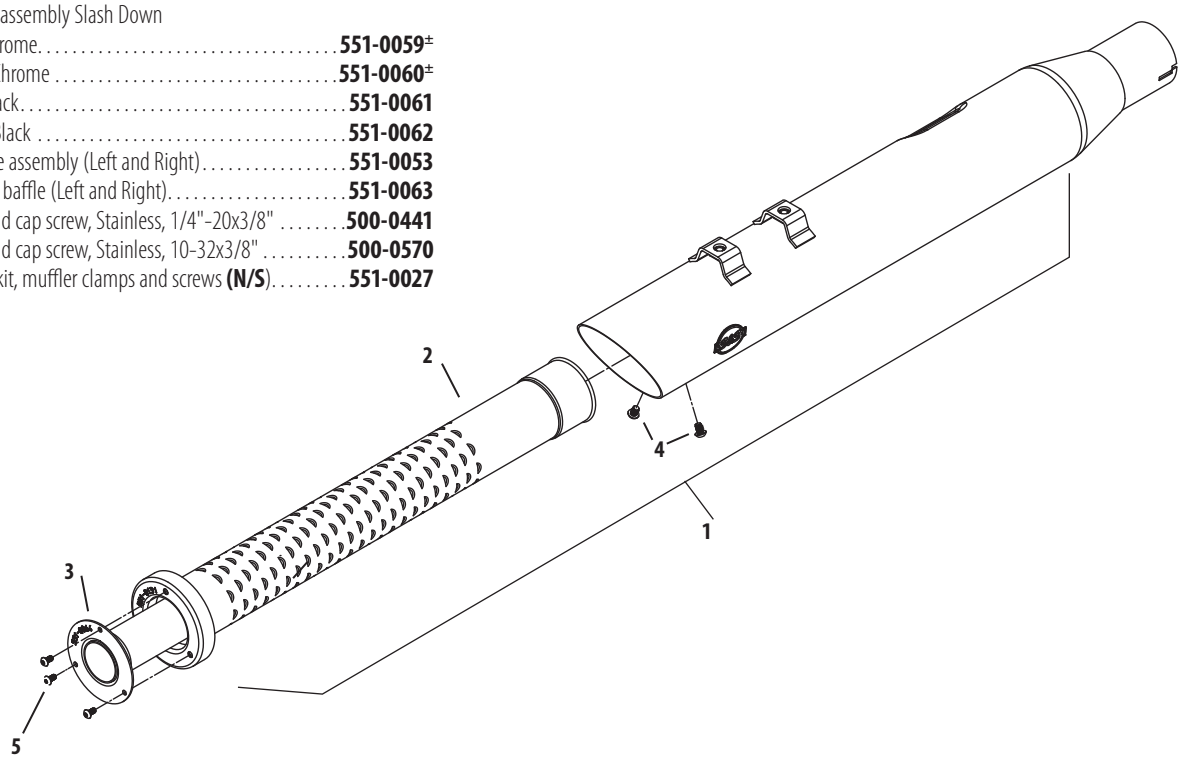

± WARNING: Cancer and Reproductive Harm – www.P65Warnings.ca.gov
WARNING: Cancer and Reproductive Harm – www.P65Warnings.ca.gov

SLASH CUT SLIP-ON MUFFLERS FOR DYNA® MODELS
REPLACEMENT PARTS

1. Slash Cut Muffler Assembly, Front or Rear
   - Chrome ..... **551-0308**±
   - Black **551-0311**
2. Main Baffle Assembly **551-0301**
3. dB Reducer **551-0350**
4. Button head cap screw, Stainless, ¼"-20x3/8"1
   (Hold Main baffle assy to muffler shell) **500-0441**
5. Socket head cap screw, Stainless, 10-32x3/8"
   (Hold db killer baffle to main baffle assy) **500-0570**

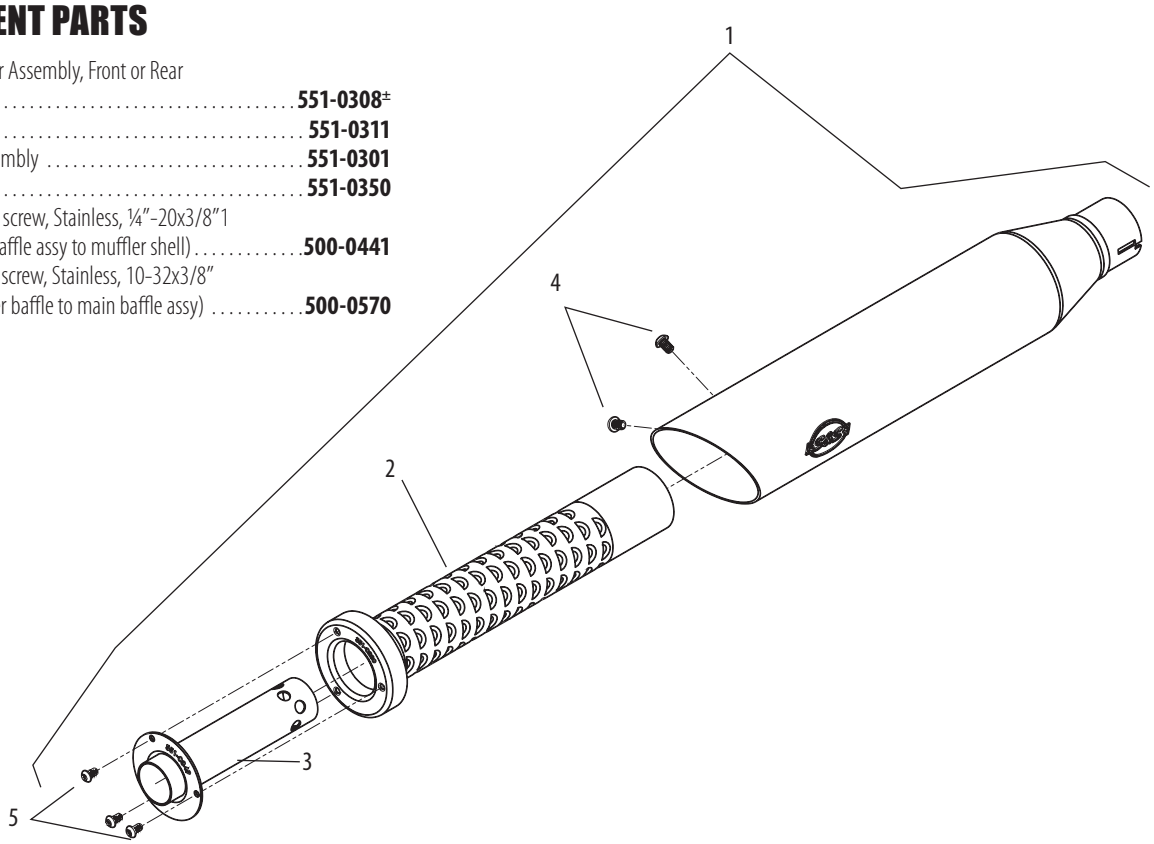

GRAND NATIONAL® SLIP-ON MUFFLERS FOR DYNA® MODELS
REPLACEMENT PARTS

1. Muffler Assembly Front or Rear
   - Grand National, Chrome ..... **551-0314**±
   - Grand National, Black **551-0317**
2. Endcap **551-0292**
3. Main Baffle Assembly **551-0299**
4. dB Reducer **551-0304**
5. Button head cap screw, Stainless, ¼"-20x3/8"
   (Hold Main baffle assy to muffler shell) **500-0441**
6. Socket head cap screw, Stainless, 10-32x3/4"
   (Hold Endcap to main baffle assy) **500-0569**
7. Insulation, Muffler, Pillow Pack **551-0305**

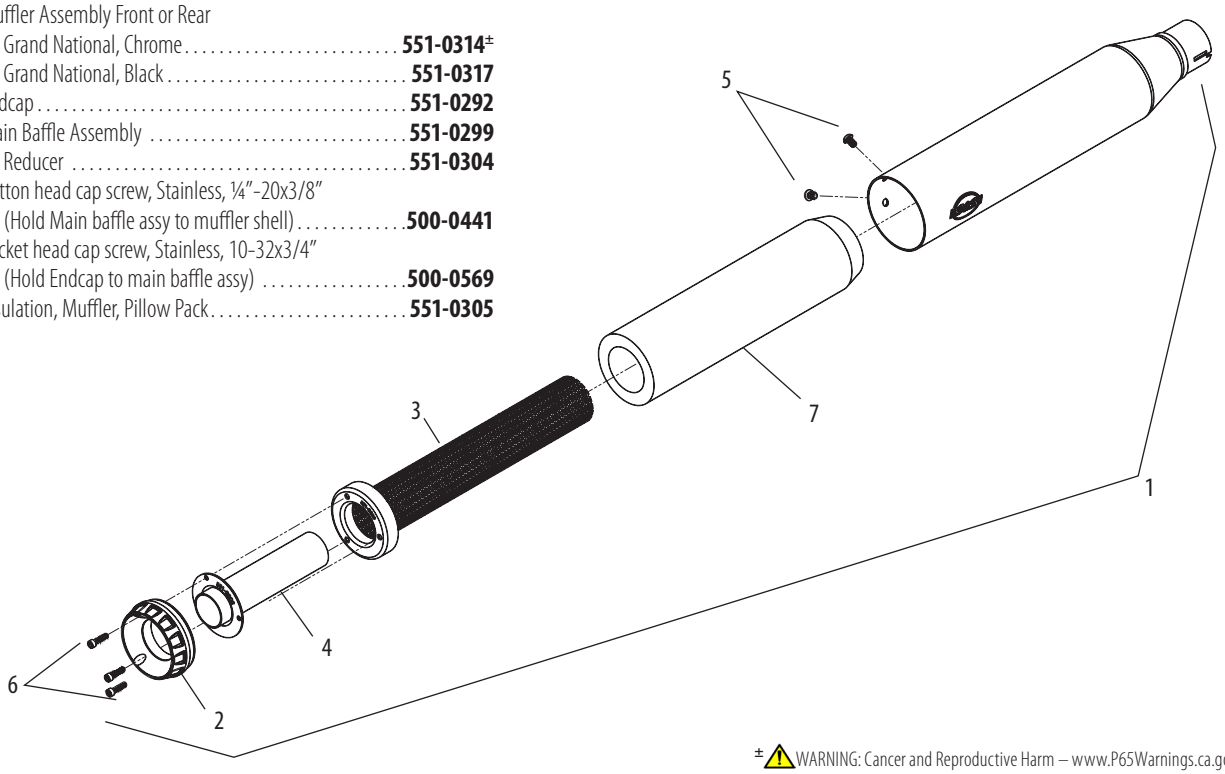

± ⚠ WARNING: Cancer and Reproductive Harm – www.P65Warnings.ca.gov

SIDEWINDER® 2:1 EXHAUST REPLACEMENT PARTS

1. Header,Assembly,2 into 1,Sidewinder¨,Weldment, 1995-'16 Touring Modelss **551-0705**
2. Muffler, Street Legal
   Chrome..... **551-0529A±**
   Black..... **551-0530A±**
3. Collector, heat shield,
   Chrome..... **551-0379±**
   Black..... **551-0381±**
4. Heat shield, front, 2:1, Sidewinder®, chrome, 1995-'16 touring models
   Chrome..... **551-0709±**
   Black..... **551-0715±**
5. Heat shield, rear, 2:1, Sidewinder®, chrome, 1995-2016 touring models
   Chrome..... **551-0712±**
   Black..... **551-0717±**
6. Clamp, header mount, 2:1, chrome plate, mild steel, 11 gauge, M8 2017 touring..... **551-0361**
7. Clamp, muffler, band style, 2.5" **551-0135**
8. Clamp, hose, worm drive, SAE #20 (qty. 3) **551-0527**
9. Clamp, hose, worm drive, SAE #40..... **551-0402**
10. Clamp, hose, worm drive, SAE #24 (qty. 3) **500-0791**
11. Adapter, oxygen sensor, 12mm to 18mm, stainless steel . **550-0375**
12. Gasket, exhaust, tapered, stainless steel, 1984-up bt, 1986-up xl *65324-83B, 65324-83A* **106-5029**
13. Bracket, header mount, 2:1, powdercoated, black, 2007-'16 touring models..... **551-0719**
14. Bracket, header mount, 2:1, powdercoated, black, 1995-'06 touring **551-0786**
15. Bolt, carriage, 5/16-18 x 3/4"..... **500-0555**
16. Nut, HSFH, 5/16-18 unc-2b x .283", Zinc, steel..... **50-5053-S**
17. Nut, HSFH, 5/16-24 unf-2b x .283", Zinc, steel *7593* **50-5025-S**
18. Washer, Spacer, Floor Board **551-0400**
19. Spacer, floor board, powdercoated, black **551-0399**
20. Screw, shc, 3/8-16 x 1-3/4", zinc, steel **500-0789**
21. Screw, shc, 3/8-16 x 2-3/4", zinc, steel **500-0790**
22. Screw, hh, flg, serrated, 5/16-18 x 1/2"..... **500-0744**
23. dB reducer **551-0026**

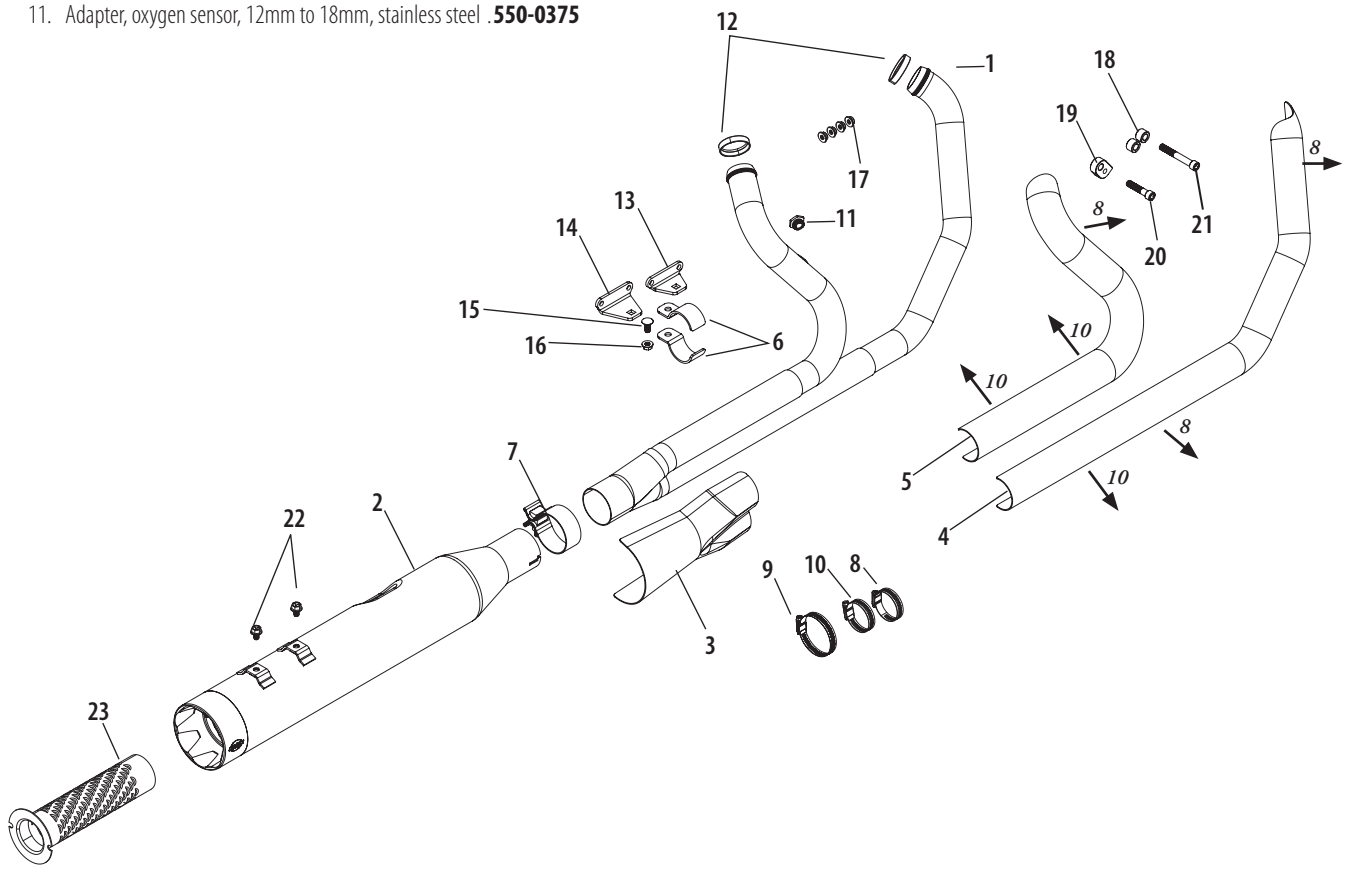

POWER TUNE® DUAL HEADER REPLACEMENTS

POWER TUNE® DUAL HEADERS

Fitment	Finish	Part #
1995–'08* big twins	Chrome	**550-0003A**
	Black	**550-0142A**



**Has 18mm sensor fittings in the stock locations for 2007-'08 bikes. If not equipped with oxygen sensors, the ports can be used for tuning. Plugs are included if ports are not used.*

DISCLAIMER: NOT LEGAL FOR SALE OR USE IN CALIFORNIA ON ANY POLLUTION CONTROLLED MOTOR VEHICLE. Not legal for sale or use on EPA pollution controlled vehicles originally equipped with catalyst.

*Qualified manufacturer declared emissions replacement part on FL touring models listed below.

California Models: FL Touring Fuel Injected MY 1995-2003, and 2007; CVO FL Touring MY 2000-2003

49 State Models: FL Touring Carbureted MY 1995-2005; FL Touring Fuel Injected MY 1995-2005 and 2007-2008; CVO FL Touring MY 2000-2005

⚠ WARNING: Cancer and Reproductive Harm – www.P65Warnings.ca.gov

POWER TUNE® DUAL HEADER REPLACEMENT PARTS

1. Pipe,Header,Power Tune Dual, Weldment,1999-2008 Touring *(1 Req)* **551-0083**
2. Tube,Crossover,Power Tune Dual,Weldment, 1995-2008 Touring *(1 Req)* **551-0077**
3. Shield,Front,Power Tune Dual,1995-2008 Touring *(1 Req)*
   - Chrome ..... **551-0091±**
   - Black **551-0092**
4. Shield,Rear,Power Tune Dual,1995-2016 Touring *(1 Req)*
   - Chrome ..... **551-0103±**
   - Black **551-0104**
5. Shield,Left,Power Tune Dual, 1995-2016 Touring *(1 Req)*
   - Chrome ..... **551-0115±**
   - Black **551-0116**
6. Gasket,Exhaust,Tapered,Stainless Steel, 1984-up bt, 1986-up xl *65324-83B, 65324-83A (2 Req)* **106-5029**
7. Plug,M18 x 1.5 Thread *(2 Req)* **551-0122**
8. Bolt,Carriage,⅜-16 x 1¼" *(1 Req)* **500-0553**
9. Bracket,Transmission,Side,Power Tune Duals, 1995-2008 Touring *(1 Req)* **551-0125**
10. Clamp,P-Style,Power Tune Dual,Side, 1995-2016 Touring *(1 Req)* **551-0119**
11. Nut,Flanged,Serrated,⅜-16 *(1 Req)* **500-0554**
12. Bracket,Assembly,Transmission,Pan, Power Tune Dual,1995-2008 Touring *(1 Req)* **551-0126**
13. Screw,SHC,¼-20 x 1⅞",Zinc Plated *(4 Req)* **500-0641**
14. Bolt,Carriage, ⅝-18 x ¾" *(2 Req)* **500-0555**
15. Clamp,P-Style,Crossover, Power Tune Dual Header,1995-2008 Touring *(1 Req)* **551-0120**
16. Nut, Flanged, Serrated, ⅝"-18 *(2 Req)* **50-5053-S**
17. Clamp,Muffler,Band Style *(1 Req)* **551-0569**
18. Clamp,Hose,Worm Drive,SAE #28 *(8 Req)* **551-0527**
19. Nut, HSFH,5/16-24 *7593* **50-5025-S**

± ⚠ WARNING: Cancer and Reproductive Harm – www.P65Warnings.ca.gov

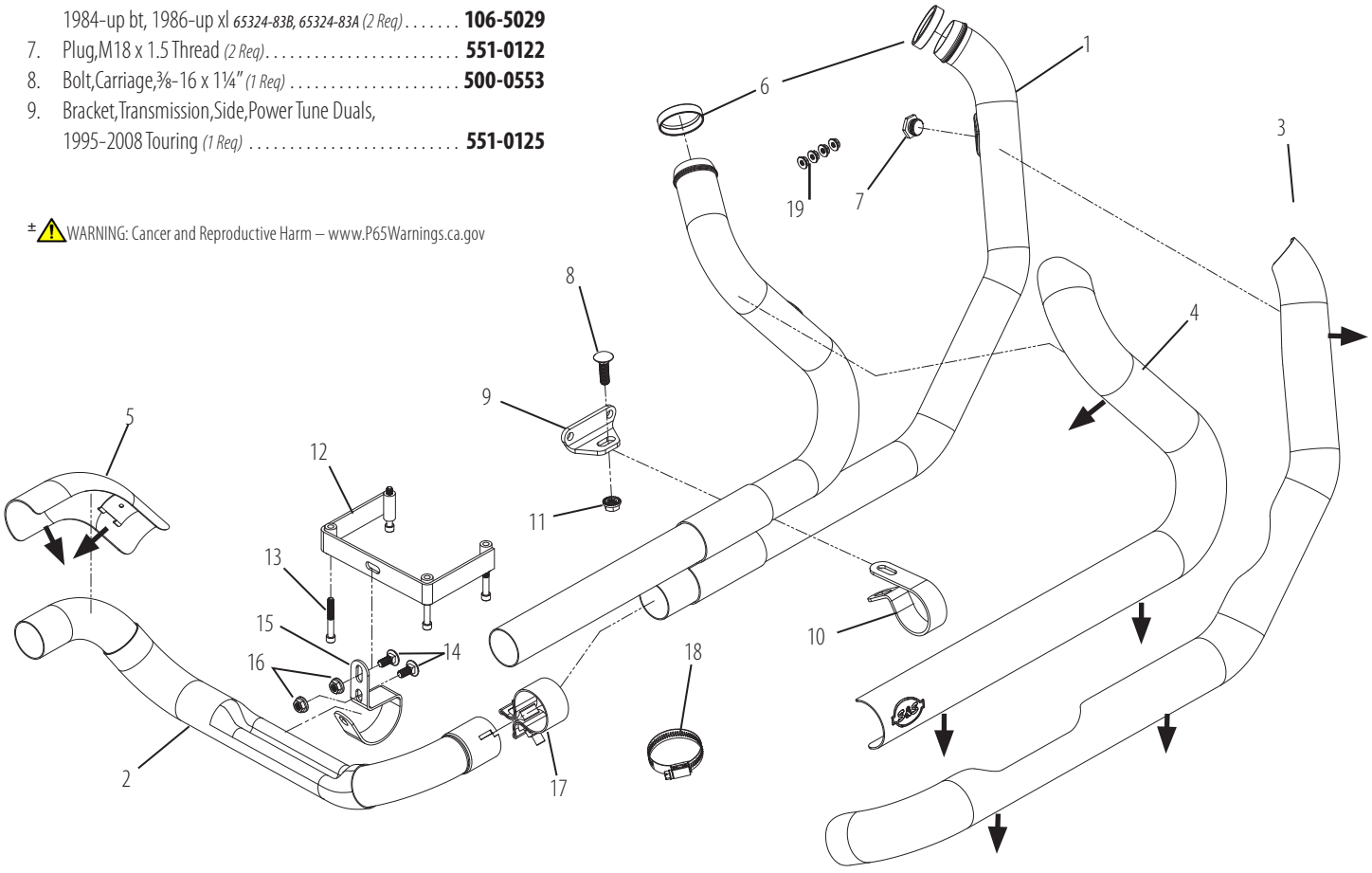

NOTE: Install #18 heat shield clamps with screw heads pointing in direction shown by arrows. ➔

SPORTSTER® & BUELL®



Performance Kits

883 to 1200cc Conversion Kit 254
1250cc Conversion Kit 253
Hooligan 252
Performance Kit Overview 251

Performance Parts

Air Cleaners 245
Camshafts 261
Carburetors 275
Crankcases 255
Cylinders & Pistons 258
Cylinder Heads 270
Electronics 281
Flywheels 256
Gaskets 282
Gearcover 257
Manifolds 280
Pushrods 265
Rocker Arms 269
Rocker Covers 274
Tappets 263
Valve Springs 268

Replacement Parts 284

NEW FOR 2020 FROM S&S CYCLE

SUPERSTREET 2:1 EXHAUST SYSTEM

CARB compliant
CARB EO K-010-12

FITMENT

- 2007–'13 Sportster® models with forward or mid controls *(does not fit XR models)*
- 2014–'20 Sportster models with forward or mid controls

FEATURES AND BENEFITS

- Classic 2:1 styling with world famous S&S performance!
- Fits forward and mid controls
- 50 State legal! CARB EO# K-010-12 for 2014–2020 Sportster models
- Durable high temperature black finish
- Full heat shields on both front and rear headers
- Stainless steel stepped header construction
- Multi-faceted endcap design
- Oxygen sensor ports allow use of wide band or stock O2 sensors
- SAE J2825 Sound Level Compliant
- Made in USA!

SUPERSTREET 2:1 EXHAUST SYSTEM

Year/Fitment	Part #
2014–'20 Sportster models with forward or mid controls	**550-0952A**
2007–'13 Sportster® models with forward or mid controls *(does not fit XR models)*	**550-0951††**

†Exempt from emissions tampering regulations under CARB EO# K-010-12 for all 2014-2020 Sportster Models
††*Qualified manufacturer declared U.S. 50-State legal emissions replacement part on all MY 2007-2013 Sportster models



REPLACEMENT PARTS: SEE PAGE 284

STEALTH AIR CLEANER KITS

CARB compliant EO #D-355-27

FITMENT

- 1991–2019 Harley-Davidson® Sportster® models

FEATURES AND BENEFITS

- Pre-filter available — See page 250
- Air directional stinger cone in the filter
- Use with any of several S&S designed covers
- High flow (1" taller) filter kit available — See page 250



STEALTH TEARDROP AIR CLEANER KIT

KIT INCLUDES STEALTH AIR CLEANER 170-0302D WHICH IS EXEMPT FROM EMISSIONS TAMPERING REGULATIONS UNDER CARB EO# D-355-27

Application	Fuel System	Finish	Part #
2007–'19 xl	Stock EFI	Chrome	**170-0526A**
		Gloss Black	**170-0527A**

±⚠WARNING: Cancer and Reproductive Harm – www.P65Warnings.ca.gov



MINI TEARDROP AIR CLEANER KIT

KIT INCLUDES STEALTH AIR CLEANER 170-0302D WHICH IS EXEMPT FROM EMISSIONS TAMPERING REGULATIONS UNDER CARB EO# D-355-27

Application	Fuel System	Finish	Part #
2007–'19 xl	Stock Bore Throttle Body	Chrome	**170-0439B±**
		Gloss Black	**170-0440B**

±⚠WARNING: Cancer and Reproductive Harm – www.P65Warnings.ca.gov



AIR 1 AIR CLEANER KIT

KIT INCLUDES STEALTH AIR CLEANER 170-0302D WHICH IS EXEMPT FROM EMISSIONS TAMPERING REGULATIONS UNDER CARB EO# D-355-27

Application	Fuel System	Part #
2007–'19 xl	Stock EFI	**170-0492B**



TRI-SPOKE AIR CLEANER KIT

KIT INCLUDES STEALTH AIR CLEANER 170-0302D WHICH IS EXEMPT FROM EMISSIONS TAMPERING REGULATIONS UNDER CARB EO# D-355-27

Application	Fuel System	Part #
2007–'19 xl	Stock EFI	**170-0490B**



TORKER AIR CLEANER KIT

KIT INCLUDES STEALTH AIR CLEANER 170-0302D WHICH IS EXEMPT FROM EMISSIONS TAMPERING REGULATIONS UNDER CARB EO# D-355-27

Application	Fuel System	Part #
2007–'19 xl	Stock EFI	**170-0491B**



AIRSTREAM AIR CLEANER KIT

KIT INCLUDES STEALTH AIR CLEANER 170-0302D WHICH IS EXEMPT FROM EMISSIONS TAMPERING REGULATIONS UNDER CARB EO# D-355-27

Application	Fuel System	Finish	Part #
2007–'19 xl	Stock EFI	Chrome	**170-0493B±**
		Gloss Black	**170-0494B**

±⚠WARNING: Cancer and Reproductive Harm – www.P65Warnings.ca.gov

CON'T
STEALTH AIR CLEANER KITS



MUSCLE AIR CLEANER KIT
KIT INCLUDES STEALTH AIR CLEANER 170-0302D WHICH IS EXEMPT FROM EMISSIONS TAMPERING REGULATIONS UNDER CARB EO# D-355-27

Application	Fuel System	Finish	Part #
2007–'19 xl	Stock EFI	Chrome	**170-0495B±**
		Gloss Black	**170-0496B**

± ⚠ WARNING: Cancer and Reproductive Harm – www.P65Warnings.ca.gov

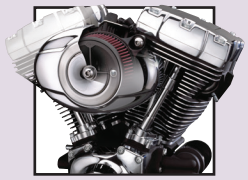

STEALTH AIR CLEANER KIT*
EXEMPT FROM EMISSIONS TAMPERING REGULATIONS UNDER CARB EO# D-355-27 FOR ALL FUEL INJECTED MODELS

Application	Fuel System	Part #
2007–'19 xl	Stock EFI	**170-0302D**

**These kits do not contain covers – Use an S&S cover, see page 247 .*

NOTES

Fuel injection tuning is not required with this product.

REPLACEMENT PARTS: SEE PAGE 291



MINI TEARDROP AIR CLEANER KIT

Fitment	Fuel System	Finish	Part #
1991–2003 xl	S&S Super E/G,	Chrome	**170-0447±**
		Gloss Black	**170-0448**
1991–2006 xl	Stock CV Carb	Chrome	**170-0449±**
		Gloss Black	**170-0450**

DISCLAIMER: NOT LEGAL FOR SALE OR USE IN CALIFORNIA ON ANY POLLUTION CONTROLLED MOTOR VEHICLE. NOT LEGAL FOR SALE OR USE NATIONWIDE ON ANY FEDERAL POLLUTION CONTROLLED MOTOR VEHICLE UNDER THE CLEAN AIR ACT ± ⚠ WARNING: Cancer and Reproductive Harm – www.P65Warnings.ca.gov



AIRSTREAM IN CHROME AIR CLEANER KIT±

Application	Fuel System	Part #
1991–'06 xl	Stock CV/EFI	**170-0053**
1991–'03 xl	S&S Super E & G Carbs	**170-0114**

DISCLAIMER: NOT LEGAL FOR SALE OR USE IN CALIFORNIA ON ANY POLLUTION CONTROLLED MOTOR VEHICLE. NOT LEGAL FOR SALE OR USE NATIONWIDE ON ANY FEDERAL POLLUTION CONTROLLED MOTOR VEHICLE UNDER THE CLEAN AIR ACT ± ⚠ WARNING: Cancer and Reproductive Harm – www.P65Warnings.ca.gov



MUSCLE IN CHROME AIR CLEANER KIT±

Application	Fuel System	Part #
1991–'06 xl	Stock CV/EFI	**170-0096**
1991–'03 xl	S&S Super E & G Carbs	**170-0117**

DISCLAIMER: NOT LEGAL FOR SALE OR USE IN CALIFORNIA ON ANY POLLUTION CONTROLLED MOTOR VEHICLE. NOT LEGAL FOR SALE OR USE NATIONWIDE ON ANY FEDERAL POLLUTION CONTROLLED MOTOR VEHICLE UNDER THE CLEAN AIR ACT ± ⚠ WARNING: Cancer and Reproductive Harm – www.P65Warnings.ca.gov

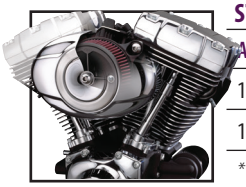

STEALTH AIR CLEANER KITS* — NO COVER

Application	Fuel System	Part #
1991–'06 xl	Stock CV	**170-0093**
1991–'03 xl	S&S Super E & G Carbs	**170-0113**

**These kits do not contain covers—Use an S&S cover, see page 247.*

DISCLAIMER: NOT LEGAL FOR SALE OR USE IN CALIFORNIA ON ANY POLLUTION CONTROLLED MOTOR VEHICLE. NOT LEGAL FOR SALE OR USE NATIONWIDE ON ANY FEDERAL POLLUTION CONTROLLED MOTOR VEHICLE UNDER THE CLEAN AIR ACT

EC STEALTH AIR CLEANER KITS

- 2007–2019 883 Harley-Davidson Sportster® Models with EFI *(e9 11003G)*
- 2007–2019 1200 Harley-Davidson Sportster Models with EFI *(e9 11002G))*



EC STEALTH AC KITS

Year/Fitment	Part #
2007–2019 / EFI xl 883	**170-0329**
2007–2019 / EFI xl 1200	**170-0330**

STEALTH AIR CLEANER KIT COVERS INCLUDING NEW STEALTH TRIBUTE



Stealth Tribute

NEW FOR 2020 FROM S&S CYCLE





Carbon Fiber



Mini in Gloss Black



Tri-Spoke



Torker



Air 1



Airstream in Chrome



Muscle in Gloss Black

STEALTH COVERS

NEW FOR 2020 Tribute		Teardrop		Teardrop—Slasher		Carbon Fiber	Mini	
Chrome	Gloss Black	Chrome	Gloss Black	Chrome	Gloss Black	Black	Chrome	Gloss Black
170-0592	**170-0593**	**170-0530**	**170-0531**	**170-0532**	**170-0533**	**170-0501**	**170-0367**	**170-0366**

Tri-Spoke	Torker	Air 1	Airstream		Muscle	
Gloss Black w/Highlights	Gloss Black w/Highlights	Gloss Black w/Highlights	Chrome	Gloss Black	Chrome	Gloss Black with Highlighted Logo
170-0210	**170-0206**	**170-0214**	**170-0118**	**170-0396**	**170-0121**	**170-0463**

Displacement		
111	124	143
170-0319	**170-0321**	**170-0323**

⚠WARNING: Cancer and Reproductive Harm – www.P65Warnings.ca.gov

SINGLE BORE TUNED INDUCTION SYSTEM

FITMENT

- 1991–’19 Harley-Davidson® Sportster® (with stock CV carb or EFI, or S&S carb)

FEATURES AND BENEFITS

- Bolt-on performance—over twice the filtering area over stock intake system
- Increases horsepower and torque across the rpm range using air column inertia and carefully timed gas dynamic pressure waves
- Smooth intake tract of carefully selected tuned lengths increases performance
- High flow washable and reusable cotton media provides performance, protection, and economy





Billet adaptor brackets make single bore tuned induction compatible with many engines and motorcycles.

CARB compliant
EO #D-355-27

SINGLE BORE TUNED INDUCTION SYSTEM KITS±

EXEMPT FROM EMISSIONS TAMPERING REGULATIONS UNDER CARB EO# D-355-27 FOR ALL FUEL INJECTED MODELS

Fitment	Fuel System	Finish	Part #
2007–’19 xl	Stock EFI	Chrome Runner and Red Filters	**170-0311D**

± ⚠ WARNING: Cancer and Reproductive Harm – www.P65Warnings.ca.gov

SINGLE BORE TUNED INDUCTION SYSTEM KITS

Fitment	Fuel Delivery	Finish	Part #
1991–’06 xl	Stock CV	Chrome Runner and Red Filters	**170-0089±**
CTO	Specify	Specify	**106-5337***

**Use the Configure to Order (CTO) part number to order different finish and filter color.*

DISCLAIMER: NOT LEGAL FOR SALE OR USE IN CALIFORNIA ON ANY POLLUTION CONTROLLED MOTOR VEHICLE. NOT LEGAL FOR SALE OR USE NATIONWIDE ON ANY FEDERAL POLLUTION CONTROLLED MOTOR VEHICLE UNDER THE CLEAN AIR ACT

± ⚠ WARNING: Cancer and Reproductive Harm – www.P65Warnings.ca.gov

REPLACEMENT PARTS: SEE PAGE 294

CLASSIC TEARDROP AIR CLEANER KIT

FITMENT
- 1986–'17 Harley-Davidson® Sportster®
- 1994–'02 Buell®

FEATURES AND BENEFITS
- Uniquely designed back plate has air horn style radiused entryway to reduce turbulence
- Dimpled cover with directional air cone on inside creates smooth path for air
- Great addition to performance exhaust or cams

KIT CONTENTS
- Teardrop Air Cleaner Cover in Chrome or Gloss Black
- Filter
- Backing plate
- All mounting hardware



17-0404±

REPLACEMENT PARTS STARTING ON PAGE 292

CARB compliant EO #D-355-27

CLASSIC TEARDROP AIR CLEANER KITS FOR SPORTSTER® MODELS
EXEMPT FROM EMISSIONS TAMPERING REGULATIONS UNDER CARB EO# D-355-27 FOR ALL FUEL INJECTED MODELS

Model	Finish	FUEL SYSTEM
		Stock EFI
2007–'19 xl	Chrome	170-0306D±
	Gloss Black	170-0307D

±⚠WARNING: Cancer and Reproductive Harm – www.P65Warnings.ca.gov

CLASSIC TEARDROP AIR CLEANER KITS FOR SPORTSTER® AND BUELL® MODELS

Model	Finish	FUEL DELIVERY TYPE	
		Stock CV	Super E & G
2004–2017 xl	Chrome	17-0448±	17-0428±
	Gloss Black	170-0182A	–
1991–'06 HD® Carbureted xl	Chrome	17-0448±	17-0404±
	Gloss Black	170-0182A	–
1988–'90 xl	Chrome	–	17-0399±
1986–'87 xl	Chrome	–	17-0399±

DISCLAIMER: NOT LEGAL FOR SALE OR USE IN CALIFORNIA ON ANY POLLUTION CONTROLLED MOTOR VEHICLE. NOT LEGAL FOR SALE OR USE NATIONWIDE ON ANY FEDERAL POLLUTION CONTROLLED MOTOR VEHICLE UNDER THE CLEAN AIR ACT

±⚠WARNING: Cancer and Reproductive Harm – www.P65Warnings.ca.gov

NOTE Fuel delivery (carbureted or EFI) may need to be modified to maintain the correct air and fuel mixture



17-0004±

170-0384A





17-0071



17-0378±

CLASSIC TEARDROP AIR CLEANER COVERS

Style	Finish	Part #
Classic Teardrop	Chrome	17-0378±
	Gloss Black	170-0384A
Slasher Teardrop	Chrome	17-0004±
	Gloss Black	170-0419
Nostalgic Teardrop	Polished	17-0071

±⚠WARNING: Cancer and Reproductive Harm – www.P65Warnings.ca.gov

PRE-FILTERS

FITMENT
- S&S® Stealth Air Filters

FEATURES AND BENEFITS
- Water resistant
- Prevents large debris from prematurely clogging filter
- Washable Nylon
- Promotes longer filter life
- Reduces the risk of water entering air intake system



170-0197

PRE-FILTERS

Application	Part #
Standard Stealth Air Filter	**170-0193**
1" Tall Stealth Air Filter	**170-0197**

HIGH FLOW AIR FILTER KITS

FITMENT
- S&S Classic Teardrop air cleaners for Super E & G carbs and S&S EFI throttle bodies

FEATURES AND BENEFITS
- Low restriction filter element comes pre-oiled for true plug and play installation
- 1" wider filtration area provides up to 37% more airflow over standard S&S filters
- Resulting band of exposed filter material imparts a high performance look

KIT CONTENTS
- Wide filter
- Filter spacers



170-0127



17-0045

HIGH FLOW AIR FILTERS

Description	Fitment	Part #
High Flow Air Filter Kit *(includes spacers)*	Classic Teardrop	**17-0045**
	Stealth, 1" Taller	**170-0127***
1" Taller Filter Only	Classic Teardrop	**106-4724**
	Stealth	**170-0154**
Spacer	Classic Teardrop & Stealth, 1" Taller	**50-5009-S**

*DISCLAIMER: NOT LEGAL FOR SALE OR USE IN CALIFORNIA ON ANY POLLUTION CONTROLLED MOTOR VEHICLE. NOT LEGAL FOR SALE OR USE NATIONWIDE ON ANY FEDERAL POLLUTION CONTROLLED MOTOR VEHICLE UNDER THE CLEAN AIR ACT

STANDARD REPLACEMENT FILTERS

STANDARD REPLACEMENT AIR FILTERS

Description	Fitment	Part #
Standard Filter Only	Classic Teardrop	**106-4722**
	Stealth	**170-0126**

All reference to HD® part numbers is for identification purposes only. We in no way are implying that any of S&S® Cycle's products are original equipment parts or that they are equivalent to the corresponding H-D part number shown.

PERFORMANCE KIT OVERVIEW
FOR HARLEY-DAVIDSON® SPORTSTER® & BUELL® MODELS



1250CC CONVERSION KIT
This is the largest big bore kit S&S offers for Harley-Davidson® Sportster® models, that can be bolted directly to stock crankcases. Quick and easy to install. Fast on the strip. Over 90 hp typical with S&S exhaust, cams, and CNC ported heads – Using the stock fuel system! (See page 253)



883 TO 1200CC CONVERSION KIT
Boost any 883cc Harley-Davidson® Sportster® to 1200cc. No machine shop? No problem, no machining is needed. Don't want to rebalance your stock 883cc flywheels? You don't need to since these pistons weigh the same as stock 883 pistons. Cylinder head modification is also not needed. The dished piston dome keeps compression down to a streetable 9.4:1 with stock 883cc heads. Installing this kit takes the same time as replacing a stock top end. It's just more fun when you're done. (See page 254)



HOOLIGAN KIT
Whether you're racing Hooligan flat-track or just want more power, the S&S Hooligan kits for 2000-'20 Harley-Davidson® Sportster® models will give you an edge on the competition. Boost that 883 to 1200cc. Already running a 1200? Bring it up to 1250cc. Bolt on big bore kits mean easy installation with no machining and no rebalancing. S&S bolt-in cams and premium tappets make the most of the added displacement. (See page 252)

HOOLIGAN KITS
FOR 2000–2020 HARLEY-DAVIDSON® SPORTSTER® MODELS

FITMENT
- 2000–'20 Harley-Davidson® Sportster® models

FEATURES & BENEFITS
- Easy installation—Bolt-on parts—no machining, no rebalancing
- S&S 482 Cams
- Increase 883cc engines to 1200cc
- Increase 1200cc engines to 1250cc
- Use stock heads, pushrods, and fuel system*
- Available in wrinkle black or silver powder coat that matches stock finish

**For maximum performance gains use with S&S Stealth air cleaner and S&S Slip-on mufflers.*

HOOLIGAN KITS

Kit	Finish	Part #
883cc to 1200cc	Wrinkle Black	**910-0699**
883cc to 1200cc	Silver	**910-0700**
1200cc to 1250cc	Wrinkle Black	**910-0701**
1200cc to 1250cc	Silver	**910-0702**

DISCLAIMER: FOR CLOSED COURSE COMPETITION USE ONLY. NOT INTENDED FOR STREET USE. LEGAL IN CALIFORNIA ONLY FOR RACING VEHICLES WHICH MAY NEVER BE USED, OR REGISTERED OR LICENSED FOR USE, UPON A HIGHWAY.

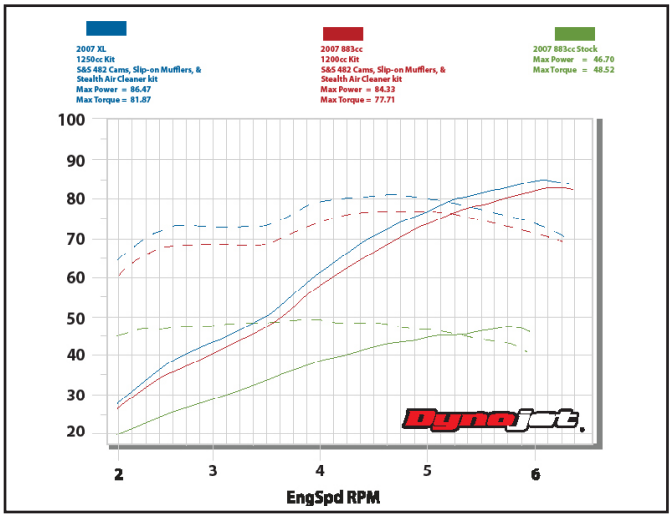

This dyno chart from our DynoJet® 250i chassis dyno, makes is easy to see why S&S Hooligan kits raise the fun factor and give you a competitive edge. The S&S 1200cc kit with stock 883 heads increases horsepower by 80% over the original stock 883cc engine. The 1250cc kit shown here had 1200 heads. Stock 883 heads cannot be used on the 1250cc kit. Even more power is available with the S&S CNC cylinder head porting service. Do you want to win, or are you just along for the ride?

NOTES
This kit is not compatible with the stock ignition.



1250cc CONVERSION KIT
FOR 1986–2020 1200cc HARLEY-DAVIDSON® SPORTSTER® MODELS

FITMENT
- 1986–2020 1200cc Harley-Davidson® Sportster® models
- 1986–2020 883cc Harley-Davidson Sportster models

FEATURES & BENEFITS
- Forged pistons — coated piston skirts with measurement window
- Stock 1986–2020 1200cc cylinders can be bored over to accept these pistons
- Pistons have larger than stock valve pockets — accepts up to 2.00" valves

OPTIONS
- Silver powder coat finish
- Wrinkle black powder coat finish

KIT CONTENTS
- S&S 1250cc pistons w/rings and wristpins
- S&S 3⅜" bore cylinders
- MLS head, base, and exhaust gaskets
- Assembly lube
- Instructions



910-0692

1250cc CYLINDER AND PISTON CONVERSION KITS

Fitment	Piston Type	Compression Ratio	Finish	Part #
1986–2020 Sportster®	S&S Forged Flat top	10.3:1	Silver	**910-0689**
			Wrinkle Black	**910-0691**
	S&S Forged 5.5cc dome	11.2:1	Silver	**910-0690**
			Wrinkle Black	**910-0692**

**The cylinder fin profile does not perfectly match the fins on 2004 and later stock heads, but the difference is not considered to be objectionable. See Photos.*

Compression ratios given are with 60cc combustion chambers.

DISCLAIMER: NOT LEGAL FOR SALE OR USE IN CALIFORNIA ON ANY POLLUTION CONTROLLED MOTOR VEHICLE. NOT LEGAL FOR SALE OR USE NATIONWIDE ON ANY FEDERAL POLLUTION CONTROLLED MOTOR VEHICLE UNDER THE CLEAN AIR ACT

NOTES

Can not run stock 883 cylinder heads with this kit. 883 heads may be used if S&S CNC porting is performed. PN 909-0011

The cylinder fin profile does not perfectly match the fins on 2004 and later stock heads, but the difference is not considered to be objectionable. See photo.

S&S does not recommend boring 2004 and later 883cc cylinders from 3" to 3½" bore to increase engine displacement to 1200cc due to changes in factory cylinder and liner. A smaller O.D. liner and large chamfer on the bottom of the spigot make boring the 883 cylinder not possible. New cylinders are recommended.

This kit is not compatible with the stock ignition.



S&S cylinders match the fin profile on 1986–'03 cylinder heads. Although there is a slight difference in the fin profiles of S&S cylinders and stock 2004 –'20 cylinder heads (shown above), the look is generally not considered to be objectionable. You decide!

883 TO 1200cc CONVERSION KIT
FOR 1986–2020 883CC HARLEY-DAVIDSON® SPORTSTER® MODELS

FITMENT
- 1986–2020* 883cc Harley-Davidson® Sportster® models *(*See photos)*

FEATURES & BENEFITS
- Increase displacement from 883cc to 1200cc
- Save time because pistons are already fit to the cylinders—Ready to assemble out of the box!
- No machining
- No rebalancing of 883cc flywheels
- No cylinder head modifications
- Durable powder coat finish
- 9.6:1 Compression ratio
- Must be used with 883 heads

OPTIONS
- Silver powder coat finish
- Wrinkle black powder coat finish

KIT CONTENTS
- S&S 883–1200cc conversion pistons w/rings and wristpins
- S&S 106-5548 piston kit—11.2cc dish volume
- S&S 3½" Bore Cylinders
- Cylinder head, base, and exhaust gaskets
- Assembly lube
- Instructions



910-0687

883cc TO 1200cc CYLINDER AND PISTON CONVERSION KITS

Fitment	Finish	Part #
1986–2020 883cc Sportster®	Silver Powder Coat	**910-0688**
	Wrinkle Black Powder Coat	**910-0687**

DISCLAIMER: NOT LEGAL FOR SALE OR USE IN CALIFORNIA ON ANY POLLUTION CONTROLLED MOTOR VEHICLE. NOT LEGAL FOR SALE OR USE NATIONWIDE ON ANY FEDERAL POLLUTION CONTROLLED MOTOR VEHICLE UNDER THE CLEAN AIR ACT



S&S cylinders match the fin profile on 1986–'03 cylinder heads. Although there is a slight difference in the fin profiles of S&S cylinders and stock 2004 –'20 cylinder heads (shown above), the look is generally not considered to be objectionable. You decide!

CRANKCASES
FOR 1986–'03 SPORTSTER® AND BUELL® MODELS

FITMENT
- 1986–'03 Harley-Davidson® Sportster® and Buell®
- S&S SB-Series engines

FEATURES AND BENEFITS
- Super strong for high performance engines
- Crankcases come complete with all required bearings and hardware
- Replaceable tappet guides for all year groups

OPTIONS
- Special Application (SA) Cases
  - Choice of cam geometry—1986–'90 (4-speed) or 1991–'99 (5-speed)
  - 3⅝" bore to 4½" bore
  - Up to 1" taller cylinder deck height
  - Machined for stock, big twin, or S&S 1.500" diameter sprocket shafts

KIT CONTENTS
- Crankcase assembly
- Billet tappet guides
- Bearings and hardware
- Transmission trapdoor
- Oil filter mounting bracket

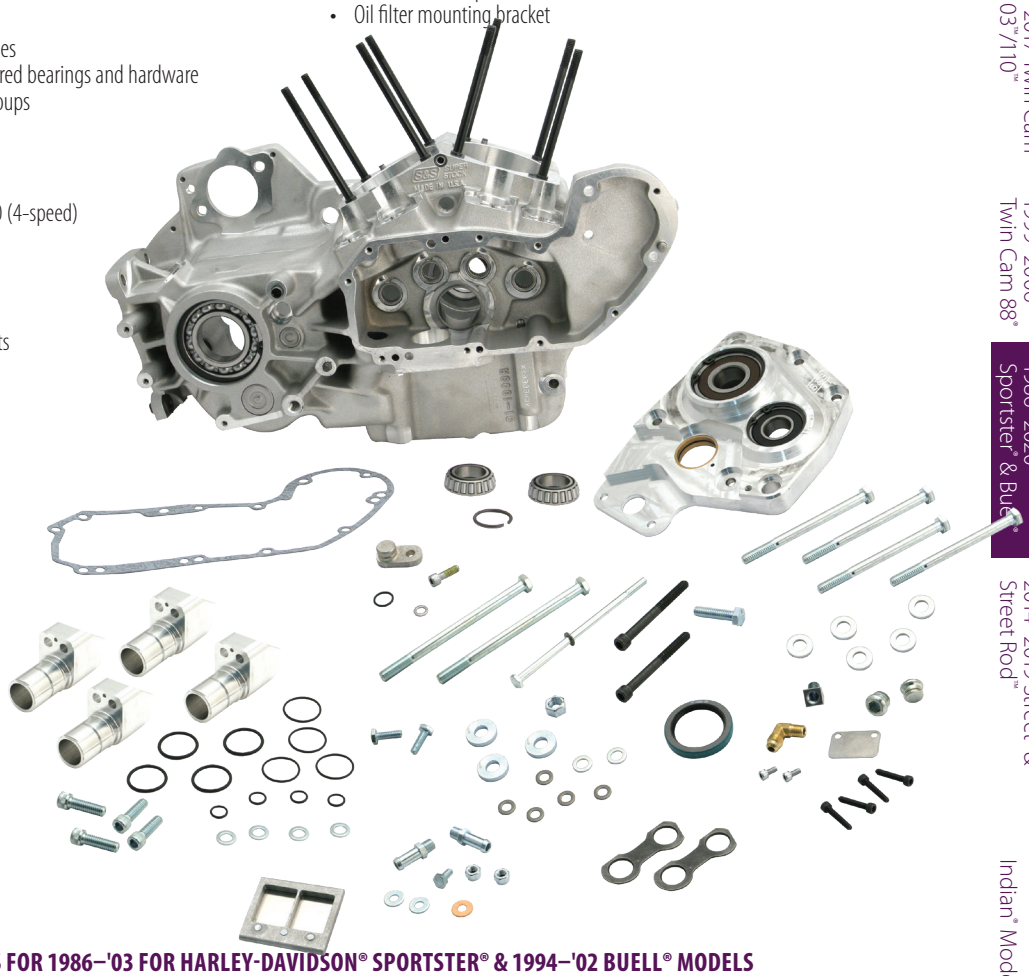

SPECIAL APPLICATION CRANKCASES FOR 1986–'03 FOR HARLEY-DAVIDSON® SPORTSTER® & 1994–'02 BUELL® MODELS

Engine	Cam Geometry	4" Bore
Sportster/Buell	1986–'90	**31-1012** *31-1012NS*

• All S&S crankcases use 5-speed transmission and primary components.
• These cases will not accept 4-speed transmission.
• Not compatible with stock flywheel assemblies.
•Since S&S Special Application crankcases are .500" wider than stock, they require part #33-2329 +.500" pinion shaft and S&S Special Application tappet guides.
• Requires use of S&S cam cover gasket. (Part #31-2099).
• 1991–'03 cases require 1991–'96 gearcovers.

NOTES

If transmission and primary do not share the same lubricant, it is vital to ensure that both the primary and the transmission are filled with the correct lubricants.

DISCLAIMER: NOT LEGAL FOR SALE OR USE IN CALIFORNIA ON ANY POLLUTION CONTROLLED MOTOR VEHICLE. NOT LEGAL FOR SALE OR USE NATIONWIDE ON ANY FEDERAL POLLUTION CONTROLLED MOTOR VEHICLE UNDER THE CLEAN AIR ACT

ANY JOB IS EASY WITH THE RIGHT TOOLS
S&S DEGREE WHEEL, SEE PAGE 327

REPLACEMENT PARTS: SEE PAGE 286

FLYWHEELS
FOR 1986–'99 HARLEY-DAVIDSON® SPORTSTER® AND 1994–'97 BUELL® MODELS

FITMENT
- 1986–'99 Harley-Davidson® Sportster®
- 1994–'97 Buell®
- S&S SB-Series engines

FEATURES AND BENEFITS
- CNC machined from heat-treated, closed die, steel forging
- Stronger than cast iron or late style steel flywheels
- 5-piece design—easily rebuilt with standard flywheel fixtures and tools
- Unassembled balanced flywheels are balanced by the static method

FLYWHEEL ASSEMBLIES FOR 1994–'97 BUELL® MODELS
S&S flywheels for two-cylinder 1994–'97 Buell models. Although similar to flywheels for Sportster® models, these flywheels are knife edged and lightened. This design offers these advantages:
- Knife edging is a proven design used in race motors to make the flywheels "shed" oil more quickly to reduce drag at high rpm.
- Knife edging and lightening increases effective crankcase volume and reduces the flywheel assembly weight by 2–4 lbs. Increased crankcase volume results in better oil control, effectively reducing friction and heat, as well as helping to control oil carry over. Reduced weight results in faster revving and higher top rpm capability.
- All S&S flywheels for Sportster and Buell models feature removable mainshafts for easy rebuilding. In addition, the S&S pinion shaft is the 1986–'87 splined design, which is much stronger than the stock pinion shaft, allowing the use of higher lift cams and stronger valve springs.

OPTIONS
- Stock replacement or stroker flywheels for high performance upgrade
- Available in a wide variety of styles and strokes
- Available balanced or unbalanced
- Available assembled or unassembled by special order

KIT CONTENTS
- Flywheels
- Pinion shaft and sprocket shaft
- Optional connecting rods



TRYING TO IDENTIFY AN S&S® FLYWHEEL? SEE FLYWHEEL I.D. CHART IN THE APPENDIX: PAGE 342

REPLACEMENT PARTS: SEE PAGE 285

NOTES

Lightened flywheels are not recommended for Sportster models with solid mounted engines due to increased vibration and loss of low rpm torque.

S&S pinion shafts for 1986–'03 Sportster® models are the splined 1986–'87 style.

Pinion and oil pump drive gears in 1988–'03 models must be replaced with early style gears. See page 262

Complete S&S Flywheel assemblies will fit up to 1999 model year engines. However, the flywheels are compatible with stock crankpins up to 1999 only.

Stock stroke flywheels are balanced to stock weight pistons

These flywheels will not fit 1998–up Buell® models.

REPLACEMENT FLYWHEEL ASSEMBLIES FOR HARLEY-DAVIDSON® SPORTSTER® MODELS

Year Group	Displacement	Stroke	Flywheel Diameter	Part #
1986–'90	1200cc (Stock)	3 13/16" (Stock)	7 7/8" (Stock)	**320-0052** USA
	S&S 89" SW Kit	4 5/16"	7 7/8" (Stock)	**32-3061**
1991–'99	1200cc (Stock)	3 13/16" (Stock)	7 7/8" (Stock)	**320-0053** USA
	S&S 89" SW Kit	4 5/16"	7 7/8" (Stock)	**32-3062**
Special Order*	Specify	Specify	Specify	**32-3014***

**Special Order Notes: Download the Special Order Form at sscycle.com/soforms*

Application	Stroke	Flywheel Diameter	Part #
Special Order For Buell*	Specify	Specify	**32-3014***

**Special Order: Download the Special Order Form at sscycle.com/soforms*

BILLET GEARCOVERS
FOR SPORTSTER® AND BUELL® MODELS

BILLET GEARCOVER KITS — STANDARD±

Bushing Style	Part #
1986–'90 style bushing	**31-0303**

±⚠WARNING: Cancer and Reproductive Harm – www.P65Warnings.ca.gov

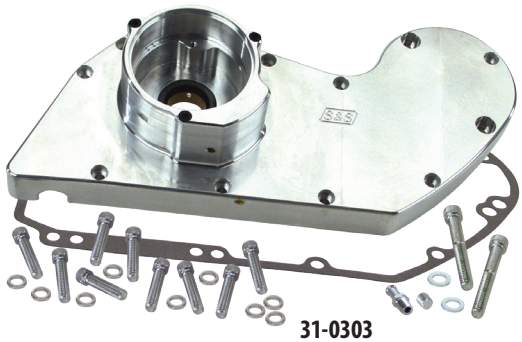

31-0303

REPLACEMENT GASKETS

Product	Part #
Gearcover Gasket	**31-2052**
Cam Seal *11124*	**31-4051**

All reference to HD® part numbers is for identification purposes only. We in no way are implying that any of S&S Cycle's products are original equipment parts or that they are equivalent to the corresponding HD® part number shown.

BILLET FILTER MOUNT

FITMENT
- 1986–'87 Harley-Davidson® Sportster® models
- S&S SB-Series engines
- S&S crankcases for Sportster and Buell® models

FEATURES AND BENEFITS
- Accepts stock oil pressure sending switch
- Machined for easy routing of an oil cooler
- Seals off cam chest, providing a convenient place to spin on an oil filter

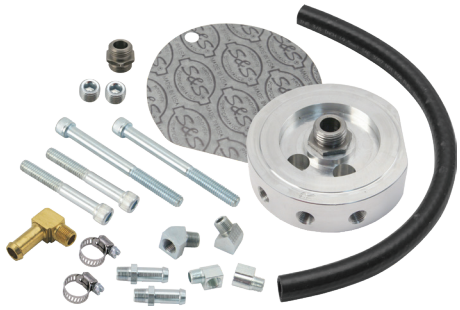

BILLET FILTER MOUNT±

Fitment	Part #
1986–'87 Harley-Davidson® Sportster® S&S SB-Series engines S&S crankcases for Sportster and Buell®	**106-3134**

±⚠WARNING: Cancer and Reproductive Harm – www.P65Warnings.ca.gov

CYLINDERS WITH PISTONS KIT

- Cylinders with piston kits include fitted pistons and cylinders, head gaskets, base gaskets, and exhaust gaskets
- Cylinder kits with pistons are honed to fit the pistons included



91-3208

S&S® 3⅝" BORE CYLINDERS WITH PISTONS KIT SPECIFICATION CHART					
Displacement	Stroke	Cylinder Length	Piston Deck Height	COMPRESSION RATIO	
				S&S Super Stock® Heads - Low/Intermediate/High	Stock Heads
1458cc (89")	4⅜"	5.087"	1.200"	9.5/10.3/12.4	*
1688cc (103")	5"	5.750"		10.9:1/11.8:1/14.2:1	*
*Compression ratio will be determined by the combustion chamber modifications					

3⅜" BORE CYLINDERS WITH PISTONS FOR 89" KIT

Displacement	CYLINDERS W/PISTONS (SET)	
	Low Compression (92-1080 series pistons)	Intermediate Compression (92-1120 series pistons)
	Natural	Natural
1458cc (89")	**91-3207**	**91-3208**



910-0689

S&S® 3 13/16" BORE CYLINDERS WITH PISTONS KIT SPECIFICATION CHART					
Displacement	Stroke	Cylinder Length	Dome Volume	Piston Deck Height	Compression Ratio S&S Heads
1250cc	3 13/16"	4.650"	Flat Top	1.208"	10.3:1
			5.5cc		11.2:1

3 13/16" BORE CYLINDERS WITH PISTONS FOR 1250CC KIT

Displacement	Piston Type	Silver	Wrinkle Black
1250cc	S&S Forged Flat Top	**910-0689**	**910-0691**
	S&S Forged 5.5cc Domed	**910-0690**	**910-0692**

DISCLAIMER: NOT LEGAL FOR SALE OR USE IN CALIFORNIA ON ANY POLLUTION CONTROLLED MOTOR VEHICLE. NOT LEGAL FOR SALE OR USE NATIONWIDE ON ANY FEDERAL POLLUTION CONTROLLED MOTOR VEHICLE UNDER THE CLEAN AIR ACT



910-0688

S&S® 3½" BORE CYLINDERS WITH PISTONS KIT SPECIFICATION CHART					
Displacement	Stroke	Cylinder Length	Piston Deck Height	COMPRESSION RATIO	
				S&S Heads	Stock Heads
1200cc	3 13/16"	4.650"	1.208"	10.5:1	9.6:1

3½" BORE CYLINDERS WITH PISTONS FOR 1200CC & 883CC KITS

Displacement	Silver	Wrinkle Black
1200cc, 1986-2003 Sportster®, 1994-'02 Buell® Models with S&S® Heads	**910-0694**	**910-0696**
883cc (conversion to 1200cc), 1986-2020*Sportster® models	**910-0688**	**910-0687**

**The cylinder fin profile does not perfectly match the fins on 2004 and later stock heads, but the difference is not considered to be objectionable. See Photos on page 254*

DISCLAIMER: NOT LEGAL FOR SALE OR USE IN CALIFORNIA ON ANY POLLUTION CONTROLLED MOTOR VEHICLE. NOT LEGAL FOR SALE OR USE NATIONWIDE ON ANY FEDERAL POLLUTION CONTROLLED MOTOR VEHICLE UNDER THE CLEAN AIR ACT

ALL OTHER SPECIFICATIONS AND FINISHES ARE AVAILABLE THROUGH SPECIAL ORDER **91-3604***

**Special Order: Download the Special Order Form at sscycle.com/soforms*

NOTE

Stock crankcases must be machined to accommodate the larger spigot diameter.

Combustion chamber modifications must be made to stock cylinder heads to reduce compression.

CYLINDERS

- Cylinder sets without pistons are bored slightly under normal size and are not honed.
- Include dowel pins



3⁹⁄₁₆" BORE CYLINDERS

Displacement		Silver	Wrinkle Black
1200cc	Set	**910-0693**	**910-0697**

DISCLAIMER: NOT LEGAL FOR SALE OR USE IN CALIFORNIA ON ANY POLLUTION CONTROLLED MOTOR VEHICLE. NOT LEGAL FOR SALE OR USE NATIONWIDE ON ANY FEDERAL POLLUTION CONTROLLED MOTOR VEHICLE UNDER THE CLEAN AIR ACT

3½" BORE CYLINDERS

Displacement		Silver	Wrinkle Black
1200cc	Set	**910-0698**	**910-0695**

ALL OTHER SPECIFICATIONS AND FINISHES ARE AVAILABLE THROUGH SPECIAL ORDER 91-3604*
**Special Order: Download the Special Order Form at sscycle.com/soforms*

NOTES

Stock crankcases must be machined to accommodate the larger spigot diameter.

Combustion chamber modifications must be made to stock cylinder heads to reduce compression.

PISTON KITS

- Piston kits include set of pistons, rings, wristpins, and clips



4" BORE FORGED PISTON KITS

Displacement	Deck Height	Stroke	Standard	+.010"	+.020"
100"	1.200"	4"	**92-1420**	**92-1421**	**92-1422**

Recommended piston fitment: Close: .0020"-.0025" Loose: .0032"-.0045"

3⅝" BORE FORGED PISTON KITS FOR STOCK HEADS

Displacement	Deck Height	Stroke	Standard	+.010"	+.030"
1458cc (89")	1.200"	4⁵⁄₁₆"	**92-1940**	**92-1941**	**92-1943**
1688cc (103")	1.200"	5"			

Recommended piston fitment: Close: 0.0015"-0.0020" Loose: 0.0030"-0.0040"

3⅝" SUPER STOCK® FORGED LOW COMPRESSION PISTON KITS

Displacement	Deck Height	Stroke	+.010"
1458cc (89")	1.200"	4⁵⁄₁₆"	**92-1081**
1688cc (103")	1.200"	5"	

PISTON KITS con't

3⁹⁄₁₆" BORE FORGED PISTON KITS

Displacement	Dome Volume	Deck Height	Stroke	Standard
1250cc	Flat Top	1.207"	3¹³⁄₁₆"	**920-0070**
	5.5cc	1.207"	3¹³⁄₁₆"	**920-0071**

DISCLAIMER: FOR CLOSED COURSE COMPETITION USE ONLY. NOT INTENDED FOR STREET USE.
LEGAL IN CALIFORNIA ONLY FOR RACING VEHICLES WHICH MAY NEVER BE USED, OR REGISTERED OR LICENSED FOR USE, UPON A HIGHWAY.

3½" BORE FORGED PISTON KITS

Cylinder Heads	Deck Height	Stroke	Standard	+.010"	+.020"
S&S® Super Stock®	1.1875"	3¹³⁄₁₆"	**92-2016**	**92-2017**	**92-2018**
Stock 883cc	1.207"		**106-5548**	**106-5549**	**106-5550**

Recommended piston fitment: Close: 0.0025"-0.003" Loose: 0.0030"-0.0040"

REPLACEMENT PARTS FOR PISTONS

PISTON RINGS, CHROMOLY FACED

Bore	4"	3⅝"	3 ⁹⁄₁₆"	3½"	
				S&S® Heads	Stock 883cc Heads
Deck Height	1.200	1.200	-	1.1875"	1.207"
Standard	**94-1300X** USA₂	**94-1210X** USA₁	**940-0042***	**94-2216X** *21921-83*	**94-2206X** *22334-78A, 22334-78B, 21920-83*
+.005"	–	–	–	**94-22165X** *21921-83*	–
+.010"	**94-1301X** USA₂	**94-1211X** USA₁	–	**94-2217X**	**94-2207X** *22334-78A, 22334-78B, 21920-83*
+.020"	**94-1302X** USA₂	**94-1212X** USA₁	–	**94-2218X**	**94-2208X** *22336-78B, 21923-83*
+.030"	–	**94-1213X**	–	**94-2219X**	**94-2209X** *22336-78B, 21923-83*
+.040"	–	**94-1214X**	–	–	–
+.060"	–	**94-1216X**	–	–	–

**Clips and pins not available.*

WRISTPINS

Bore	Description	Part #
4"	Wristpin .792" x 2.825"	**94-9256** USA₁,₂
3⅝"		
3½"		

KEEPERS

Bore	Description		Part #
4"	Keeper *22589-83A*	*each*	**94-9254-S**
3⅝"		*2 pack*	**94-9254-2**
3½"		*4 pack*	**94-9254**

All reference to HD® part numbers is for identification purposes only. We in no way are implying that any of S&S Cycle's products are original equipment parts or that they are equivalent to the corresponding HD® part number shown.

CAMSHAFTS

FITMENT

- 1986–'20 Harley-Davidson® Sportster® models
- 1994–'02 Buell® models

APPLICATIONS

S&S 482: Bolt-in cam for 2004–'19 models only. Recommended for S&S 883 to 1250 conversion kits. Best performance gains 3500-6500 rpm. Compatible with stock valve springs and stock non-adjustable pushrods.

S&S 500: Bolt-in cams that provide excellent torque with stock or ported heads. Recommended for modified engines up to 89" displacement and 9.0:1 to 10.5:1 compression ratio. Will work in 89" to 100" engines with less than 9.0:1 compression. Normal clearancing checks recommended. 2000-6000 rpm. Works with stock valve springs and stock non-adjustable pushrods.

S&S 555: Recommended for 89"-100" engines with 9.5:1 to 11.5:1 compression ratio. Provides best performance from 3500-6500 rpm using ported stock heads or S&S heads. Requires adjustable pushrods, spring spacing or high lift valve springs, and normal clearance checks.

S&S 600: The standard cam included in 4" bore S&S engines. For engines larger than 89" with 9.5:1 to 10.5:1 compression ratio and S&S heads. Great addition to a S&S 103" Sidewinder® kit. Requires adjustable pushrods, crankcase clearancing and high lift valve springs. 3500-6500 rpm.

With the exception of the "bolt-in" 500 camshafts, S&S cams are high lift and are designed to take advantage of the extra flow of ported stock heads or S&S Super Stock® heads. Due to the high lift of these cams, high lift valve springs and minor clearancing is required for proper installation.



33-5082

S&S® CAMS SPECIFICATIONS FOR 1986–'19 SPORTSTER® AND 1994–'02 BUELL® MODELS

Cam	Valve Timing[1]		Valve Duration (°)		Valve Lift	Lift @ TDC[2]		Spring Spacing Required	Tappet[3] Type Required
	Intake	Exhaust	Intake	Exhaust		Intake	Exhaust		
	Open BTDC/Close ABDC	Open BBDC/Close ATDC							
S&S 482	22°/38°	43°/11°	240°	234°	.482"	.181"	.134"	No	Hydraulic
S&S 500	34°/50°	56°/28°	264°	264°	.500"	.241"	.212"	No	Solid or Hydraulic
S&S 555	33°/53°	53°/33°	266°	266°	.555"	.240"	.240"	Yes	Solid or Hydraulic
S&S 600	20°/55°	60°/20°	255°	260°	.600"	.194"	.184"	Yes	Solid or Hydraulic

[1]Timing designations is a function of zero lash @ 0.053" off base circle.
[2]TDC lifts are measured at the valve and are for reference only. Overlap valve lifts must be checked on assembled motor.
[3]Requires cam lobe clearancing when used in stock crankcases.

CAMS FOR 1986–'20 SPORTSTER® AND 1994–'02 BUELL® MODELS

Cam Name	Application	Part #
S&S 482	2000–'20	**330-0189**
S&S 500	1991–'20*	**33-5082**
	1986–'90	**33-5081**
S&S 555	1991–'20*	**33-5084**
S&S 600	1991–'20*	**33-5126**
	1986–'90	**33-5125**

**See Notes regarding pinion gears*

DISCLAIMER: NOT LEGAL FOR SALE OR USE IN CALIFORNIA ON ANY POLLUTION CONTROLLED MOTOR VEHICLE. NOT LEGAL FOR SALE OR USE NATIONWIDE ON ANY FEDERAL POLLUTION CONTROLLED MOTOR VEHICLE UNDER THE CLEAN AIR ACT

NOTES

1991–'99 style pinion gear must be used with S&S® cams *(except for 482)* in 2000–'19 Sportster® models and 2000–'02 Buell® models with stock flywheels. See page 262.

2000–'03 Sportster models and 2000–'02 Buell models using S&S flywheels or pinion shafts require the use of '91–'99 style cams and S&S '86–'87 pinion gear and oil pump drive gear.

PINION GEARS

FITMENT
- 1986–'99 Sportster® models
- 1994–'02 Buell® models


33-4153


33-4163


33-4228

PINION GEARS FOR 1986–'87 SPORTSTER® MODELS
REQUIRED FOR ALL S&S FLYWHEEL ASSEMBLIES FOR 1986–'99 SPORTSTER AND 1991–'99 BUELL MODELS

Color Code	Size	HD® Part #	S&S® Part #
Blue	Biggest	*24056-86*	**33-4152**
Red	Average	*24057-86*	**33-4153**
White	Average	*24058-86*	**33-4154**
Green	Average	*24059-86*	**33-4155**
Yellow	Smallest	*24060-86*	**33-4156**

PINION GEARS FOR 1991–'99 SPORTSTER®
WITH STOCK FLYWHEEL ASSEMBLY

Color Code	Size	HD® Part #	S&S® Part #
Blue	Biggest	*24056-91*	**33-4162**
Red	Average	*24057-91*	**33-4163**
White	Average	*24058-91*	**33-4164**
Green	Average	*24059-91*	**33-4165**
Yellow	Smallest	*24060-91*	**33-4166**

Note: Can be used to install S&S cams in 2000-2013 Sportster® engines

PINION SHAFT COMPONENTS FOR 1986–'03 SPORTSTER® MODELS

Item Description	HD® Part #[1]	S&S® Part #
1986–'87 Style Pinion Gear Nut	*7913*	**33-4254**
1986–'87 Style Pinion Shaft Oil Pump Drive Gear	*26318-75*	**33-4228**

[1]Note: No longer available from Harley-Davidson®

NOTE If the stock gear is unmarked and the size is unknown or you are scratch building an engine and have no gear, we recommend that you order a gear in the middle of the size range. These sizes were used more often and should provide adequate gear clearance under most circumstances. When in doubt, use a gear from the middle to the small side of the range because a combination of looser fitting smaller gears is less likely to cause binding and premature wear. Consult the chart for the size and appropriate part number required. If you wish to achieve optimum cam gear to pinion gear fit, consult your factory service manual for instructions on fitting these gears before making a selection. Some sizes, particularly those on and near the ends of each range, are available on a limited basis because they are the extremes.

All reference to HD® part numbers is for identification purposes only. We in no way are implying that any of S&S Cycle's products are original equipment parts or that they are equivalent to the corresponding HD® part number shown.

NEW FOR 2020 FROM S&S CYCLE

PRECISION TAPPETS

High performance tappets are a cornerstone of the S&S line up and we are always looking to improve our products. After months of research and countless hours of testing we are excited to reveal the latest in performance tappets. The S&S Cycle Precision Tappets replace both our standard as well as premium tappets. Each Precision Tappet is hand assembled to exacting tolerances and designed for quiet operation and rapid pump up and all are made in the USA.

FITMENT

- 2000–'20 Sportster® models
- 2000–'02 Buell® models



FEATURES

- Reduced valve train noise from start up to shut down
- Close tolerances for low leak down rates
- Fast pump up and superior high rpm performance

PRECISION TAPPETS

Set of 4 tappets	**330-0718**

STANDARD TAPPETS

FITMENT

- 1986–'90 Harley-Davidson® Sportster® models

FEATURES AND BENEFITS

- Redesigned plunger assembly better withstands forces associated with heavy-duty valve springs and cams typically used in high-performance applications
- Revised metering device precisely controls oil delivery to top end, ensuring rapid lifter pump-up and reducing possibility of oil starvation to bottom end
- Each lifter body and plunger assembly is selective-fit and tested to ensure correct operation
- 1986–'90 (4-speed)
  - Larger inner bearing race reduces stresses to increase axle, bearing and roller life. The S&S inner bearing race is .123" larger in diameter than the "raceless" roller axles currently used by some manufacturers.
  - Improved inner race-roller design allows use of more and larger bearings to increase load—carrying surface area, further reducing stress and wear in the critical roller area.

OPTIONS

- Tappets for 1986–'90 four speed Sportster® models are available with the HL_2T Limited Travel Kit for improved cold starts and high rpm valve timing accuracy.

KIT CONTENTS

- Four hydraulic tappets



33-5352

HIGH PERFORMANCE HYDRAULIC TAPPETS

Fitment	Description	Part #
1991–'99 Sportster®	S&S Standard Tappet *(HL_2T kit not installed)*	**330-0288** USA
1986–'90 Sportster®	S&S Standard Tappet *(HL_2T kit not installed)*	**33-5352** USA
	S&S Standard Tappet *(With HL_2T kit installed)*	**33-5353** USA 1,2,3

NOTE

S&S tappets with HL_2T Kit require the use of adjustable pushrods.
See page 265 for S&S adjustable pushrod options

HIGH QUALITY TAPPET ROLLER & AXLE REPLACEMENT

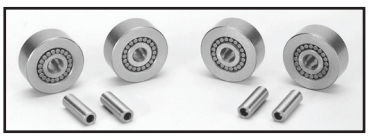

High quality tappet roller and axle replacment kit for 1984–99 HD® big twin and 1986–90 Sportster® models. Kit includes rollers to rebuild 4 tappets.

HIGH QUALITY TAPPET ROLLER AND AXLE REPLACEMENT KIT

Fitment	Part #
Kit includes rollers to rebuild 4 tappets.	**330-0378**

All reference to HD® part numbers is for identification purposes only. We in no way are implying that any of S&S Cycle's products are original equipment parts or that they are equivalent to the corresponding HD® part number shown.

HYDRAULIC LIFTER LIMITED TRAVEL SPACER (HL_2T)

FITMENT
- 1986–'03 Harley-Davidson® Sportster® models
- 1994–'02 Buell® models

FEATURES AND BENEFITS
- Positive valve train activation!
- More horsepower at higher RPMs
- Easier starting

KIT CONTENTS
- Set of four spacers



HYDRAULIC LIFTER LIMITED TRAVEL SPACER (HL_2T)

Fitment	Part #
1986–'03 Sportster® with stock or S&S® tappets (fits tappets with .612" I.D.)	**33-5338**

TAPPET GUIDES

FITMENT
- 1986–'90 Harley-Davidson® Sportster®
- S&S Super Stock® crankcase
- S&S Special Application crankcase

FEATURES AND BENEFITS
- Unlike cast aluminum, billet has no internal voids or impurities
- No residual strain from thermal contraction or expansion means no cracking or changes in shape
- Simple to install upgrade that looks great
- Tappet guides for special application cases have correct pushrod angles for ½" camchest offset

KIT CONTENTS
- Guides
- O-rings
- Installation hardware



33-5375

TAPPET GUIDE SETS FOR SPORTSTER®, SUPER STOCK®,AND SPECIAL APPLICATION CRANKCASES

Application	Set
1986–'90 Stock/S&S® Super Stock	**33-5375** USA
1986–'90 S&S Special Application	**33-5365**
1991–'99 S&S Super Stock	**33-5389**

NOTE

2000 and later Sportster models use the same tappet as 1999–up big twin engines. However, these tappets will not fit the S&S tappet guides for 1991–'99 models.

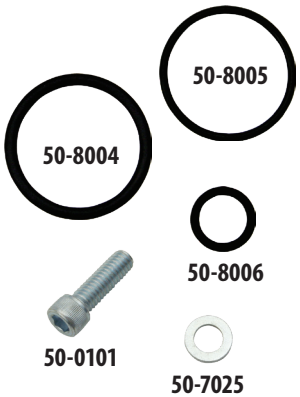

REPLACEMENT PARTS FOR TAPPET GUIDES

Description		Part #
Tappet Guide O-ring Kit *Fits 1986–'90 Sportster models with stock or S&S crankcases and 1991–'99 Sportster models with S&S crankcases* ***1167A***		**50-8153**
Upper O-ring, 1" I.D. x 13⁄16" O.D .x 3⁄32" CS Viton® *11167*	*each*	**50-8004**
Lower O-ring, 1" I.D. x 1⅛" O.D. x 1⁄16" CS Viton *11168A*	*each*	**50-8005**
Oil Passage O-ring, ⅜" I.D. x ½" O.D. x 1⁄16" CS 70 Buna *11110*	*each*	**50-8006**
	10 pack	**50-8077**
Screw, SHC, 5⁄16-18 x 1", Zinc *3201WA, 2708*	*each*	**50-0101**
Washer, Flat, .325" x .548" x .062", Zinc, Low Carbon Steel *6771*	*each*	**50-7025**

All reference to HD® part numbers is for identification purposes only. We in no way are implying that any of S&S Cycle's products are original equipment parts or that they are equivalent to the corresponding HD® part number shown.

QUICKEE ADJUSTABLE PUSHRODS

FITMENT
- 1991–'20 Harley-Davidson® Sportster® models
- 1994–'02 Buell® models

FEATURES AND BENEFITS
- Easy to install
- Adjustable to ensure consistent valve train operation under all conditions

KIT CONTENTS
- Pushrods
- Pushrod covers and keepers
- O-rings

NOTES

Quickee pushrods cannot be used in the S&S® SB-100 engine.

33-5355 adaptors, 93-4039 cover kit and 93-4101 keepers are needed when used on 1991–2003 applications.

REPLACEMENT PARTS: SEE PAGE 266

WATCH THE S&S PUSHROD INSTALLATION VIDEO AT SSCYCLE.COM/MEDIA/VIDEOS



930-0023

QUICKEE ADJUSTABLE PUSHRODS FOR 1991–'20 HARLEY-DAVIDSON® SPORTSTER® MODELS

Description	Part #
Complete Kit, for 2004–'19 xl	**930-0023**
Pushrod Set only, for 1991–'19 xl	**93-5122**

STANDARD ADJUSTABLE PUSHRODS

FITMENT
- 1986–'20 Harley-Davidson® Sportster® models
- 1994–'02 Buell® models

FEATURES AND BENEFITS
- Made out of 7/16" O.D. chromoly steel tubing for strength and durability
- Adjustable to ensure accurate valve train operation under all conditions
- Compatible with solid and hydraulic lifters
- Kit includes all pushrods, covers, keeper and o-rings

KIT CONTENTS
- Pushrods
- Pushrod covers and keepers
- O-rings

NOTES

S&S pushrod sets are available separately for those who wish to use an aftermarket pushrod cover other than S&S.

33-5355 pushrod cover adaptors are required for 1991–'03 applications.
See page 266

REPLACEMENT PARTS: SEE PAGE 266

WATCH THE S&S PUSHROD INSTALLATION VIDEO AT SSCYCLE.COM/MEDIA/VIDEOS



930-0024

STANDARD ADJUSTABLE PUSHRODS FOR 2004–'20 HARLEY-DAVIDSON® SPORTSTER® MODELS

Description	Part #
Complete Kit	**930-0024**
Pushrod Set only	**93-5022**

PUSHROD SETS FOR 1991–'03 SPORTSTER® AND 1994–'02 BUELL® MODELS

Displacement	Cylinder Length	Part #
883cc, 1200cc, 79"	4.650" (Stock)	**93-5022**
89"	5.087" (+0.437)	**93-5089**

PUSHROD SETS FOR 1986–'90 SPORTSTER® MODELS

Displacement	Cylinder Length	Part #
883cc, 1200cc, 79"	4.650" (Stock)	**93-5033**
89"	5.087" (+0.437)	**93-5022**

PUSHROD COVERS AND RELATED PARTS

FITMENT

- 1986–'20 Harley-Davidson® Sportster®
- 1994–'02 Buell®

PUSHROD REPLACEMENT PARTS

Item Description		Part #
S&S Pushrod Cover Kit* *(includes Top and bottom covers, Cover cap, Cover spring, Spring washers, and o-rings)*	Stock Height	93-4039*
	1" or more taller than stock	93-4038*
Cover Cap Washer *6762B*		50-7131
Bottom Cover Washer		50-7150
Top O-ring *11132A*		50-8039
Middle O-ring		50-8038
Bottom O-ring		50-8037
Top Cover		93-4016
Bottom Cover		93-4015
Cover Cap		93-4017
Cover Spring		93-4018
Pushrod O-ring Kit		93-4022
Ball End	Fits S&S adjustable with 5/16"-32 threads. *(Manufactured after 2-1-1996)*	93-5002
Adjusting Unit Locknut	Fits S&S adjustable pushrods with early stock 9/32"-32 threads	33-5333
	Fits S&S adjustable pushrods with 5/16"-32 threads. *(Manufactured after 2-1-1996)*	93-5003-S

**1991-'03 Sportster and 1994-'02 Buell models require S&S pushrod cover adaptor kit part #33-5355 to use two-piece pushrod covers.*



S&S pushrod cover adapters for five-speed Sportster models are designed to convert stock 1991–'03 crankcases to accept 1986–'90 style pushrod cover assemblies in order to allow access to adjustable pushrods. 2004–up Sportster models do not require these adapters.

PUSHROD COVER ADAPTER

Set of four	33-5355



PUSHROD COVER KEEPER SETS±

Application		Length	Part #
2004–'20 Sportster® Pushrod covers	883cc & 1200cc	(2.600")	**93-4101**
1991–'03 Sportster and 1994–'02 Buell® with Stock Cases and S&S Adaptors	883cc & 1200cc	(2.600")	**93-4101**
	79"	(2.600")	**93-4101**
	89"	(3.000")	**93-4103**
1986–'90 Sportster with Stock or S&S Cases	883cc & 1200cc	(2.800")	**93-4115** USA *17950-86*
	79"	(2.800")	**93-4115** USA *17950-86*
	89"	(3.100")	**93-4104**
	100"	(3.000")	**93-4103**

± ⚠ WARNING: Cancer and Reproductive Harm – www.P65Warnings.ca.gov



93-4101

All S&S pushrod keepers are chromed steel except part #93-4109. Keeper #93-4109 is intended for unusually tall engines. It is manufactured of unchromed stainless steel to prevent rust or peeling after it is trimmed to the required length. Keepers are sold in sets of four.

PUSHROD COVER KEEPER SET

Length / Finish		Part #
2.390" / Gloss Black		**930-0127**
2.400" / Chrome USA		**93-4070**± *17950-48*
2.500"	Chrome	**93-4100**±
	Gloss Black	**930-0142**
2.600"	Chrome	**93-4101**±
	Gloss Black	**930-0128**
2.800" / Chrome USA		**93-4115**± *17950-86*
2.900"	Chrome	**93-4102**±
	Gloss Black	**930-0126**
3.000" / Chrome		**93-4103**±
3.100"	Chrome	**93-4104**±
	Gloss Black	**930-0125**
3.200" / Chrome		**93-4105**±
3.330" / Chrome USA		**93-4106**± *17949-40, 17950-66*
3.500" / Chrome		**93-4107**±
3.625" / Chrome		**93-4108**±
4.250"*		**93-4109**

**Custom, extra long stainless steel 4.250", customer to cut to required length*

± ⚠ WARNING: Cancer and Reproductive Harm – www.P65Warnings.ca.gov

All reference to HD® part numbers is for identification purposes only. We in no way are implying that any of S&S Cycle's products are original equipment parts or that they are equivalent to the corresponding HD® part number shown.

SIDEWINDER® .650" LIFT VALVE SPRINGS

FITMENT
- 1986–'20 Harley-Davidson® Sportster® models with stock heads

FEATURES AND BENEFITS
- Works well with cams up to .650" lift
- Manufactured from ultra clean high silicon Kobe alloy wire then micro shot peened and nitrided
- CNC machined 9° locks
- High performance conical single wire spring
- Chromoly forged retainers

KIT CONTENTS
- Valve keepers, top & bottom collars, springs, shims
- Valve guide seals *(not included in kit for 1999–'04 xl)*

S&S® .650" LIFT SPRINGS SPECIFICATIONS

Lift	Installed Height	Seat Force	Force @ Max Lift	Max RPM
.650"	1.860"	178 lb.	376 lb.	6500



106-5909

.650" LIFT SPRING KIT

Description	Part #
1986–2003 (5⁄16" valve stems)	**900-0050**
2004–2020 (7mm stems)	**106-5909**

NOTE S&S recommends roller rocker arms be used with lifts over .585"

STREET PERFORMANCE .585" VALVE SPRINGS

FITMENT
- 1986–'20 Harley-Davidson® Sportster® models / 1995–'02 Buell models

FEATURES AND BENEFITS
- Dual springs reduce the risk of valve float
- Suitable for high performance applications
- Accommodates camshaft lift to 0.585"

KIT CONTENTS
- Valve Guide Seals, Springs, Top & Bottom Collars, Keepers, Shims

S&S® .585" LIFT SPRINGS SPECIFICATIONS

Lift	Installed Height	Seat Force	Force @ Max Lift
.585"	1.850"	135 lb.	325 lb.

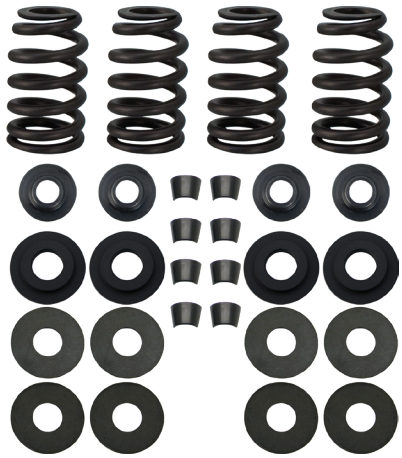

900-0593

STREET PERFORMANCE .585" VALVE SPRING KIT

Description	Part #
1986–'03 Sportster® & 1995–'02 Buell® (5⁄16" valve stems)	**900-0593**
2004–'20 Sporsters® (7mm stems)	**900-0594**
S&S Super Stock Heads	**900-0595**

VALVE SPRING REPLACEMENT PARTS: SEE PAGE 302

FORGED ROCKER ARMS



FITMENT

- 1986–'20 Harley-Davidson® Sportster® models
- 1994–'02 Buell® models

FEATURES AND BENEFITS

ROLLER ROCKER ARMS

- Extremely durable rollers reduce valve stem side thrusting with high lift cams
- Superior wear and fatigue resistance even in the most demanding applications
- ¾" long bushings provide 50% more bushing support area than ½" long bushings
- Ideal for cams of any lift

STANDARD ROCKER ARMS

- ¾" long bushings provide 50% more bushing support area than ½" long bushings
- An economical alternative for cams up to .585" lift

KIT CONTENTS

- 2 front and 2 rear rocker arms

FORGED ROLLER ROCKER ARM KIT

Description	Part #
2 front and 2 rear rocker arms *5*	**900-4065A**

Adjustable pushrods must be used with S&S roller rocker arms to obtain proper valve clearance.
New rocker arm shafts are recommended for maximum performance and rocker life.



900-4119A

STANDARD FORGED ROCKER ARM KIT

Description	Part #
2 front and 2 rear rocker arms	**900-4119A**

New rocker arm shafts are recommended for maximum performance and rocker life.



90-4036

ROCKER ARM SHAFTS

Description	Part #
Set of 4 *17611-83B*	**90-4036**
Individual *17611-83B* 1,2,3	**90-4006**

New rocker arm shafts are recommended for maximum performance and rocker life.



90-4104

REPLACEMENT PARTS FOR FORGED ROLLER ROCKER ARMS

Rocker Arm Type	Description	Part #
Roller	Front exhaust or rear intake rocker arm 1,2,3	**900-4065FA**
	Rear exhaust or front intake rocker arm 1,2,3	**900-4065RA**
Standard	Front exhaust or rear intake rocker arm *17375-83A*	**900-4119FA**
	Rear exhaust or front intake rocker arm *17360-83A*	**900-4119RA**
Roller	Rebuild kits (rebuilds 4 rocker arms)	**90-4104**
Roller & Standard	Rocker arm bushing (¾" long) 1,2,3	**90-4014**

NOTES

S&S roller rocker arms are recommended for use with cams having more than 0.585" of lift.
Adjustable pushrods must be used with S&S roller rocker arms to obtain proper valve clearance.
New rocker arm shafts are recommended for maximum performance and rocker life.

All reference to HD® part numbers is for identification purposes only. We in no way are implying that any of S&S Cycle's products are original equipment parts or that they are equivalent to the corresponding HD® part number shown.

CNC PORTED CYLINDER HEAD SERVICES

CNC PORTING SERVICE FEATURES AND BENEFITS

- CNC machined ports are consistent—repeatable performance increase
- High flow and high port velocity—great power without losing low RPM torque
- Assembled with performance valves and your choice of .585" or .650" lift springs ready to bolt-on
- Stock heads with S&S CNC porting are also available for outright sale in select models

XL CNC

- Available for 2004–'20 xl 883 and 1200cc engines
- Combustion chamber volume of 60cc—For stock compression in 1200cc engines
- 883 engines must to upgraded to 1200cc or greater
- Perfect for the S&S 1200cc and 1250cc kits.



909-0011

CNC PORTING SERVICE FOR SPORTSTER® MODELS

Description	Part #
CNC Porting Service—S&S Ports Your Heads	**909-0011**
CNC Ported Heads—Complete Set Sold Outright	**909-0011**

DISCLAIMER: NOT LEGAL FOR SALE OR USE IN CALIFORNIA ON ANY POLLUTION CONTROLLED MOTOR VEHICLE. NOT LEGAL FOR SALE OR USE NATIONWIDE ON ANY FEDERAL POLLUTION CONTROLLED MOTOR VEHICLE UNDER THE CLEAN AIR ACT

S&S® CNC PORTING SERVICE – SPECIFICATION COMPARISON — HARLEY-DAVIDSON® SPORTSTER® MODELS

Heads	Valve Size		Max Valve Lift	Max TDC Lift		Port Flow		Chamber Volume
	Intake	Exhaust		Intake	Exhaust	Intake	Exhaust	
Stock	1.805	1.575	.585	–	–	218.2 cfm	186.7 cfm	60cc
CNC Ported by S&S	1.830	1.575	.650	.213	.215	249.3 cfm	206.0 cfm	60cc

**Flow testing performed on a SuperFlow® 1020 flow bench at 28" of water test pressure at .600" lift. Heads tested are 2007-'13 style.*

Heads	COMPRESSION RATIO	
	1200cc	With .03 Head Gaskets
Stock 60cc	9.7	10:1
CNC Ported by S&S 60cc	9.7	10:1

***As a general rule of thumb, for every 1cc decrease in chamber volume equals a .1 increase in compression ratio.*

NOTES

For xl applications. S&S recommends for use with cam TDC lifts no greater than: .213" intake, .215" exhaust to achieve .050" valve to valve clearance.

CNC porting is not available for previously ported heads, heads that have been structurally damaged, or heads that are determined to be unserviceable during initial inspection. These heads will be returned to the customer without modification. In these cases, the customer will be notified and options will be reviewed. As an alternative, S&S heads or CNC ported stock heads are available for purchase.

Due to variations in stock cylinder head castings, all inside surfaces of the ports may not "clean up" during machining. As a result, the inside of one or more ports may not appear to be completely machined. This does not effect performance and is not considered a defect.

CNC porting is not currently available for Harley-Davidson® CVO engines or Screamin' Eagle® cylinder heads.

SUPER STOCK® CYLINDER HEADS
FOR 4" BORE S&S ENGINES

FITMENT
- SB-Series for Harley-Davidson® Sportster® 1986–'03
- SB-Series for Buell® 1994–'02

FEATURES AND BENEFITS
- Machined for S&S manual or electric compression releases
- 2.000" intake valves and 1.605" exhaust valves
- Special "cast-to-shape" intake ports with a special directional fin for improved air flow
- Precision CNC machined from heat treated aircraft quality aluminum castings
- Machined with S&S 4" cylinder stud pattern and '86–90 S&S SA pushrod hole locations

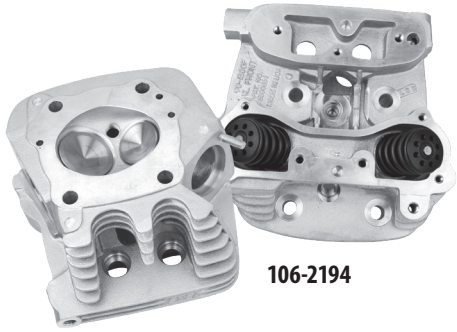

106-2194

KIT CONTENTS
- 2 fully assembled cylinder heads in Natural or Wrinkle Black with S&S .650" lift springs
- Threaded plugs to seal compression release holes if no compression releases are used

SUPER STOCK® HEAD KITS FOR 4" BORE S&S ENGINES

Application	Natural
1986–'03 Sportster® models	**106-2194**
1994–'02 Buell® models	**106-2297**

THESE KITS REQUIRES SPECIAL S&S PISTONS AND GASKETS. Order the required piston oversize and gaskets from the charts below.



92-1420

4" PISTON KITS FOR 1986–'03 HARLEY-DAVIDSON® SPORTSTER® MODELS

Oversize	Part #
Standard	**92-1420**
+0.010"	**92-1421**
+0.020"	**92-1422**

Kits include a set of pistons, rings, wristpins and keepers.



90-1909

4" BORE GASKET KIT FOR 1986–'03 HARLEY-DAVIDSON® SPORTSTER® MODELS

Description	Part #
Head, Base, and Exhaust Gaskets	**90-1909**

REPLACEMENT PARTS: SEE PAGE 288

NOTE Due to expanded stud pattern, these heads will not fit on stock Sportster® Evolution® engines.

3-1/2" AND 3-5/8" SUPER STOCK® CYLINDER HEADS

FITMENT
- 1986–'03 Harley-Davidson® Sportster®
- 1994–'02 Buell® (heads require S&S Super stock pistons)



FEATURES AND BENEFITS
- Machined with a stock bolt pattern
- Larger, more open combustion chamber presents less resistance to air flow around the valves
- 2.000" intake valves and 1.605" exhaust valves
- Special "cast-to-shape" intake ports with a special directional fin for improved air flow
- Precision CNC machined from heat treated aircraft quality aluminum castings

KIT CONTENTS
- Complete head assembly in Natural or Wrinkle Black with valves and S&S .650" lift springs

REPLACEMENT PARTS: SEE PAGE 288

ASSEMBLED S&S® SUPER STOCK® HEAD KITS

Application	Natural	Wrinkle Black
1991–'03 Sportster® models	**90-1310**	**90-1810**

DISCLAIMER: NOT LEGAL FOR SALE OR USE IN CALIFORNIA ON ANY POLLUTION CONTROLLED MOTOR VEHICLE. NOT LEGAL FOR SALE OR USE NATIONWIDE ON ANY FEDERAL POLLUTION CONTROLLED MOTOR VEHICLE UNDER THE CLEAN AIR ACT

THESE KITS REQUIRES SPECIAL S&S PISTONS AND GASKETS. Order the required piston oversize and gaskets from the charts below.



3⅝" FORGED PISTON KITS FOR S&S® SUPER STOCK® HEADS

Oversize	Low Compression
+0.010"	**92-1081**

Piston kits include set of pistons, rings, wristpins, and clips.
Recommended piston fit: Close: 0.0023"- 0.0025" Loose: 0.0035"- 0.0045"

FOR COMPRESSION RATIOS AND CYLINDER KITS SEE PAGE 258

3½" BORE FORGED PISTON KITS FOR S&S® SUPER STOCK® HEADS (10.5:1 COMPRESSION)

Oversize	Deck Height	Part #
Standard	1.1875"	**92-2016**
+0.010"		**92-2017**
+0.020"		**92-2018**

Piston kits include set of pistons, rings, wristpins, and clips. Recommended piston fit: Close: 0.0025" -0.003" Loose: 0.0030"-0.0040"

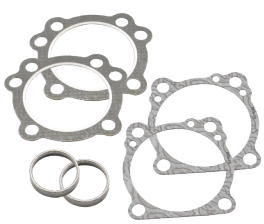

90-1907

GASKET KITS FOR S&S® SUPER STOCK® CYLINDER HEADS

Bore Size	Part #
3½"	**90-1907**
3⅝"	**90-1908**

CYLINDER HEAD AND MOTOR MOUNTS

HEAD MOUNTS FOR SPORTSTER® MODELS

Two head mounts are required for 1986–'03 Harley-Davidson® Sportster® models. The center mount is a two-piece design for maximum flexibility. The front mount is one piece and available in two versions according to cylinder length. Machined from ¼" thick steel and provided in a semi-gloss black finish.

1986–'03 Sportster® Chassis



93-4055

CENTER MOUNT

Fits All Engines	**93-4055**

FRONT MOUNT

Stock to 5.087" Long Cylinders *16214-86, 16222-86*	**93-4056**

HEAD BOLTS WITH WASHERS

HEAD BOLT INFORMATION CHART

Length w/Washer	Washer Thickness	Head Bolt w/Washer	Washers Only
1.690"	.250"	**93-3028**	**50-7091**
1.840"	.150"	**93-3027**	**50-0418-S**
1.920"	.250"	**93-3036**	**50-7091**
2.070"	.150"	**93-3031** USA	**50-0418-S**
2.220"	.250"	**93-3038**	**50-7091**
2.370"	.150"	**93-3032**	**50-0418-S**
3.134"	.250"	**93-3029**	**50-7091**
3.284"	.150"	**93-3030** USA	**50-0418-S**
3.501"	.250"	**93-3037***	**50-7091**
3.651"	.150"	**93-3033***	**50-0418-S**

**Drilled & tapped deeper to allow shortening for custom lengths.*



93-3028

HEAD BOLT WASHERS

Thickness	Part #
.150"	**50-0418-S**
.250"	**50-7091**

HEAD BOLTS FOR 1986–2003 HARLEY-DAVIDSON® SPORTSTER® MODELS

Engine Displacement	Stroke	Cylinder Length	Cylinder Head Type	Short Bolt w/Washer	Long Bolt w/Washer	Head Bolt Kit
883/1100/1200cc S&S 79"	3 13/16"	4.650"	S&S 1986–'90 HD®	**93-3027**	**93-3030** USA	**93-3010** USA
			1991–up HD	**93-3027**	**93-3030** USA	**93-3010** USA
S&S 89"	4 5/16"	5.087"	S&S 1986–'90 HD	**93-3038**	**93-3033**	**93-3013**
			1991–up HD	**93-3032**	**93-3033**	**93-3013**
S&S 91"	3⅝"	4.230"	S&S®	**93-3028**	**93-3029**	**93-3011**
S&S 100"	4"	4.420"	S&S®	**93-3028**	**93-3029**	**93-3011**

CALCULATING CUSTOM HEAD BOLT LENGTHS SEE INSTRUCTIONS ON PAGE 345

Dress up your engine with these magnetic chrome head bolt covers. Easy installation, no tools, no messy adhesives. A powerful magnet holds cover in place, yet allows easy removal. Chrome plated steel looks great on any engine, but is a must for polished engines. For S&S head bolts only.



CHROME HEAD BOLT COVERS

Set of 4	USA **50-0333**

± ⚠ WARNING: Cancer and Reproductive Harm – www.P65Warnings.ca.gov

All reference to HD® part numbers is for identification purposes only. We in no way are implying that any of S&S Cycle's products are original equipment parts or that they are equivalent to the corresponding HD® part number shown.

BILLET ROCKER COVERS

FITMENT

- 1986–'03 Harley-Davidson® Sportster® models
- 1994–'02 Buell® models

FEATURES AND BENEFITS

- OEM-style "umbrella" fittings are included with billet rocker boxes for 1993–'99 big twin engines with cylinder head venting
- S&S billet rocker covers are available in three finishes: show-quality chrome, or unfinished. Unfinished is ideal for powder coating and other custom cosmetic treatments
- Installation on stock and most comparable sized engines can be performed without removing the engine from the frame

KIT CONTENTS

- Covers
- Gaskets
- O-rings
- Mounting hardware

NOTES

The performance-oriented design of the billet rocker boxes permits valve lifts up to .710" with stock or S&S Super Stock® heads, and up to .810" with S&S Special Application heads. S&S roller rocker arms are recommended for high lift cams.

S&S billet rocker covers accept valve springs up to 1.660" O.D. without modification. Cylinder heads must be set up correctly for high-lift cams, and it remains the builder's responsibility to confirm all clearances.

Kits include front and rear cover assemblies with base and top cover, rocker shaft supports, gaskets and o-rings, and instructions

REPLACEMENT PARTS: SEE PAGE 290

ANY JOB IS EASY WITH THE RIGHT TOOLS
S&S ROCKER COVER WRENCH SET, PAGE 325

BILLET ROCKER COVER KITS

Finish	Part #
Chrome	**90-4050**± USA
Unfinished	**90-4055** USA

± ⚠ WARNING: Cancer and Reproductive Harm – www.P65Warnings.ca.gov

REPLACEMENT GASKET KIT

Description	Part #
Includes gaskets for two rocker covers	**90-4049**

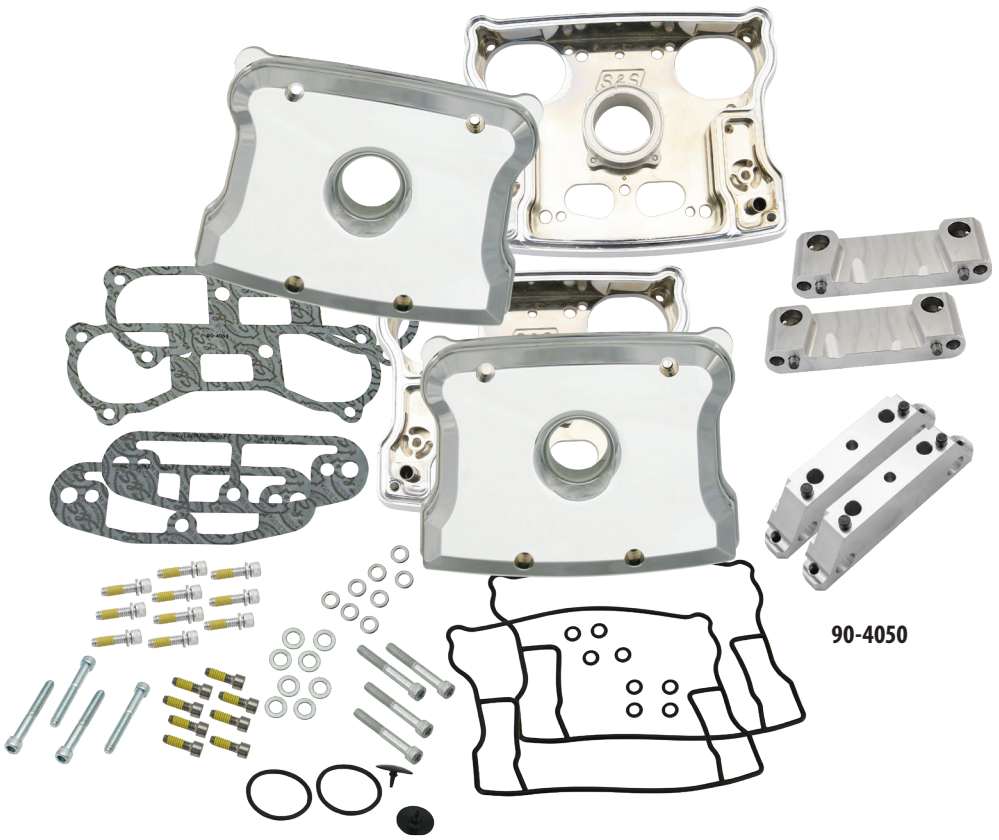

90-4050

SUPER E & G COMPLETE CARBURETOR KITS

FITMENT

- 1986–'06 Harley-Davidson® Sportster® models
- 1994–'02 Buell® models

FEATURES AND BENEFITS

- Four fuel delivery ports — Better throttle response
- O-ring sealed idle mixture screw
- Increased air flow for more power
- Adjustable accelerator pump for quick throttle response and easy starting
- Utilization of the factory dual cable system ensures safe operation
- Direct replacement and high quality fit and finish — less down time and better performance
- Variable position enrichment starting system

KIT CONTENTS

- FULL KIT (For engines with stock length cylinders)
  - Super E carburetor
  - S&S intake manifold (stock length)
  - Classic Teardrop air cleaner kit
  - Mounting hardware and gaskets
  - Instructions
- PARTIAL KIT
  - Super E carburetor
  - Classic Teardrop air cleaner
  - Mounting hardware
  - Gaskets
  - Instructions

REPLACEMENT PARTS: SEE PAGE 300

SUPER E COMPLETE CARBURETOR KITS

Models	Super E
2004–'06 Sportster® models	**11-0470**
1991–'03 Sportster models	**11-0409**
1986–90 Sportster models	**11-0408**

SUPER E PARTIAL KIT (NO MANIFOLD)

Models	Part #
1991–'03 Sportster® models	**11-0443**
1986–'90 Sportster models	**11-0440**

SUPER E & G CARBURETOR ONLY

Fitment	Super E	Super G
All Years & Models	**11-0420**	**11-0421**



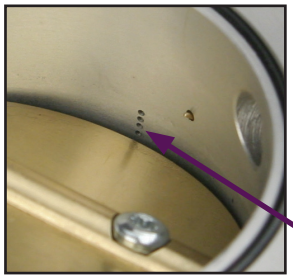

As the throttle plate opens, it exposes more of these holes to engine vacuum and delivers more fuel as rpm increases. When you run out of holes in the intermediate system, the main jet comes in and handles fuel delivery for the higher rpm.

NOTES

Due to inadequate frame clearance, the taller throttle bracket cannot be used on 1986–'03 Harley-Davidson® Sportster® chassis. Therefore, these Sportster models require the installation of earlier butterfly style throttle cables. Kits for 2004–'06 Sportster models are compatible with stock throttle cables.

S&S® does not recommend polishing or chrome plating Super E & G carburetors. Our repair department has seen many carbs with plugged passages due to polishing compounds, and some carbs have been destroyed because the polishing or chrome plating had altered critical machined surfaces.

Recommended for closed circuit use only—S&S Super E & G carburetors shown in this catalog section are not approved for use on motor vehicles operated on California public highways, or in other states where similar pollution laws may apply. The user shall determine the suitability of the product for his or her use and shall assume all risk and liability in connection therewith.

1998–up Buell® models require the use of 1996–'97 throttle assembly.

S&S throttle cables must be used for all Buell applications.

DISCLAIMER: NOT LEGAL FOR SALE OR USE IN CALIFORNIA ON ANY POLLUTION CONTROLLED MOTOR VEHICLE. NOT LEGAL FOR SALE OR USE NATIONWIDE ON ANY FEDERAL POLLUTION CONTROLLED MOTOR VEHICLE UNDER THE CLEAN AIR ACT

BLACK SUPER E & G CARBURETORS



FEATURES AND BENEFITS

- Exclusive black coating – heat and chemical resistant
- Offered in standard venturi or increased venturi diameter – specially machined for 7% more flow

BLACK CARBURETORS FOR 1986-2006 XL MODELS

	Description	Part #
Increased venturi diameter *(7% more flow)*	Super E Carb	**110-0099**
	Super G Carb	**110-0100**
Standard venturi diameter	Super E Carb	**110-0133**
	Super G Carb	**110-0138**

DISCLAIMER: NOT LEGAL FOR SALE OR USE IN CALIFORNIA ON ANY POLLUTION CONTROLLED MOTOR VEHICLE. NOT LEGAL FOR SALE OR USE NATIONWIDE ON ANY FEDERAL POLLUTION CONTROLLED MOTOR VEHICLE UNDER THE CLEAN AIR ACT



NOTE

These black carb kits do not include air cleaners.
Air cleaner options are on page 294

RIGID CARB SUPPORT BRACKETS

FITMENT

- 1986–'03 Harley-Davidson® Sportster® models, 1994-'02 Buell® models

SUPPORT BRACKET, AIR CLEANER TO HEAD

Application	Stock Carb and S&S Air Cleaner
	Part #
1986–'03 Sportster® & 1994–'02 Buell® models	**17-0311**



BREATHER CONVERSION KIT

FITMENT

- 1991–'03 Harley-Davidson® Sportster®

FEATURES AND BENEFITS

- Instead of o-rings, banjo fittings are sealed with durable silicon coated washers

BREATHER CONVERSION KIT

Fitment	Part #
Super E 1⅞" Carb	**17-0487**



17-0487

Breather conversion kit for xl engines updates earlier S&S® air cleaner kits for 1991–'03 Sportster® models to the latest breather hardware.

TWO CABLE THROTTLE ASSEMBLIES

Harley-Davidson® Sportster® models 1987–'03 originally fitted with a constant velocity (CV) carb require conversion to butterfly style throttle cables to work with the S&S butterfly type carburetor. The throttle cables shown in the chart below are designed for this application. S&S Super E carb kits for 2004–'06 Sportster models are designed to accept the stock throttle cables.

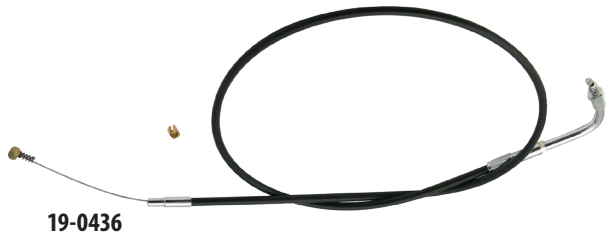

19-0436

FITMENT

- 1986–'03 Harley-Davidson® Sportster® models
- 1996–'02 Buell® models

S&S® THROTTLE CABLE APPLICATION CHART

Application	Fastening Method	Length Total Housing	Length Vinyl Housing	Open Side	Close Side
1996–'03	Snap-in	36"	32"	**19-0436**	**19-0437**
1986–'95	Threaded	36"	32"	**19-0432**	**19-0433**
1996–up Custom	Snap-in	42"	38"	**19-0440**	**19-0441**
1986–'95	Threaded	42"	38"	**19-0446**	**19-0447**

**1998 and later required Harley-Davidson® throttle assembly #71831-96*

REPLACEMENT PARTS

Description	Part #
S&S Universal Throttle Cable	**106-3520**
Throttle Grip Clamp Set 1985–'95	**106-3519**
Top Throttle Grip Clamp only	**19-0222** USA
Bottom Throttle Grip Clamp only	**19-0220** USA
Throttle Grip Clamp Screw *(Fits S&S throttle assemblies: Part #19-0448, #19-0449, #19-0482, #19-0450, and #19-0229)*	**50-0043**
Throttle Grip Set	**106-3521**
Right Hand Grip only	**19-0225** USA
Left Hand Grip only	**19-0226** USA
Cable Adjuster Fits S&S throttle assembly part #19-0229.	**19-0223**
Cable Adjuster Jam Nut Fits S&S throttle assembly part #19-0229	**19-0227**
Handlebar Spacing Sleeve 4" x 1" O.D. – converts ⅞" handlebars to 1" O.D.	**19-0235** USA



19-0235

106-3521



106-3520

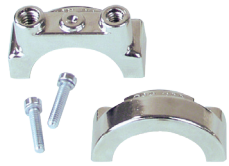

106-3519



19-0223

50-0043

19-0227

NOTES

The chart on this page is used only when using throttle cable bracket part #11-2339. This bracket is standard on all S&S® Super E & G carburetor kits for Harley-Davidson® Sportster® models with the exception of the kit for 2004–'06 models.

1987–'03 Sportster models originally fitted with a constant velocity (CV) carb require conversion to butterfly style throttle cables to work with the S&S butterfly type carburetor. S&S Super E carb kits for 2004–'06 Sportster models are designed to accept the stock throttle cables.

JETS & CARB REBUILD KITS
FOR S&S SUPER E & G CARBURETORS

For those who need to rejet their carburetor because of engine modifications, exhaust modifications, or changes in altitude, we have extra jet kits available which are designed to cover most jetting situations.

DEALER JET KITS±

Description	Part #
S&S Carb Parts Kit *(Contains needed parts to maintain S&S Super E and G carburetors)*	**11-3103**
S&S Jet Kit *(Includes 3 each of all intermediate jets and 5 each of all main jets, plus a main jet tool)*	**11-3102**

±⚠WARNING: Cancer and Reproductive Harm – www.P65Warnings.ca.gov



11-3103±

JET PACKS±

Description	Part #
Low Range Jet Pack – *For jetting most stock and moderate performance engines.*	
Includes one each intermediate jets *(.025", .0265", .028", .0295")* one each main jets *(.062", .064", .066", .068", .070", .072", .074")*	**11-7270**
High Range Jet Pack – *For jetting some stock and all performance engines*	
Includes one each intermediate jets *(.0295", .031", .032", .033")* and one each main jets *(.072", .074", .076", .078", .080", .082", .084")*	**11-7271**
Master Jet Pack – *For jetting all Super B, E, and G equipped engines*	
Includes one each intermediate jets *(.025", .0265", .028", .0295", .031", .032", .033")* and one each main jets *(.062", .064", .066", .068", .070", .072", .074", .076", .078", .080", .082", .084").*	**11-7272**

±⚠WARNING: Cancer and Reproductive Harm – www.P65Warnings.ca.gov



11-3102±

INTERMEDIATE JETS - SERIES #94 INDIVIDUAL SELECTION±

Size	QTY	Part #	Size	QTY	Part #
.025	each	**11-0250**	.032	each	**11-0320**
	3 pack	**11-7107**		3 pack	**11-7112**
.0265	each	**11-0265**	.033	each	**11-0330**
	3 pack	**11-7108**		3 pack	**11-7113**
.028	each	**11-0280**	.036	each	**11-0360**
	3 pack	**11-7109**		3 pack	**11-7114**
.0295	each	**11-0295**	.040	each	**11-0400**
	3 pack	**11-7110**		3 pack	**11-7115**
.031	each	**11-0310**	Blank	each	**11-0000**
	3 pack	**11-7111**			

±⚠WARNING: Cancer and Reproductive Harm – www.P65Warnings.ca.gov


11-7272±


106-3517±

Early Series #94 gas jets were stamped with single digit numbers. Conversions for these numbers are:

1.....025"	4.....033"
2.....028"	5.....036"
3.....031"	6.....040"

NOTES

No returns or exchanges on jets.

MAIN JETS - SERIES #72 INDIVIDUAL SIZE SELECTION±

Size	QTY	Part #	Size	QTY	Part #
.040	each	11-4040	.080	each	11-4080
	5 pack	11-7220		5 pack	11-7240
.042	each	11-4042	.082	each	11-4082
	5 pack	11-7221		5 pack	11-7241
.044	each	11-4044	.084	each	11-4084
	5 pack	11-7222		5 pack	11-7242
.046	each	11-4046	.086	each	11-4086
	5 pack	11-7223		5 pack	11-7243
.048	each	11-4048	.088	each	11-4088
	5 pack	11-7224		5 pack	11-7244
.050	each	11-4050	.090	each	11-4090
	5 pack	11-7225		5 pack	11-7245
.052	each	11-4052	.092	each	11-4092
	5 pack	11-7226		5 pack	11-7246
.054	each	11-4054	.094	each	11-4094
	5 pack	11-7227		5 pack	11-7247
.056	each	11-4056	.096	each	11-4096
	5 pack	11-7228		5 pack	11-7248
.058	each	11-4058	.098	each	11-4098
	5 pack	11-7229		5 pack	11-7249
.060	each	11-4060	.100	each	11-4100
	5 pack	11-7230		5 pack	11-7250
.062	each	11-4062	.102	each	11-4102
	5 pack	11-7231		5 pack	11-7251
.064	each	11-4064	.104	each	11-4104
	5 pack	11-7232		5 pack	11-7252
.066	each	11-4066	.106	each	11-4106
	5 pack	11-7233			
.070	each	11-4070	.110	each	11-4110
	5 pack	11-7235		5 pack	11-7255
.072	each	11-4072	.115	each	11-4115
	5 pack	11-7236		5 pack	11-7256
.074	each	11-4074	.120	each	11-4120
	5 pack	11-7237		5 pack	11-7257
.076	each	11-4076			
	5 pack	11-7238			
.078	each	11-4078			
	5 pack	11-7239			

± ⚠ WARNING: Cancer and Reproductive Harm – www.P65Warnings.ca.gov

MAIN JET AIR BLEED KIT± (One Jet Each Size)

Sizes	Part #
.042" – .060"	106-3517
.084" – .120"	106-3518

± ⚠ WARNING: Cancer and Reproductive Harm – www.P65Warnings.ca.gov

S&S® CARBURETOR REBUILD KITS

To insure that you continue to get the utmost in performance from your S&S carburetor, we have put together a series of rebuild kits that are designed to provide the proper parts to return a worn carburetor to top shape. We have assembled different types of kits to cover the different degrees of rebuild necessary.

MASTER REBUILD KITS

Master rebuild kits contain a body rebuild kit, accelerator pump rebuild kit (Super E and G only), all new fasteners, springs, idle mixture screw, seat, and needle assembly. Everything needed to completely rebuild one carburetor.

MASTER REBUILD KIT±

Description	Part #
Super E	11-2923
Super G	11-2924

± ⚠ WARNING: Cancer and Reproductive Harm – www.P65Warnings.ca.gov

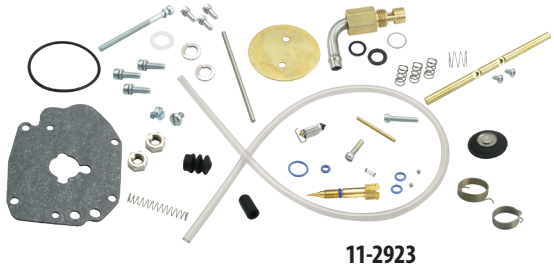

11-2923

BODY REBUILD KITS

Body rebuild kits for Super E and G carbs also contain throttle shaft nuts, nylon washers, accelerator pump o-ring, and accelerator pump boot. Body rebuild kits for Super E and G carbs do not contain throttle shaft bushings since these carbs have stainless steel throttle shaft bushings already installed.

BODY REBUILD KIT±

Description	Part #
Super E	11-2906
Super G	11-2907



11-2907

± ⚠ WARNING: Cancer and Reproductive Harm – www.P65Warnings.ca.gov

BASIC REBUILD KIT

A gasket and seal kit for low mileage Super E & G carbs. Perfect to reassemble carbs taken apart for inspection and cleaning.

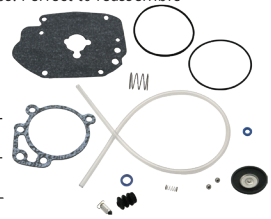

BASIC REBUILD KIT±

Description	Part #
Super E & G	110-0067

± ⚠ WARNING: Cancer and Reproductive Harm – www.P65Warnings.ca.gov

ACCELERATOR PUMP REBUILD KITS

Accelerator pump rebuild kits contain diaphragm, diaphragm spring, check balls, check ball spring, pump pushrod, and required hardware and o-rings.

ACCELERATOR PUMP REBUILD KIT

Description	Part #
Super E & G	11-2918



MANIFOLD CONVERSION KITS

FITMENT
- 1986–'03 Harley-Davidson® Sportster® models
- Can be used with S&S Super B and Super E carburetors, as well as stock carburetors with a two-bolt mounting pattern

FEATURES AND BENEFITS
- Increased airflow
- Eliminates the possibility of severe engine damage due to extreme lean conditions created by cracks in stock rubber manifolds

KIT CONTENTS
- Manifold
- Front and rear mounting flanges
- Manifold o-rings
- Aluminum spacer shims



16-1650

MANIFOLD CONVERSION KITS FOR SPORTSTER® MODELS

Year	Cylinder Length	Size No.	Part #
1986–'03	4.650"	341	**16-1650***

**Fits S&S ES, LS, Super B, Super E, Tillotson®, Bendix®, Keihin®*

NOTES

These manifolds may change the way a stock carburetor and air cleaner assembly fit. This means that these components may require shimming and/or a slight change in mount bracketing.

S&S style o-rings must be used with these manifolds. S&S o-rings are slightly thinner to accommodate the larger S&S port diameter. Use of stock o-rings may damage the manifold.

REPLACEMENT PARTS MANIFOLD CONVERSION KIT

Description			Part #
Manifold			**16-1620**
Flanges	Front *27009-86A*	*each*	**16-0232**
		5 pack	**16-0600**
	Rear *27010-86A*	*each*	**16-0233**
		5 pack	**16-0601**
	Set (Front & Rear)		**106-3516**
O-rings		*each*	**16-0235**
		10 pack	**16-0243**
0.350" Spacers			**50-7044**

INTAKE MANIFOLDS

FITMENT
- 1986–'06 Harley-Davidson® Sportster® models
- S&S carburetors and other carbs with the same mounting bolt pattern

FEATURES AND BENEFITS
- Increases airflow



16-1620



16-1519

MANIFOLDS FOR 2004–'06 HARLEY-DAVIDSON® SPORTSTER® MODELS

Displacement	Cylinder Length	Size No.	S&S Super E
1200cc	Stock (4.650")	335	**16-1519***

**Replacement for manifold supplied in S&S part #11-0470 Super E carb kit. 1⅞" bore.*

REPLACEMENT PARTS FOR MANIFOLDS

Description	Part #
Manifold Fitting VOES Rubber Cap, 3⁄16" I.D. x 5⁄16" O.D. x ½"	**50-8372**
Manifold Vacuum Fitting	**16-0136-S**



16-0136-S



50-8372

MANIFOLDS FOR 1986–'03 HARLEY-DAVIDSON® SPORTSTER® MODELS

S&S Engine Kit Displacement	Cylinder Length	Size No.	Carburetor Type	
			S&S ES, LS, Super A, B, E, Tillotson®, Bendix®, Keihin®	Super G
883cc,1100cc, 1200cc, 79"	Stock (4.650")	341	**16-1620**	**16-2520**
100"	4.420"	357	–	**16-2559**
103"	5.750"	426	–	**16-2532**
Special Order*	Specify	–	–	–

Manifolds available in 1⅞", 2⅛", or 2¼" bore.

MANIFOLDS FOR 1994–'02 BUELL® MODELS

MANIFOLDS FOR 1994–'02 HARLEY-DAVIDSON® BUELL® MODELS

Engine Displacement	Cylinder Length	Syize Number	Super E Part #	Super G Part #
1200cc, 79"	Stock - 4.650"	341	**16-1520**	–
S&S SB100	4.420"	357	–	**16-2569**



16-1520

NOTES

S&S manifolds for Buell models are not interchangeable with manifolds for Harley-Davidson® Sportster® models as they position the carburetor about ¼" higher. This change in position will cause misalignment of mounting hardware.

S&S style o-rings must be used with these manifolds. S&S o-rings are slightly thinner to accommodate the larger S&S port diameter. Use of stock o-rings may damage the manifold.

HIGH OUTPUT COILS



55-1576



55-1571

HIGH OUTPUT COILS

S&S High Output 3.0Ω Single Fire Coil	Part #
The perfect complement for S&S IST ignition systems. This single fire coil is actually two separate coils in a single package. Coil impedance is 3Ω per coil.	**55-1571**
S&S High Output 0.5Ω Single Fire Coil USA	**55-1576**
High output 0.5Ω single fire coil for S&S IST ignition. 55-1571	

GASKETS

TOP END GASKET KITS FOR S&S SB-SERIES ENGINES 1986–'03

4"	**90-9503**
3⅝"	**90-9509**

CYLINDER HEAD, BASE & EXHAUST GASKET KITS FOR S&S SB-SERIES ENGINES 1986–'03

4"	.043" Micropore	**90-1909**
3⅝"	.045" Micropore	**90-1908**
3½"	.045" Micropore	**90-1907**
	.030" Layered Steel	**900-0532**

HEAD GASKETS

4"	.043" Micropore	*each*	**93-1040-S**
		2 pack	**930-0087**
		10 pack	**93-1071**
3⅝"	.045" Micropore	*each*	**93-1037-S**
		2 pack	**930-0091**
		10 pack	**93-1052**
	.0625" Micropore	*each*	**93-1016-S**
		2 pack	**930-0097**
		10 pack	**93-1053**
3½"	.045" Micropore *16770-84D, 16770-84F*	*each*	**93-1011-S**
		2 pack	**930-0098**
		10 pack	**93-1024**
	.0625" Micropore *16770-84D, 16770-84F, 10773-85*	*each*	**93-1313-S**
		10 pack	**93-1051**
	.030" Layered Steel	*each*	**900-0530**

BASE GASKETS AND O-RINGS

4"	.018" Micropore	*each*	**93-1031-S**
		2 pack	**930-0094**
		10 pack	**93-1067**
3⅝"	.018" Micropore	*each*	**93-1039-S**
3½"	.018" Micropore *16777-83A, 16774-86D*	*each*	**93-1038-S**

EXHAUST GASKETS

1986- 2003 Sportster Models *65324-83B, 65324-83A*	*each*	**106-5029**
	10 pack	**93-1072**

VALVE GUIDE SEALS

1986–2003 Sportster Models	*each*	**900-0338**

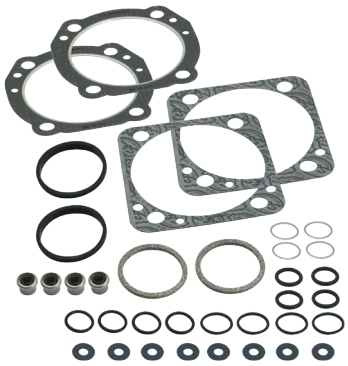

90-9503



93-1011-S



93-1039-S

ROCKER BOX GASKET KITS AND INDIVIDUAL GASKETS

S&S Billet

Gasket Kit		**90-4049**
O-ring, (-223), 1.625" ID x 1.875" OD, Viton®	*each*	**50-8044**
Seal, Umbrella Valve Cover *26856-89, 26856-89A* USA		**90-4030**
Gasket, Rocker Cover, S&S® Billet, O-ring, 1986-2003 xl		**90-4048**
Gasket, Bottom, Rocker Cover, 1986-2003 xl	*each*	**900-0538**
	2 pack	**900-0592**
Gasket, Kit, Rocker Box, 1986-'90 xl *17026-91A*		**900-0773**
Gasket, Kit, Rocker Box, 1991-2003 xl *17026-91A*		**900-0774**
Gasket, Kit, Rocker Box, 2004-'06 xl		**900-0775**
Gasket, Kit, Rocker Box, 2007-up xl		**900-0776**

LOWER END GASKETS AND SEALS

Gearcover gasket	*each*	**31-2052**
Camshaft Oil Seals, 1971 - up *11124*		**31-4051**

All reference to HD® part numbers is for identification purposes only. We in no way are implying that any of S&S® Cycle's products are original equipment parts or that they are equivalent to the corresponding H-D part number shown.

TAPPET GUIDE O-RINGS

1" I.D. x 13⁄16" O.D. x 3⁄32" CS *(upper)* *11167*	each	50-8004
1" I.D. x 1 1⁄8" O.D. x 1⁄16" CS *(lower)* *11168A*	each	50-8005
3⁄8" I.D. x 1⁄2" O.D. x 1⁄16" CS *(oil hole)* *11110*	each	50-8006
	10 pack	50-8077

PUSHROD O-RINGS

O-ring, Kit, Pushrod Cover, 1986–2003 xl		93-4022
Top O-ring *11293, 11157, 11101, 11190*	each	50-8039
Middle O-ring *11132A*	each	50-8038
Bottom O-ring *11145A*	each	50-8037

SPROCKET SHAFT SEAL

1991–'03 *35151-74A*	31-4060
1991–'03 S&S SA cases, BT style *12026B*	31-4010

FUEL SYSTEM GASKETS

Manifold Seals

S&S Manifold O-ring	each	16-0235
	10 pack	16-0243
Stock Manifold O-ring USA *26995-86B, 26995-86A, 26992-99*	each	16-0236
	10 pack	16-0244
Cap, rubber, manifold, fitting		50-8372

CLASSIC TEARDROP AIR CLEANER

Back Plate gasket	each	106-1724
	10 pack	106-2328
Vent seal washers silicone coated steel 1⁄2"	(each)	50-7054
	10 pack	50-7059

STEALTH AIR CLEANER

Back Plate gasket		
Stock CV Carb & EFI Throttle Body,1991–up xl *29062-95B*		106-6022
Super E/G.	each	106-1724
	10 pack	106-2328
For Muscle air cleaner *(includes lanyards)*		170-0137
Vent seal washers Nitrile Rubber Coated, 520" x .880" x .024" xl 1991–'06	each	50-7055
	10 pack	50-7057

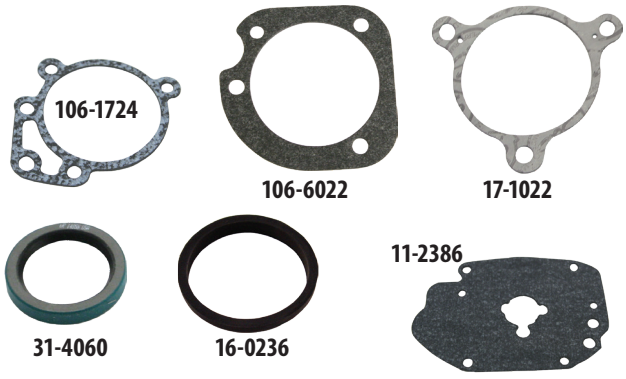

SINGLE BORE TUNED INDUCTION SYSTEM

Back Plate gasket

Gasket, Backplate - E/G/SBEFI	each	106-1724
	10 pack	106-2328
Gasket, S&S SBEFI 58mm		106-4662
Gasket, Stock carb/Throttle Body *29062-95B*		106-6022
Adaptor plate gasket		17-1022
Adaptor plate bracket o-ring	each	50-0446

CARBURETOR GASKETS

Bowl Gasket, Super E & G			11-2386
Pump cap o-ring - *(two required)*		each	50-8012
		10 Pack	50-8100
Idle Mixture Needle o-ring		each	500-0036
		10 pack	500-0148
Bellows Seal, Accelerator Pump			11-2266
Accelerator pump diaphram			11-2282
Manifold to carb orings various sizes	Super E	each	50-8016
		10 pack	50-8094
	Super G	each	50-8015
		10 pack	50-8093
Seat and bowl plug o-ring		each	50-8009
		10 pack	50-8095



All reference to HD® part numbers is for identification purposes only. We in no way are implying that any of S&S® Cycle's products are original equipment parts or that they are equivalent to the corresponding H-D part number shown.

SUPERSTREET 2:1 REPLACEMENT PARTS

1. Header **551-1138**
2. Heat Shield, Rear **551-1144**
3. Heat Shield, Front **551-1141**
4. Heat Shield, Collector **551-1139**
5. Muffler, 2007–'13 ..... **551-1148**
Muffler, 2014–'20 ..... **551-1149A**
6. Bracket **551-1153**
7. Clamp, Hose, Worm Drive, SAE #40 ..... **551-0402**
8. Clamp, Hose, Worm Drive, SAE #24 ..... **500-0791**
9. Clamp, Hose, Worm Drive, SAE #20 ..... **551-0527**
10. Gasket, Exhaust, Tapered, Stainless Steel **106-5029**
11. Nut, HSFH, 5/16-24 UNF-2B x .283", Zinc, Steel, *2 Pack* ... **50-5025-2**
12. Clamp, Muffler, Band Style, 2.5" **551-0135**
13. Plate, Nut, 5/16-18 x 2", Clear, Zinc **551-0469**
14. Screw, Flanged, 5/16-18 x 5/8", Zinc Plated **500-0984**
15. Washer, Flat, .375" x .813" x .063", Zinc, Steel **50-7051**
16. Screw, SHCS, 3/8-16 x 1-1/4", Zinc, Steel **50-0162**
17. Adapter, Oxygen Sensor, 12mm to 18mm, Stainless Steel **550-0375**

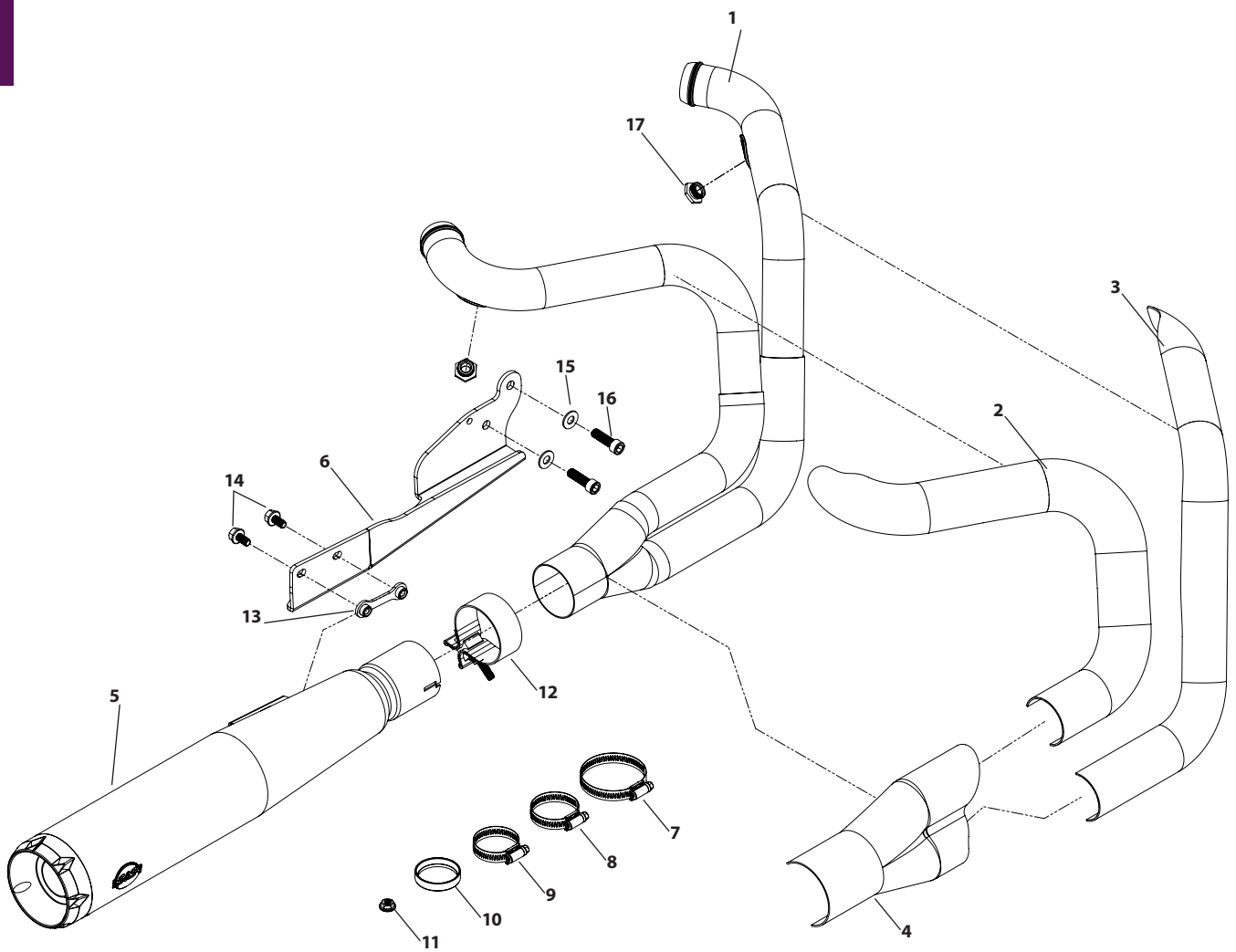

FLYWHEEL REPLACEMENT PARTS

1. Sprocket Shaft *(includes #2 & 3)*
   1986-1990 xl w/ S&S D/SB/SBD/SC/SCD/SCDR/SCR flywheels. **33-2302**
   1991-2003 xl w/ S&S D flywheels & 1994-1999 Buell **33-2303**
2. Key *(each)* **50-8224**
3. Nut **33-2331**
4. Pinion Shaft 1986-2003 xl *(includes #2, 3, 5)*
   w/S&S D/DR flywheels / 1994-1999 Buell **33-2325**
   w/S&S D/DR/DF flywheels - Special Application, +.500" **33-2329**
5. Meter Plug-
   .0625" hole . . . . . **50-8316±**
   no hole - Special application . . . . . **50-8314±**
6. Front Rod Race *24352-52A* **34-4505**
7. Rear Rod Race *24341-52A* **34-4506**
8. Wrist Pin Bushing
   .767" x .895" x .950" *24331-36*
   (for use with Heavy Duty Rods) **34-4507**
   .767" x .895" x 1.077" *24334-36*
   (for use with Supreme Rods) **34-4007**
9. Race and Bushing Set *(includes #6, 7, 8)*
   (for use with Heavy Duty Rods) **34-4540**
10. Alloy Bearing Cage Set **34-4520**
11. Bearing Set
    Standard *24354-87A* **34-4521**
12. Crankpin *(includes #13 & 14)* Late 1981-1999 Sportster
    Standard *23960-80A* **34-2602**
    .001" OS *23948-87* **34-2603**
    .002" OS *23949-87* **34-2605**
13. Crankpin Key late 1981-1999 Sportster / 1994-1999 Buell *11218*
    each **50-8222-S**
    5 pack **50-1009**
14. Crankpin Nut **34-2504**
15. Connecting Rod Assembly- 1986-1999 Sportster / 1994-1999 Buell *(includes #9, 10, 11, 12, 13, 14)*
    Heavy Duty/6.926" rod length- for stock stroke engines *24275-86A* **34-7800**

ANY JOB IS EASY WITH THE RIGHT TOOLS
COMPLETE S&S FLYWHEEL REBALANCING KIT PAGE 322

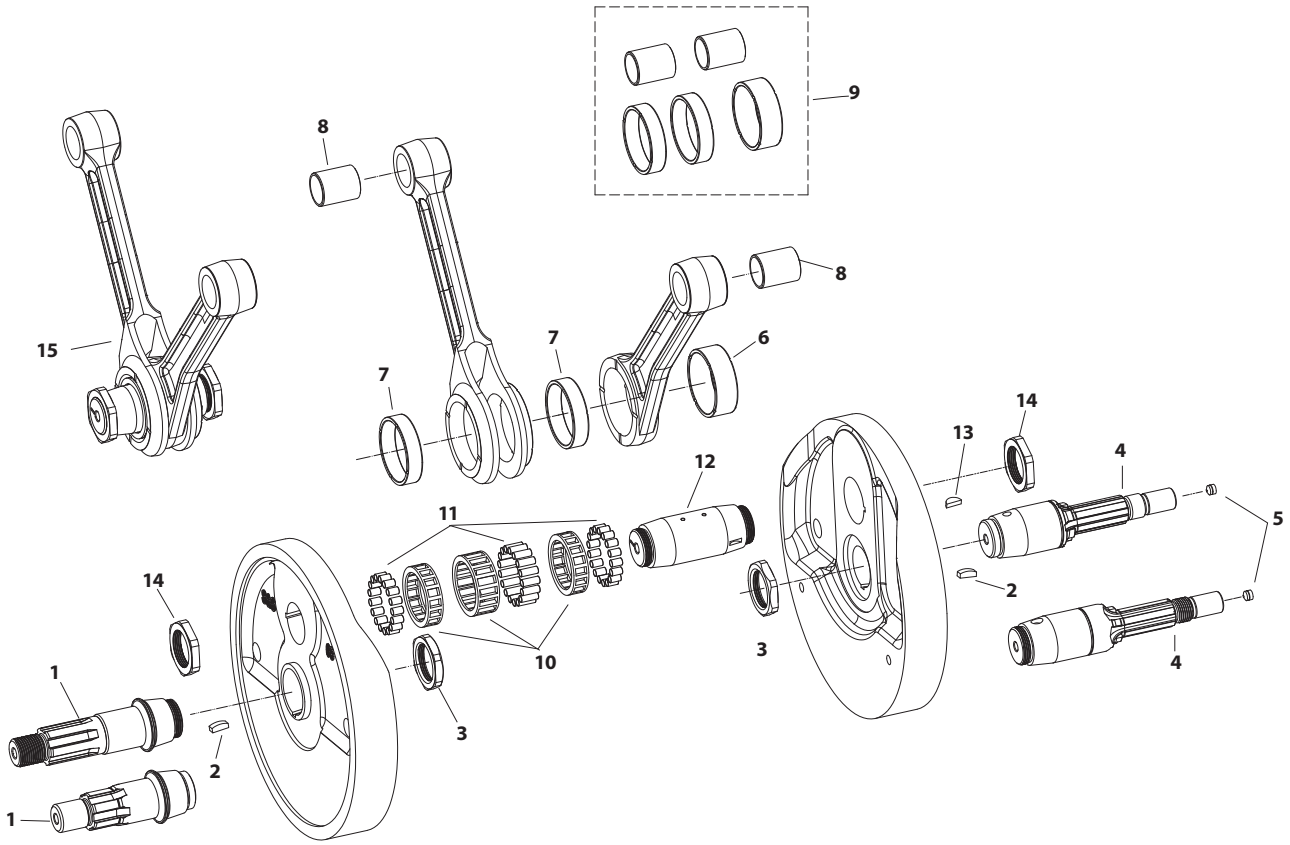

± WARNING: Cancer and Reproductive Harm – www.P65Warnings.ca.gov

NOTES

S&S® connecting rods, with their beefier than stock construction, are slightly heavier than stock connecting rods. Therefore, rebalancing the flywheels is recommended when S&S connecting rods are used in stock replacement applications. We realize that rebalancing is an inconvenience, but we did not want to sacrifice rod strength for convenience's sake. In addition, given the variations in stock and aftermarket components available to engine builders, flywheel rebalancing is a desirable step in any major engine overhaul. In some cases, stock flywheels will need to be relieved to clear the rods.

All S&S mainshafts for Harley-Davidson® Sportster® models are designed for use in flywheels with tapered mainshaft holes. 1986–later stock flywheels have mainshafts which are manufactured as an integral part of the flywheel.

S&S pinion shafts for 1986-'03 Sportster models are the splined 1986–'87 style. Pinion and oil pump drive gears in 1988–'03 models must be replaced with early style gears.

CRANKCASE REPLACEMENT PARTS
FOR SB100, 1986–'03 SPORTSTER® & 1994–'02 BUELL® MODELS

1. Crankcase assembly, half ..... **N/A**
2. Race, right main bearing - Standard 1991-'03 ..... **31-4050**
3. Pinion shaft assembly - Standard
1986-'03 xl/1994-'02 Buell **33-2325**
1986-up S&S SA only **33-2329**
4. Right main bearing assembly 1986-'03
Blue *24647-87* **31-4055**
Red *24650-87* **31-4056**
White *24659-87* **31-4057**
Green *24660-87* **31-4058**
5. Ring, main bearing retainer 1986-'03 *11177A* **50-8057**
5 pack **50-1004**
6. Cam needle bearing assembly – 1986-'03 *9057* **31-4061**
7. Left Timken® main bearing assembly, 1991-'03 *24729-74, 48302-85)* **31-4059**
8. Spacer, Left Main Bearing – 1974-'03 xl Fits stock diameter shaft.
.098" **31-4062**
.1015" - .1025" *9143* **31-4064**
.1035" - .1045" **31-4065**
.1055" - .1065" *9145* **31-4066**
.1075" - .1085" *9146* **31-4067**
.110" *9147* **31-4068**
.114" **31-4070**
9. Seal spacer, 1991-'03 xl **31-4034**
10. Seal, sprocket shaft oil, 1991-'03 xl *35151-74A* **31-4060**
11. Tappet guide assembly (See page 264)
12. Screw, SHC - 5/16"-18 x 1" *3201WA, 2708* **50-0101**
13. O-ring
13a. 1" I.D. x 13/16" O.D. x 3/32" CS (upper) *11167* **50-8004**
13b. 1" I.D. x 1 1/8" O.D. x 1/16" CS (lower) *11168A* **50-8005**
13c. 3/8" I.D. x 1/2" O.D. x 1/16" CS (oil hole) *11110* **50-8006**
10 pack **50-8077**
14. Cylinder stud 1991-'03 style *16832-86C* **31-2331-S**
8 pack **31-2331**
15. Bolt, case HH – See "Bolt Position Diagram"
(Position A)
S&S xl 1/4"-28 x 5 1/2" *(each)* **50-0090**
S&S SA xl 1/4"-28 x 6" *(each)* **50-0020**
(Position E, F, G, H)
S&S xl HHC 5/16"-18 x 4" **50-0102**
(Position J, K)
S&S xl 1/4"-20 x 3/4" **50-0022**
(Position L, M)
S&S xl 3/8"-24 x 5 1/2" *(5 pack)* **50-0170**
(Position N)
5/16"-18 x 3 1/2" *3427* **50-0117**
16. Washer, flat – See "Bolt Position Diagram".
(Position A, J, K)
1/4" x .474" x .050" *(each)* **50-7020**
(Position B, C, D, N) & Tappet guide
5/16" x .548" x 1/16" *(each)* **50-7025**
(Position E, F, G, H)
5/16" x 11/16" x 1/8" **50-7033**
(Position L, M)
3/8" x 7/8" x .146" *(each)* **50-7053**
17. Screw, SHC - 5/16"-18 x 3"
See "Bolt Location Diagram"
(Positions B, C, D, H) **50-0021**
18. Screw, SHC – 10-24 x 3/8" (Stator wires cover) *4091* **50-0023**
19. 10-24 x 1" (Stator) *2720* (each) **50-0044**
20. Cover, stator wires *29950-91* **31-2050**
21. Dowel pin - .250" diameter x 1/2" *358, 366* **50-8022**
2 pack **50-8022-2**
5 pack **50-8105**
22. Plug, timing hole - 1991-'03 *720* **31-2005**
23. Stud - 1/4"-20, 1/4"-28 x 1 1/4" 1991-up (shifter shaft) **50-8080**
24. Spring pin - 1991-'03 (Shifter spring) ..... **N/A**
25. Dowel pin - 1991-'03 (transmission door)
1/8" diameter x 1/2 ..... **50-8020**
.390" I.D. x .558" O.D. x 1/2" *16574-99A, 16573-83, 16573-83A* **50-8023**
10 pack **50-8109**
26. Transmission access door assembly **56-3025**
(Includes 1 ea. transmission access door, 50-8007, 56-3030.)
27. Bearing, transmission countershaft (LH) 1991-'03 *8992A, 8998* **56-3026**
28. Ring, transmission countershaft bearing retainer, 1991-'03
35021-89 ..... **50-8053**
29. Bearing, transmission mainshaft (LH) 1991-'03
35030-89, 35030-89A **56-3027**
30. Ring, transmission mainshaft bearing retainer, 1991-'03
35038-84, 35038-89 ..... **50-8052**
31. O-ring - 32mm x 1.5mm CS, Shifter drum bushing **50-8007**
32. Bushing, shifter drum - unfinished – 1991-'03 *9187* **56-3030**
33. Screw, HHC 5/16"-18 x 1 1/4" *(10 pack)* **50-0110**
34. Lock nut, hex 1/4"-28 *(each)* **50-5010**
35. Washer, flat 1/4" x 5/8" x 1/16" *6194, 6245, 6703, 6736, 6228W, 6192 each* **50-7021**
36. Fitting, hose – 1/8" -27 pipe male transmission vent **50-8115**
37. Dowel pin - .309" I.D. x .430" O.D. x 1/2"
24754-75, 24754-75A **50-8018**
38. Screw, HHC - 1/4"-20 x 1/2", primary oil level *3728* **50-0014**
39. Washer, flat 1/4" x 5/8" x 1/32" copper, primary oil level *6114* **50-7018**
40. Plug, drain
3/8"-18 NPT *Manufactured before 5-1-2000* **31-2006**
1/2"-20 thread – *(Includes o-ring.) Manufactured after 5-1-2000* **50-8335**
41. Reed valve assembly ,1991-'03 (Optional) **31-2051**
42. Dowel pin - 5/16" dia. x 1/2" ..... **N/A**
43. Plug, SH pipe, 1/4-27 *(each)* **50-8331A**
10 pack **50-1015**
44. Fitting, 90° - 1/8"-27 pipe male x 5/16" flared tube **50-8119**
45. Bearing, transmission shifter drum (RH) 1991-'03 ..... **56-3032**
46. Bearing, transmission output shaft 1991-up *8996A* **56-1280**
47. Ring, transmission output shaft bearing retainer,
109" x 3.734" tru-arc *11161, 11599* **50-8051**
48. Seal,Transmission Output Shaft
2.255" x 3.388" x .250,1995-'03 xl *12067B* **56-3033**
49. Bearing, transmission countershaft (RH) 1991-'03 ..... **56-3031**
50. Nut, press-in, 3/8"-24 - All 1991-'03 ..... **31-2048**
51. Cover, transmission inspection window 1991-up S&S SA cases only **31-2055**
52. Stud - 5/16"-18, 5/16"-24 x 1.370" 1991-up S&S SA cases only **50-8081**
53. Washer, flat - 5/16" x 11/16" x 1/16" *6320, 70907-07, 6016, 6702* **50-7034**
54. Nut, hex - 5/16" -24 *7833, 7883* **50-5023**
55. Nut, hex - 1/4"-28 *7683* **50-5011**
56. Nut, hex - 3/8"-24 *7861* **50-5037**
57. Hydraulic tappet assembly (See page 263)
58. 3/8"-16 x 1/2" BHCS ..... **N/A**
59. 5/16" x 3/4" .35 Shim **50-7044**
60. 1/4"-20 x 2" SHCS *25794-36* **50-0013**
61. Gasket, gearcover, S&S (N/S) **31-2052**
62. 45° hose fitting - 1/8" pipe male/female (Oil pump) (N/S) **50-8112**
63. Oil Pump,Assembly,Stock,1991-up xl (N/S)
26488-98, 26204-91A **106-5368**
64. Washer,Cam,Thrust,Double,.043",1958-'90 xl, .043" ..... **N/A**
1985-'90 xl, .062" *25551-58* **33-5210**
65. Washer,Cam,Thrust, For S&S Cam Covers only, .062" **33-5211**
66. Bracket Kit, Oil Filter 1986-'90 xl ..... **106-3134±**
67. Fitting, Straight, 3/4-16 UNF 2A x 1" *26352-95A* **50-8197-S**
68. Bracket, Oil Filter ..... **N/A**
69. Gasket, Oil Filter Mount **106-4423**
70. Screw, SHC, 5/16-24 x 2-3/4" **50-0017**
71. Plug, Pipe, 3/4" x 1/8-27 x .188" **50-8331A**
10 pack **50-1015**
72. Fitting, Pipe, 90°, 1/8-27 x .375" **50-8110**
73. Fitting, Hose, Straight, 1/8-27 x .500" **50-8115**

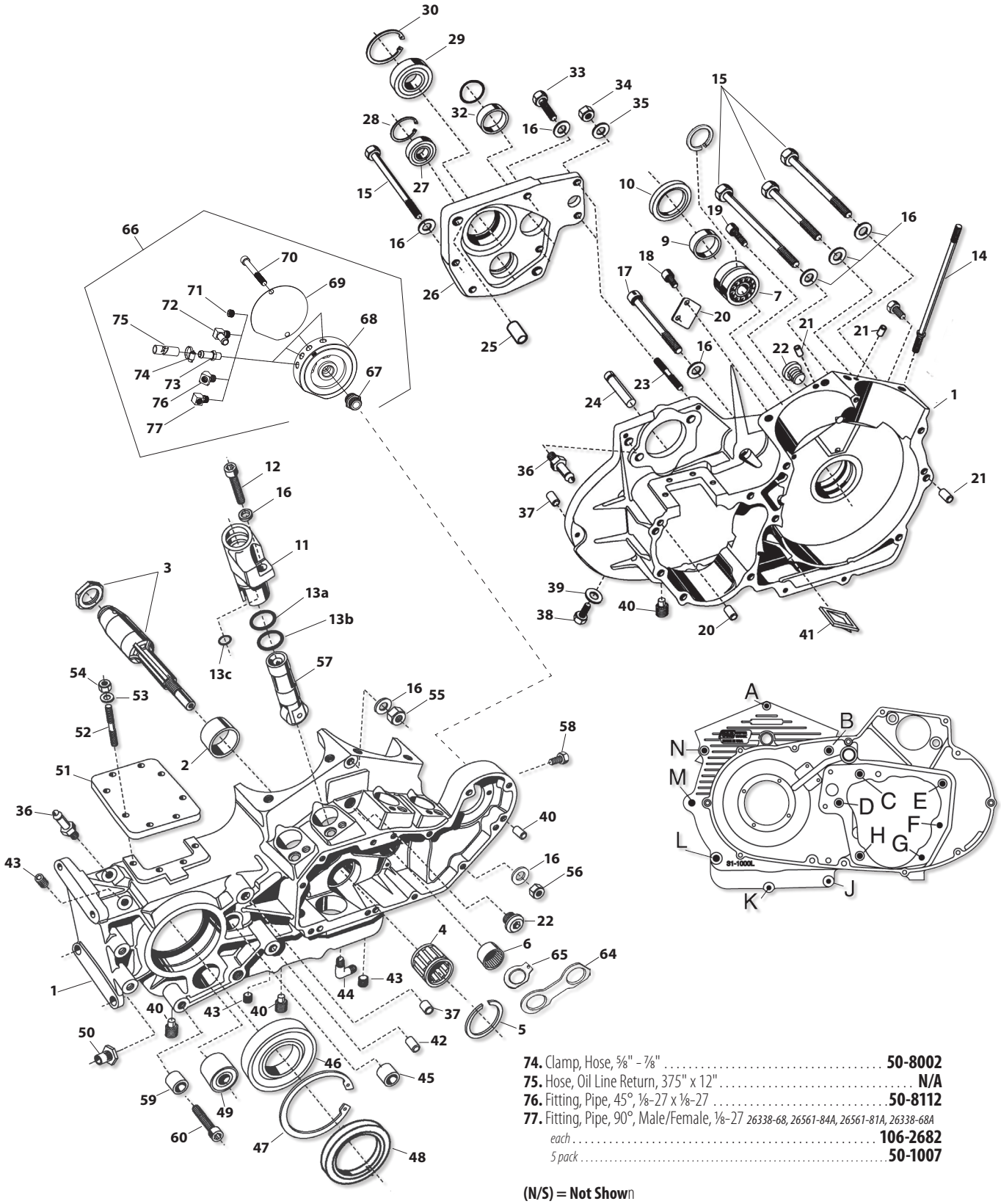

74. Clamp, Hose, ⅝" - ⅞" **50-8002**
75. Hose, Oil Line Return, 375" x 12" ..... **N/A**
76. Fitting, Pipe, 45°, ⅛-27 x ⅛-27 ..... **50-8112**
77. Fitting, Pipe, 90°, Male/Female, ⅛-27 *26338-68, 26561-84A, 26561-81A, 26338-68A*
each **106-2682**
5 pack **50-1007**

(N/S) = Not Shown

All reference to HD® part numbers is for identification purposes only. We in no way are implying that any of S&S Cycle's products are original equipment parts or that they are equivalent to the corresponding HD® part number shown.

±⚠WARNING: Cancer and Reproductive Harm – www.P65Warnings.ca.gov

SUPER STOCK® CYLINDER HEAD REPLACEMENT PARTS
SPORTSTER® MODELS 3-5/8" TO 4" BORE

1. Cylinder head (See cylinders on page 288)
2. Valves
Intake
2.000" diameter ..... USA **90-2000**
2.000" diameter + .085" stem length **90-2004**
Exhaust
1.605" diameter ..... USA **90-2001**
3. Valve seats
Intake - 2.000" diameter ..... USA 1,2,3 **90-2002**
Exhaust - 1.605" diameter ..... USA 1,2,3 **90-2003**
4a. Valve guide - Cast- Intake or Exhaust
Standard *Diameter .5625/.5620 18112-92* ..... USA 1,2,3 **90-2210**
+.001" *Diameter .5635/.5630 18130-83C* ..... USA **90-2211**
+.002" *Diameter .5645/.5640 18133-83A, 18133-83D* ..... USA **90-2212**
+.003" *Diameter .5655/.5650 18131-83C* ..... USA **90-2213**
+.030" *Diameter .5925/.5920* ..... USA **90-2219**
4b. Valve guide -Powder Metal - Intake or Exhaust
Standard **900-0553**
+.001" **900-0554**
+.002" **900-0555**
+.003" **900-0556**
5. Head mount bolt - ⅜"-16 x 1¼" *4716W*
each **50-0168**
6. Flat washer - ⅜" **50-7051**
7. Head bolt assembly – Includes head bolt washer
(See headbolts on page 273)
8. Head bolt washer
.150" *(each)* **50-0418-S**
.250" *(each)* **50-7091**
9. Exhaust port stud *16715-83 (each)* ..... USA **50-0493**
5 pack ..... USA **50-1028**
10. Lock washer - 5⁄16" **50-7032**
11. Nut, HH - 5⁄16" -24 *7833, 7883* **50-5023**
12. Exhaust pipe gasket *65324-83B, 65324-83A*
each **106-5029**
10 pack **93-1072**
13. Thread conversion insert ½"-13 to 5⁄16"-18 ..... **50-8151**
14. Intake manifold (See manifolds on page 280)
15. Screw, manifold mounting
SH - 5⁄16"-18 x 1" *3201WA, 2708* **50-0101**
HH - 5⁄16"-18 x 1" *3987* (each) ..... USA **50-0108**
16. Washer, flat - 5⁄16" *6320, 70907-07, 6016, 6702* **50-7034**
17. Flange, manifold mounting
Front *27009-86A* (each) ..... USA **16-0232**
5 pack ..... USA **16-0600**
Rear *27010-86A* (each) ..... USA **516-0233**
5 pack ..... USA **16-0601**
Set (Front & Rear) **106-3516**
18. O-ring, manifold *(each)* **16-0235**
10 pack **16-0243**

19. Head gasket
3½" Bore
.045" thick – (no o-rings required) *16770-84D, 16770-84F*
each **93-1011-S**
10 pack **93-1024**
.0625" thick – (No o-rings required *16770-84D, 16770-84F, 10773-85*
each **93-1313-S**
10 pack **93-1051**
3⅝" Bore
.045" thick – (no o-rings required) *(each)* **93-1037-S**
10 pack **93-1052**
.062" thick – (no o-rings required) *(each)* **93-1016-S**
10 pack **93-1053**
4" Bore
.045" thick *(each)* **93-1040-S**
10 pack **93-1071**
20. Alignment dowel *16574-99A, 16573-83, 16573-83A*
each **50-8023**
10 pack **50-8109**
Dowel pin - ¼" diameter x ½" - 4" bore *358, 366*
each **50-8022**
2 pack **50-8022-2**
5 pack **50-8105**
21. Plug, HH - 14mm *(each)* **90-4916**
2 pack **90-4916-2**
22. Washer, compression release- 14mm .507" x .705" x .047"
each **50-7094**

GASKET KITS

23. Rocker cover gasket kits, 1986-'03 xl
S&S Billet rocker cover, Rubber **(N/S)** **90-4049**
S&S Cast rocker cover, Rubber **(N/S)** **90-4091**
24. Pushrod cover o-ring kit **(N/S)**
1986-'90 xl **93-4022**
Includes 4 each:
Bottom *11145A (each)* **50-8037**
Middle *11132A (each)* **50-8038**
Top *11293, 11157, 11101, 11190 (each)* **50-8039**
25. Flat washer, bottom pushrod tube **(N/S)** **50-7150**
26. Top End Rebuild Kits for SB-Series Engines **(N/S)**
4" Bore **90-9503**
3⅝" Bore **90-9509**

(N/S) = Not Shown

NOTE
S&S heads for Harley-Davidson® Sportster® and Buell® models are similar but have different diameter front motor mount holes.

All reference to HD® part numbers is for identification purposes only. We in no way are implying that any of S&S Cycle's products are original equipment parts or that they are equivalent to the corresponding HD® part number shown.

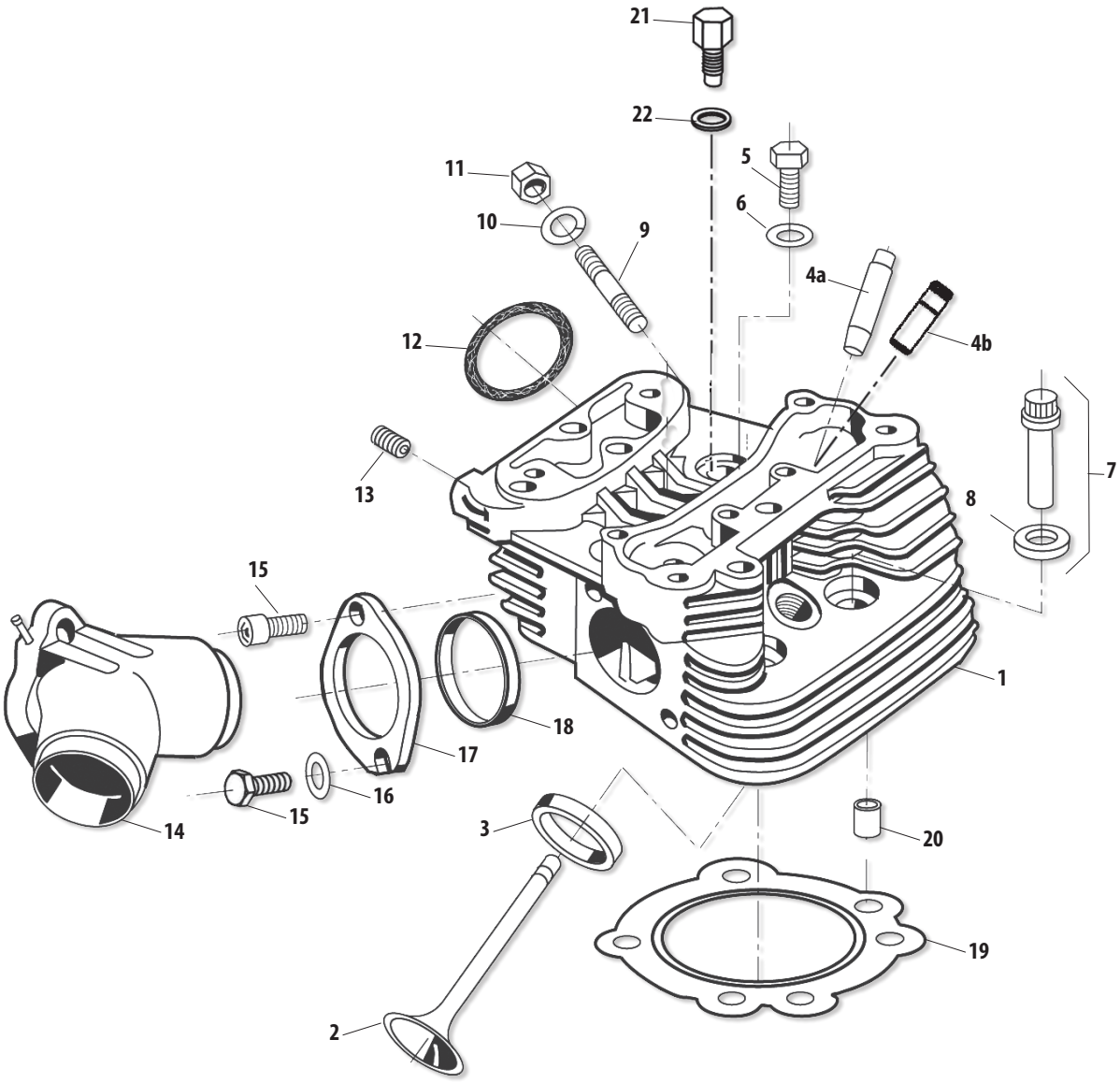
21
22
11
10
9
5
6
4a
4b
12
13
7
8
15
1
18
17
16
15
14
3
20
19
2

BILLET ROCKER COVER REPLACEMENT PARTS
FOR 1986–'03 HARLEY-DAVIDSON® SPORTSTER® & BUELL® MODELS

1. Screw, SH - ¼"-20 x ¾" *4069A (each)* **50-0067**
2. Washer, flat - ¼" *(each)* **50-7017**
12 pack **50-7013**
3. Washer, flat - ¼" rubber covered *(each)* **50-7015**
8 pack **50-7015-8**
12 pack **50-7015-12**
4. O-ring – 1⅜" I.D. x 1⅞" O.D. x ⅛" CS Viton ®
5. Rocker cover umbrella valve *26856-89, 26856-89A*
1990-up xl **90-4030**
6. Gasket, Bottom, Rocker Cover, 1986-2003
each **900-0538**
2 pack **900-0592**
7. Rocker cover base – billet
Chrome ..... **90-4051±**
Natural **90-4056**
8. Screw, SH w/washer – ¼"-20 x 1" *4741A*
(each) **50-0092-S**
4 pack **50-0092P**
9. Rocker cover o-ring gasket – S&S billet rocker cover
(Included in gasket set. See #16 below.)
10. Washer, flat – 5⁄16" *(each)* **50-7026**
11. Bolt, rocker support – socket head
11a. 5⁄16"-18 x 2¼" (left support) *(each)* **50-0115-S**
11b. 5⁄16"-18 x 2½" (right support) *876A (each)* **50-0118**
12. Rocker cover top – Billet Chrome ..... **90-4054±**
13. Right rocker shaft support – billet **90-4053**
14. Left rocker shaft support – billet **90-4052**
15. Rocker cover gasket set – S&S billet rocker cover
(Not shown) **90-4049**

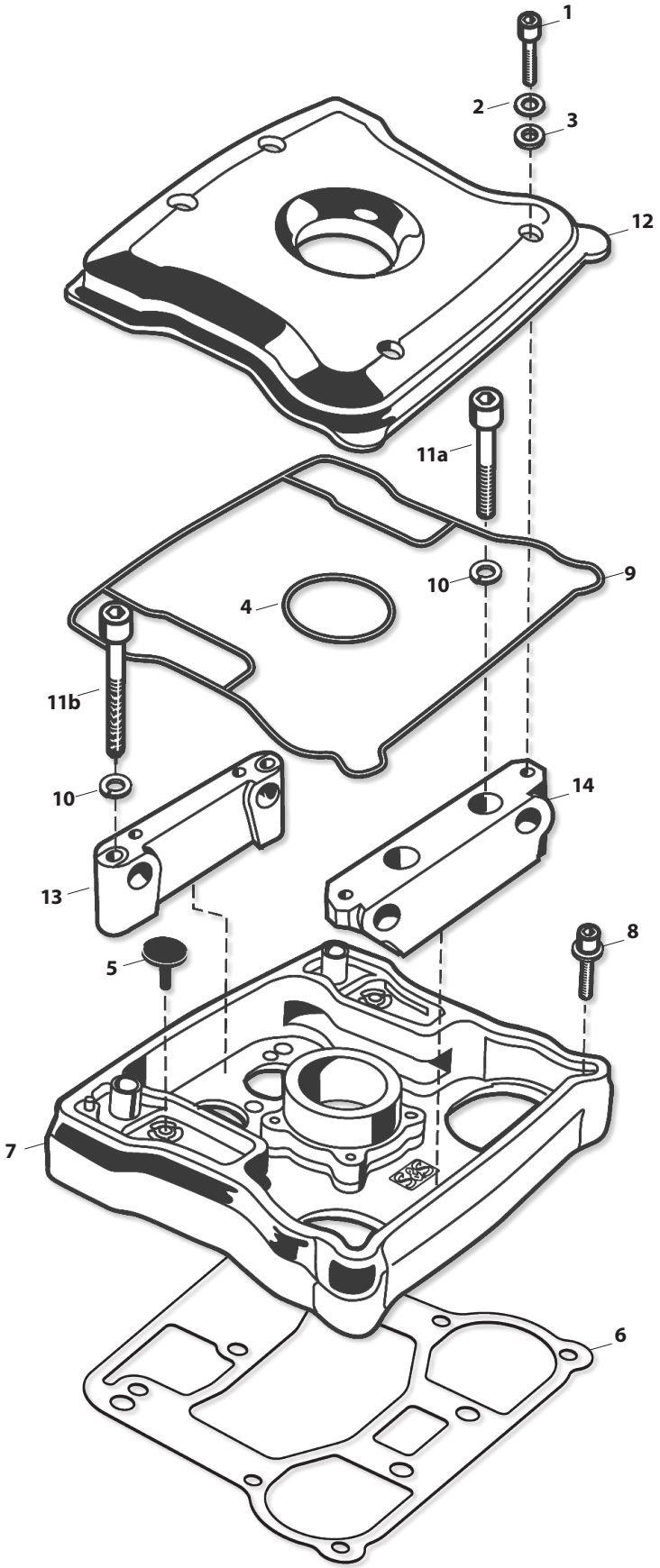

All reference to HD® part numbers is for identification purposes only. We in no way are implying that any of S&S Cycle's products are original equipment parts or that they are equivalent to the corresponding HD® part number shown.

± ⚠ WARNING: Cancer and Reproductive Harm – www.P65Warnings.ca.gov

STEALTH AIR CLEANER REPLACEMENT PARTS

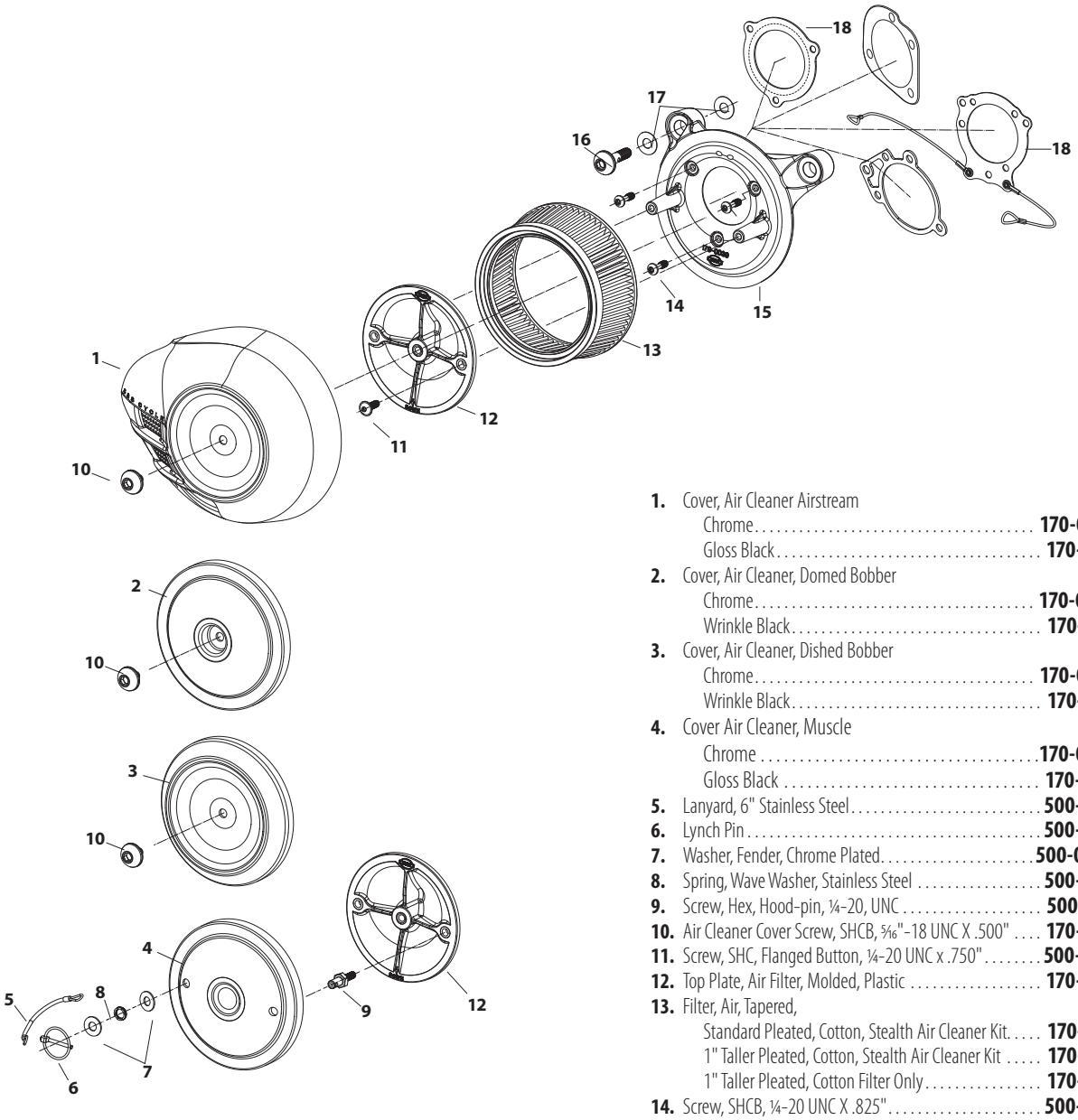

1. Cover, Air Cleaner Airstream
- Chrome ..... **170-0118±**
- Gloss Black **170-0396**

2. Cover, Air Cleaner, Domed Bobber
- Chrome ..... **170-0120±**
- Wrinkle Black **170-0124**

3. Cover, Air Cleaner, Dished Bobber
- Chrome ..... **170-0119±**
- Wrinkle Black **170-0123**

4. Cover Air Cleaner, Muscle
- Chrome ..... **170-0172±**
- Gloss Black **170-0462**

5. Lanyard, 6" Stainless Steel **500-0095**

6. Lynch Pin **500-0083**

7. Washer, Fender, Chrome Plated ..... **500-0094±**

8. Spring, Wave Washer, Stainless Steel **500-0093**

9. Screw, Hex, Hood-pin, ¼-20, UNC **500-0113**

10. Air Cleaner Cover Screw, SHCB, 5⁄16"-18 UNC X .500" **170-0508**

11. Screw, SHC, Flanged Button, ¼-20 UNC x .750" **500-0060**

12. Top Plate, Air Filter, Molded, Plastic **170-0026**

13. Filter, Air, Tapered,
- Standard Pleated, Cotton, Stealth Air Cleaner Kit. **170-0126**
- 1" Taller Pleated, Cotton, Stealth Air Cleaner Kit **170-0127**
- 1" Taller Pleated, Cotton Filter Only **170-0154**

14. Screw, SHCB, ¼-20 UNC X .825" **500-0059**

15. Backplate
- Stock CV & EFI, Black, Die Cast, 1991-2016 xl **170-0048**
- Super E/G, Black, Die Cast, 1991-2003 xl. **170-0050**

16. Screw, Backplate Vent, SHCB, ½-16 x 1½", Polished Stainless **170-0044**

17. Washer,Flat, ,Nitrile Rubber Coated, .380" x .880" x .024"
- *each* **50-7054**
- *10 pack* **50-7059**

18. Gasket,Backplate
- Stock CV Carb & EFI Throttle Body, 1991-2016 xl *(except Throttle by Wire)* **106-6022**
- Super E/G. **106-1724**
- w/ lanyards for use with Muscle Cover. **170-0137**

All reference to HD® part numbers is for identification purposes only. We in no way are implying that any of S&S Cycle's products are original equipment parts or that they are equivalent to the corresponding HD® part number shown.

± WARNING: Cancer and Reproductive Harm – www.P65Warnings.ca.gov

CLASSIC TEARDROP AIR CLEANER REPLACEMENT PARTS
FOR BUELL® MOTORCYCLES WITH STOCK OR S&S CARB

1. Air cleaner cover
Chrome ..... **17-0078**±
2. Air cleaner element **17-0079**
3. Air cleaner backing plate
Super E & G carburetors **17-0000**
4. Cover screw
Chrome *1305 (each)* ..... **50-0072**±
3 pack ..... **50-1052**±
10 pack ..... **50-0094**±
Black *902 (each)* **50-0310-S**
3 pack **50-0310**
5. Air cleaner backplate screw
For S&S Super E&G
Zinc Plated *(each)* **106-2084**
10 pack **106-2105**
6. Cap screw, breather & air cleaner mount **17-0338**
7. Shim, .620" I.D. x .800" O.D. x .185" *(each)* ..... **N/A**
8. O-ring ½" O.D. x ⅝" I.D. x 1⁄16" CS *(each)* **50-8270**
5 pack **50-8130**
9. O-ring ⅜" O.D. x ½" I.D. x 1⁄16" CS *11110 (each)* **50-8006**
10 pack **50-8077**
10. Breather fitting *(each)* **17-0350**
2 pack **17-0355**
11. Shim kit air cleaner backplate *(includes 4 each of .018", .030", .048")* . **17-0464**
Replacement Shims
½" x 1" x .018 *(each)* **50-7085**
½" x 1" x .030 (*each)* **50-7086**
½" x 1" x .048 *(each)* **50-7087**
½" x 1" x .105 *(each)* **50-7089**
½" x 1" x .125 *(each)* **50-7090**
12. Washer, friction, spring *(each)* **50-7035**
10 pack **50-7058**
13. Washer, flat .323" x ⅝" x 1⁄32" *(each)* **50-7037**
10 pack **50-7061**
14. Washer, flat, nylon .323" x ⅝" x .020" *(each)* **50-7036**
10 pack **50-7060**
15. Lever, fast idle, ... **17-0327**
16. Washer, flat w/step, brass *(each)* ..... **50-7007**±
10 pack ..... **50-7010**±
17. Screw, PH slotted 10-24 x ¼" *(each)* **50-0041**
10 pack **50-0062**
18. Screw, HH, cap, ¼"-28 x ⅞" **50-0074**
19. Washer, flat, .281" x .625" x .080" *6194, 6245, 6703, 6736, 6228W, 6192 each* **50-7021**
20. Locknut - ¼" -28 *(each)* **50-5010**
21. Hose, breather vent. **17-0365**
22. Fitting, hose, Buell air cleaner **17-0336C-S**
23. Hose, breather ..... USA 1,2 **17-0339**
24. Bracket, carb support, air cleaner ..... **N/A**
25. Tubing, rubber - ⅜" x ⅝" x 3' ..... USA **N/A**
26. Gasket,Backplate,1991-up xl/bt *29062-95B* **106-6022**

All reference to HD® part numbers is for identification purposes only. We in no way are implying that any of S&S Cycle's products are original equipment parts or that they are equivalent to the corresponding HD® part number shown.

± ⚠ WARNING: Cancer and Reproductive Harm – www.P65Warnings.ca.gov

Buell® Motorcycles with S&S E&G Carb
17-0402

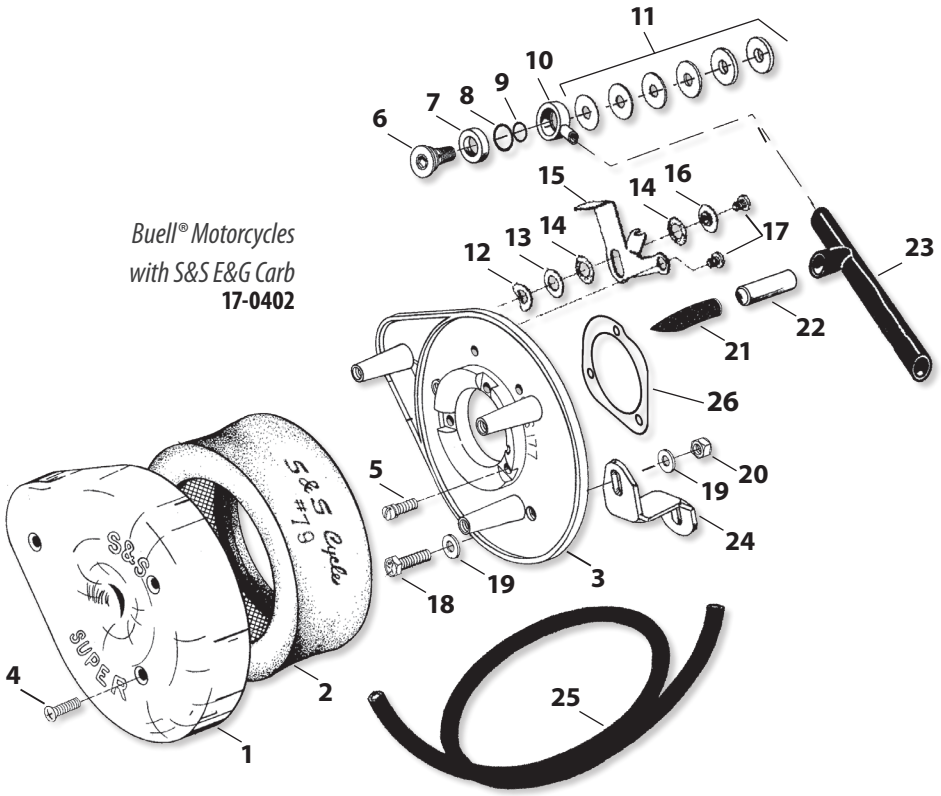

Buell® Motorcycles with CV Carb
17-0105

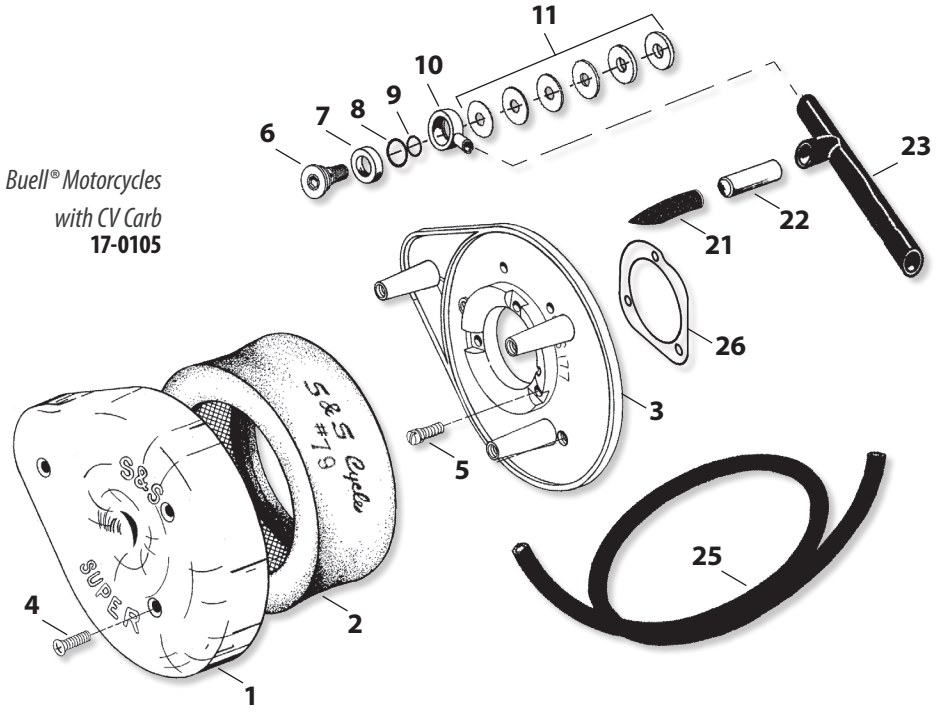

SINGLE BORE TUNED INDUCTION SYSTEM
REPLACEMENT PARTS

1. Tuned Intake Kit, 2.19" Single Bore
- Natural **106-4968**
- Gloss Black **170-0453**
- Chrome Plated ..... **106-4970±**

2. Tuned Intake Assembly, 2.19" Single Bore
- Gloss Black **170-0454**
- Chrome Plated ..... **106-4967±**

3. Air Filter, w/clamp, Stainless Cap – Conical – 2 7/16" I.D. x 4"
- Red *(each)* **17-1020**
- Blue *(each)* **17-1023**

4. Gasket, Intake – Adapter Plate **17-1022**

5. Plate, Adapter, 2.19" Single Bore Tuned Intake
- Chrome Steel ..... **17-1014±**

6. FHSC 1/4-20 x 5/8" *(each)* **50-0433**

7. FHSC 5/16-18 x 5/8" *(each)* **50-0432**

8. O-Ring, Adapter Plate Bracket
3 5/8" O.D. x 3 1/2" I.D. 1/16 CS, Viton *(each)* **50-0446**

9. Bracket Kit, 2.19" Single Bore Tuned Intake, Chrome
- Super E/G, 1986-'03 xl ..... **106-4975±**
- Stock CV & EFI, 1991-up xl ..... **106-6026±**

10. Backplate Screw
Screw, SHC, w/Threadlock, 1/4-20 x 1/2" **106-2084**
10 pack **106-2105**

11. Screw, 5/16-18 x 1 1/4, BHC, Chrome *(each)* ..... **50-0309-S±**

12. Flat Washer 5/16" x 1/16" *6320, 70907-07, 6016, 6702* **50-7034**

13. Hose, Breather, 1/4" I.D., 90° **19-0178A**

14. Screw, Breather Fitting, 3/8-16 x 1 1/4" **50-0436**

15. Washer, Flat, 3/8" x 13/16" x 1/16", Chrome ..... **50-7106-S±**

16. Screw, Breather Fitting, 1/2-13 x 1.25 ..... **50-0435**

17. Shim Kit
- (a) 5/16" I.D. 1986-'90 xl **17-0314**
- (b) 1/2" I.D. 1991-up xl **17-0464**

18. Enrichment Device, S&S Super E & G carbs ..... **11-2084±**
(Use in place of enrichment device on air cleaner backplate)

19. Gasket, Backplate - E/G/SBEFI *(each)* **106-1724**
10 pack **106-2328**

20. Gasket, Stock carb/Throttle Body *29062-95B* **106-6022**

21. Hardware Kit, 1986-'03 **(N/S)**
- Stock CV & EFI **500-0018**
- S&S Super E or G carb ..... **17-5099±**

22. Cap,Canister Purge Fitting **50-8266-S**

23. Hose,Vent,Breather,Cut To Size,.313" x .438" x 24" **(N/S)** **106-4982**

(N/S) = Not Shown

± ⚠ WARNING: Cancer and Reproductive Harm – www.P65Warnings.ca.gov

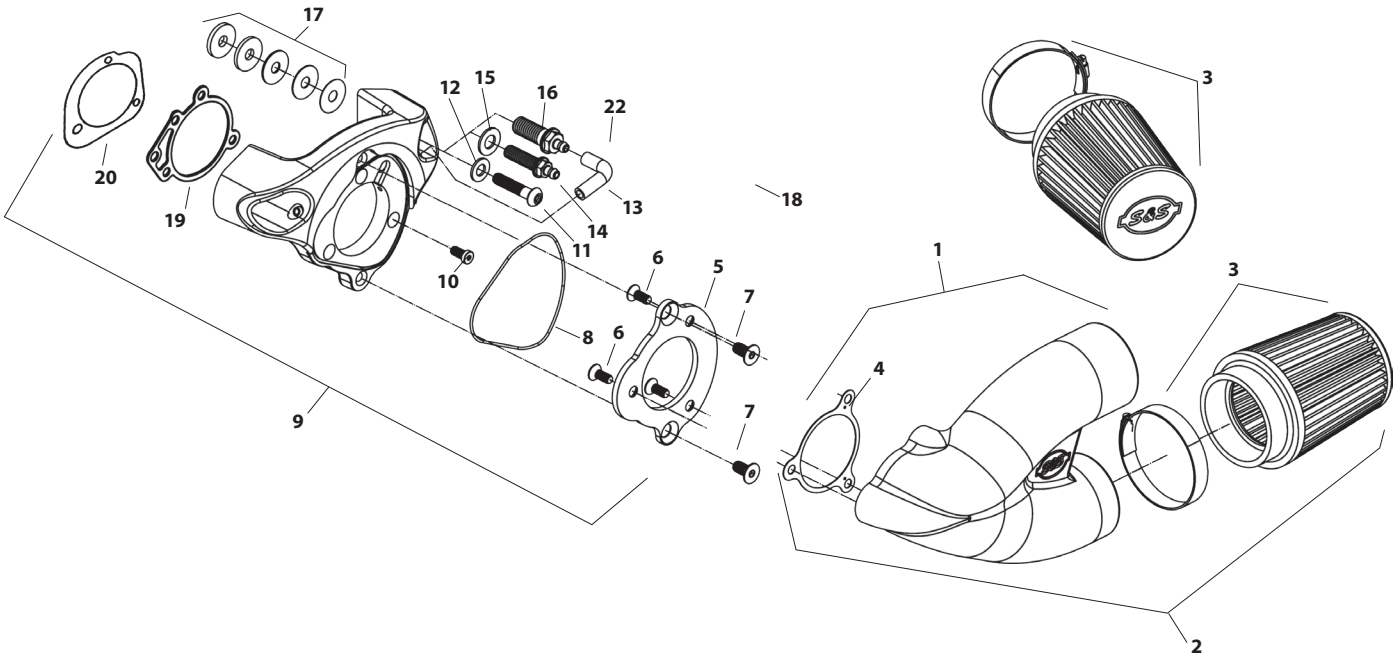

ACCESSORIES

Description		Part #
Air Filter Oil, 8 oz. Bottle	Red	**106-1163**
	Blue	**106-1164**
Nylon Air Filter Cover	*each*	**106-0247**
	2 pack	**106-0248**



106-0248 **17-1020** **17-1023** **106-1163** **106-1164**

All reference to HD® part numbers is for identification purposes only. We in no way are implying that any of S&S Cycle's products are original equipment parts or that they are equivalent to the corresponding HD® part number shown.

CLASSIC TEARDROP AIR CLEANER REPLACEMENT PARTS
FOR STOCK FUEL SYSTEMS

1. Air cleaner cover
- **1a.** Chrome ..... **17-0078±**
- **1b.** Chrome ..... **17-0378±**
- Black **170-0384A**
- Slasher ..... **17-0004±**

2. Element
- **2a.** Foam **17-0079**
- **2b.** Pleated **106-4722**

3. Backplate
- 1991-2007 xl **106-0950**

4. Cover screw
- Chrome *1305 (each)* ..... **50-0072±**
- *3 pack* ..... **50-1052±**
- *10 pack* ..... **50-0094±**
- Black *902 (each)* **50-0310-S**
- *3 pack* **50-0310**

5. Screw
- **5a.** 1999-03 xl, HHCS ¼"-28 x 1-¼" ..... **N/A**
- **5b.** All Others, HHCS ¼"-28 x ⅞" **50-0074**

6. Backplate screw, Zinc Plated *(each)* **106-2084**
- *10 pack* **106-2105**

7. Shim kit, xl 1966-'87 ..... **17-0314**
(Includes 2 each 5⁄16" x .018", 5⁄16" x .030", 5⁄16" x .048", 5⁄16" x .105" and 4 each 5⁄16" x .125")
Replacement shims
- a. 5⁄16" x .018" *(each)* **50-7038**
- b. 5⁄16" x .030" *(each)* **50-7039**
- c. 5⁄16" x .048" *(each)* **50-7040**
- d. 5⁄16" x .105" *(each)* **50-7041**
- e. 5⁄16" x .125" *(each)* **50-7042**
- *2 pack* **50-7042P**

8. Replacement Shims
- **8a.** 1991-up xl, & Buell® 1994-up
  - ½" x .018 *(each)* **50-7085**
  - ½" x .030" *(each)* **50-7086**
  - ½" x .048" *(each)* **50-7087**
  - ½" x .105" *(each)* **50-7089**
  - ½" x .125" *(each)* **50-7090**
- **8b.** 1999-03 xl
  - ⅝" x .025" *(each)* **50-7113**
  - *10 pack* **50-7110**
  - ⅝" x .050" *(each)* **50-7114**
  - *10 pack* **50-7111**
  - ⅝" x .075" *(each)* **50-7115**
  - *10 pack* **50-7112**

9. Breather Cap Screw **17-0338**

10. Shim, head vent - .62" I.D. x .80" O.D. x .175" *(each)* ..... **N/A**

11. Breather screw seal xl 1991-'03 Washer, .520 *(each)* **50-7055**
- *10 pack* **50-7057**

12. Breather fitting *(each)* **17-0350**
- *2 pack* **17-0355**

13. Crankcase breather vent hose
- **a.** xl 1986-'90 ..... **17-0113**
- **b.** xl 1991-'93 ..... USA 1,2 **17-0339**

14. Vent hose connector, xl 1986-'90 ..... **50-8111**

15. Vent hose, with angle cut **17-0365**

16. 90° Elbow fitting *(each)* **50-8110**

17. Hose fitting **17-0336C-S**

18. Flatwasher, ¼" *6194, 6245, 6703, 6736, 6228W, 6192 (each)* **50-7021**

19. Backplate plug, ⅛" -27 NPT *(each)* **50-8331A**
- *10 pack* **50-1015**

20. Plug, press-in clear plastic **50-8313**

21. Support bracket locknut - ¼"-28 x ⅞" *(each)* **50-5010**

22. Support bracket screw, 5⁄16"-18 x 1¼" **50-0110**

23. Lockwasher, 5⁄16" **50-7032**

24. Support Bracket
- **24a**. Air Cleaner to head 1986-90 xl **17-0311**
- **24b.** Air Cleaner to head 1991-03 xl ..... **N/A**

25. Rubber tubing - ¼" x ⅝" x 3' ..... USA **N/A**

26. Wire tie (N/S) **50-8003**

27. Washer, flat - ⅜" x ⅞" x .146" *(each)* **50-7053**

28. Shim - ¼" x ¾" x .200" **50-7024**

29. Screw Vent Fitting
- **29a.** xl 1993-99 ..... **17-0347**
- **29b.** xl 1999-up **17-0345**

30. Screw air cleaner backplate **17-0346**

31. Spring clamps **50-8001**

32. O-ring
- **32a.** (-014) .500"ID x .625" OD *(each)* **50-8270**
- *5 pack* **50-8130**
- **32b.** (-012) .375"ID x .500" OD *11110 (each)* **50-8006**
- *10 pack* **50-8077**

33. Gasket, backplate *(each)* **106-1724**
- *10 pack* **106-2328**

34. Adaptor assembly, 1991-up xl ..... **106-1982±**

35. Hose, vent, breather, formed, .250" x .375" x 1.330", 1991-2007 xl
- *each* **106-0161A**

36. Breather screw, 1991 xl **106-0845**

37. Washer, flat 5⁄16" x 1⅛" x ⅛" **50-7033**

38. Nut, lock, HH, 5⁄16"-18 ..... **50-5021**

39. Bracket, support, air cleaner to head, xl, 1991-up
- Front **17-0305**
- Rear **106-1285**

N/S = Not Shown

All reference to HD® part numbers is for identification purposes only. We in no way are implying that any of S&S Cycle's products are original equipment parts or that they are equivalent to the corresponding HD® part number shown.

± ⚠ WARNING: Cancer and Reproductive Harm – www.P65Warnings.ca.gov

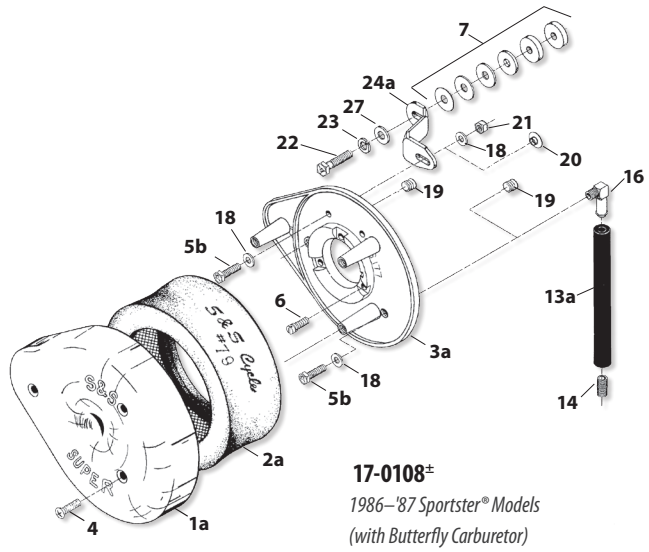

17-0108±
1986–'87 Sportster® Models
(with Butterfly Carburetor)

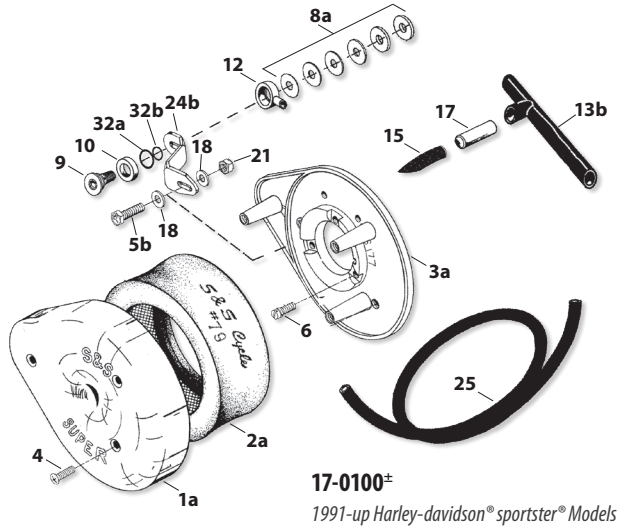

17-0100±
1991-up Harley-davidson® sportster® Models
(with CV carburetor) (Discontinued)

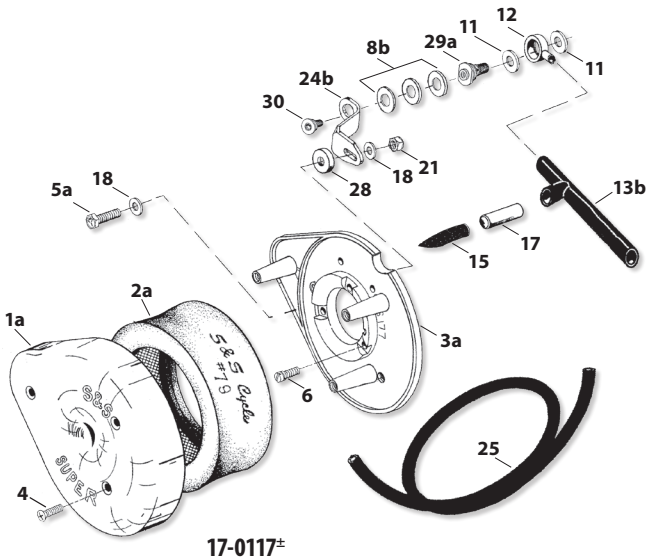

17-0117±
1991-'03 Harley-Davidson® Sportster® Models
(Discontinued)

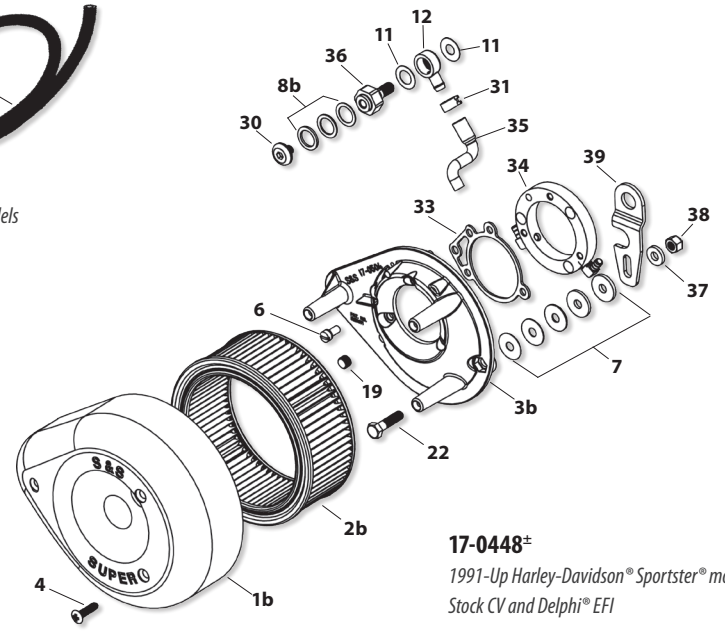

17-0448±
1991-Up Harley-Davidson® Sportster® models
Stock CV and Delphi® EFI

SUPER E AND G AIR CLEANERS REPLACEMENT PARTS
FOR 1986-UP HARLEY-DAVIDSON® SPORTSTER® MODELS

1. Air cleaner cover
- Chrome ..... **17-0378±**
- Black **170-0384A**
- Slasher ..... **17-0004±**

2. Element, pleated **106-4722**
- Element, pleated carbon **17-0375**

3. Backplate
- xl 1957-'85 ..... **17-0330**
- xl 1991-'03 ..... USA 1,2 **17-0336**
- xl 1986-'90 *Manufactured prior to 1-1-03* **17-0380**
- xl 2004-'06 ..... **17-0361**

4. Cover screw
- Chrome *1305 (each)* ..... **50-0072±**
  - *3 pack* ..... **50-1052±**
  - *10 pack* ..... **50-0094±**
- Black *902 (each)* **50-0310-S**
  - *3 pack* **50-0310**

5. Backplate screw, Zinc Plated *(each)* **106-2084**
- *10 pack* **106-2105**

6. Fast idle friction washer *(each)* **50-7037**
- *10 pack* **50-7061**

8. Fast idle nylon washer *(each)* **50-7036**
- *10 pack* **50-7060**

9. Fast idle lever ..... USA 1,2,3 **17-0329**

10. Fast idle brass washer *(each)* ..... **50-7007±**
- *10 pack* ..... **50-7010±**

11. Fast idle lever screw (one required) **50-0041**
- *10 pack* **50-0062**

12. Shim kit
- xl 1986-'90 ..... **17-0314**
  (Includes two each 5⁄16" x .018", .030", .048", .105", and four each .125")
- xl 1991-2016 ..... **17-0464**
  (Includes two each 1⁄2" x .018", .030", .048", .105", and four each .125")

13. Shims,
- **a.** xl 1986-'90
  - 5⁄16" x .018" *(each)* **50-7038**
  - 5⁄16" x .030" *(each)* **50-7039**
  - 5⁄16" x .048" *(each)* **50-7040**
  - 5⁄16" x .105" *(each)* **50-7041**
  - 5⁄16" x .125" *(Use on BT 1936-'84 and xl 1957-'85 when insulator block is installed.)*
    each **50-7042**
    2 pack **50-7042P**
- **b.** xl 1991-2016
  - 5⁄8" x .025" *(each)* **50-7113**
    10 pack **50-7110**
  - 5⁄8" x .050" *(each)* **50-7114**
    10 pack **50-7111**
  - 5⁄8" x .075" *(each)* **50-7115**
    10 pack **50-7112**
  - Shim, .515" x 1" x .125" *(each)* **50-7090**

14. Backplate mounting bolt – xl 1957-'85
- 5⁄16"-18 x 1" *3987 (each)* ..... USA **50-0108**
- 5⁄16"-24 x 3⁄4" *(Discontinued)* ..... **N/A**

15. Elbow fitting *(each)* **50-8110**

16. Breather screw
- Standard length **17-0338**

17. Breather screw o-ring – 5⁄8" O.D. *(each) 11140, 11273* **50-8270**
- *5 pack* **50-8130**

18. Breather screw o-ring – 1⁄2" O.D. *11110 each* **50-8006**
- *10 pack* **50-8077**

19. Breather screw washer **50-7119**

20. Breather fitting *(each)* **17-0350**
- *2 pack* **17-0355**

21. Crankcase breather hose
- a. xl 1978-'90 ..... **17-0113**
- b. xl 1991-'06 ..... USA 1,2 **17-0339**

22. Vent hose connector **50-8111**

23. Backplate plug 1⁄8"-27 *(each)* **50-8331A**
- *10 pack* **50-1015**

24. Locknut – 5⁄16"-18 *(Use with support bracket - see #26)* **50-5021**

25. Flatwasher – 5⁄16" x 1⁄16" *6320, 70907-07, 6016, 6702* **50-7034**

26. Support bracket
- xl 1957-'85 ..... **17-0393**
- xl 2004-2016 ..... **17-0305**

27. Mounting bracket bolt – xl 1957-'90 and 2004-'06 ..... **50-0110**

28. Lockwasher – 5⁄8" **50-7032**

29. Flatwasher – 5⁄16" x 1⁄8" **50-7033**

30. Wire tie (N/S) **50-8003**

31. Hose clamp (N/S) **50-8002**

32. Air cleaner assembly *(Includes: Chrome cover, backplate,filter element, and hardware kit)*
- xl 1957-'85 ..... **17-0400±**
- xl 1986-'90 ..... **17-0399±**
- xl 1991-'03 ..... **17-0404±**

33. Mounting hardware package (N/S) *Includes all parts needed to install air cleaners:*
- xl 1957-'85 ..... **17-0441±**
- xl 1986-'90 ..... **17-0458±**

34. Screw vent fitting
- a. BT 1993-'99 ..... **17-0347**
- b. BT 1999-up **17-0345**

35. Screw, air cleaner to head **17-0346**

36. Washer, silicone coated steel, xl 1991-'06, .520" *(each)* **50-7055**
- *10 pack* **50-7057**

37. Spring clamps (N/S) **50-8001**

38. Breather conversion kit, xl 1 7⁄8" carbs (N/S) **17-0487**

Convert early S&S air cleaners for 1991–'03 xl with o-ring breather fittings to new style breather hardware. xl kits include special insulator block, and manifold screws.

(N/S) = Not Shown

All reference to HD® part numbers is for identification purposes only. We in no way are implying that any of S&S Cycle's products are original equipment parts or that they are equivalent to the corresponding HD® part number shown.

± ⚠ WARNING: Cancer and Reproductive Harm – www.P65Warnings.ca.gov

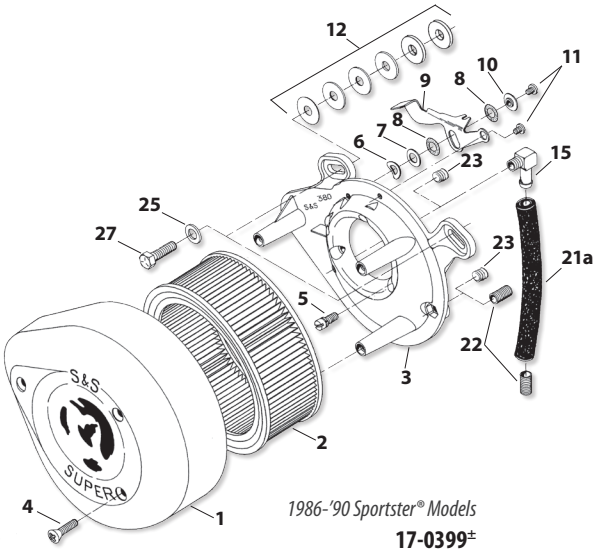

1986-'90 Sportster® Models
17-0399±

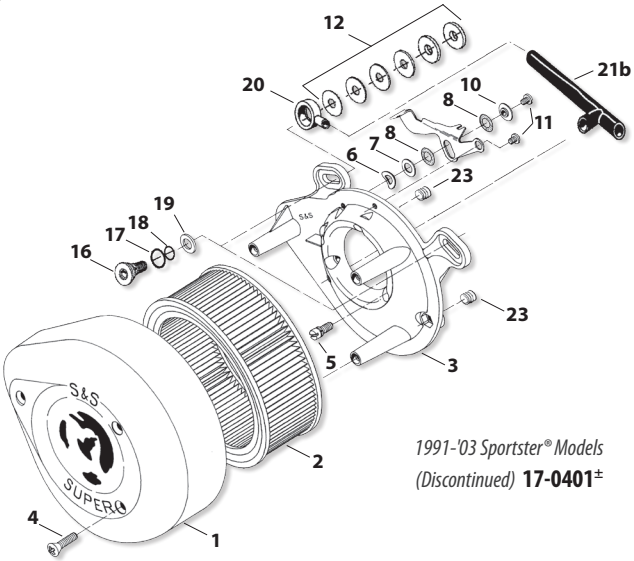

1991-'03 Sportster® Models
(Discontinued) **17-0401±**

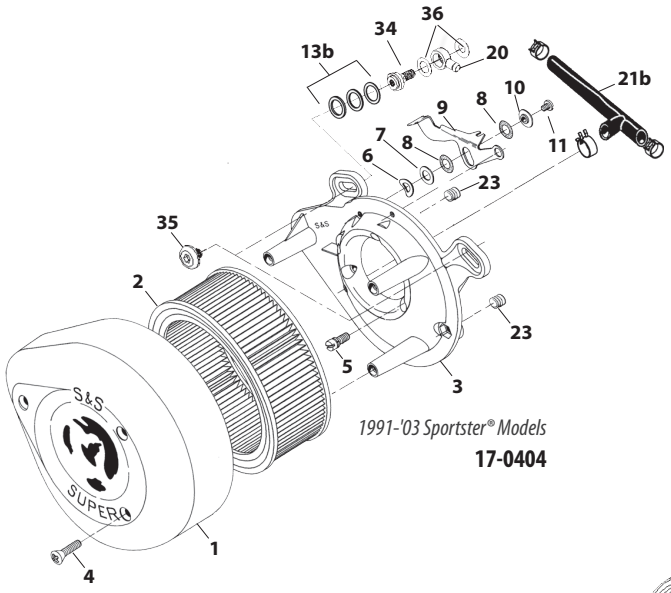

1991-'03 Sportster® Models
17-0404

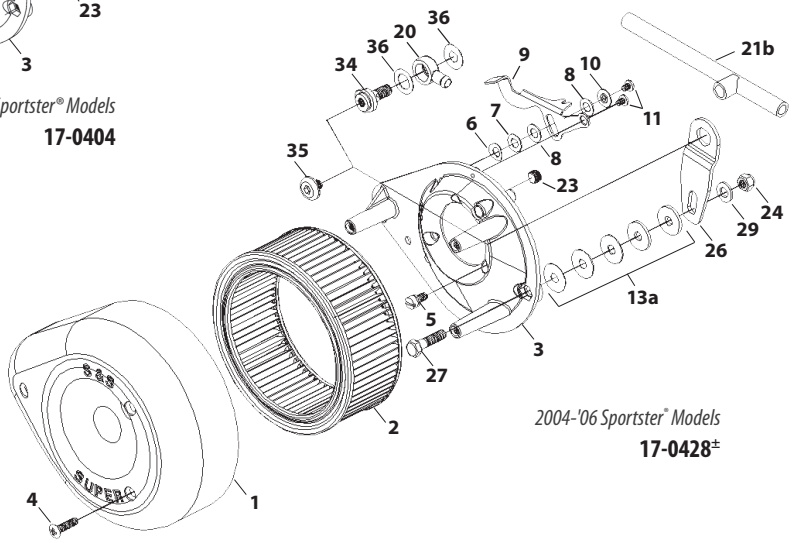

2004-'06 Sportster® Models
17-0428±

SUPER E & G CARBURETOR REPLACEMENT PARTS

1. Carb body assembly
1⅞" Super E ..... USA 11-2381±
2⅛" Super G ..... **11-2391±**
2. Throttle shaft
1⅞" Super E – Includes two plate screws **11-2383**
2⅛" Super G – Includes two plate screws **11-2483**
3. Throttle plate screw *11-2045-* (two required) (each) **50-0055-S**
10 pack **50-0064**
4. Throttle plate
1⅞" Super E **11-2055**
2⅛" Super G **11-2355**
5. Throttle return spring *(each)* **11-2382**
5 Pack ..... USA 1,2,3 **11-3502**
6. Throttle spool ..... USA 1,2,3 **11-2385**
7. Throttle shaft lock washer *(two required)* **50-7031**
8. Throttle shaft nut *(two required) (each)* **11-2350**
5 pack **11-2363**
9. Throttle shaft nylon washer *(each)* **50-7050**
10 pack **50-7072**
10. Pump actuator lever **11-2376**
11. Actuator spring *(each)* **11-2375-S**
5 pack ..... USA 1,2,3 **11-3501**
12. Pump actuator arm **11-2377**
13. Idle mixture screw
a. Idle mixture screw, brass *(each)* ..... **11-2354±**
5 pack ..... **11-2378±**
b. Idle mixture screw only
each **110-0003**
Idle mixture screw w/ 500-0036 o-ring)
each ..... **110-0068±**
5 pack ..... **110-0069±**
14. Idle mixture screw spring *(each)* **11-2052**
10 Pack ..... USA 1,2,3 **11-2060**
15. Idle speed screw *(each)* **50-0038**
10 Pack **50-0150**
16. Pump adjustment screw *(each)* **50-0039**
10 Pack **50-0146**
17. Idle speed/pump adjuster spring *(each)* **11-2048**
10 pack ..... USA 1,2,3 **11-2053**
18. Plunger nut *(each)* ..... **11-2344±**
5 Pack ..... **11-2372±**
19. Plunger spring *(each)* **11-2340**
10 Pack ..... USA 1,2,3 **11-2359**
20. Fast idle plunger **11-2343**
21. Cable guide assembly with screw
Use with butterfly style cables **11-2339P**
Use with constant velocity style cables **11-2338P**
22. Cable clamp/float pin screw *(each)* **50-0041**
10 Pack **50-0062**
23. O-ring
1⅞" Super E *(each)* **50-8016**
10 Pack **50-8094**
2⅛" Super G *(each)* **50-8015**
10 pack **50-8093**
24. Bellows seal *(each)* **11-2266**
5 Pack **11-2279**
25. Bowl vent plug *(each)* **50-0105**
10 pack **50-0151**
26. Main discharge tube ..... **11-2085±**
27. Main jet – See Chart on page 279
28. Intermediate Jets – See Chart on page 278
Series #94 fits all Super 1⅞", 2⅛", 2¼" gas carburetors.
29. Bowl gasket *(each)* **11-2386**
10 pack **11-2387**
30. Float **11-2187**
31. Float pin *(each)* **11-2369**
5 Pack ..... **11-2370±**
32. Bowl screw
10-24 x ¾" - *Three required (each)* **50-0034**
10 Pack **50-0063**
10-24 x 2⅜" - *One required (each)* **50-0040**
10 Pack **50-0061**
33. Carb bowl *(only)*
..... USA 1,2,3 **11-2388±**
Carb bowl complete assembly
..... USA 1,2,3 **11-2388P**
34. Bowl plug *(each)* **11-2090**
5 pack ..... **11-2092±**
35. Seat o-ring*
(required with part #11-2465 only when replaces 360°style fuel inlet.)
each **50-8009**
10 pack **50-8095**
36. Needle
1⅞" Super E & 2⅛" Super G
..... USA 1,2,3 **11-2195±**
Racing only ..... **11-2197±**
37. Seat - Includes O-ring #35
(Replaces obsolete seats 11-2347 and 11-2348)
a. 1⅞" E & 2⅛" G *(Uses part #11-2195± needle)* **11-2465**
b. Racing only *(Uses part #11-2197± needle)* ..... **N/A**
c. Racing only -threaded fuel inlet (6AN .157" ID)
(Uses part #11-2195± needle) **11-2395**
d. Permeation Compliant fuel inlet seat Super E or G,
(Uses part #11-2195± needle) ..... USA 1,2,3 **106-2011**
38. Ejector nozzle o-ring *(each)* **50-8011**
10 Pack **50-8096**
39. Pump pushrod *(each)* **11-2373**
5 Pack ..... USA 1,2,3 **11-2393**
40. Check ball - *(two required) (each)* **50-8090**
10 pack **50-8125**
41. Check ball spring *(each)* **11-2374**
5 Pack ..... USA 1,2,3 **11-2392**
42. Pump cap o-ring - *(two required) (each)* **50-8012**
10 Pack **50-8100**
43. Pump cap assembly ..... USA 1,2,3 **11-2389**
44. Overflow hose per 24" *27369-76*
(each) ..... USA **19-0262-S**
5 Pack ..... USA **19-0263**
45. Pump cap screw 8-32 - *(two required) (each)* **50-0042**
10 Pack **50-0098**
46. Diaphram spring *(each)* **11-2275**
10 pack ..... USA 1,2,3 **11-2278**
47. Diaphragm **11-2282**
48. Gasket, backplate *(each)* **106-1724**
10 pack **106-2328**
49. Enrichment device *(Use with air horn only)* ..... USA 3 **11-2084±**
50. Fuel line
a. Fuel line With 90° bend*19" *(Use with part #11-2465)*
USA USA 1,2,3 ..... **N/A**
b. Permeation Compliant straight, 311" x .563" x 17.5"
(Use with part #106-2011 , 90° seat) ..... USA **190-0001**
51. Fuel line insulator–12" ..... USA 1,2,3 **19-0172**
52. Spacer, Kit, w/ O-ring
1⅞" x 1" **16-0057***
2⅛" x 1" **16-0357***
2¼" x 1" **16-0157**
*Use with 1" Spacer Block **16-0058**
53. Insulator Block,Manifold,w/ O-ring
1⅞" x ¼"Super E **16-0491**

All reference to HD® part numbers is for identification purposes only. We in no way are implying that any of S&S Cycle's products are original equipment parts or that they are equivalent to the corresponding HD® part number shown.

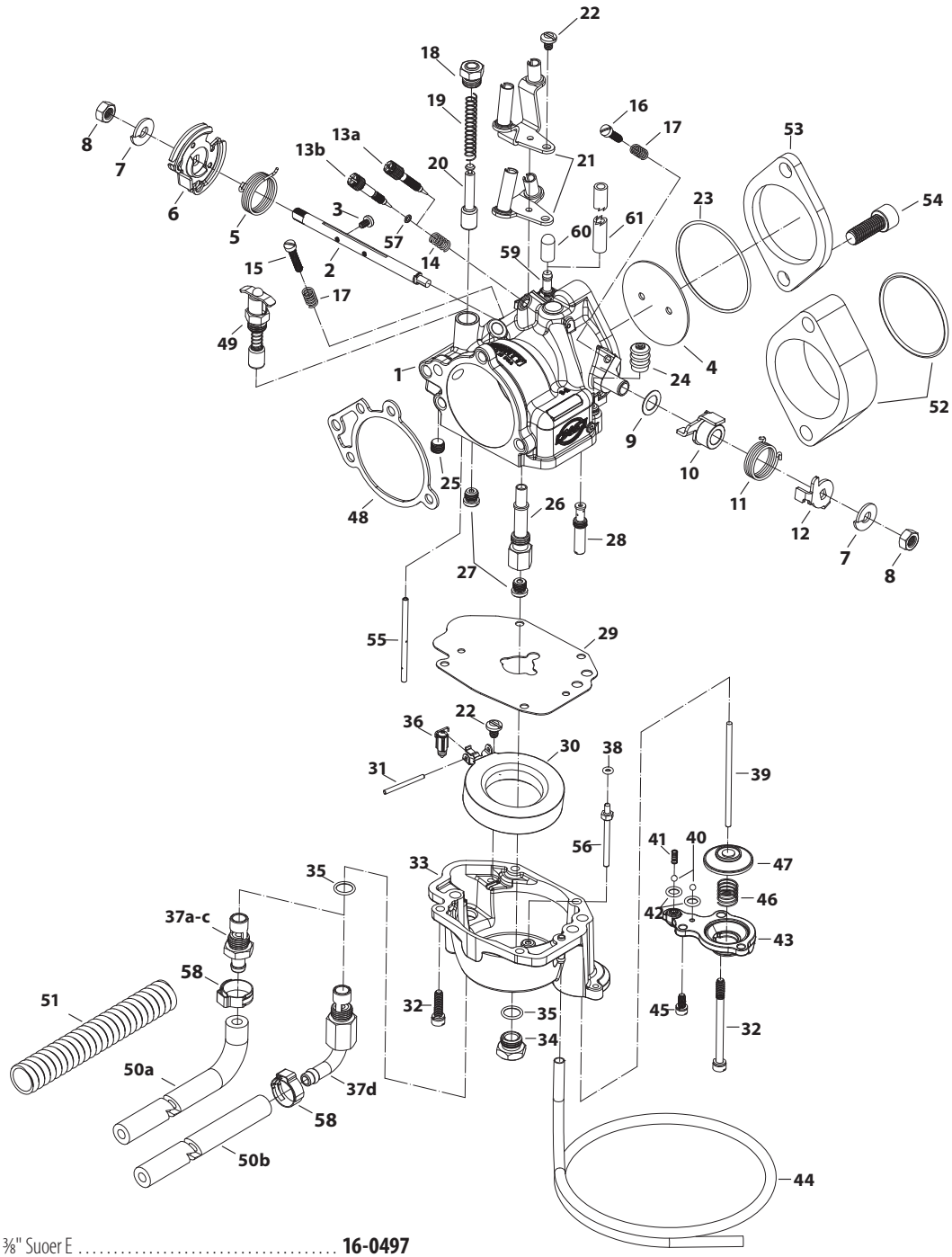

	1⅞" x ⅜" Suoer E	**16-0497**
	2⅛" x ¼" Super G	**16-0492**
	2⅛" x ⅜" Super G	**16-0498**
	2¼" x ¼" Super D	**16-0499**
54.	Screw	
	1" x ⅜"-16 *(each)*	**50-0161**
	1¼" x ⅜"-16 *(each)*	**50-0162**
	10 pack	**50-0177**
	1⅜" x ⅜"-16 *(each)*	**50-0163**
	5 pack	**50-0178**
	2" x ⅜"-16 *(each)*	**50-0164**
	5 pack	**50-0185**
	2004-'06 Top Carb to Manifold	
	1½" x ⅜"-16	**50-0354-S**
	2004-'06 Low Carb to Manifold	
	1½" x ⅜"-16	**50-0351-S**
55.	Tube,Fast Idle Pick-Up,Super E/G,.125" x 2.350",Brass	**0381F±**
56.	Tube,Ejector Nozzle,Super E/G,Flared,Brass.	**106-6124±**
57.	O-ring, 3mm x 5mm x 1mm *(each)*	**500-0036**
	10 pack	**500-0148**
58.	Clamp, ⅝" - ⅞"	**50-8002**
59.	Hose, Fitting straight, .040"	**16-0134**
60.	VOES Fitting Cap	**50-8372**
61.	VOES/Oil Return Hose.	**19-0395**

**360° banjo style fuel inlet fitting used on early S&S E&G carbs is no longer available. Replace with one of the inlet/seat fittings listed under #37 on this page. We highly recommend inlet/seat #106-2011.*

±⚠WARNING: Cancer and Reproductive Harm – www.P65Warnings.ca.gov

CARBURETOR REBUILD KITS
SEE PAGE 279

VALVE SPRING REPLACEMENT PARTS

.650" Lift Sidewinder® Valve Springs (Stock, Super Stock® & CNC Ported Cylinder Heads)

1. SPRING, VALVE .650" **106-5689**
2. Collar, Top, Steel **106-5690**
3. Collar, Bottom, Steel **106-5691**
4. Seal,Valve
   S&S CNC Ported Heads & Stock w/7mm valve stem **106-5688**
   S&S Super Stock Heads Stock w/5⁄16 valve stem
   .420" Cast *(each)* **900-0338**
   .562" Powder Metal *(4 pack)* **900-0737**
5. Keeper, valve spring
   S&S CNC Ported Heads & Stock w/7mm valve stem **106-5692**
   S&S Super Stock Heads & Stock w/5⁄16 valve stem **90-2094-S**
6. Valve Spring Shim
   .015" *(each)* **500-0013**
   .030" *(each)* **500-0014**

.650" Lift Sidewinder® Valve Springs

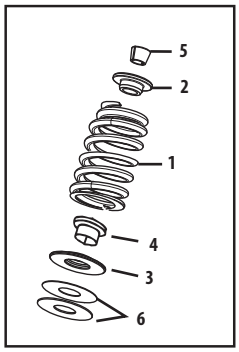

.585" Lift Valve Springs

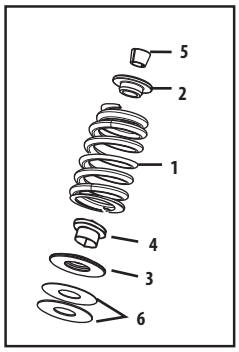

.585" Lift Valve Springs (Stock, Super Stock® & CNC Ported Cylinder Heads)

1. Spring, Valve .585" **900-0444**
2. Collar, Top **900-0550**
3. Collar, Bottom
   For Stock Heads w/7mm valve stem *(includes seal)* **900-0590**
   For CNC Ported Heads w/7mm valve stem **900-0549**
   For Super Stock Heads **900-0600**
4. Seal, valve guide
   For Stock Heads w/7mm valve stem *(includes bottom collar)* **900-0590**
   For CNC Ported Heads w/7mm valve stem **106-5688**
   For Super Stock Heads & Stock w/5⁄16 valve stem
   .420" Cast *(each)* **900-0338**
   .562" Powdermetal *(4 pack)* **900-0737**
5. Keeper, valve spring
   For Stock and CNC Ported Heads **106-5692**
   For Super Stock Heads & Stock w/5⁄16 valve stem **90-2094-S**
6. Valve spring shim
   For Stock and CNC Ported Heads
   .015" **500-0013**
   .030" **500-0014**
   For Super Stock Heads & Stock w/5⁄16 valve stem
   .015" **90-2086**
   .030" **90-2087**

STREET® & STREET ROD™

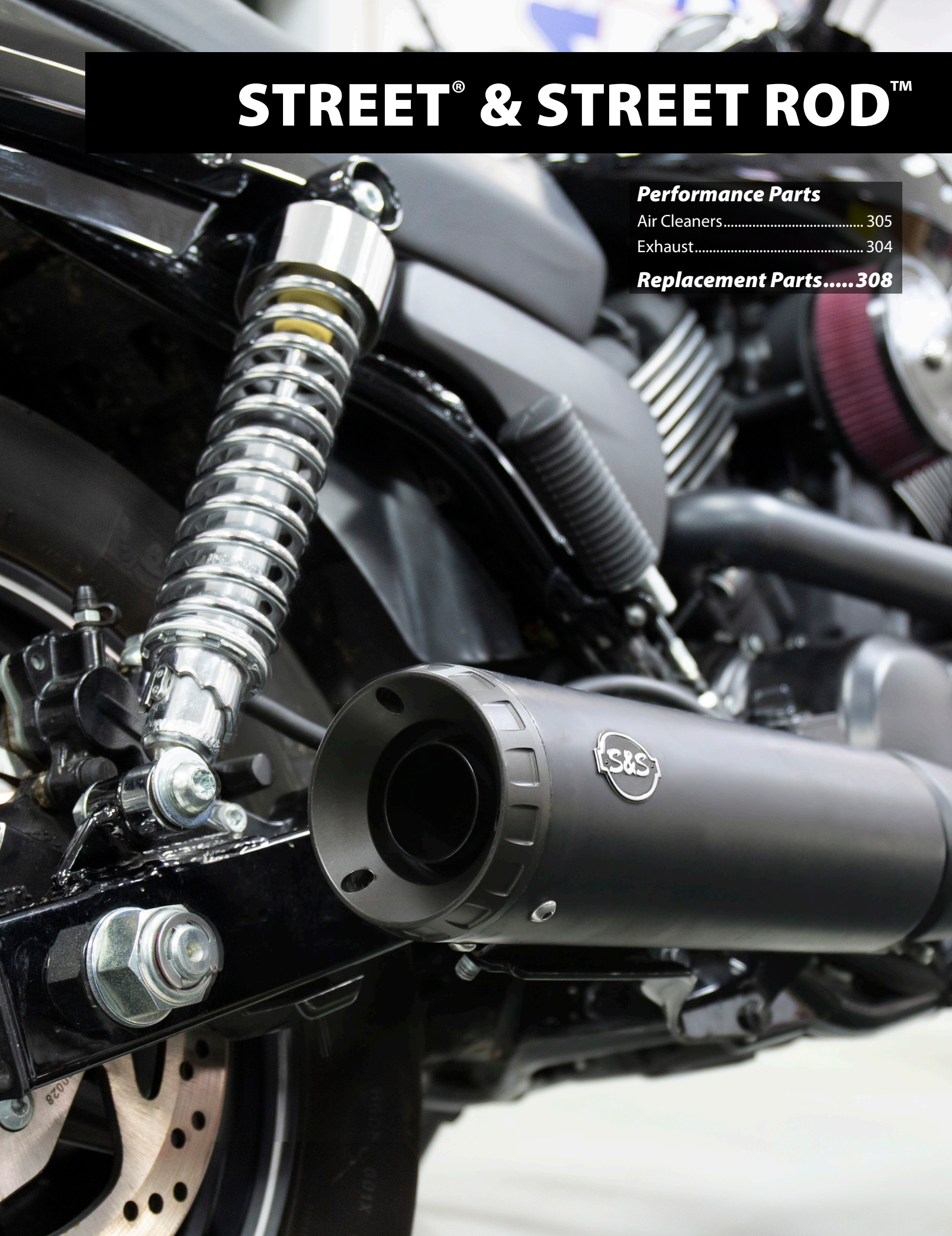

Performance Parts

Air Cleaners..... 305

Exhaust..... 304

Replacement Parts.....308

GRAND NATIONAL® 4" SLIP-ON MUFFLER

FITMENT
- 2014–'20 Harley-Davidson® Street XG750, XG500, & Street Rod™



FEATURES AND BENEFITS
- 10% increase in HP & torque when coupled with S&S® Stealth Air Cleaner Kit
- Race inspired sound & stainless steel baffle
- Black ceramic finish matches stock header pipe
- SAE J2825 sound level compliant
- 50-state legal
- Removable dB reducer
- Made in USA!

GRAND NATIONAL 4" SLIP-ON MUFFLER FOR 2014–'20 HD® STREET® XG750, XG500 & STREET ROD™

Description	Part #
Black	**550-0703**

*Qualified Manufacturer Declared Emissions Replacement Part on all 2014-2020 Street Models

⚠ WARNING: Cancer and Reproductive Harm – www.P65Warnings.ca.gov

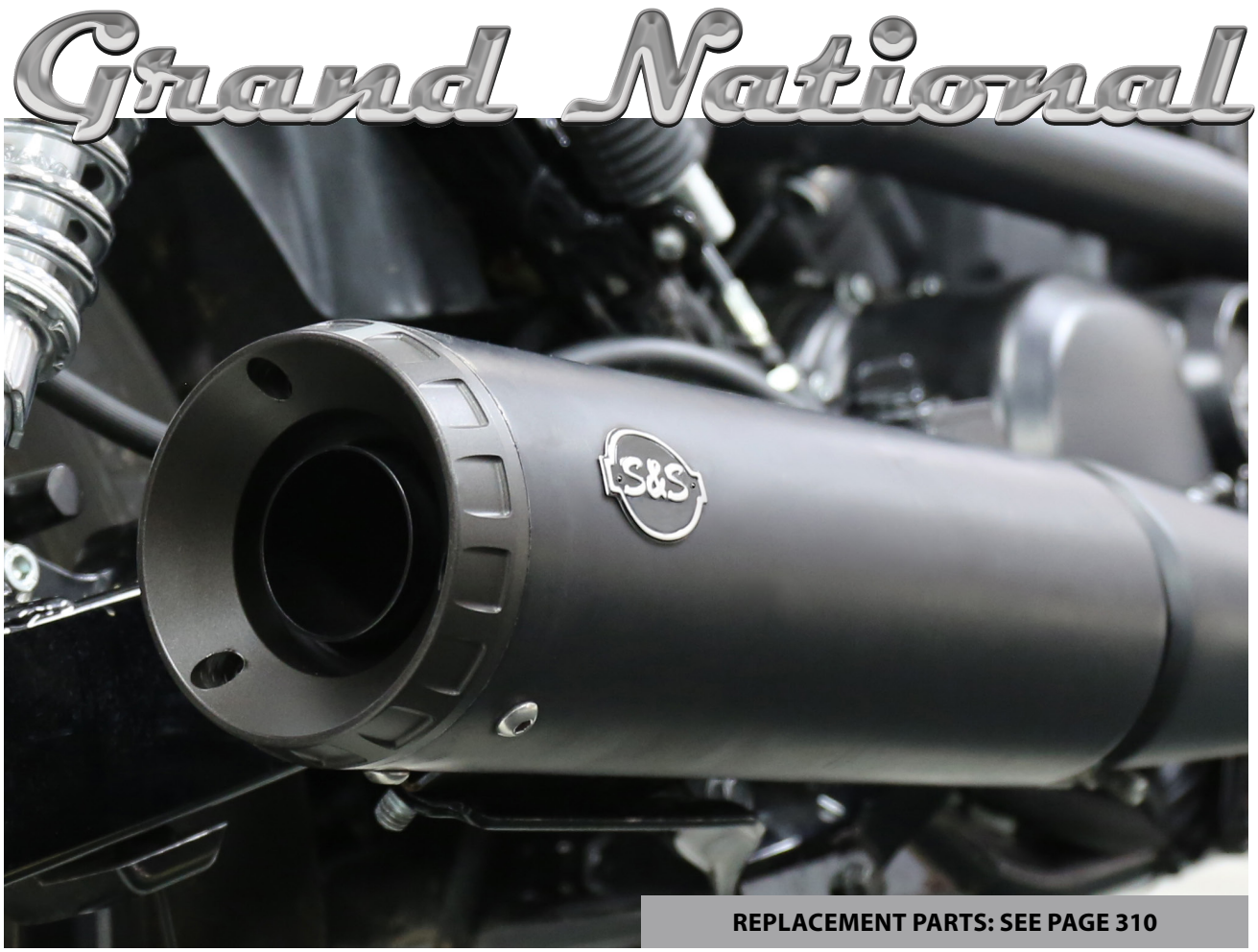

REPLACEMENT PARTS: SEE PAGE 310

STEALTH AIR CLEANER KITS
2014–2019 STREET XG750 AND XG500



FITMENT
- 2014–2019 Street XG750 and XG500

FEATURES AND BENEFITS
- 6.7% more horsepower and 11.6% more torque *(AC and Stock Muffler)*
- Increased air flow 290 cfm vs. stock 110cfm
- Compatible with S&S Stealth air cleaner covers *(except Airstream)*

MINI TEARDROP STEALTH AIR CLEANER KITS
KIT INCLUDES STEALTH AIR CLEANER KIT 170-0374B WHICH IS EXEMPT FROM EMISSIONS TAMPERING REGULATIONS UNDER CARB EO# D-355-26

Fitment	Fuel System	Finish	Part #
2014–2019 Street XG750 and XG500	Stock Bore	Chrome	**170-0445B±**
		Gloss Black	**170-0446B**

CARB compliant EO #D-355-26

±⚠WARNING: Cancer and Reproductive Harm – www.P65Warnings.ca.gov

STEALTH AIR CLEANER KIT FOR 2014–2018 STREET XG750 & XG500 EXEMPT FROM EMISSIONS TAMPERING REGULATIONS UNDER CARB EO# D-355-26

Description	Part #
Stealth Air Cleaner Kit for Street	**170-0374B**

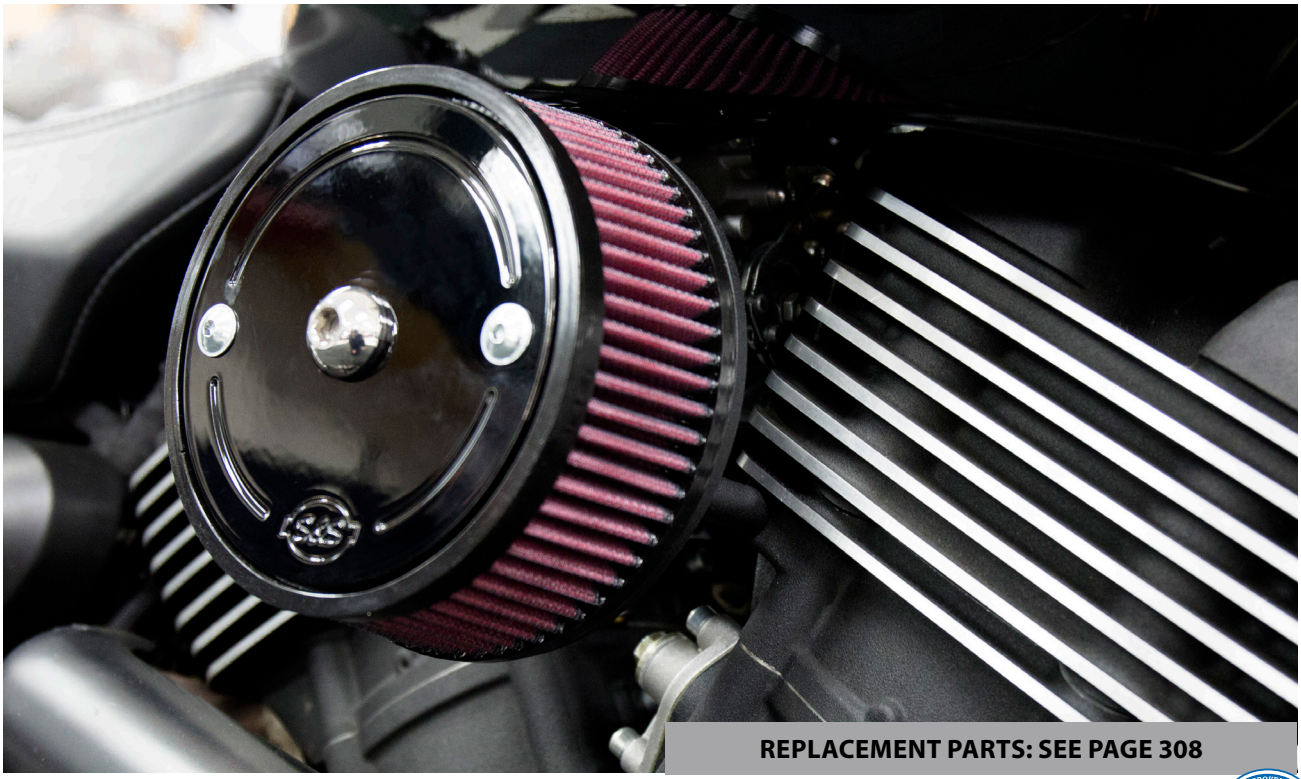

REPLACEMENT PARTS: SEE PAGE 308

STEALTH AIR CLEANER KITS
2017–'19 HARLEY-DAVIDSON® STREET ROD™ MODELS

FITMENT
- 2017–'19 Harley-Davidson® Street Rod™

FEATURES AND BENEFITS
- High-strength synthetic polymer backplate — Designed to reduce heat transfer to intake air
- 210% increase in flow
- Pair with one of many covers *(cover not included; see next page for options)*
- Cooler, denser air allows for more efficient cylinder fill and better performance
- Pre-filters are available

MINI TEARDROP STEALTH AIR CLEANER KITS
KIT INCLUDES STEALTH AIR CLEANER KIT 170-0414B WHICH IS EXEMPT FROM EMISSIONS TAMPERING REGULATIONS UNDER CARB EO# D-355-26

Fitment	Fuel System	Finish	Part #
2017–'19 Harley-Davidson® Street Rod™ XG750A	Dual Bore	Chrome	**170-0443B±**
		Gloss Black	**170-0444B**

CARB compliant EO #D-355-26

±⚠ WARNING: Cancer and Reproductive Harm – www.P65Warnings.ca.gov

STEALTH AC KIT FOR 2017–'19 HD® STREET ROD™ EXEMPT FROM EMISSIONS TAMPERING REGULATIONS UNDER CARB EO# D-355-26

Description	Part #
Stealth Air Cleaner Kit	**170-0414B**

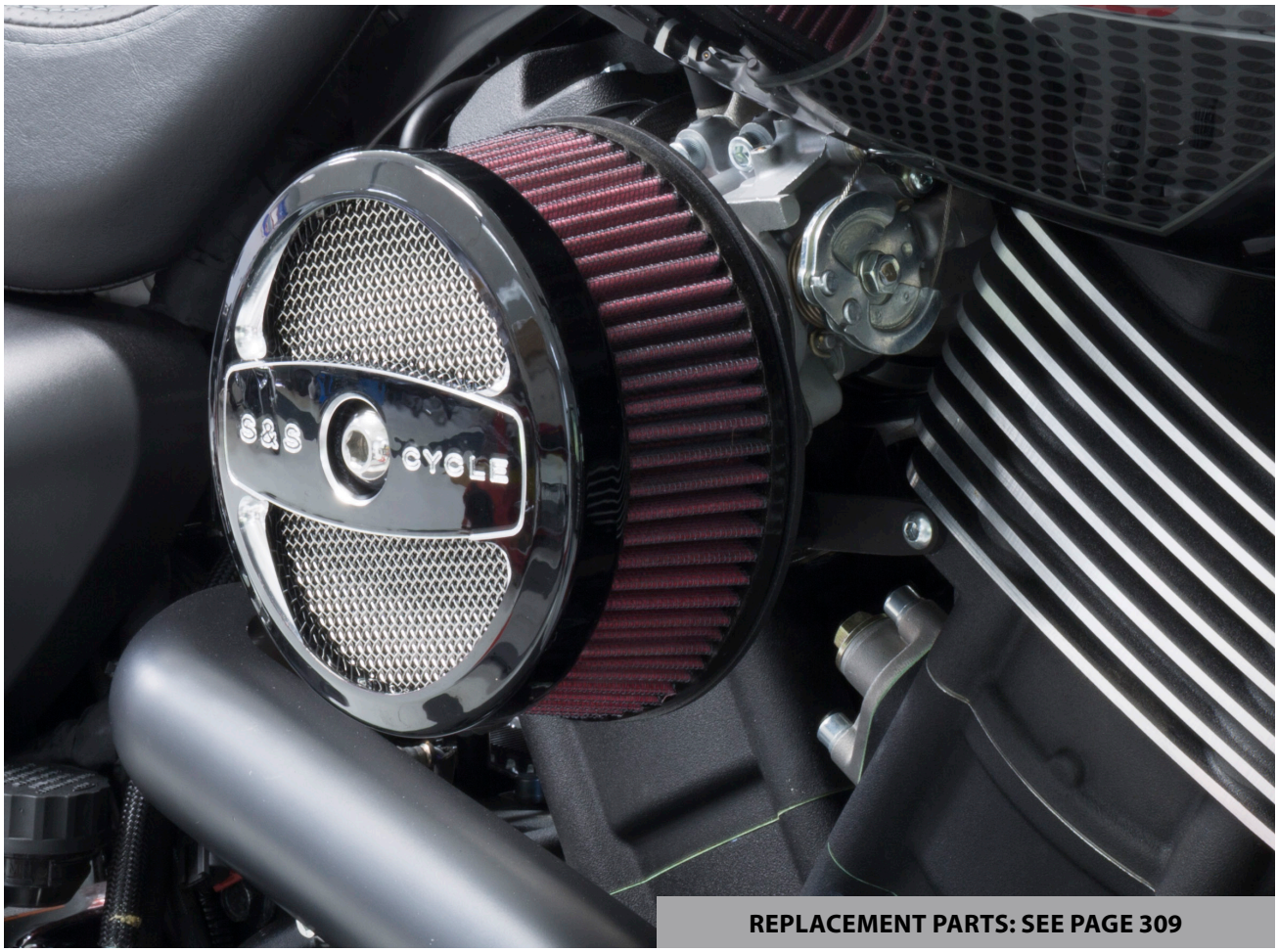

REPLACEMENT PARTS: SEE PAGE 309

STEALTH AIR CLEANER KIT COVERS INCLUDING THE NEW STEALTH TRIBUTE



NEW FOR 2020 FROM S&S CYCLE

Stealth Tribute





Teardrop

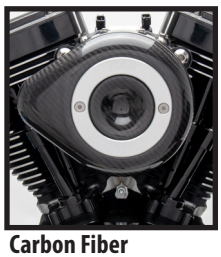

Carbon Fiber



Mini in Gloss Black



Tri-Spoke



Torker



Air 1



Airstream in Chrome



Airstream in Gloss Black



Muscle in Chrome



Muscle in Gloss Black

STEALTH COVERS

NEW FOR 2020 Tribute		Teardrop		Teardrop—Slasher		Carbon Fiber	Mini	
Chrome	Gloss Black	Chrome	Gloss Black	Chrome	Gloss Black	Black	Chrome	Gloss Black
170-0592	170-0593	170-0530	170-0531	170-0532	170-0533	170-0501	170-0367	170-0366

Tri-Spoke	Torker	Air 1	Airstream		Muscle	
Gloss Black w/Highlights	Gloss Black w/Highlights	Gloss Black w/Highlights	Chrome	Gloss Black	Chrome	Gloss Black with Highlighted Logo
170-0210	170-0206	170-0214	170-0118	170-0396	170-0121	170-0463

Displacement		
111	124	143
170-0319	170-0321	170-0323

⚠WARNING: Cancer and Reproductive Harm – www.P65Warnings.ca.gov

STEALTH AIR CLEANER KIT REPLACEMENT PARTS
FOR STREET® MODELS

1. Filter,Air,Tprd,StdPlt,5.500" x 6.000"..... **170-0126**
2. Gasket,Intake,1.720"..... **170-0371**
3. Screw,SHCB,⅜-18 x .500",Pol,Stnls Stl **170-0508**
4. Plate,Top,Air Filter,S&S® Logo,GlBlk **170-0379**
5. Screw,SHC,Flng Btn,¼-20 UNC x .750" (2 Req)..... **500-0060**

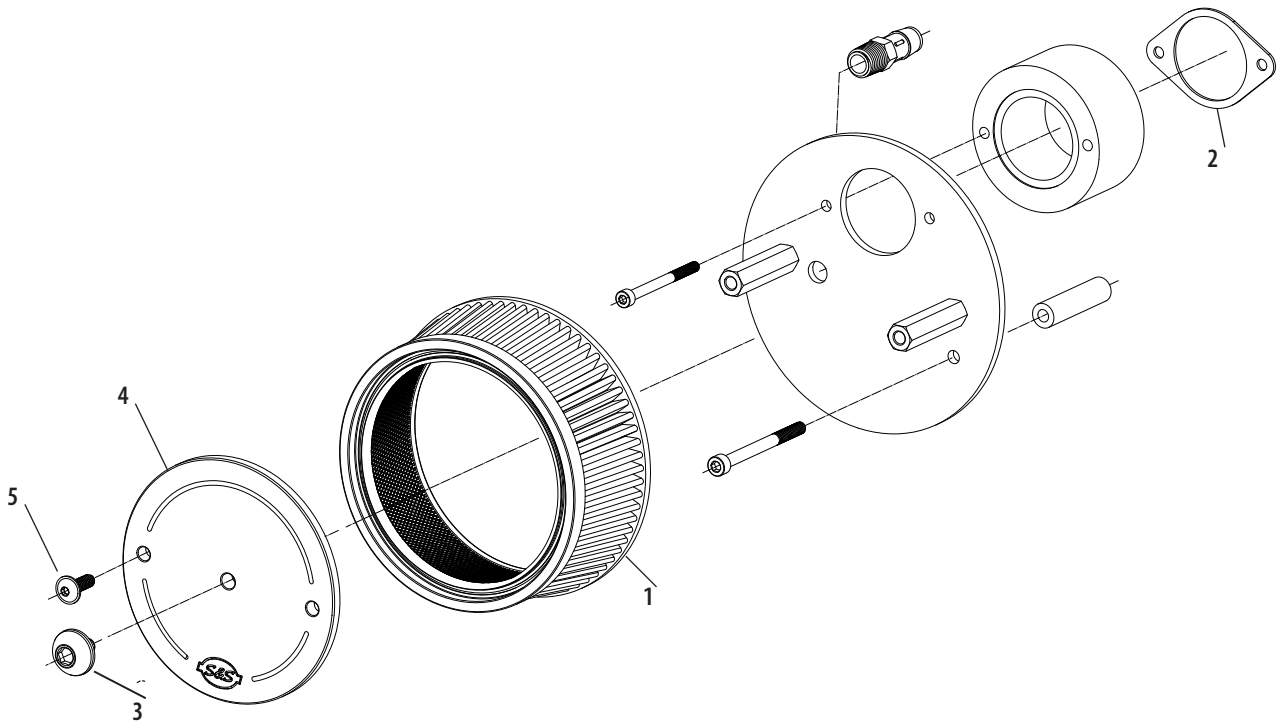

STEALTH AIR CLEANER KIT REPLACEMENT PARTS
FOR STREET ROD™ MODELS

1. Top plate, filter, air, molded, plastic **170-0026**
2. Filter, air, tapered, standard, pleated, 5.50" X 6.00"..... **170-0126**
3. Backplate, air cleaner, dual bore, injection molded **170-0415**
4. Hardware Kit,Stealth,2017 Street Rod™..... **500-0690**

   Includes: Gasket, Intake, Dual Bore 2017 Street Rod™
   Bracket, Backplate, PC, Blk, '17 Street Rod
   Screw, SCH, 1/4-20 x 5/8", Zinc, Steel
   Screw;BHC;M6 x 20mm;Zinc;ASTM F835M-1986 (QTY 5)
   Sealant, Loctite®, #243, .5ml

5. Screw, SBHCS, 5⁄16-18 UNC x .500", Polished, stainless.... **170-0508**
6. Screw, SHC, flanged button, 1⁄4-20 UNC x .750" **500-0060**

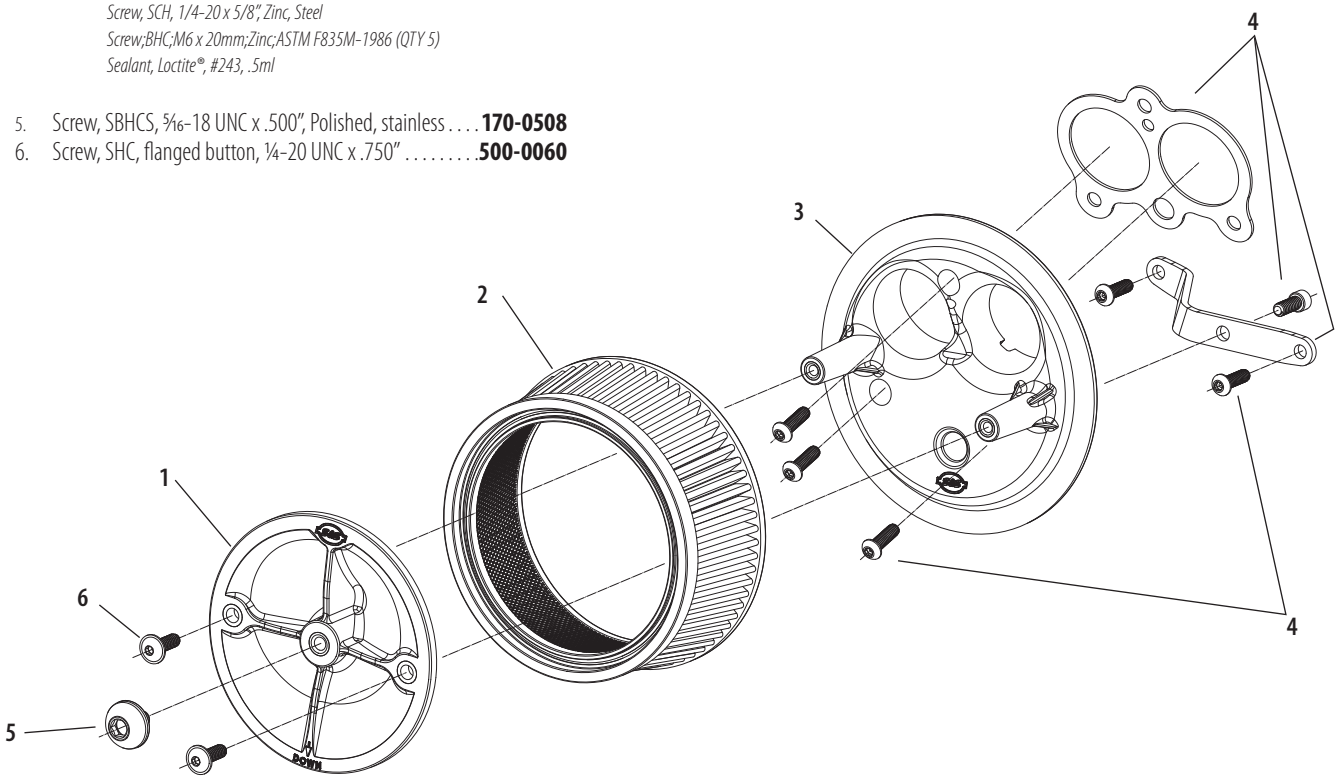

GRAND NATIONAL 4" MUFFLER REPLACEMENT PARTS

1. Muffler,Body (shown for placement only)..... **N/A**
2. End cap,4"..... **551-0291**
3. Baffle Assembly, 2014-2017 HD® Street®..... **551-0270**
4. Insulation,Muffler,Pillow Pack,13" x 11.5"..... **551-0276**
5. Screw,BHC,High Temp Lock Patch,1/4-20 x 3/8",Stainless Steel (2 Req)..... **500-0441**
6. Baffle, asm, muffler, 4"..... **551-0063**
7. SHCS,10-32 x .75" (3 Req)..... **500-0569**

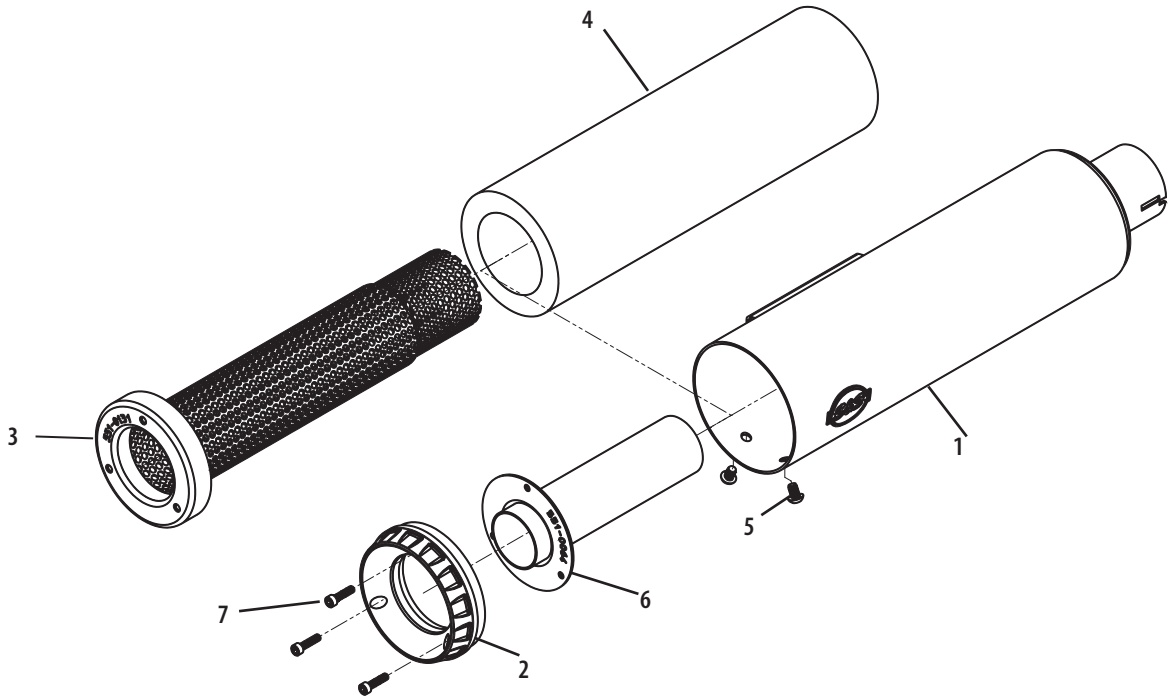

INDIAN® MODELS



Performance Parts

Air Cleaner Kit for Indian® Models 316
Air Cleaner Kit for Indian® Scout®, Indian® Scout® Sixty, Indian® Scout® Bobber & Victory® Octane™.....315
Exhaust.....312

Replacement Parts..... 317

NEW FOR 2020 FROM S&S CYCLE

GRAND NATIONAL® SLIP-ON MUFFLER
FOR INDIAN® FTR 1200®

FEATURES AND BENEFITS

- Stainless steel can with exposed tig welds for factory race styling
- Carbon fiber heat shield
- Race inspired Grand National endcap
- Removable dB reducer
- Meets J2825 sound levels (with dB reducer)
- Made in USA!



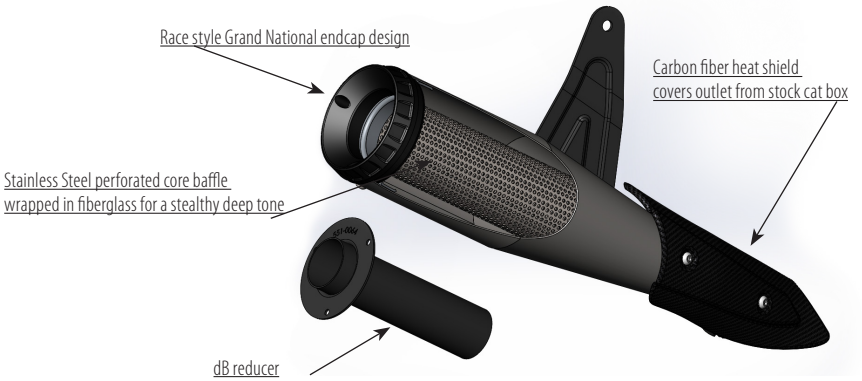

GRAND NATIONAL® SLIP-ON FOR 2019–2020 INDIAN® FTR 1200®

Stainless Steel	**550-0854**

*Qualified manufacturer declared U.S. 50-State legal emissions replacement part on all MY 2019-2020 FTR1200 models



REPLACEMENT PARTS: SEE PAGE 318

NEW FOR 2020 FROM S&S CYCLE

GRAND NATIONAL® 2:2 HIGH FOR INDIAN® FTR 1200®

CARB compliant
CARB EO K-010-8

FEATURES AND BENEFITS

- S&S domination of American Flat Track series championship now available for FTR 1200
- True race replica system has same 3.5" can and Grand National endcap design styling as mighty FTR 750 racers
- 50 State legal CARB EO# K-010-8
- Features S&S engineered high flow catalytic converters that bring legal performance to the street!
- Header and muffler heat shields protect rider from excessive heat
- Meets SAE J2825 sound standard
- Made in the USA!



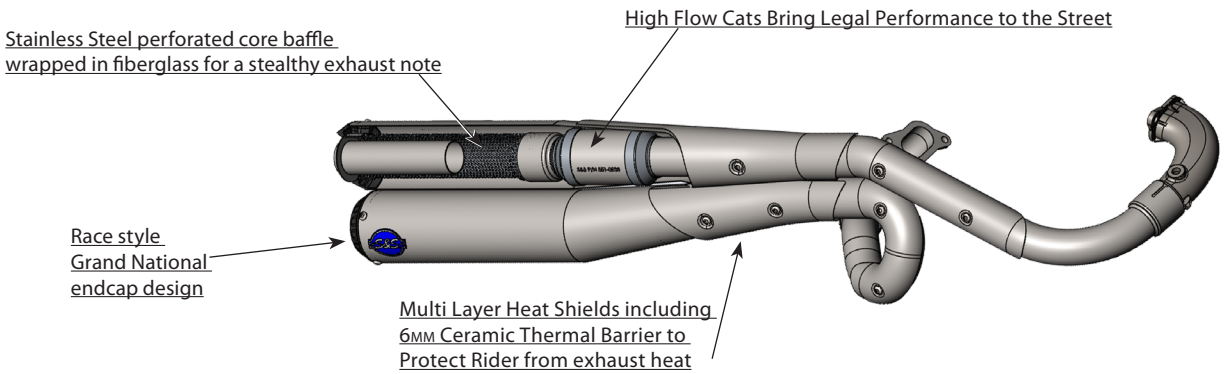

GRAND NATIONAL® 2:2 HIGH FOR 2019 INDIAN® FTR 1200® — STREET LEGAL

Stainless Steel	**550-0950A**

Exempt from emissions tampering regulations under CARB EO# K-010-8 for all 2019 Indian FTR 1200 Models



REPLACEMENT PARTS: SEE PAGE 319

EC GRAND NATIONAL® SLIP-ON MUFFLER
FOR INDIAN® FTR 1200® (FOR EUROPE)

FEATURES & BENEFITS
- EC approved with S&S performance and style
- Race-inspired Grand National® endcap design
- All hardware and gaskets included
- Made in USA





GRAND NATIONAL® EC SLIP-ON FOR 2019–2020 INDIAN® FTR 1200®

Stainless Steel	**550-0962**

EU Type-Approval: e9*134/2014*2018/295G*11033*00

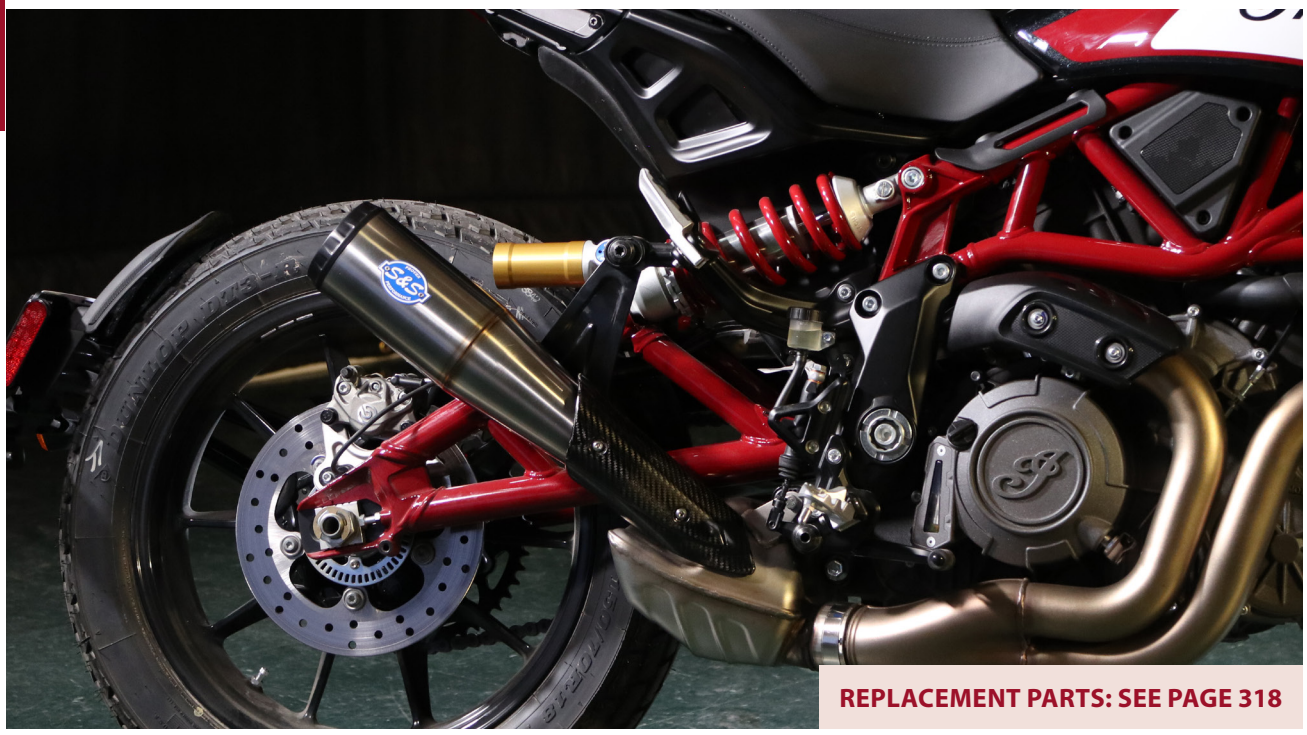

REPLACEMENT PARTS: SEE PAGE 318

STEALTHTWO AIR CLEANER KIT
FOR INDIAN® SCOUT®, INDIAN® SCOUT® SIXTY, INDIAN® SCOUT® BOBBER, AND VICTORY® OCTANE™

FITMENT

CARB compliant
EO #D-355-28

- 2015–2019 Indian Scout
- 2015–2019 Indian Scout Sixty
- 2015–2019 Indian Scout Bobber
- 2017 Victory Octane

FEATURES AND BENEFITS

- Bolt-on air cleaner assembly with high flow, washable filter media
- 127% increase in flow
- Simple one-piece construction
- Made in the USA
- Exempt from emissions tampering regulations under CARB EO# D-355-28

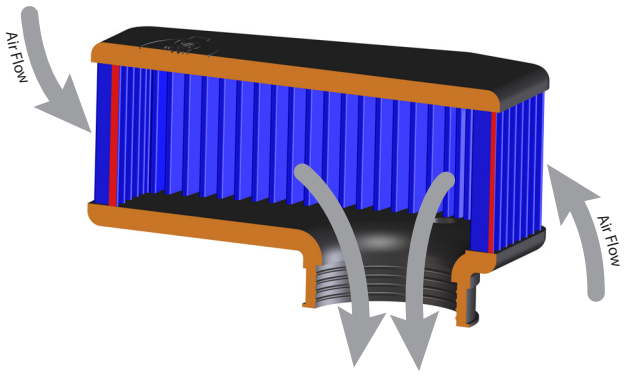

The S&S StealthTwo air cleaner features increased filter area and a radiused inlet. Together, they provide a smooth path for air to flow into the throttle body. Reduced turbulence! Increased flow! More power!

STEALTHTWO AIR CLEANER KIT

Fitment	Part #
2015–2019 Indian® Scout®, 2015–2019 Indian® Scout® Sixty, 2015–2019 Indian® Scout® Bobber & 2017 Victory® Octane™	**170-0298D**

Exempt from emissions tampering regulations under CARB EO# D-355-28





AIR CLEANER KIT
FOR INDIAN® MODELS

CARB compliant
EO #D-355-28

FITMENT
- 2014–2019 Indian® Chieftain®, Classic, Vintage, & Roadmaster Models

FEATURES AND BENEFITS
- Increase of 5 hp when paired with performance mufflers and tuning
- High flow air filter provides:
  - 2x increase in surface area
  - 37% increase in airflow
  - High quality, washable cotton gauze filter
- Engineered to maintain leg clearance
- Billet aluminum for greater durability
- Show quality chrome billet cover options available

AIR CLEANER KIT FOR INDIAN® MODELS

FITMENT	Part #
All 2014–2019 Indian Models originally equipped with TS111 Engines with S&S® Nostalgic Script Cover	**170-0294D**±
All 2014–2019 Indian Models originally equipped with TS111 Engines with S&S® Cycle Logo Cover	**170-0295D**±

Exempt from emissions tampering regulations under CARB EO# D-355-28
± ⚠ WARNING: Cancer and Reproductive Harm – www.P65Warnings.ca.gov



S&S High flow air filter provides 2x increase in surface area for a 37% increase in airflow.



170-0295D



170-0294D

REPLACEMENT PARTS: SEE PAGE 317

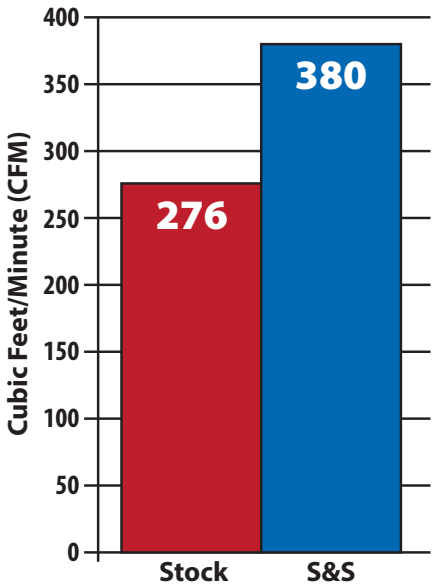

The S&S Air Cleaner Kit provides 104 cfm (37.7%) more air than the stock air cleaner.*

**Tests conducted on a Super Flow 1020 flow bench at 28 inches of water test pressure.*

AIR CLEANER KIT REPLACEMENT PARTS
FOR INDIAN® MODELS

1. Screw, SHC Low Profile, 25mm, M6 x 1, Chrome ..... **N/A**
2. Cover, Air Cleaner
   S&S Logo ..... **170-0242±**
   S&S Nostaligic Script ..... **170-0239±**
3. Filter, Air, Tapered, Standard Pleated Cotton **170-0228**
4. Standoff, Air Filter **170-0232**
5. Screw, SHC, Flat, 16mm, M6 x 1, Zinc **500-0291**
6. Backplate, Air Filter Element **170-0230**
7. Gasket, Backplate **170-0233**
8. Fitting, 45°, 3/8" NPT x 5/8" Barb, Zinc Plated **500-0267**
9. Backplate, Throttle Body **170-0229**
10. Screw, SHC Low Profile, 25mm, M6 x 1, Zinc **500-0271**
11. Washer, Flat, M6, Zinc **500-0272**
12. Bracket, Backplate **170-0236**
13. Grommet, Backplate, Rubber **500-0269**
14. Spacer, Zinc **500-0270**
15. Air Cleaner Kit **170-0227D**





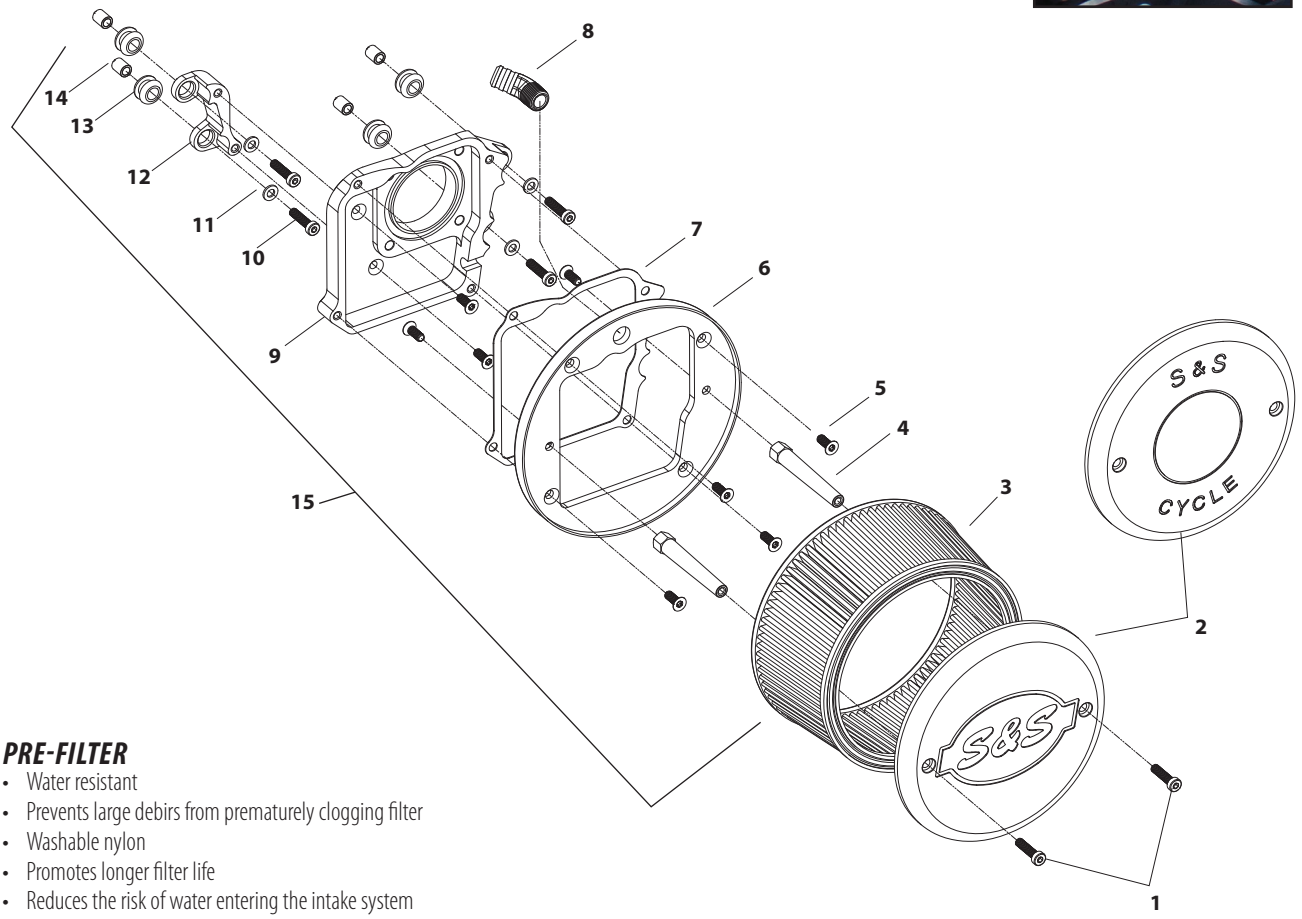

PRE-FILTER

- Water resistant
- Prevents large debirs from prematurely clogging filter
- Washable nylon
- Promotes longer filter life
- Reduces the risk of water entering the intake system
- No tools required for installation

PRE-FILTER | **170-0255**

± ⚠ WARNING: Cancer and Reproductive Harm – www.P65Warnings.ca.gov

GRAND NATIONAL® SLIP-ON MUFFLER
REPLACEMENT PARTS FOR INDIAN® FTR 1200® (INCLUDING EC VERSION)

1. Muffler **551-1040**
2. Heat Shield **551-0982**
3. Bracket **551-0987**

Hardware Kit (includes 4-8 below) **551-1042**
4. Plate, Nut, 5/16-18 x 2"", Chrome **551-0469**
5. Nut, Clip-On, 1/4-20, Zinc Plated **500-0848**
6. Screw, BHC, 1/4-20 x 5/16"", Stainless Steel **500-0846**
7. Screw, BHC, High Temp Lock Patch, 5/16-18 x 5/8"", Stainless Steel **500-1091**
8. Nut, Lock, Nylon Insert, M8 x 1.25mm x 13mm x 8mm, Stainless Steel **500-1100**

9. Endcap **551-0291**

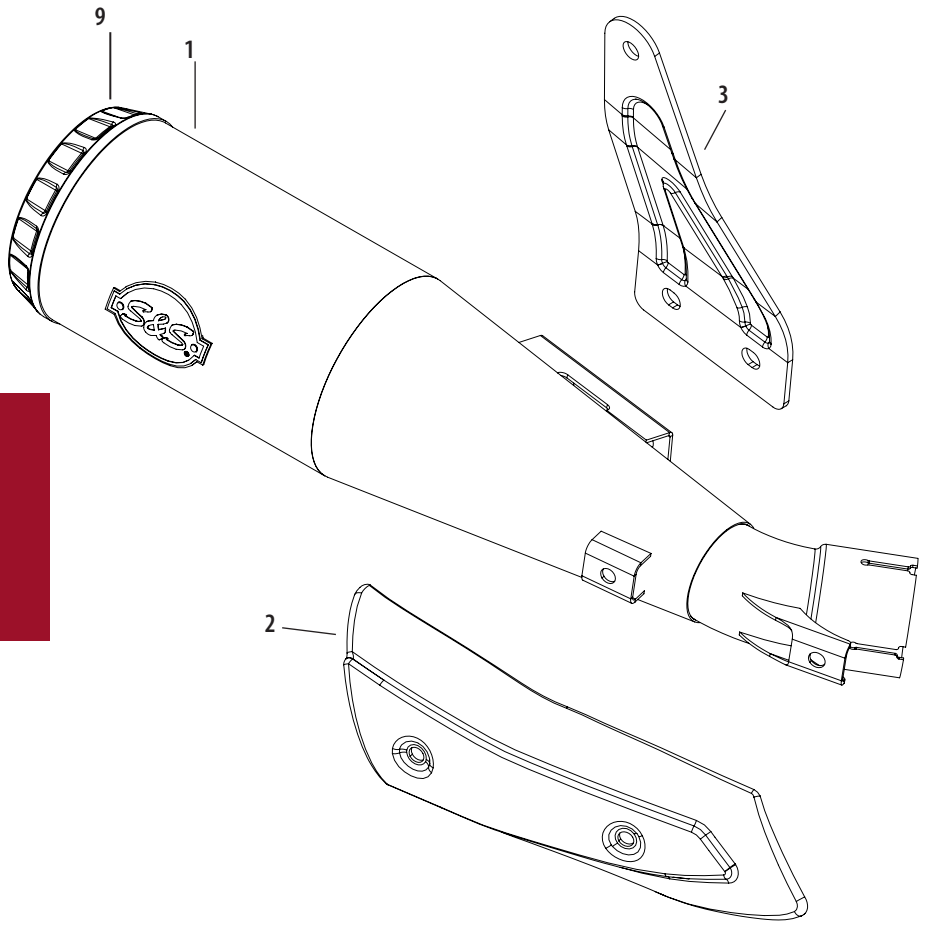

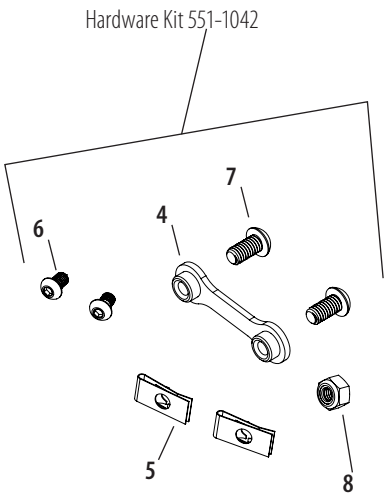

2

GRAND NATIONAL® 2:2 HIGH
REPLACEMENT PARTS FOR INDIAN® FTR 1200®

1. Muffler Assembly, Top **551-1165A**
2. Muffler Assembly, Bottom **551-1166A**
3. Heat Shield, Top **551-1107A**
4. Heat Shield, Bottom **551-1109A**
5. Heat Shield, Rear **551-1111A**
6. Heat Shield, Front **551-1113A**
7. Adapter, Front **551-1068**
8. Adapter, Rear **551-1069**
9. Mounting Bracket **551-1114**
10. Header, Front **551-1119**
11. Header, Rear **551-1122**
12. Gasket, Muffler **551-1129**
13. Plate, Nut, 5/16-18 x 2", Clear, Zinc **551-0469**
14. Screw, BHC, High Temp Lock Patch, 5/16-18 x 5/8", Stainless Steel **500-1091**
15. Screw, BHC, High Temp Lock Patch, M6 x 1 x 10mm, Stainless Steel **500-1090**
16. Clamp, Band Style, 2.06" - 2.31" **551-1181**
17. Screw, BHC, M8 x 16mm, Stainless Steel **500-1189**

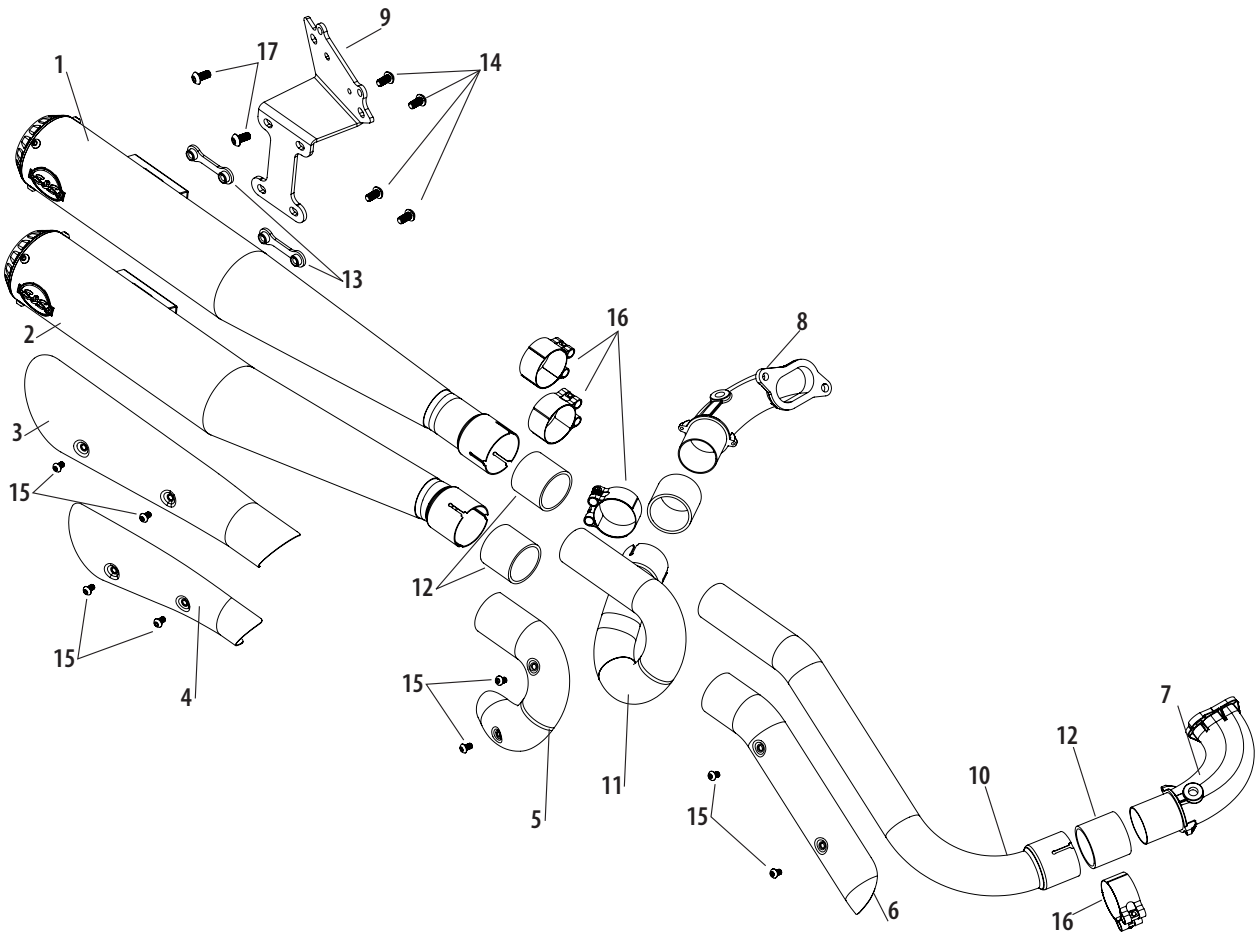



S&S Late Models 1999–up
320 Order 608-627-1497

TOOLS & SHOP SUPPLIES



Anti-Rotation Bracket 328
Bearing Protector Tools 324
Boring Plate Kits 325
Cam Alignment Tools 324
Carburetor Jet Kits 330
Champion® Spark Plugs 329
Compression Release Socket Kit 325
Connecting Rod Checking Pins 325
Crankcase Oil Passage Drilling Jig 328
Crankpin Nut Clearancing Gauges 328
Cylinder Torque Plate Kits 326
Dealer Service Kit (Exhaust) 332
Degree Wheel Kit 327
Engine Stands 332
Flywheel Balancing Kits 322
Flywheel Tools 323
Inner Primary Bearing Race Installer 324
Main Bearing Installation Tool 324
Main Jet Tool 325
Oil Filters 329
Rocker Cover Wrench Set 325
S&S® Oil 329
Tappet Block Alignment Tool 328
Top Dead Center Tool 325
Top End Tools 325
Touch Up Paint, Lubricant, Sealants 332
X-Wedge® Tools 324

FLYWHEEL BALANCING KITS

THE S&S® MASTER FLYWHEEL BALANCING KIT

Description		Part #
Designed to allow the average shop to rebalance stock and S&S flywheels accurately and quickly. Whether doing a stock rebuild or a performance upgrade using aftermarket parts, flywheel rebalancing is a desirable step in the engine building process. A complete set of detailed instructions is furnished with each kit. For flywheels with tapered crankpins only.		**53-0027**
Replacement Parts		
1. Balance,Triple Beam Platform		**N/A**
2. Replacement balance weight set, (1-500g 2-1000g)		**53-0021**
3. Balance shaft, 1936–'71 OHV bt and 1957–'71 xl		**53-0090**
4. Balance shaft nut *(each)*		**53-0092**
5. Balance stand *(each)*		**53-0088**
6. Rod support stand *(each)*		**53-0089**
7. Taper adapter, 1972–Early '81 bt *(each)*		**53-0086**
8. Taper adapter, Late 1981–'85 bt and S&S BL, SE, SL style *(each)*		**53-0087**
9. Shaft adapter, 1977–up xl driveside (screws on) *(each)*		**53-0093**
10. Shaft adapter, 1977–up xl camside (screws on) *(each)*		**53-0095**
11.Shaft adapter, 1955–'99 bt driveside (screws on) *(each)*		**53-0091**
12. Shaft adapter, 1958–'92 bt camside (LH, screws on) *(each)*		**53-0101**
13. Shaft adapter, 1993–'99 bt camside (RH, screws on) *(each)*		**53-0102**
14. Shaft adapter, counterweight *(each)*		**53-0099**
15. Collar spacer, 1970–'99 bt *(each)*		**53-0097**
16. Collar spacer, 1986–'90 driveside for xl - .280" *(each)*		**53-0098**
17. Collar spacer. 1991–up driveside for xl - .860" *(each)*		**53-0085**
18. Bob weight assembly, 1000 gram *(each)*		**53-0094**
Repair parts for 53-0094		
Screw SHC, ½"-13 x ¾"	*Each*	**50-0200**
Screw SHC, ½"-13 x 1¼"	*Each*	**50-0201**
19. Shims		
2.7 gram	*Each*	**53-0110**
5.4 gram	*Each*	**53-0105**
8.1 gram		**53-0115**
10.8 gram		**53-0120**
13.4 gram	*Each*	**53-0125**
50 gram		**53-0150**
100 gram *25566-06*		**53-0100**
20. Shim Kit Includes: Shims *(2 each)* 2.7, 5.4, 8.1, 10.8, and 13.4 grams & Shims *(1 each)* 50 grams and 100 grams		**53-0111**

NOTE

These balancing kits will not work with Harley-Davidson® Twin Cam 88® engines, 2000–up Sportster models, or any flywheel assemblies which use pressed-in crankpins.

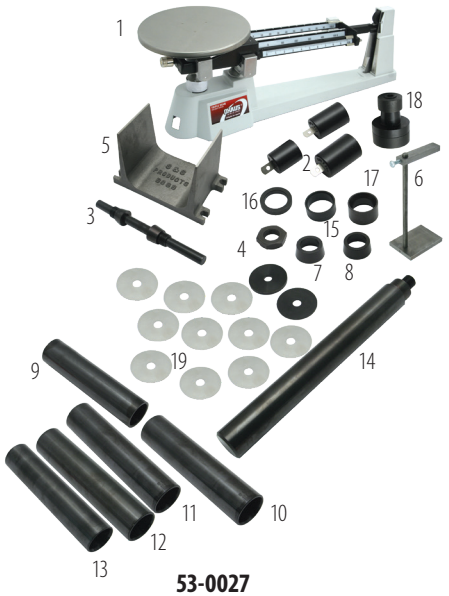

53-0027

S&S® FLYWHEEL BALANCE KITS

Master Balance Kit Without Balance Scale	
Includes all parts in #53-0027, except balance & platform scales	**53-0028**
Triple Beam Platform Balance Scale	
(2610 grams\maximum) without weights	**53-0011**
Flywheel Balance Kit For 5-Piece Cranks	
For 5-Piece Crank	**53-0012**
Includes:	
3.Balance shaft	**53-0090**
4. Balance shaft nut	**53-0092**
5. Balance stand	**53-0088**
6. Rod support stand	**53-0089**
7. Taper adapter	**53-0086**
8. Taper adapter	**53-0087**
18. Bob weight 1000 gram	**53-0094**
19.Shims (See previous page for individual part numbers)	
Flywheel Balance Kit For 3-Piece Cranks	
For Harley-Davidson® Evolution® and Sportster® Models	**53-0015**
Includes:	
9. Driveside adapter sleeve for 1977–up Sportster	**53-0093**
10. Camside adapter sleeve for 1977–up Sportster	**53-0095**
11. Driveside adapter sleeve for 1955–'99 big twin	**53-0091**
12. Camside adapter for 1958–'92 big twin	**53-0101**
13. Camside adapter for 1993–'99 big twin	**53-0102**
14. Shaft counterweight	**53-0099**
15. Collar spacer for 1970–'99 big twin	**53-0097**
16. Collar spacer for 1986–'90 Sportster	**53-0098**
17. Collar spacer for 1991–up Sportster	**53-0085**



53-0015



53-0028



All Shims

53-0012

FLYWHEEL ASSEMBLY FIXTURE & TRUING SPANNER

- Includes a massive fixture to hold the flywheels, flywheel clamps and hardware to mount the flywheel to the fixture, and a spanner bar plate to be used with a length of steel pipe to fabricate a long spanner bar for truing adjustments.
- Allows the assembler to torque the mainshaft and crankpin nuts to our higher than stock torque specs. (We recommend using a torque multiplier.) Once the flywheels are assembled, the spanner bar (some assembly required) can be used to shift the flywheels in order to bring the mainshafts into true. This method is much easier, faster, and safer than hitting the flywheels with a lead or brass hammer to true the assembly.
- Works for stock and S&S flywheels for 1936–'99 big twin and 1957–'03 Sportster® models.

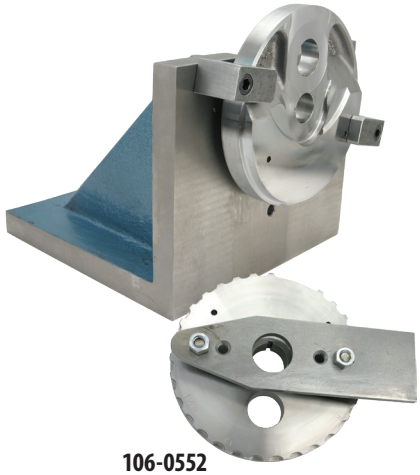

106-0552

FLYWHEEL ASSEMBLY FIXTURE	
Description	**Part #**
Includes clamps, plate, and hardware	**106-0552**
REPLACEMENT PARTS	
Flywheel Fixture Clamp	**106-0483**
Spanner Bar Plate	**106-0783**

BEARING PROTECTOR TOOLS
FOR S&S® X-WEDGE® ENGINES

FEATURES AND BENEFITS

- Slips over the bearing surface of the X-Wedge crankshaft to prevent damage to the surface of the main bearing journal when mounting the crank on an S&S flywheel assembly fixture
- The flanged sleeve offers protection against scratches and dents
- It can also be used on the sprocket side of Victory® crankshafts
- Made of billet aluminum


1

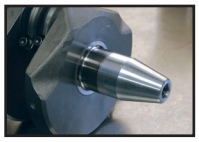
2


3

Easy as 1-2-3! 106-2859 crankcase bearing protector installs in seconds, and not only protects the crankcase main bearing insert from the sharp surfaces on the sprocket shaft, but also guides the crankshaft into the bearing.


106-2858


106-2859

BEARING PROTECTOR TOOLS

Description	Part #
Crankshaft Main Bearing Protector	**106-2858**
Crankcase Main Bearing Insert Protector	**106-2859**

CAM ALIGNMENT TOOLS
FOR X-WEDGE® ENGINES

- Three dowel pins are used to position each of the three cam belt pulleys with alignment holes in the cam plate


106-0750

CAM ALIGNMENT TOOLS

Description		Part #
Cam Alignment Dowels	*3 pack*	**106-0576**
Cam Belt Tensioner Socket		**106-0750**

MAIN BEARING INSTALLATION TOOL
FOR X-WEDGE® ENGINES

- Consists of a bearing guide that holds the two plain bearing halves in position and a shouldered press tool that fits through the guide to press the new bearings into the crankcase
- The press tool is also used by itself to press old bearings out of the crankcase
- For cam and driveside bearings in X-Wedge engines
- A hydraulic or arbor press is required to install or remove bearings.



MAIN BEARING INSTALLATION TOOL FOR X-WEDGE® ENGINES

Main Bearing Installation Kit	**106-0718**

PRIMARY INNER BEARING RACE INSTALLATION TOOL

- Primary inner bearing race installation tool, with a roller thrust bearing that decreases the effort required to install a bearing race by 30%
- Attachment for the S&S Clutch Puller that allows easy removal of the primary inner bearing race
- All of these S&S tools are CNC machined from the finest 4140 tool steel and heat treated for maximum reliability and service life.



PRIMARY INNER BEARING RACE INSTALLATION TOOL

Inner Primary Bearing Race Installer	**56-5145**

TOP DEAD CENTER TOOL

- Easy to find the exact top dead center of any engine
- The best way to calibrate your degree wheel when dialing in cams or performing any number of checks and modifications based on the position of the crankshaft
- Available for engines with 14mm or 12mm spark plug holes.



53-0322



53-0040



53-0452



53-0045

NOTE Rocker covers must be removed when installing S&S compression releases. If lack of frame clearance prevents removal of rocker covers, engine must be removed from frame for compression release installation.

S&S® TOP DEAD CENTER TOOL	
Description	**Part #**
14mm	**53-0321**
12mm	**53-0322**
S&S ROCKER COVER WRENCH SET	
Helpful in areas where the motorcycle frame may prevent the use of conventional tools.	**53-0040**
CONNECTING ROD CHECKING PINS	
These pins are used to check alignment of connecting rods and wristpin bushings with crankcase cylinder decks.	
.927"	**53-0004**
S&S COMPRESSION RELEASE SOCKET KIT	
Allows in-frame installation of S&S compression releases and protects wiring from damage during installation.	**53-0045**
MAIN JET TOOL	
For changing main jets in all S&S carburetors using #72 series jets.	**53-0452**

BORING PLATE KITS
FOR CYLINDER HEADS AND CRANKCASE

- Designed to simplify and reduce the time required to prepare crankcases and cylinder heads for S&S® Sidewinder® big bore kit installations
- Machined cast iron with precision ground working surfaces

BORING PLATE KIT FOR 1936–'99 BIG TWIN AND 1986–'03 SPORTSTER® MODELS

Description	Part #
This boring plate kit has panhead and shovelhead head bolt patterns in one end. The other end is machined with the cylinder base patterns of 1936-'99 big twin engines, and 1986-'03 Harley-Davidson® Sportster models. Spacers are available for Evolution® engines which allow the cases to be bored without removing the cylinder studs (see below). Spacers are not included in this kit.	
Kit	**53-0006**
Boring plate (1)	**N/A**
Screw, 7/16" -20 x 1¼" Sockethead Cap	**50-0172**
SPACERS FOR EVOLUTION CRANKCASES	
Spacer part #53-0007 is required for 1986-'03 Sportster models. Spacers part #53-0007 and #53-0008 are both required for 1984–'99 big twin engines.	
3 11/16" tall	**53-0007**
⅞" tall	**53-0008**

BORING PLATE KIT FOR CRANKCASES & CYLINDERS FOR TWIN CAM 88® ENGINES

This boring plate kit is designed for boring stock crankcases of Harley-Davidson® Twin Cam 88® engines to accept S&S Super Sidewinder® 4" and 4⅛" bore cylinders with stock cylinder stud pattern. A spacer is included with the kit which allows the cases to be bored without removing the cylinder studs.	
Kit	**53-0035**
Boring plate	**53-0036**
Spacer, 3¾" tall	**53-0037**



53-0006



53-0007



53-0008



53-0035

CYLINDER TORQUE PLATE KITS

FITMENT

- 4.25 bore 2017–up touring models
- S&S 4⅛" bore
- 4" bore 1999–up big twin
- 3⅝" 1984–'99 big twin
- Harley-Davidson® Sportster® models in 3⅝" and 4" bore
- S&S X-Wedge® 4⅛" bore and 4¼" bore*

FEATURES AND BENEFITS

- S&S torque plates can be used in conjunction with an S&S boring fixture and a conventional boring bar, and they can be readily adapted to a Sunnen® type honing machine.

KIT CONTENTS

- Head end plate
- Base end plate
- Four long grade 8 socket head cap screws (holds the assembly together and supplies the pressure)
- Stop arm (keeps the cylinder and plates from turning while honing)

**These torque plates are required to bore or hone X-Wedge cylinders. They have the X-Wedge five bolt pattern and are available for 4⅛" bore and 4¼" bore cylinders.*

CYLINDER TORQUE PLATE REPLACEMENT PARTS

(See chart for specific part numbers.)

1. Base end torque plate
2. Head end torque plate
3. Stop arm
4. Torque bolts
5. Vise tab
6. Tab bolt



S&S® CYLINDER TORQUE PLATE KITS AND REPLACEMENT PARTS

Bore Size	Case Bolt Pattern	Kit Part #	Head End Plate	Base End Plate	Stop Arm	Bolt ⅜"-24 x 6"	Bolt 7/16"-20 x 6"	Bolt 7/16"-20 x 7"	Bolt M10 x 1.5MM x 160MM	Vise Tab	Tab Bolt 5/16"-18 x 1"
4.25	2017– up M8	**530-0038**	**530-0039**	**530-0044**	**53-0014**	–	–	**50-0192**	–	**53-0034**	**50-0108**
4⅛" - 4¼"	S&S® X-Wedge®	–	**106-0837**	**106-0835**	**53-0014**	**106-0840**	–	–	–	**53-0034**	**50-0108**
4⅜" - 4 7/16"	S&S 4⅜" Pattern	**53-0055**	**53-0056**	**53-0057**	**53-0014**	–	–	**50-0192**	–	**53-0034**	**50-0108**
4⅛"	Stock 1999–up big twin	**53-0054**	**106-3190**	**530-0060**	**53-0014**	–	–	–	**500-1053**	**53-0034**	**50-0108**
4⅛"	S&S 4⅛" Pattern	**53-0051**	**53-0052**	**53-0053**	**53-0014**	–	**50-0191**	–	–	**53-0034**	**50-0108**
3.927" - 4"	Stock 1999–up big twin	–	**53-0049**	**53-0050**	**53-0014**	–	–	**50-0192**	–	**53-0034**	**50-0108**
4"	S&S 4" Pattern	**53-0030**	–	**53-0032**	**53-0014**	–	**50-0191**	**50-0192**	–	**53-0034**	**50-0108**
3⅝"	1984–'99 big twin	**53-0016**	**53-0017**	**53-0018**	**53-0014**	–	–	**50-0192**	–	**53-0034**	**50-0108**
3⅝"	1984–'03 Sportster®	**53-0016**	**53-0017**	**53-0018**	**53-0014**	–	–	**50-0192**	–	**53-0034**	**50-0108**

S&S Cylinder torque plate kits are intended for aluminum cylinders including 1984-'99 Harley-Davidson® Evolution® big twin engines, 1986-'03 Sportster models, and 1999-up Twin Cam 88® engines.

S&S® CYLINDER TORQUE PLATE KITS

Bore Size	Case Bolt Pattern	Part #
4.25	2017– up M8	**530-0038**
4⅜" -4 7/16"	S&S 4⅜" Pattern	**53-0055**
4⅛"	Stock 1999–up big twin	**53-0054**
4⅛"	S&S 4⅛" Pattern	**53-0051**
4"	S&S 4" Pattern	**53-0030**
3⅝"	1984–'99 big twin	**53-0016**
3⅝"	1984–'03 Sportster®	**53-0016**

S&S Cylinder torque plate kits are intended for aluminum cylinders including 1984–'99 Harley-Davidson® Evolution® big twin engines, 1986–'03 Sportster models, and 1999–up big twin engines.

HEAD END PLATE

Bore Size	Case Bolt Pattern	Part #
4.25"	2017–up M8	**530-0039**
4¼"	S&S® X-Wedge®	**106-0837**
4⅜"	S&S 4⅜" Pattern	**53-0056**
4⅛"	Stock 1999-up big twin	**106-3190**
4⅛"	S&S 4⅛" Pattern	**53-0052**
4"	Stock 1999–up big twin	**53-0049**
3⅝"	1984–'99 big twin	**53-0017**
3⅝"	1984–'03 Sportster®	**53-0017**

BASE END PLATE

Bore Size	Case Bolt Pattern	Part #
4.25"	2017–up M8	**530-0044**
4¼"	S&S® X-Wedge®	**106-0835**
4⅜"	S&S 4⅜" Pattern	**53-0057**
4⅛"	Stock 1999–up big twin	**530-0060**
4⅛"	S&S 4⅛" Pattern	**53-0053**
4"	Stock 1999–up big twin	**53-0050**
4"	S&S 4" Pattern	**53-0032**
3⅝"	1984–'99 big twin	**53-0018**
3⅝"	1984–'03 Sportster®	**53-0018**

STOP ARM

Bore Size	Case Bolt Pattern	Part #
All	All	**53-0014**

BOLT ⅜"-24 X 6"

Bore Size	Bore Size	Part #
4¼"	S&S® X-Wedge®	**106-0840**

BOLT 7⁄16"-20 X 6"

Bore Size	Case Bolt Pattern		Part #
4⅛"	S&S® 4⅛" Pattern	*Each*	**50-0191**
		4 pack	**50-0191P**
4"	S&S 4" Pattern	*Each*	**50-0191**
		4 pack	**50-0191P**

BOLT 7⁄16"-20 X 7"

Bore Size	Case Bolt Pattern		Part #
4.25"	2017–up M8	*Each*	**50-0192**
		4 pack	**50-0192P**
4⅜"	S&S 4⅜" Pattern	*Each*	**50-0192**
		4 pack	**50-0192P**
4"	Stock 1999–up big twin	*Each*	**50-0192**
		4 pack	**50-0192P**
4"	S&S 4" Pattern	*Each*	**50-0192**
		4 pack	**50-0192P**
3⅝"	1984–'99 big twin	*Each*	**50-0192**
		4 pack	**50-0192P**
3⅝"	1984–'03 Sportster®	*Each*	**50-0192**
		4 pack	**50-0192P**

BOLT M10 x 1.5MM x 160MM

4⅛"	Stock 1999–up big twin	*Each*	**500-1053**
		4 pack	**500-1052**

VISE TAB

Bore Size	Case Bolt Pattern	Part #
All	All	**53-0034**

TAB BOLT 5⁄16"-18 X 1"

Bore	Case Bolt Pattern		Part #
All	All *3987*	*Each*	**50-0108**

DEGREE WHEEL KIT

- Multipurpose S&S® degree wheel can be used to do ignition timing, crankcase breather timing, cam degreeing, or you name it
- Designed to fit the sprocket shaft of any big twin or Harley-Davidson® Sportster® model simply by using the correct adapter provided
- Each kit also comes with a pointer which is held in place with the center crankcase bolt



53-0020

S&S DEGREE WHEEL KIT

Description	Part #
Kit	**53-0020**
Adapter for Sportster® models *(1 Each)*	**53-0023**
Adapter for big twin *(1 Each)*	**53-0024**
Pointer *(1 Each)*	**53-0025**
Degree wheel and main adapter assembly *(1 Each)*	**53-0026**

CRANKPIN NUT CLEARANCING GAUGES

- Designed to simplify and eliminate clearancing problems that may arise when installing stroker flywheels in stock big twin crankcases
- By painting the bosses to be clearanced and then placing the appropriate gauge on the main bearing race, the crankcases can be marked with a scribe in the proper hole for the stroke and style connecting rod crankpin nuts to be used—***quickly and precisely.***



S&S® CRANKPIN NUT CLEARANCING GAUGES

Description	Part #
1958–'99 Big Twin Gauge	**53-0005**

ANTI-ROTATION BRACKET

This handy bracket slides over the sprocket shaft splines of big twin engines and bolts to one of the primary bolt holes of the crankcase to keep the crank from rotating. It's like an extra set of hands while installing pistons and cylinders.



50-9870

Fitment	Part #
1970–2006 Big Twin (except '06 Dyna®)	**50-9870**
2007–up Big Twin, 2006 Dyna®	**530-0018**

CRANKCASE OIL PASSAGE DRILLING JIG



DRILL JIG IS USED TO DRILL . . .

- Primary chain oil supply passage from the breather valve gear cavity to the back side of the oil pump body on late generator and early alternator crankcases.
- Pressure relief passage from behind the main oil pressure valve to the gear cavity on alternator crankcases.
- Crankshaft and main bearings supply passage on generator crankcases.
- Crankshaft and main bearings supply passage on early alternator crankcases.

S&S CRANKCASE OIL PASSAGE DRILLING JIG

Description	Part #
The S&S crankcase oil passage drilling jig is used to perform crankcase drilling modifications when installing an S&S oil pump assembly on early big twin crankcases. Made of hardened steel for durability, this fixture enables the builder to do four modifications.	**53-0013**

TAPPET BLOCK ALIGNMENT TOOL

- Aligns tappet block so the tappet rollers run straight on the cam lobe to prevent camshaft wear

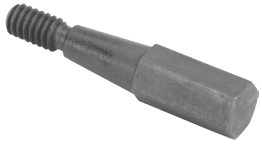

S&S® TAPPET BLOCK ALIGNMENT TOOL

Description	Part #
Tool, Tappet Guide, Alignment	**530-0014**

S&S® OIL

FEATURES AND BENEFITS

- Ultimate protection
- Superior lubrication for reduced engine wear and lower oil temperatures
- Provides consistent viscosity, and resists thermal breakdown and oxidation at elevated temperatures
- Includes a oil drain plug oring for convenience



S&S® OIL CHANGE KIT

Description	Part #
Harley-Davidson® big twin & Sportster® Models with Evolution® engines *(using OEM filter #63796-77A,63806-83, 63805-80A)* 4 quarts of SAE 20W-50 Synthetic Engine Oil with chrome oil filter	**3601-0412**
Harley-Davidson® Twin Cam 88®/96™/103™/110™ engines *(using OEM filter #63798-99, 63731-99A)* 4 quarts of SAE 20W-50 Synthetic Engine Oil with chrome oil filter	**3601-0413**
2017-2019 Harley-Davidson® Models with Milwaukee-Eight® engine 5 quarts of SAE 20W-50 Synthetic Engine Oil with chrome oil filter	**3601-0492**

S&S® OIL

Description	Part #
20W50 Synthetic, 1 quart	**3601-0407**
20W50 Synthetic, 2.5 Gallon	**3601-0408**
Primary, Synthetic, 1 quart	**3603-0044**
80W140 Gear, Synthetic, 1 quart	**3604-0007**
Chain/Gear, Synthetic, 1 quart	**3604-0008**

OIL FILTERS

FEATURES AND BENEFITS

- Captures smaller particles than stock filters
- Low restriction to oil flow
- Direct bypass —bypass oil does not pass over dirty filter media
- Smaller diameter for easier installation
- Black or chrome finish



S&S® OIL FILTERS

Year Application	Micron Rating	QTY	Chrome	Black
1984–'99 Evolution®, 1986–'17 XL and 1991–'02 Buell®	30µ	*each*	**31-4102A** *63796-77A*	**31-4101A** *63805-80A*
		12 pack	**310-0240**	**310-0239**
1999–'17* Twin Cam 88®/96™/103™ and all X-Wedge®	10µ	*each*	**31-4104A** *63798-99A*	**31-4103A** *63731-99A*
		12 pack	**310-0242**	**310-0241**

**Contains an anti-drain back valve*

CHAMPION® SPARK PLUGS



55-1322

CHAMPION® SPARK PLUGS

Application	Size	QTY	Part #
Twin Cam 88®/96™/103™, Sportster®, X-Wedge® & S&S 4⅛" bore engines	12mm Long Reach *Champion® #RA8HC*	*each*	**55-1320** *32317-86A, 32362-04*
		2 pack	**55-1322** *32317-86A, 32362-04*
Evolution®, Vintage Models (SH-Series, Iron XL, KN-Series, P-Series) & S&S 3⅜" & 4" bore engines	14mm Long Reach *Champion® #RN12YC*	*each*	**55-1321** *32342-04, 32311-83*
		2 pack	**55-1323** *32342-04, 32311-83*

JETS & CARB REBUILD KITS
FOR S&S SUPER E & G CARBURETORS

For those who need to rejet their carburetor because of engine modifications, exhaust modifications, or changes in altitude, we have extra jet kits available which are designed to cover most jetting situations.

DEALER JET KITS±

Description	Part #
S&S Carb Parts Kit *(Contains needed parts to maintain S&S Super E and G carburetors)*	**11-3103**
S&S Jet Kit *(Includes 3 each of all intermediate jets and 5 each of all main jets, plus a main jet tool)*	**11-3102**

± ⚠ WARNING: Cancer and Reproductive Harm – www.P65Warnings.ca.gov



11-3103±

JET PACKS±

Description	Part #
Low Range Jet Pack – For jetting most stock and moderate performance engines.	
Includes one each intermediate jets (.025", .0265", .028", .0295") one each main jets (.062", .064", .066", .068", .070", .072", .074").	**11-7270**
High Range Jet Pack – For jetting some stock and all performance engines.	
Includes one each intermediate jets (.0295", .031", .032", .033") and one each main jets (.072", .074", .076", .078", .080", .082", .084").	**11-7271**
Master Jet Pack – For jetting all Super B, E, and G equipped engines.	
Includes one each intermediate jets (.025", .0265", .028", .0295", .031", .032", .033") and one each main jets (.062", .064", .066", .068", .070", .072", .074", .076", .078", .080", .082", .084").	**11-7272**

± ⚠ WARNING: Cancer and Reproductive Harm – www.P65Warnings.ca.gov



11-3102±



11-7272±

INTERMEDIATE JETS - SERIES #94 INDIVIDUAL SELECTION±

Size	QTY	Part #	Size	QTY	Part #
.025	each	**11-0250**	.032	each	**11-0320**
	3 pack	**11-7107**		3 pack	**11-7112**
.0265	each	**11-0265**	.033	each	**11-0330**
	3 pack	**11-7108**		3 pack	**11-7113**
.028	each	**11-0280**	.036	each	**11-0360**
	3 pack	**11-7109**		3 pack	**11-7114**
.0295	each	**11-0295**	.040	each	**11-0400**
	3 pack	**11-7110**		3 pack	**11-7115**
.031	each	**11-0310**	Blank	each	**11-0000**
	3 pack	**11-7111**			

± ⚠ WARNING: Cancer and Reproductive Harm – www.P65Warnings.ca.gov



106-3517±

Early Series #94 gas jets were stamped with single digit numbers. Conversions for these numbers are:

1.....025"
2.....028"
3.....031"
4.....033"
5.....036"
6.....040"

NOTES

No returns or exchanges on jets.

MAIN JETS - SERIES #72 INDIVIDUAL SIZE SELECTION±

Size	QTY	Part #	Size	QTY	Part #
.040	each	11-4040	.080	each	11-4080
	5 pack	11-7220		5 pack	11-7240
.042	each	11-4042	.082	each	11-4082
	5 pack	11-7221		5 pack	11-7241
.044	each	11-4044	.084	each	11-4084
	5 pack	11-7222		5 pack	11-7242
.046	each	11-4046	.086	each	11-4086
	5 pack	11-7223		5 pack	11-7243
.048	each	11-4048	.088	each	11-4088
	5 pack	11-7224		5 pack	11-7244
.050	each	11-4050	.090	each	11-4090
	5 pack	11-7225		5 pack	11-7245
.052	each	11-4052	.092	each	11-4092
	5 pack	11-7226		5 pack	11-7246
.054	each	11-4054	.094	each	11-4094
	5 pack	11-7227		5 pack	11-7247
.056	each	11-4056	.096	each	11-4096
	5 pack	11-7228		5 pack	11-7248
.058	each	11-4058	.098	each	11-4098
	5 pack	11-7229		5 pack	11-7249
.060	each	11-4060	.100	each	11-4100
	5 pack	11-7230		5 pack	11-7250
.062	each	11-4062	.102	each	11-4102
	5 pack	11-7231		5 pack	11-7251
.064	each	11-4064	.104	each	11-4104
	5 pack	11-7232		5 pack	11-7252
.066	each	11-4066	.106	each	11-4106
	5 pack	11-7233			
.068	each	11-4068	.110	each	11-4110
	5 pack	11-7234		5 pack	11-7255
.070	each	11-4070	.115	each	11-4115
	5 pack	11-7235		5 pack	11-7256
.072	each	11-4072	.120	each	11-4120
	5 pack	11-7236		5 pack	11-7257
.074	each	11-4074			
	5 pack	11-7237			
.076	each	11-4076			
	5 pack	11-7238			
.078	each	11-4078			
	5 pack	11-7239			

±⚠WARNING: Cancer and Reproductive Harm – www.P65Warnings.ca.gov

MAIN JET AIR BLEED KIT± (One Jet Each Size)

Sizes	Part #
.042" - .060"	106-3517
.084" - .120"	106-3518

±⚠WARNING: Cancer and Reproductive Harm – www.P65Warnings.ca.gov



190-0005±

S&S® CARBURETOR REBUILD KITS

To insure that you continue to get the utmost in performance from your S&S carburetor, we have put together a series of rebuild kits that are designed to provide the proper parts to return a worn carburetor to top shape. We have assembled different types of kits to cover the different degrees of rebuild necessary.

MASTER REBUILD KITS

Master rebuild kits contain a body rebuild kit, accelerator pump rebuild kit (Super E and G only), all new fasteners, springs, idle mixture screw, seat, and needle assembly. Everything needed to completely rebuild one carburetor.

MASTER REBUILD KIT±

Description	Part #
Super E	11-2923
Super G	11-2924

±⚠WARNING: Cancer and Reproductive Harm – www.P65Warnings.ca.gov

BODY REBUILD KITS

Body rebuild kits for Super E and G carbs also contain throttle shaft nuts, nylon washers, accelerator pump o-ring, and accelerator pump boot. Body rebuild kits for Super E and G carbs do not contain throttle shaft bushings since these carbs have stainless steel throttle shaft bushings already installed.

BODY REBUILD KIT±

Description	Part #
Super E	11-2906
Super G	11-2907



±⚠WARNING: Cancer and Reproductive Harm – www.P65Warnings.ca.gov

BASIC REBUILD KIT

A gasket and seal kit for low mileage Super E & G carbs. Perfect to reassemble carbs taken apart for inspection and cleaning.

BASIC REBUILD KIT±

Description	Part #
Super E & G	110-0067

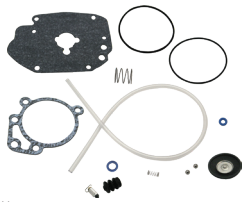

±⚠WARNING: Cancer and Reproductive Harm – www.P65Warnings.ca.gov

ACCELERATOR PUMP REBUILD KITS

Accelerator pump rebuild kits contain diaphragm, diaphragm spring, check balls, check ball spring, pump pushrod, and required hardware and o-rings.

ACCELERATOR PUMP REBUILD KIT

Description	Part #
Super E & G	11-2918



FUEL LINE KIT

Fuel Line Kit for Super E and G Carburetors p/n 190-0005±

FUEL LINE KIT

Description	Part #
Fuel Line, Kit, Carb, Super E/G, Swivel Retrofit	190-0005±
Fuel Line,.311" x .563" x 17.5",SAE 30R14 *(replacement fuel line only)*	190-0001

±⚠WARNING: Cancer and Reproductive Harm – www.P65Warnings.ca.gov

TOUCH UP PAINT, LUBRICANT AND SEALANTS



106-3023



51-9000



51-9009



51-9002



500-0143

TOUCH UP PAINT

Description	Part #
S&S touch up paint is included with each powdercoated S&S engine, but it's handy to have a spare! Keep one in the shop and one in your saddle bag. Sold in ½ oz. bottles with applicator cap.	
Wrinkle Black ½ oz, matte finish (used after April 2009)*	**510-0053**
Silver ½ oz	**106-3023**
Stone Gray ½ oz	**510-0350**
**NOTE: Wrinkle Black (51-9001) has a slightly glossy finish. Wrinkle Black (510-0053) has a matte finish with no gloss.*	

LUBRICANT AND SEALANTS

Use what the pros use! S&S assembles a lot of engines and customers often ask what sealants and lubricants we use. We recommend and use the following:

Torco® Engine Assembly Lube	
Protect engine components during assembly and initial start up!	
4 oz. Bottle	**51-9000**
1 oz. Tube	**51-9002**
Gasgacinch® Gasket Sealer	
4 oz. (118ml) Can	**51-9009**
ThreeBond® Liquid Gasket 1194	
Great for sealing crankcases! 3.5 oz. (100g) Tube	**500-0143**

ENGINE STANDS

- An economical way to hold an engine on the work bench, for shipping, or for display
- Constructed of heavy gauge stamped steel with "S&S" laser cut in both ends
- Bullet proof, blue powder coat finish gives the stands a professional appearance that is suitable for display and protects them from corrosion and minor abrasions



S&S® ENGINE STANDS

Application	Part #
S&S X-Wedge® Engines	**53-0147**
1936–'99 Big Twin Engines	**53-0141**
1999–Up Unbalanced Big Twin Engines	**53-0143**
1999–'06 Balanced Big Twin Engines	**53-0145**

DEALER SERVICE KIT FOR STREET LEGAL EXHAUST



DEALER SERVICE KIT ..... **510-0684**.....*$28.67*

(Includes S&S proprietary tamper-proof bit ***(available only to dealers)*** and spare fasteners. Provides everything necessary to perform any required service or end cap replacement.)

WARRANTY & COMPANY POLICY

Limited Warranty 338

MAP Policy 335

Ordering and Returns 336

S&S Video
Usage Policy 340

Warranty Service 337

S&S® CYCLE, INC.
14025 CTY HWY G, VIOLA, WI 54664
608-627-1497
SSCUST@SSCYCLE.COM
SSCYCLE.COM

PUT YOUR CUSTOMER NUMBER HERE:

DISCLAIMER

The names Harley®, Harley-Davidson®, H-D® and all trademarks owned by Harley-Davidson and its affiliated companies, and all H-D and Buell® part numbers and model designations are used for reference only. S&S Cycle is in no way associated with or authorized by Harley-Davidson Motor Co. to manufacture and sell any of the engine parts described in this catalog. The installation of any S&S part may void or otherwise adversely affect your factory warranty. In addition, such installation and use may violate certain federal, state and local laws, rules and ordinances as well as other laws when used on motor vehicles operated on public highways, especially in states where pollution laws may apply.

Always check federal, state, and local laws before modifying your motorcycle.

It is the sole and exclusive responsibility of the user to determine the suitability of the product for his or her use, and the user shall assume all legal, personal injury risk, and liability and all other obligations, duties and risks associated therewith. S&S parts are intended for the very experienced off-road rider only.

SALES

S&S parts are obtainable from many distributors and dealerships throughout the world. Please reference our Dealer Locator on the S&S website for an authorized Dealer near you.

In order to receive dealer prices, new customers must complete a Dealer Application through the S&S Customer Support Department.

In order to receive distributor prices, new customers must provide, in addition to all of the dealer requirements listed above, a copy of your dealer catalog and dealer price list for consideration. It is left to S&S' sole discretion as to whom it allows to distribute S&S products.

NOTE: Distributors are authorized to sell to dealers only. Retail sales are prohibited.

TERMS

S&S accepts Visa, MasterCard, and American Express

New Dealers and Distributors: For a period of six months following the acceptance of a completed Customer Application form, component orders for all new S&S customers shipped in the continental United States and abroad will be sent prepaid.

Existing Dealers and Distributors: After six months as an S&S customer, dealers and distributors with a satisfactory payment and performance history may request an open account status from their Customer Support representative.

International: Any orders from outside the United States must be prepaid in United States funds. Freight charges may be prepaid by the customer or order may be shipped freight collect.

Telephone orders will be handled according to customer terms.

Individuals: S&S recommends that parts are purchased through a dealer; However, S&S will ship parts order to a retail customer if desired.

Service Charges: S&S reserves the right to levy additional charges under the following circumstances:

Insufficient Funds: Any customer that has a check returned to S&S for lack of funds will be charged $35.00 and will be immediately placed on pre-paid status.

Past Due: Any account that is 30 days past due will be assessed a charge of 1.5% on the balance due for each month the account is in arrears. The account will be put on hold until all past due amount is paid. Customer will then be put on prepaid and can reapply for terms.

Duplicate Manufacturer's Statement of Origin (MSO): Any customer requesting a duplicate MSO will be charged $60.00 for each separate MSO required. Please be aware that a sworn affidavit must be completed and submitted to S&S before the duplicate MSO can be prepared.

MINIMUM ADVERTISED PRICE (MAP) POLICY

S&S Cycle will issue printed price lists indicating Manufacturer's Suggested Retail Pricing (MSRP) and maintain a current listing with effective date of MSRP on its Internet website which can be amended at any time by S&S Cycle at its sole discretion. Any priced advertisement in any media such as but not limited to Internet or similar electronic media, radio, television, flyers, posters, catalogs, mail order catalogs, magazines, e-mail newsletters, e-mail solicitations, coupons, mailers, inserts, newspapers, and public signage must be not less than 10% below the current MSRP as indicated on the printed price list or S&S website. Any pricing advertised that is greater than 10% below that shown on the current printed price list or MSRP list on the S&S Cycle website will be a violation of this MAP policy and subject to enforcement procedures as identified later in this document.

Sales of any S&S products listed on the current price list through third party retailing (such as eBay and Amazon) is allowed providing the listed price is less than 10% below MSRP.

This MAP Policy applies only to advertised prices and does not apply to the actual price that S&S Cycle products are sold or offered for sale to an individual consumer within Reseller's location or over the telephone. Resellers are free to sell S&S Cycle products at any price they choose under these circumstances.

The inclusion in advertising of any free or discounted products with a product covered by this MAP Policy would be contrary to this MAP Policy if it has the effect of discounting the advertised price of the included S&S Cycle product below current MSRP as indicated on the S&S Cycle Internet website or printed price list.

This MAP Policy does not establish maximum advertised prices. Resellers may offer S&S Cycle products at any price in excess of current MSRP.

Pricing listed on an Internet site is considered an "advertised price" and must adhere to this MAP Policy. Once the pricing is associated with an intent to purchase (adding to shopping cart or order), the price becomes the selling price and is not bound by this MAP Policy. Statements such as "add to basket to see price," "we will match any price," "call for price" or similar phrases are acceptable as long as the price advertised or listed for the products is less than 10% below current MSRP. In addition, discounts applied at checkout to the customer's entire order based on customers purchasing history with the Reseller, such as discounts for "frequent shoppers," do not violate this MAP Policy.

S&S Cycle reserves the right to offer promotions on certain products. In such an event, we reserve the right to modify or suspend this MAP Policy in whole or in part by notifying all Resellers of the nature and duration of the change. S&S Cycle further reserves the right to adjust the MSRP with respect to all or certain products at its sole discretion. Such changes shall apply equally to all resellers.

ENFORCEMENT PROCEDURES:

S&S has included its MAP Policy Enforcement Procedures in the Dealer Agreement to ensure all dealers signing the "acknowledgement" page are aware of the severity in which S&S will deal with violators of this policy. Any determinations by S&S under these enforcement procedures shall be binding upon the violator.

FIRST OFFENSE:

Dealer will receive notification of the nature of the violation and will be given thirty (30) calendar days to remove the offending print advertisements from publication and distribution and three (3) business days to remove any offending electronic advertisements from web pages, Internet sites, or other electronic media.

SECOND OFFENSE:

Dealer will receive a notification and the account will be placed on a non-ship basis for thirty (30) days from the date of notice.

THIRD OFFENSE:

Dealer will receive a notification and the account will be placed on a non-ship basis for sixty (60) days from the date of notice.

FOURTH OFFENSE:

Dealer will receive a notification and the account will be placed on a non-ship basis indefinitely.

The administration of this MAP Policy and any determinations made under it are solely within S&S Cycle's discretion and authority. All questions about this MAP Policy should be in writing and directed via U.S. Mail to the Vice President of Marketing, S&S Cycle Inc, 14025 County Highway G, Viola WI 54664. This policy is subject to change at S&S' sole discretion.

ORDERING AND RETURN POLICY

ORDERING

Orders may be placed online or by telephone or email. Special forms for written orders are not necessary. Special order parts will require payment in full by credit card or wire transfer before the order is placed, and in most cases a special order form is also required. S&S® requires specific information when ordering parts. Refer to the appropriate section of the catalog that contains the parts you want to order for the required information.

HOW TO ORDER

Written orders should be mailed to:

S&S Cycle, Inc.
Customer Support Representative
14025 Cty. Hwy. G
Viola, WI 54664

Fax orders should be sent to: 608-627-1488

Email orders should be sent to your Customer Support Representative.

When placing an order by letter, fax, or email, please include the following information:

1. First and Last Name
2. Customer Number
3. Company Name
4. Street Address, City, State, and Zip Code
   (UPS will not deliver to a post office box.)
5. Phone Number where you can be reached between 8:00A.M. and 5:00P.M. Central Standard Time.
6. Shipping Preference. Customer must specify the method of shipment e.g. UPS one-day air, UPS two-day air, UPS ground, Federal Express, Truck, or U.S. Mail
   NOTE: S&S ships most domestic and international orders via UPS
7. Year and model of motorcycle for each kit ordered
8. Information that is helpful in establishing the correct S&S part has been ordered. Examples of information to include are: engine displacement, bore and stroke, cylinder height, and existing modifications to the motor
9. S&S part number and quantities required
   NOTE: The customer is responsible for determining & ordering the appropriate part number
10. Deposit applies only to individual customers or orders for special parts

HOW TO ORDER BY PHONE

When placing an order by phone please provide the information below:

1. Customer Number
2. Name of person placing the order
3. Company Name
4. Street Address, City, State, and Zip Code. For dealers and distributors, S&S Customer Support Representative will verify current address against our computer listing each time an order is placed
5. Shipping Preference. Customer will be asked to determine the method of shipment e.g. UPS one-day air, UPS two-day air, UPS ground, Federal Express, Truck, or U.S. Mail

NOTE: S&S ships most domestic and international orders via UPS

6. S&S part numbers and quantities required. NOTE: The customer is responsible for determining and ordering the appropriate part number
7. Information that is helpful in establishing the correct S&S part has been ordered. Examples of information to have available include: engine displacement, bore and stroke, cylinder height, and existing motor modifications

BACKORDERS

Through continual expansion of equipment and facilities, S&S is making an ongoing effort to improve parts availability, however, backorders cannot always be avoided.

Items not in stock at the time the initial order is shipped will be backordered.

During the backorder period if the customer decides the parts are no longer needed, it is the customer's responsibility to notify S&S that the order should be cancelled.

Shipping charges and restocking fees will be applied to any backorders that are refused in the same way they are applied to other orders that are refused.

REFUSED SHIPMENTS

Orders that are refused or returned to S&S® for reasons such as insufficient funds or having no one available when the shipment is delivered are subject to a 20% restocking fee plus any shipping. The customer will then be put on Pre-Pay status and remain there for a minimum of 6 months.

SPECIAL ORDERS

All special order parts must be paid for in-full when the order is placed. In addition, the customer must complete special order sheet and sign a copy of the sales order to verify that the specifications are correct. The order may not be cancelled. Special order parts are not returnable. *NOTE: Distributors of S&S Cycle, Inc. are not authorized to order Special Order items as this is a Race and Dealer only program.

RETURNS

Shipments must be inspected by the customer immediately upon receipt to insure they are complete and undamaged. If damaged parts are discovered, an immediate claim must be made with the carrier. S&S must be notified within five (5) working days of the receipt of a shipment that has been determined to have shortages or contain incorrect or defective parts. It is advisable to phone S&S as soon as possible as issues can frequently be resolved more quickly over the phone.

The following requirements must be satisfied to receive credit, a refund, or to exchange merchandise.

1. Call S&S to obtain a Return Authorization (RA) number before the parts are returned. The RA number must be visible and clearly written on the container.
2. Return the parts to S&S within 10 days.
3. Package the parts to prevent any damage occurring during shipping. If parts being returned to S&S are damaged in transit because of inadequate packaging, they will be returned to the customer at the customer's expense. Repackaging parts using S&S containers does not always ensure the items are packaged properly. S&S original containers may be reused but good judgment must be applied to determine if additional protection is required.
4. All returns must be sent to S&S insured and prepaid. No CODs will be accepted.
5. All returns must be accompanied by a copy of the original invoice of purchase and a note explaining in sufficient detail the reason for the return. The Return Authorization number must be visible and clearly written on the container and the explanatory note.
6. Under no circumstances are damaged, altered, rusty, used or otherwise un-saleable parts eligible to be returned for credit. S&S will not issue an RA number for anything altered, used, unpackaged or deemed obsolete by S&S.

Upon acceptance of the returned parts by S&S under the requirements described above, the customer will be charged a minimum restocking fee equal to 20% of the total value of the parts.

ALL RETURNS MUST BE SHIPPED TO:

S&S® Cycle Inc.
14025 Cty Hwy G
Viola, Wisconsin 54664

SHIPPING

Domestic: S&S will ship most orders via UPS ground and will do so unless the customer requests another method. S&S will not ship by bus line but will ship via Federal Express or Truck at the customer's request.

Pre-Paid Shipping: Pre-payment of shipping charges by dealer allows them to receive S&S shipping rates, resulting in significant savings.

International: Due to high shipping and customs costs, it is recommended that International customers advise S&S of the carrier to be used, especially for a large order.

Orders that must be received quickly can be shipped by UPS-Waybill (three to four-day service) or UPS-Expedite (five to six-day service).

OBTAINING WARRANTY SERVICE

WHAT ARE THE PROCEDURES TO OBTAIN SERVICE UNDER THIS WARRANTY?

To obtain service under this warranty, the original Consumer Purchaser should immediately contact the dealer where the Engine was purchased. The dealer will then contact S&S® Cycle, Incorporated (the "Company") for a determination as to whether the defect in the Engine or part is covered by this warranty.

THE DEALER OR SERVICE PROVIDER MUST RECEIVE AUTHORIZATION FROM THE COMPANY BEFORE PROVIDING SERVICE UNDER THIS WARRANTY.

In the event that the Company determines the Engine or part must be returned to the Company for evaluation or service, the Company will provide the dealer with a Return Authorization Number to put on the shipping container for identification.

The original Consumer Purchaser or dealer must clean and properly package the Engine or part so as not to cause further damage and return the Engine or part, shipping costs prepaid, to the Company. The Return Authorization Number must be clearly visible on the outside of the shipping container. If the Engine or part must be cleaned prior to warranty inspection the cost of cleaning will be charged to the original Consumer Purchaser or dealer.

The original Consumer Purchaser or dealer must also send to the Company a detailed explanation of the relevant facts concerning the nature of the problem, the specific use of the Engine, and the circumstances giving rise to the defect or problem.

If it is not practicable to contact the dealer for warranty service, the original Consumer Purchaser may contact the Company at the following address, telephone number, fax number or e-mail address:

S&S® Cycle, Incorporated
Attention: Customer Support
14025 Cty Hwy G
Viola, Wisconsin 54664
Phone: 608-627-1497 Email: sstech@sscycle.com

HOW DO STATE LAWS RELATE TO THIS WARRANTY?

This warranty gives you specific legal rights. You may also have other rights that vary from state to state.

ARE THERE OTHER WARRANTIES?

THE WARRANTIES STATED IN THIS WARRANTY REPLACE ALL OTHER WARRANTIES, EXPRESS OR IMPLIED, INCLUDING WITHOUT LIMITATION, THOSE OF MERCHANTABILITY AND FITNESS FOR A PARTICULAR PURPOSE, AND ANY OTHER OBLIGATIONS OR LIABILITIES ON THE PART OF THE COMPANY WHETHER IN CONTRACT, WARRANTY, NEGLIGENCE OR OTHERWISE, TO THE EXTENT NOT PROHIBITED BY LAW.

Some states do not allow limitations on how long an implied warranty lasts, so the above limitation may not apply to you.

WHAT MUST THE ORIGINAL CONSUMER PURCHASER DO TO QUALIFY FOR WARRANTY COVERAGE?

Within thirty (30) days after the date of purchase of the Engine, the selling Dealer or Consumer Purchaser must return the completed Warranty Registration Form (included with the engine shipment), along with a copy of the invoice, evidencing such purchase to the Company. Upon receipt of the Owner's Warranty Card Registration Form by the Company, the M50 will be sent to the selling Dealer by the Company. The selling Dealer is responsible for forwarding the original M50 to the Consumer Purchaser. The Owner's Warranty Card will be sent by The Company to the Consumer Purchaser based on the information completed by the Selling Dealer within the returned Owner's Warranty Card Registration Form. The Owner's Warranty Card Registration Form should be returned to the Company at the following address by the selling Dealer:

S&S® Cycle, Incorporated
Attention: Customer Support
14025 Cty Hwy G
Viola, Wisconsin 54664
Phone: 608-627-1497 Email: sstech@sscycle.com

THIS WARRANTY IS VOIDABLE AT THE COMPANY'S OPTION IF THE ORIGINAL SELLING DEALER DOES NOT RETURN TO THE COMPANY THE WARRANTY REGISTRATION FORM AND A COPY OF THE INVOICE WITHIN THIRTY (30) DAYS FROM THE DATE OF PURCHASE OF THE ENGINE.

LIMITED WARRANTY
FOR COMPLETE FACTORY-ASSEMBLED ENGINES

LIMITED WARRANTY

S&S Cycle, Inc. (the "Company") warrants to the original purchaser that each new product manufactured and assembled by the Company will be free, under normal use and maintenance, from significant manufacturing defects in materials and workmanship for two (2) years (KN and T143 Engines one (1) year limited warranty. SB100 engines are one (1) year parts only), subject to the following exceptions, exclusions, obligations, and limitations. All warranty periods shall begin from the date of purchase by the original retail customer or one year from date of manufacture, whichever comes first.

Exceptions/Exclusions

The foregoing limited warranty is not assignable or transferrable and shall not apply: (1) to any engine, part, or component that is used for other than the intended commercial purpose (including, without limitation, any racing or similar competitive activities or where competition applications, such as a turbocharger, supercharger, or nitrous oxide is used with the engine); (2) where the engine, part, or component has been subject to misuse, negligent use or maintenance, improper storage or shipping, old or contaminated fuel left within the fuel systems, operation without adequate cooling or lubricants, or a failure to operate or maintain in accordance with the specifications published by the Company; (3) where the engine, part, or component has been involved in an accident, or has been altered in any way which, in the sole judgment of the Company, adversely affects performance, safety, structural integrity, or reliability; (4) to any engine, part, or component manufactured or furnished by a third party; (5) where any engine, part, or component is (i) assembled by the Company in accordance with the purchaser's specifications or (ii) used in conjunction with or otherwise attached to a part or component manufactured by a third party and with respect to which the Company has not pre-tested and approved the structural integrity, application, and use of such fully-assembled product; (6) to defects or damage caused by the user failing to cease operation of the engine, part, or component as soon as the defect is identified or suspected, or where the engine, part, or component has been used in vehicles for demonstration or development purposes; or (7) to normal wear and tear or to parts or components consumed/expended in the normal operation of the engine (including, without limitation, oil, fuel, spark plugs, lubricants, oil filters, air filters, or fuel filters). This limited warranty shall not apply to any defects in the engine, part, or components powder coat or chrome finish, when that option is selected, if the defects arise from or are caused by negligence of parties other than the Company, an accident, ordinary wear and tear, assembly or disassembly, power washing, natural occurrences (such as stone chips or salt and other substances used on streets and highways), bead blasting, improper maintenance including the use of any harsh cleaning agent, chemical solvent, or solvent. This limited warranty does not cover inconvenience or loss of use of the engine, part, or component, routine maintenance services or adjustments, or the cost of labor to remove, install, or service the engine, part, or component or any part contained therein. This limited warranty covers engine, part, or component and/or workmanship issues only, and not the equipment to which the engine, part, or component may be mounted or attached.

REMEDIES

As to valid warranty claims against the Company, the original purchaser's sole and exclusive remedy, and the Company's sole and exclusive obligation under this limited warranty, shall be, at the Company's option, replacement or repair of such defective engine, part, or component. The original purchaser shall notify the Company within ten (10) days after discovery of the alleged defect specifying in detail the nature of the defect. Failure to provide written notice within the ten (10) day period shall constitute a waiver of such warranty claim. Where warranty rights are claimed, all goods claimed to be defective shall be delivered to the Company with transportation charges prepaid, and the original purchaser's copy of the original invoice must be provided to the Company as evidence of the date of purchase.

DISCLAIMER/LIMITATION OF LIABILITY

EXCEPT AS SPECIFICALLY SET FORTH ABOVE, NO EXPRESS WARRANTY IS GIVEN BY THE COMPANY WITH RESPECT TO ANY ENGINES, PARTS, OR COMPONENTS. ANY WARRANTY IMPLIED BY LAW, INCLUDING ANY WARRANTY OF MERCHANTABILITY OR FITNESS FOR A PARTICULAR PURPOSE, IS EXPRESSLY LIMITED TO THE DURATION OF THE LIMITED WARRANTY SET FORTH ABOVE. THE COMPANY MAKES NO OTHER EXPRESS WARRANTY. THE COMPANY SHALL NOT BE LIABLE FOR ANY SPECIAL, INDIRECT, INCIDENTAL, OR CONSEQUENTIAL DAMAGES OF ANY KIND OR NATURE.

Some states and countries do not allow limitations on how long an implied warranty lasts, or the exclusion or limitation of incidental or consequential damages, so the above limitation or exclusion may not apply to you, and you may have other rights which vary from state to state.

LIMITED WARRANTY STANDARD PARTS

WHO IS COVERED BY THIS WARRANTY?

This warranty covers only the original Consumer Purchaser of these parts and is not transferable.

WHAT DOES THIS WARRANTY COVER?

S&S® Cycle, Incorporated (the "Company") warrants these parts to be free from defects in material and workmanship. If the parts become defective during the warranty coverage period, the Company will, at its option, repair or replace any, or all, defective parts. Repair or replacement of defective parts is the sole and exclusive remedy.

HOW LONG IS THE WARRANTY COVERAGE?

With the exception of electrical and electronic components, the warranty coverage remains in force for a period of twelve (12) months from the date that the original Consumer Purchaser buys the parts. Electrical and electronic components are covered by a warranty duration of six (6) months. However, warranty coverage will automatically terminate if the original Purchaser sells or otherwise transfers all or any portion of the purchased parts.

WHAT IS NOT COVERED BY THIS WARRANTY?

The Company shall not pay or be responsible for the cost of shipping the defective parts to the Company for service under this warranty, nor will the Company pay for the cost of labor to remove and/or replace the defective parts.

Moreover, the Company shall have no obligation under this warranty in the event that the parts become defective in whole or in part as a result of improper assembly, installation, break-in, maintenance, or use, or any other misuse or mistreatment of the parts, including, without limitation, operation of the parts with fuels, oils or lubricants not conforming to specifications published by the Company or continued operation of the parts after a defect or malfunction occurs or is identified or suspected.

The Company shall have no obligation under this warranty for defects in parts with a powdercoat finish, when that option is selected, if the defects are caused by, but not limited to, negligence of parties other than the Company; an accident; ordinary wear and tear; assembly or disassembly; power washing; natural occurrences like stone chips; bead blasting; improper maintenance including the use of any harsh cleaning agent, chemical or solvent; and salt or other substances used on streets and highways for maintenance and safety.

The Company provides touch-up paint with powdercoated parts. It is the customer's responsibility to repair minor finish damage to prevent or inhibit further deterioration.

It is the responsibility of the original Consumer Purchaser to cease operation as soon as a defect or malfunction is identified or suspected. The failure to cease operation once a defect or malfunction exists can cause substantial damage to the Company's parts that could otherwise be avoided.

In addition, the Company shall have no obligation under this warranty for parts defects caused by alteration including, but not limited to, polishing; powdercoating; painting; removing or reconfiguring any components; modification, repair, or unauthorized service.

The Company shall have no obligation under this warranty if the parts are used in racing or similar competitive activities. The Company shall have no obligation under this warranty when a competition application, including but not limited to a turbocharger, supercharger or nitrous oxide, is used with the Engine. Further, the Company shall have no obligation under this warranty for any parts that are included in a Competition Package Option offered by the Company since the Package is for use in racing and similar competitive activities.

THE COMPANY SHALL NOT BE LIABLE FOR AND DISCLAIMS ALL CONSEQUENTIAL, INCIDENTAL, PUNITIVE OR SPECIAL DAMAGES ARISING OUT OF THE USE OF, OR INABILITY TO USE, THESE PARTS.

Some states do not allow the exclusion or limitation of incidental or consequential damages, so the above exclusion may not apply to you.

VIDEO USAGE POLICY

OVERVIEW

S&S owns all copyright and other intellectual property rights in the videos it produces or distributes. However, S&S customers are welcome to use and share S&S videos within these guidelines provided.

PERMISSIBLE USES

- Videos may only be used for non-commercial purposes or to promote the use or sale of S&S products.
- Videos may be embedded in external websites using video hosting service supplied embed (iframe) code.
- Videos can be added to a customer video hosting service account via playlists while still maintaining original exclusivity of uploaded videos by S&S.
- Reposting or uploading of S&S content is only permissible with written consent from S&S Cycle.
  - If consent is granted to repost/re-upload S&S content, customers may add annotations using functionality provided by video hosting services. This may include the customer's contact and ordering information which would be subject to approval by S&S to ensure branding is intact, prior to making it public. The video itself must remain unaltered.
  - S&S requires that at the beginning of each month, a report of view statistics per video be supplied to S&S.
- Links (url) to S&S YouTube channel or individual YouTube videos may be provided and shared by the customer via email, blog, website, social networks, or printed material.

NON PERMISSIBLE USES

- Customers may not upload or repost any copyrighted materials owned by S&S to another video hosting service account or any website without written consent from S&S.
- Customers may not alter or modify any copyrighted materials owned by S&S.
- Videos may not be used in any way that is likely to disparage, dilute, tarnish, or otherwise harm the S&S brand.

TERMINATION OF LICENSE

Through this Video Usage Policy, S&S is granting its customers a limited, revocable license to display or link to its videos. S&S may, at any time, and at its sole discretion, terminate this license, at which point any copying or display of its videos will be prohibited, unless otherwise specified in writing.

APPENDIX & INDEX



Appendix

Identification of flywheels 342
Ordering S&S Manifolds 343
Year codes 344
Custom head bolt length 345

Index.....346

IDENTIFICATION OF FLYWHEELS

S&S® flywheels are manufactured in sets only We do not sell individual right or left flywheels, nor do we recommend mixing flywheels This is because the manufacturing techniques and/or tooling changes periodically

To prevent mixing flywheels, as well as to identify each set, the right and left flywheels are stamped with identical serial numbers (see picture).



Serial Number Identification Information

Serial Number ID, B01810-3SLX , deciphered as follows:

(B01810) Serial Number: From this number, S&S can determine when the flywheels were made and sold, to whom they were sold, and how the flywheels were originally balanced

(3) Stroke Code: Determines the stroke of the flywheels In this case the stroke is 4¾"

(SL) Year Code: The year of the engine the flywheels were machined to fit and that the flywheels were machined to accept an S&S design sprocket shaft

(X) Diameter Code: Diameter of the flywheels In this case the diameter is 8¼"

S&S® FLYWHEEL IDENTIFICATION CODES FOR 1936–UP BIG TWIN

Stroke Code	Stroke	Year Code	Engine Year	Sprocket Shaft	Pinion Shaft	Crankpin Type	Diameter Code	Flywheel Diameter
1	4⅜"	E	1936–'54	Stock	Stock	1941–'81	None	8½" (Stock)
2	4½"	L	1955–'71	Stock	Stock	1941–'81	A	8⅜"
3	4¾"	AL	1972–Early '81	Stock	Stock	1941–'81	X	8¼"
4	5"	SE	1955–Early '81	S&S	Stock	1941–'81		
5	4¼" (Stock 80")	BL	Late 1981–'99	Stock	Stock	1981–'99		
6	4⅝"	SL	Late 1981–'99	S&S	Stock	1981–'99		
9	Special order	SF	1999–up	Press In	Press In	Press In		
12	5¼"	SG	S&S 4⅛" Bore	Press In	Press In	Press In		
13	3½" (Stock 61")	SM	1995–'99 EFI	Press In	S&S	1981–'99		
14	3³⁄₃₂" (Stock 74")	Y	74"/80" Indian®	Stock	Stock	Stock		
16	5⅛"							
17	4"							
18	3⅝"							
19	4⅛"							
TA	3⅞"	Titan Special						
TB	4450"							

FLYWHEEL CODES:

Codes that pertain to the most common regular production flywheels have been listed. Many other codes for racing flywheels and special orders also exist. If you have a question about a set of S&S flywheels with codes different than those shown, contact an S&S technical assistant to properly identify what you have.

Flywheel ID codes that end with an "A" or an "X" designate flywheels with a smaller than stock diameter. Stock big twin flywheels measure 8½", and stock flywheels for Harley-Davidson® Sportster® models are 7⅞" in diameter. Typically, "A" means ⅛" smaller, and "X" means ¼" smaller. To verify the code, it is best to measure the flywheels

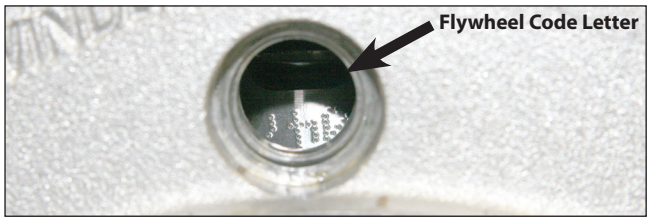

Serial numbers can be seen through the timing hole to identify the stroke of an assembled engine Keep in mind they will appear upside down in the hole

S&S® FLYWHEEL IDENTIFICATION CODES FOR HARLEY-DAVIDSON® SPORTSTER® & BUELL® MODELS

Stroke Code	Stroke	Year Code	Engine Year	Sprocket Shaft	Pinion Shaft	Crankpin Type	Rod Bearing Type	Diameter Code	Flywheel Diameter
1	4¹⁄₁₆"	None	1957–'76	Stock	Stock	Stock	Stock	None	7⅞" (Stock)
2	4³⁄₁₆"	B	1957–Early '81	Stock	Stock	Stock	Stock	A	7¾"
3	4⁵⁄₁₆"	SB	1957–Early '81	S&S	Stock	Stock	Stock	X	7⅝"
4	4⁷⁄₁₆"	BD	1957–Early '81	Stock		Stock	Stock		
6	4⅝"	SBD	1977–Early '81	S&S		Stock	Stock		
7	4¹³⁄₁₆"	C*	Late 1981–'85	Stock	Stock	Stock	Stock		
8	5"	SC	Late 1981–'85	S&S	Stock	Stock	Stock		
9	Special Order	SCD	Late 1981–'85	S&S		Stock	Stock		
11	4½"	SCR	Late 1981–'85	S&S	Stock	Stock	1987–Up		
12	5¼"	SCDR	Late 1981–'85	S&S		Stock	1987–Up		
15	3¹³⁄₁₆"	D	Late 1986–'03	S&S	S&S	S&S	S&S		
16	5⅛"	DR	Late 1986–'03	S&S	S&S	S&S	1987–Up		
17	4"	PS	S&S Prostock	Press In	Press In	Press In			
18	3⅝"	KRS	45" WR/KR	Stock	Stock	1957–'81 XL	1957–'81 XL		
19	4⅛"	YS	45" Indian	Stock	Stock	Stock	Stock		

** Obsolete – S&S no longer makes this design*

ORDERING S&S® MANIFOLDS

We make one style of manifolds for both Harley-Davidson® Evolution® and Twin Cam 88® engines to fit stock cylinder heads and S&S cylinder heads—meaning manifolds supplied in S&S carburetor kits can be used with stock or S&S Super Stock® cylinder heads. The only thing that you have to keep in mind is that due to the slightly larger port diameter, these manifolds must be used with S&S manifold seals.

Replacement & Special Order Intake Manifolds

Stock, S&S Engine or S&S Kit: To order a replacement manifold, refer to the manifold size chart for your particular engine type. Manifolds are listed for various sized carburetors and throttle bodies in the correct lengths for engines and kits offered by S&S .

Custom Engine: If the effective cylinder length is different from the standard offerings, a special manifold can be machined to your specifications. Order manifolds using the special order part numbers listed in the charts. Allow two weeks for delivery

Specifying Manifold Length

When ordering a special manifold, specify the length of the manifold required for your application. There are several methods to specify the length of a manifold:

Port-To-Port Distance: S&S Manifold Measuring Tools

The most accurate method for specifying length for a special order manifold:

- Use the S&S Manifold Measuring Tools to measure port-center to port-center distance on an engine or an existing manifold.
- Specify whether the measurement was from an engine or from an existing manifold. (Manifold measurements will be approximately 030" shorter than engine measurements due to clearance normally built into the manifold).

Port-To-Port Distance: Flange Method

Another accurate method of specifying manifold length for special order is to measure the port-to-port distance on an assembled or mock-up engine :

- Assemble or mock-up the engine & install the intake flanges on heads
- Scribe a circle around the port using the mounting flange as a template The circle must be the same size as the ID of the flange. (It is recommended that front flange be installed upside down on the rear head and vice versa, to avoid inaccuracy in the circle diameter).
- Remove the flanges and measure the shortest distance between the scribed circles See Diagram 1

Effective Cylinder Length

Ordering a special manifold by effective cylinder length is commonly used since it does not require any special tools, however, this method will not account for machining inaccuracy in the cases or heads .

- Measure the cylinder length from gasket-surface to gasket-surface without the head and base gaskets in place. (A precision measuring instrument, such as a dial caliper, should be used to insure accurate results).
- If all components except the cylinder are stock, the actual cylinder length and the effective cylinder length are equal. However, if base plates will be used under the cylinders or if the crankcase deck height is taller than stock, the thickness of the base plates and any extra base gaskets, or the change in deck height must be added to the cylinder length to determine the effective cylinder length.
- If the cylinder heads have been decked to increase compression, the amount they have been shortened must be subtracted from the effective cylinder length.
- If the effective cylinder length is equal to or no more than 030" longer than the cylinder length listed for a specific manifold in a chart, that manifold will fit the engine.
- If the effective cylinder length is significantly different from any manifold that is available, the manifold must be special ordered. (When placing an order for a special manifold by effective cylinder length, you will be asked for actual dimensions of the cylinders and other components. S&S will calculate the effective cylinder length).

Manifold Size Number

Specifying the length of a special order manifold by size number has proven not to be a reliable method. Many manifolds ordered by this method have proved to be too long because the customer took a size number from a part that had been shortened and no longer matched the original specifications. Manifolds ordered by size number are not returnable because of fitment problems.

Manifolds For Panhead & Knucklehead Engines

Port-to-port measurement is easy since the ports are parallel to each other. On an assembled or mocked up engine, a measurement from head-to-head on opposite sides of each port should ideally be taken before the head bolts and base nuts are tightened. To insure that the ports are parallel, the heads and cylinders should be positioned so both measurements are equal. A precision measuring instrument, such as a dial caliper, should be used to ensure accurate results.

DIAGRAM 1 – FLANGE METHOD

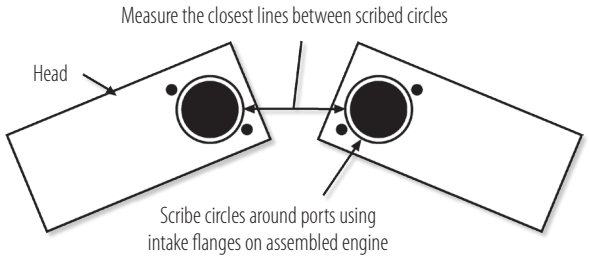

NOTE: Circles must be the same size as flange ID

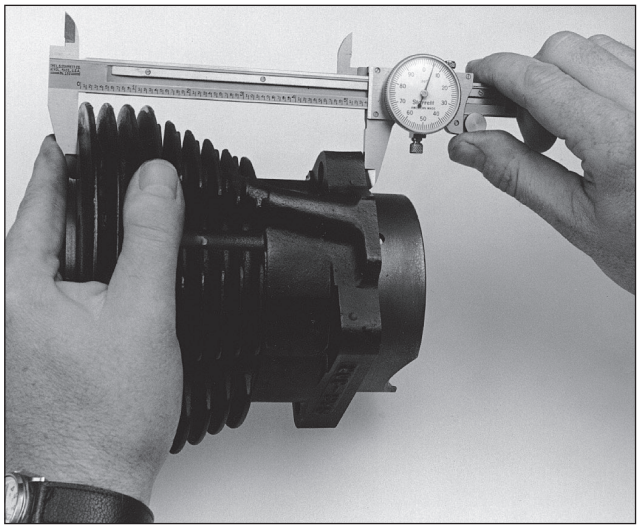

YEAR CODES FOR OUR SERIALIZED PRODUCTS

S&S serial numbers begin with the following manufacturing year codes Year codes coincide with S&S Cycle's fiscal year, which starts on Oct 1st of the previous calendar year A product with serial number beginning with the letter "A" was manufactured in fiscal year 1978, between 10-01-77 and 09-31-78, or in the fiscal year 2000

A 1978	R 1992	I .....NOT USED
B 1979	S..... 1993	J..... 2008
C..... 1980	T..... 1994	K 2009
D 1981	U 1995	L..... 2010
E 1982	V .....NOT USED	M..... 2011
F..... 1983	W..... 1996	N 2012
G 1984	X..... 1997	O .....NOT USED
H 1985	Y 1998	P 2013
I .....NOT USED	Z..... 1999	Q .....NOT USED
J..... 1986	A 2000	R 2014
K 1987	B 2001	S..... 2015
L..... 1988	C..... 2002	T..... 2016
M..... 1989	D 2003	U 2017
N 1990	E 2004	V .....NOT USED
O .....NOT USED	F..... 2005	W..... 2018
P 1991	G 2006	X..... 2019
Q .....NOT USED	H 2007	

OLDER S&S® CARBURETOR REPLACEMENT PARTS

When ordering parts for older S&S carburetors, it is necessary to determine the correct style of float, needle and bowl S&S has used two different mechanisms to connect the float to the inlet needle

Forked Mechanism: Older style that utilizes a forked float tang, which slides into a slot in the top of the needle

Wire Mechanism: Current style that features a needle with a wire hook which attaches to the tang of the float

Parts of differing styles may not be used together For example, although the carburetor bowls of the two styles look very similar, they are not interchangeable due to differences in the float retaining pin position Some parts are no longer available for carbs with forked style mechanisms If these parts must be replaced, the entire bowl assembly must be replaced with wire mechanism style components

FORKED TYPE MECHANISM (OBSOLETE)

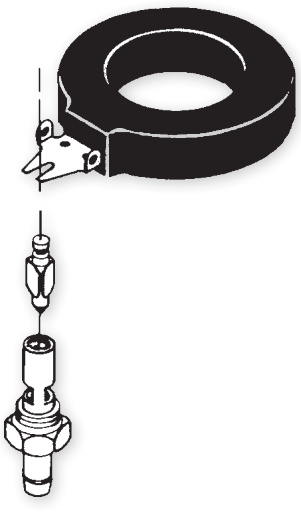

WIRE TYPE MECHANISM

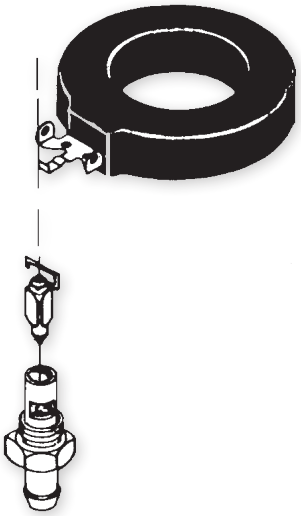

CALCULATING CUSTOM HEAD BOLT LENGTHS

Add:

A	**Cylinder Length**
	(Gasket surface to gasket surface measurement)
+ B	**Base Gasket Thickness**
+ C	**Head Gasket Thickness**
+ D or E	**Cylinder Head Thickness**
	(Gasket surface to head bolt washer pad measurement:)
	D Short Side
	All S&S = 1.207"
	Late 1985-'90 Stock = 1.207"
	1991-up Stock = 1.405"
	E Long Side
	All S&S = 2.700"
	All Stock = 2.700"
+ F	**Desired thread engagement .563"**
	Usually 1½ times stud diameter - stock studs are ⅜"
Subtract:	
G	**Cylinder Stud Installed Height**
	(Crankcase deck to top of stud measurement)

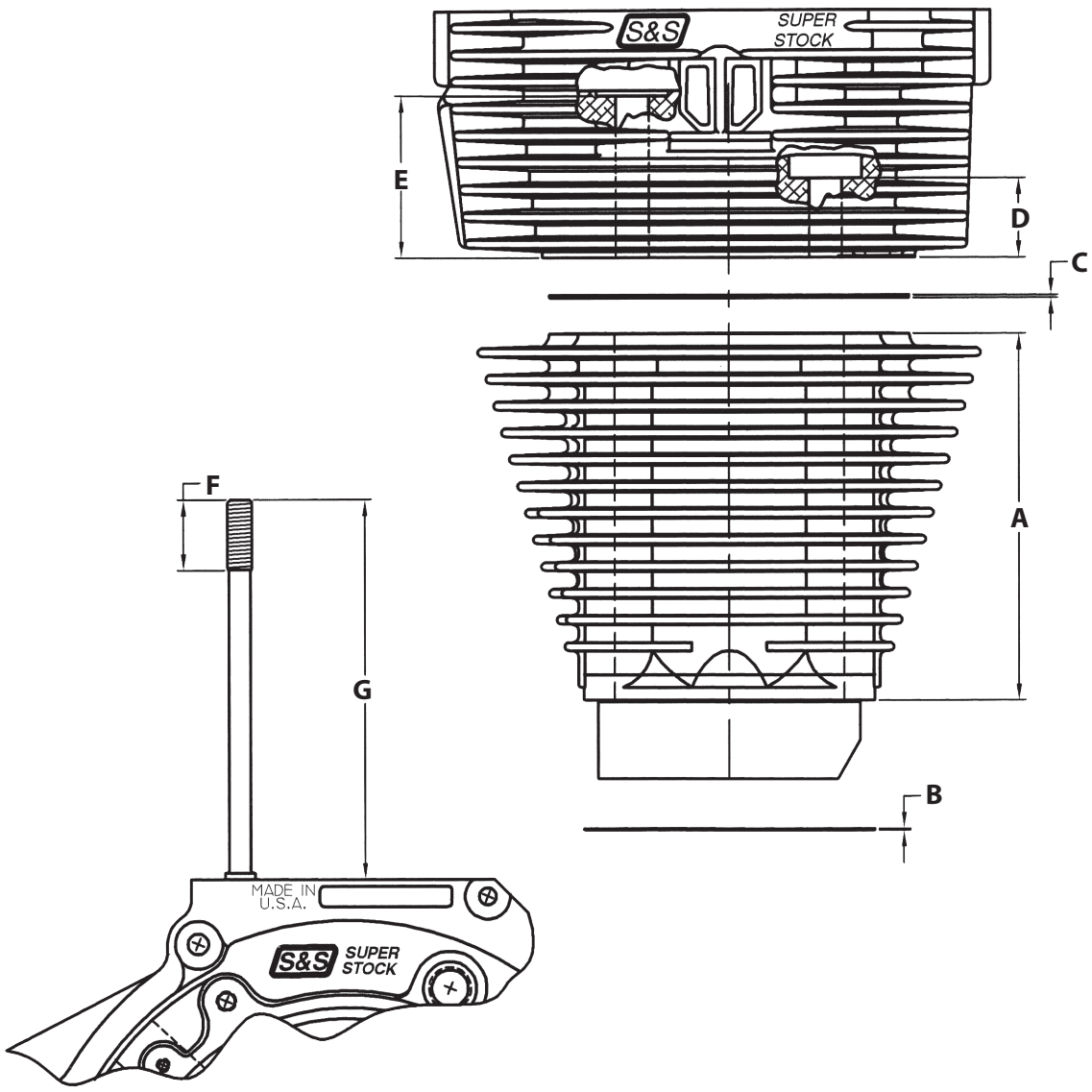

A

AIR CLEANERS

AIR CLEANER KIT
2014-2015 INDIAN® MODELS....315, 316
REPLACEMENT PARTS....317
SINGLE BORE TUNED INDUCTION SYSTEM
1999-2006 BIG TWINS....159
REPLACEMENT PARTS....226
2007-2016 BIG TWINS....68
REPLACEMENT PARTS....134, 135
SPORTSTER® & BUELL® MODELS....248
REPLACEMENT PARTS....294
STEALTH AIR CLEANER KITS
1984-1999 BIG TWINS
COVERS....247
1999-2006 BIG TWINS....155, 156, 157
COVERS....158, 307
REPLACEMENT PARTS....225
2007-2016 BIG TWINS....63, 64, 65
ADAPTOR FOR RUSHMORE COVER....70
COVERS....67
REPLACEMENT PARTS....133
S&S® ENGINES....66
MILWAUKEE-EIGHT®....22, 23
REPLACEMENT PARTS....37
SPORTSTER® & BUELL® MODELS....245, 246
REPLACEMENT PARTS....291
STREET® MODELS....305
REPLACEMENT PARTS....308
STREET ROD™....306
REPLACEMENT PARTS....309
STEALTHTWO AIR CLEANER KITS
INDIAN® MODELS....315
VICTORY® MODELS....315
TEARDROP AIR CLEANER KITS
1999-2006 BIG TWINS....160
REPLACEMENT PARTS....232
2007-2016 BIG TWINS....69
REPLACEMENT PARTS....136–137
SPORTSTER® & BUELL® MODELS....249
REPLACEMENT PARTS....292, 298

AIR FILTER

HIGH FLOW AIR FILTER KIT
1999-2006 BIG TWINS....161
2007-2016 BIG TWINS...., 24
SPORTSTER® & BUELL® MODELS....250
PRE-FILTERS
1999-2006 BIG TWINS....161
2007-2016 BIG TWINS...., 24
SPORTSTER® & BUELL® MODELS....250
STANDARD REPLACEMENT FILTERS
1999-2006 BIG TWINS....161
2007-2016 BIG TWINS...., 24
SPORTSTER® & BUELL® MODELS....250

B

BEARINGS

INNER PRIMARY BEARING RACE
1999-2006 BIG TWINS....205
2007-2016 BIG TWINS....112

BREATHER REED VALVES

CRANKCASE BREATHER REED VALVES
1999-2006 BIG TWINS....172
REPLACEMENT PARTS....238
2007-2016 BIG TWINS....81

C

CAM PLATES

1999-2006 BIG TWINS....174
REPLACEMENT PARTS....216
2007-2016 BIG TWINS....83
REPLACEMENT PARTS....125
MILWAUKEE-EIGHT®....31
REPLACEMENT PARTS....50

CAMSHAFTS

CAM CHEST UPGRADES
1999-2006 BIG TWINS....184
2007-2016 BIG TWINS....94
CAM RELATED REPAIR PARTS
1999-2006 BIG TWINS....183
2007-2016 BIG TWINS....93
CAMSHAFTS
1999-2006 BIG TWINS....180
2007-2016 BIG TWINS....90
SPORTSTER® & BUELL® MODELS....261
CHAIN DRIVE CAM KITS
1999-2006 BIG TWINS....183
2007-2016 BIG TWINS....93
MILWAUKEE-EIGHT®....30
GEAR DRIVE CAM KITS
1999-2006 BIG TWINS....182
2007-2016 BIG TWINS....92
MILWAUKEE-EIGHT®....30
HYDRAULIC CAM CHAIN TENSIONER KIT
1991-2006 BIG TWINS....184
2007-2016 BIG TWINS....94

CARBURETOR KITS

BLACK CARBURETORS
1999-2006 BIG TWINS....198
SPORTSTER® & BUELL® MODELS....276
BREATHER CONVERSION KIT
SPORTSTER® & BUELL® MODELS....276
JETS & CARB REBUILD KITS
1984-1999 BIG TWINS....201
1999-2006 BIG TWINS....201
SPORTSTER® & BUELL® MODELS....278
OLDER S&S® CARBURETOR REPLACEMENT KITS....344
RIGID CARB SUPPORT BRACKETS
SPORTSTER® & BUELL® MODELS....276
SUPER E & G COMPLETE CARBURETOR KITS
1999-2006 BIG TWINS....199
REPLACEMENT PARTS....236
SPORTSTER® & BUELL® MODELS....275
REPLACEMENT PARTS....300

CLUTCH
HEAVY DUTY DIAPHRAGM SPRING
1999-2006 BIG TWINS....206
2007-2016 BIG TWINS....112
VARIABLE PRESSURE CLUTCH
1999-2006 BIG TWINS....206
2007-2016 BIG TWINS....112

CRANKCASES
CRANKCASE BREATHER REED VALVES
1999-2006 BIG TWINS....172
REPLACEMENT PARTS....238
2007-2016 BIG TWINS....81
CRANKCASES
1999-2006 BIG TWINS....171
REPLACEMENT PARTS....212
SPORTSTER® & BUELL® MODELS....255
REPLACEMENT PARTS....286
SUPER STOCK™ T2 CRANKCASE
2007-2016 BIG TWINS....81
REPLACEMENT PARTS....120
TOOLS
CRANKCASE OIL PASSAGE DRILLING JIG....328

CYLINDER HEADS
B2 HEADS WITH STOCK BOLT PATTERN....101, 191
1999-2006 BIG TWINS....191
REPLACEMENT PARTS....218
2007-2016 BIG TWINS....101
REPLACEMENT PARTS....127
B3 CYLINDER HEADS
1999-2006 BIG TWINS
REPLACEMENT PARTS....219
2007-2016 BIG TWINS
REPLACEMENT PARTS....126
CNC PORTED CYLINDER HEAD SERVICE
1999-2006 BIG TWINS....190
2007-2016 BIG TWINS....104
SPORTSTER® & BUELL® MODELS....270
CYLINDER HEAD AND MOTOR MOUNTS
SPORTSTER® & BUELL® MODELS....273
HEAD BOLTS WITH WASHERS
1999-2006 BIG TWINS....194
2007-2016 BIG TWINS....105
SPORTSTER® & BUELL® MODELS....273
SUPER STOCK® CYLINDER HEADS
1999-2006 BIG TWINS....192
REPLACEMENT PARTS....220
2007-2016 BIG TWINS....102
REPLACEMENT PARTS....128
SPORTSTER® & BUELL® MODELS....271, 272
REPLACEMENT PARTS....288

CYLINDERS & PISTONS
CYLINDERS
1999-2006 BIG TWINS....177
2007-2016 BIG TWINS....86
MILWAUKEE-EIGHT®....26
SPORTSTER® & BUELL® MODELS....259
CYLINDERS & PISTON KITS
1999-2006 BIG TWINS....176, 177
2007-2016 BIG TWINS....84
SPORTSTER® & BUELL® MODELS....257, 258

D

DRIVE BELTS
GATES® HIGH STRENGTH FINAL DRIVE BELTS
1999-2006 BIG TWINS....207
2007-2016 BIG TWINS....113

E

ELECTRONICS
COMPRESSION RELEASE
1999-2006 BIG TWINS....203
2007-2016 BIG TWINS....110
HIGH OUTPUT COILS
1999-2006 BIG TWIN....205
SPORTSTER® & BUELL® MODELS....281
UNIVERSAL WIRING HARNESS
1999-2006 BIG TWINS....203

ENGINES
ENGINE OVERVIEW
1999-2006 BIG TWINS....168
2007-2017 BIG TWINS....78
ENGINE STANDS....332
SB100 ENGINES....255
SPORTSTER® & BUELL® MODELS....255
T143 ENGINES
1999-2006 BIG TWINS....169
2007-2015 BIG TWINS....79
T-SERIES LONG BLOCK ENGINES....170
1999-2006 BIG TWINS....170
T-SERIES T2 LONG BLOCK ENGINES....80
2007-2016 BIG TWINS....80

EXHAUST
DEALER SERVICE KIT....332
EL DORADO TOURING EXHAUST SYSTEM
2007-2016 BIG TWINS....55
MILWAUKEE-EIGHT®....10
GNX SLIP-ON MUFFLERS
MILWAUKEE-EIGHT®....8
REPLACEMENT PARTS....46
GRAND NATIONAL® 2:2 EXHAUST SYSTEM
2006-2017 DYNA® MODELS....61
REPLACEMENT PARTS....145
MILWAUKEE-EIGHT®....16
Mid Mount Brake Pedal Kit Replacement Parts....45
GRAND NATIONAL® 2:2 HIGH
INDIAN® FTR 1200®....313
REPLACEMENT PARTS....319
GRAND NATIONAL® 4" SLIP-ONS
1999-2006 BIG TWINS....152
REPLACEMENT PARTS....239
2007-2016 BIG TWINS....60
REPLACEMENT PARTS....143
MILWAUKEE-EIGHT®....11
REPLACEMENT PARTS....42
STREET®/STREET ROD™....304
GRAND NATIONAL® SLIP-ONS
1995-2009 DYNA® MODELS....57, 150
INDIAN® FTR 1200R....312
REPLACEMENT PARTS....318

GRAND NATIONAL 4" SLIP-ONS
STREET® MODELS
REPLACEMENT PARTS 310
GRAND NATIONAL SLIP-ONS
2018 HD® FAT BOB® MODELS 17
REPLACEMENT PARTS 40
2018 SOFTAIL® MODELS 18
REPLACEMENT PARTS 41
Mk45 4.5" TOURING MUFFLERS
1999-2006 BIG TWINS 153
REPLACEMENT PARTS 238
2007-2016 BIG TWINS 58, 153
REPLACEMENT PARTS 39, 142
MILWAUKEE-EIGHT® 9
POWER TUNE DUALS
1999-2006 BIG TWINS 154
REPLACEMENT PARTS 146, 242
2007-2016 BIG TWINS 62
MILWAUKEE-EIGHT®
REPLACEMENT PARTS 47
SIDEWINDER 2:1 EXHAUST SYSTEM
1999-2006 BIG TWINS 148
REPLACEMENT PARTS 241
2007-2017 BIG TWINS 54, 148
REPLACEMENT PARTS 144
MILWAUKEE-EIGHT® 13
SHADOW PIPE 14
SLASH CUT 4" SLIP-ONS
1999-2006 BIG TWINS 151
REPLACEMENT PARTS 239
2007-2017 BIG TWINS 59
REPLACEMENT PARTS 143
MILWAUKEE-EIGHT® ENGINES 12
REPLACEMENT PARTS 42
SLASH CUT SLIP-ONS
1995-2017 DYNA® MODELS 56
REPLACEMENT PARTS 140
1999-2006 BIG TWINS 149
2018 SOFTAIL® MODELS 19
REPLACEMENT PARTS 41
SUPERSTREET 2:1 EXHAUST SYSTEM
2007–2020 SPORTSTER® MODELS 244
REPLACEMENT PARTS 284
MILWAUKEE-EIGHT® 15
REPLACEMENT PARTS 38

F

FLYWHEELS

CONNECTING ROD CHECKING PINS 325
CRANKPIN NUT CLEARANCING GAUGES 328
FLYWHEEL BALANCING KITS 322
FLYWHEELS
1999-2006 BIG TWINS 173
REPLACEMENT PARTS 214, 215
2007-2016 BIG TWINS 82
REPLACEMENT PARTS 122, 123
MILWAUKEE-EIGHT® 27
REPLACEMENT PARTS 52
SPORTSTER® & BUELL® MODELS 256
REPLACEMENT PARTS 285
IDENTIFICATIONS OF FLYWHEELS 342

FUEL INJECTION

VFI MODULES
1999-2006 BIG TWINS 204
REPLACEMENT PARTS 205
2007-2016 BIG TWINS 111

G

GASKETS

GASKETS
1999-2006 BIG TWINS 208
2007-2016 BIG TWINS 114
MILWAUKEE-EIGHT® 35
SPORTSTER® & BUELL® MODELS 282

GEARCOVERS

BILLET GEARCOVERS
1999-2006 BIG TWINS 175
SPORTSTER® & BUELL® MODELS 257
DIE CAST GEAR COVERS
1999-2006 BIG TWINS 84, 175

H

HEAD BOLTS

CALCULATING CUSTOM HEAD BOLT LENGTHS 345
HEAD BOLT KITS
1999-2006 BIG TWINS 194
2007-2016 BIG TWINS 105
SPORTSTER® & BUELL® MODELS 273

J

JETS

JET & CARB REBUILD KITS
1999-2006 BIG TWINS 201
SPORTSTER® & BUELL® MODELS 278

M

MANIFOLDS

INTAKE MANIFOLDS
SPORTSTER® & BUELL® MODELS 280
MANIFOLD CONVERSION KIT
SPORTSTER® & BUELL® MODELS 280
MANIFOLDS FOR CARBURETED ENGINES
1999-2006 BIG TWINS 196
SPORTSTER® & BUELL® MODELS 281
MANIFOLDS FOR SINGLE BORE EFI BIG TWINS
1999-2006 BIG TWINS 196
2007-2016 BIG TWINS 108
ORDERING S&S® MANIFOLDS 343

O

OIL FILTER
BILLET FILTER BRACKET
SPORTSTER® & BUELL® MODELS 257

OIL PUMPS
OIL PUMPS
MILWAUKEE-EIGHT® 31
REPLACEMENT PARTS 49
TC3
1999-2006 BIG TWINS 174
REPLACEMENT PARTS 217
2007-2016 BIG TWINS 83
REPLACEMENT PARTS 124

P

PINION GEARS
PINION SHAFT GEAR KITS
SPORTSTER® & BUELL® MODELS 262

PISTONS
PISTON KITS
1999-2006 BIG TWINS 178
2007-2015 BIG TWINS 87
MILWAUKEE-EIGHT® 26
SPORTSTER® & BUELL® MODELS 259, 260

POWER KITS
95" HOT SET UP KITS
1999-2006 BIG TWINS 167
97" BIG BORE KITS
1999-2006 BIG TWINS 166
98" BIG BORE KITS
1999-2006 BIG TWINS 166
106" BIG BORE KITS
2007-2016 BIG TWINS 77
106" HOT SET UP KITS
2007-2016 BIG TWINS 77
106" STROKER KITS
1999-2006 BIG TWINS 165
107" BIG BORE KITS
2007-2016 76
110" PISTONS & CAMS
2007-2016 BIG TWINS 75
117" BIG BORE KITS
207-2016 BIG TWINS 74
124" BIG BORE KITS
MILWAUKEE-EIGHT® 25
124" HOT SET UP KITS
1999-2006 BIG TWINS 164
2007-2016 BIG TWINS 73
128" BIG BORE KITS
MILWAUKEE-EIGHT® 25
883 TO 1200CC CONVERSION KIT
SPORTSTER® & BUELL® MODELS 254
1250CC CONVERSION KIT
SPORTSTER® & BUELL® MODELS 253
HOOLIGAN KITS
SPORTSTER® & BUELL MODELS 252
POWER PACK
1999-2006 BIG TWINS 179
2007-2017 BIG TWINS 89
MILWAUKEE-EIGHT® 28, 29
SIDEWINDER® BIG BORE KITS
2007-2016 BIG TWINS 72, 163

PUSHRODS
NON-ADJUSTABLE PUSHRODS
1999-2006 BIG TWINS 186
2007-2016 BIG TWINS 97
PUSHROD COVERS & RELATED PARTS
1999-2006 BIG TWINS 187
2007-2016 BIG TWINS 97
SPORTSTER® & BUELL® MODELS 266
QUICKEE ADJUSTABLE PUSHRODS
1999-2006 BIG TWINS 186
2007-2016 BIG TWINS 96
MILWAUKEE-EIGHT® 34
SPORTSTER® & BUELL® MODELS 265
STANDARD ADJUSTABLE PUSHRODS
1999-2006 BIG TWINS 186
2007-2016 BIG TWINS 96
SPORTSTER® & BUELL® MODELS 265
TIME-SAVER ADJUSTABLE PUSHRODS
2007-2016 BIG TWINS 96

R

ROCKER ARMS
FORGED ROLLER ROCKER ARMS
1999-2006 BIG TWINS 189
2007-2016 BIG TWINS 100
SPORTSTER® & BUELL® MODELS 269
STANDARD FORGED ROCKER ARMS
SPORTSTER® & BUELL® MODELS 269

ROCKER COVERS
BILLET ROCKER COVERS
1999-2006 BIG TWINS
REPLACEMENT PARTS 224
2007-2016 BIG TWINS
REPLACEMENT PARTS 132
SPORTSTER® & BUELL® MODELS 274
REPLACEMENT PARTS 290
DIE CAST ROCKER COVERS
1999-2006 BIG TWINS 195
REPLACEMENT PARTS 223
2007-2016 BIG TWINS 105
REPLACEMENT PARTS 131

S

SPARK PLUGS
SPARK PLUGS 329

T

TAPPETS
HIGH PERFORMANCE HYDRAULIC TAPPETS
SPORTSTER® & BUELL® MODELS 263
HIGH QUALITY TAPPET ROLLER AND AXLE REPLACEMENT
SPORTSTER® & BUELL® MODELS 263
HYDRAULIC LIFTER LIMITED TRAVEL SPACER (HL2T)
SPORTSTER® & BUELL® MODELS 264
PREMIUM HIGH PERFORMANCE TAPPETS
2007-2016 BIG TWINS 95, 185
MILWAUKEE-EIGHT® 33
SPORTSTER® & BUELL® MODELS 263
TAPPET COVERS
1999-2006 BIG TWINS 185
REPLACEMENT PARTS 185
2007-2016 BIG TWINS 95
TAPPET GUIDES
MILWAUKEE-EIGHT® 33
SPORTSTER® & BUELL® MODELS 264

THROTTLE ASSEMBLIES
THROTTLE CABLE ASSEMBLIES
SPORTSTER® & BUELL® MODELS 277
REPLACEMENT PARTS 277

THROTTLE BODIES
SINGLE BORE EFI THROTTLE BODIES
1999-2006 BIG TWINS 198
REPLACEMENT PARTS 234
2007-2016 BIG TWINS 109
REPLACEMENT PARTS 119
THROTTLE HOG CABLE OPERATED THROTTLE BODIES
2007-2016 BIG TWINS 106
REPLACEMENT PARTS 118
THROTTLE HOG THROTTLE BODIES
1999-2006 BIG TWINS 197
1999-2007 BIG TWINS 197
2007-2016 BIG TWINS 107

THROTTLE CABLE
TWO CABLE THROTTLE ASSEMBLIES
1999-2006 BIG TWINS 200
REPLACEMENT PARTS 200

TRANSMISSIONS
TRANSMISSION TOP COVER
1999-2006 BIG TWINS 205

V

VALVE SPRINGS
REPLACEMENT PARTS FOR ALL LIFTS
1999-2006 BIG TWINS 222
2007-2016 BIG TWINS 130
SPORTSTER® & BUELL® MODELS 302
SIDEWINDER® .650" LIFT VALVE SPRINGS
1999-2006 BIG TWINS 188
2007-2016 BIG TWINS 99
SPORTSTER® & BUELL® MODELS 268
STREET PERFORMANCE .585" LIFT VALVE SPRINGS
1999-2006 BIG TWINS 188
2007-2016 BIG TWINS 99
SPORTSTER® & BUELL® MODELS 268
VALVE SPRING KITS
FOR B2 HEADS 98
FOR B3 HEADS 98
MILWAUKEE-EIGHT® 35



ARE YOU FAST ENOUGH?

S&S® CYCLE INVITES YOU TO JOIN THE CLUB

Go here: sscycle.com/join-seconds-club.

Rules:

1. Proof that your street-ridden motorcycle *(D.O.T. tires, full charging system, no wheelie bars or air shifts)* equipped with S&S performance products.
2. An 11.99 or quicker quarter-mile time. We'll need an official timing slip from a sanctioned dragstrip dated after June 1, 2005 and signed by the timekeeper. *(A good photo will do.)*
3. The registered owner must ride the motorcycle for the qualification pass.
4. A photograph of yourself and the motorcycle. Action shots are preferred if sharp and clear.

Members will receive a certificate, club patch, and t-shirt, but no payment or other considerations.

S&S Cycle, Inc. reserves the right to change prices, terms, availability, and specifications without prior notice.

CUSTOMER SUPPORT HOURS: MONDAY–FRIDAY 8:00A.M.–5:00P.M. CST

Calls should be directed to (608) 627-1497. International customers should use this number to place orders from outside the United States. This number should also be used if you have a technical or warranty question, or to contact the Accounting departments. This is not a toll-free number.



510-0585

S&S® Cycle, Inc. • 14025 CTY HWY G • Viola, WI 54664 USA
608-627-1497 • sscust@sscycle.com • sscycle.com