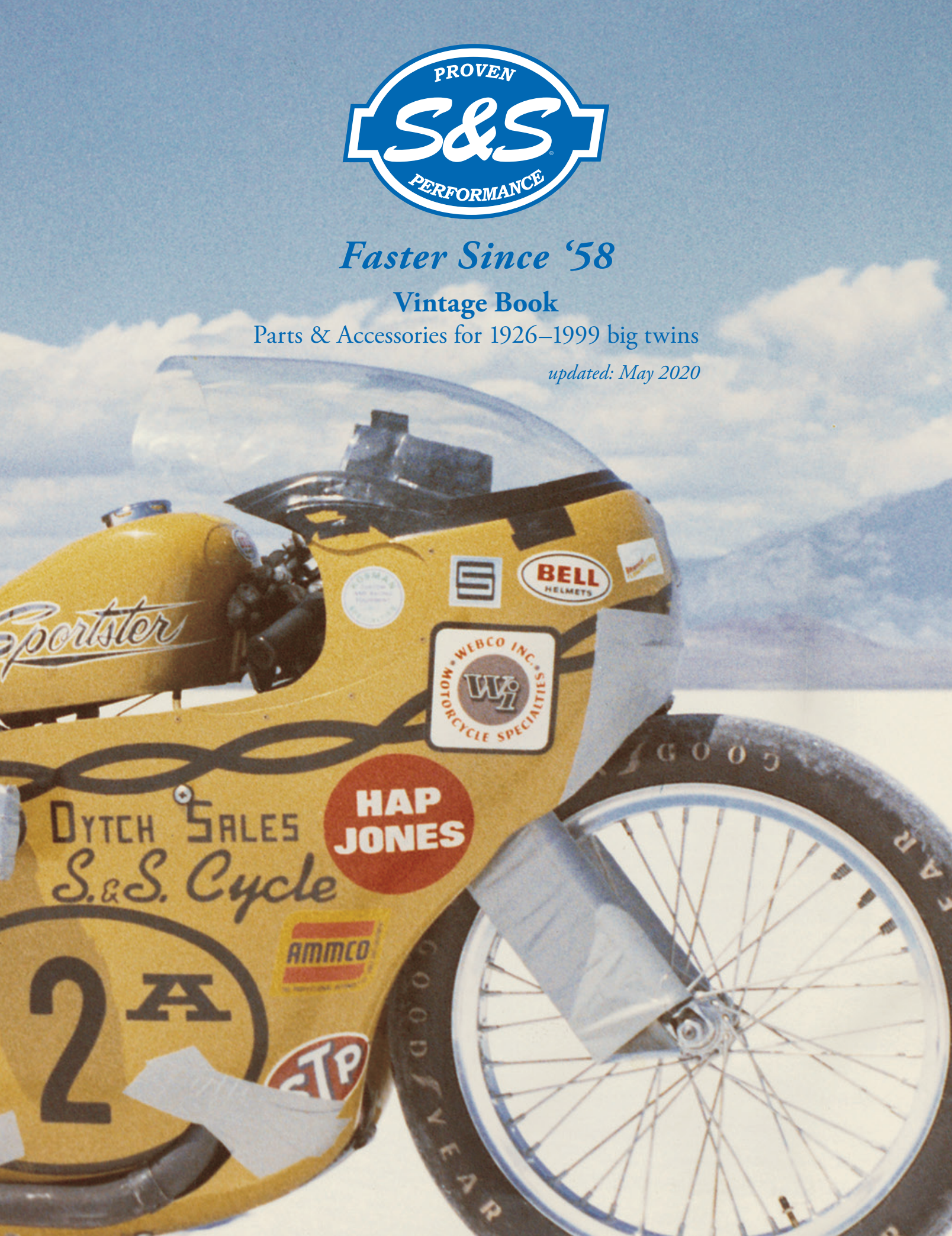


# *Faster Since '58*

## Vintage Book

Parts & Accessories for 1926–1999 big twins

*updated: May 2020*

# LOOKING FOR REPLACEMENT PARTS?

## 1984–1999 big twins


Air Cleaner, Carb Exempt
for S&S Super E or G Carbs ..... 98
Air Cleaner for Stock Fuel Systems ..... 92
Air Cleaner Kit, Stealth ..... 88
Air Cleaners, Super E & G ..... 96
Air Cleaner, Classic Teardrop
for S&S® Single Bore EFI ..... 94
Carburetor, Super E & G ..... 100
Crankcase, 2 Cam V-Series ..... 70
Crankcase, Super Stock®
for Big Twin Engines
of Less Than 4″ Cylinder Bore ..... 72
Crankcase, Special Application
for Big Twin Engines
with 4″, 4⅛″ & 4⅜″ Cylinder Bore ..... 74
Cylinder Heads, Super Stock® ..... 83
Cylinder Head, Super Stock® 3⅜″–4″ Bore ..... 84
Exhaust, Grand National 4″ Mufflers ..... 107
Exhaust, Grand National for Dyna® Models ... 106
Exhaust, Mk45 4.5″ Muffler ..... 103
Exhaust, Power Tune® Dual Header ..... 108
Exhaust, Shadow Pipe, ..... 105
Exhaust, Sidewinder 2:1 ..... 104
Exhaust, Slash Cut 4″ Mufflers ..... 107
Exhaust, Slash Cut for Dyna® Models ..... 106
Flywheels ..... 78
Gearcover Kit ..... 68
Heads, Performance ..... 82
Oil Pump, Standard ..... 80
Oil Pump, HVHP ..... 81
Rocker Cover, Die-Cast ..... 86
Rocker Cover, Billet ..... 87
Single Bore Tuned Induction System ..... 89
Throttle Body, Single Bore EFI ..... 102
Transmission Cases ..... 110
Valve Springs ..... 69


## Vintage Models


Air Cleaner, Stealth ..... 202
Air Cleaner, Super B ..... 201
Air Cleaner, Super E & G ..... 200
Air Cleaner, TÜV Approved ..... 203
Carburetor, Early Style Gas & Fuel ..... 199
Carburetor, L-Series GAL & GBL Gas ..... 198
Carburetor, L-Series MGL & MGAL Gas ..... 196
Carburetor, Super B ..... 193
Carburetor, Super E & G ..... 194
Crankcase, Super Stock
for Alternator Style Big Twin Engines
of Less Than 4″ Cylinder Bore ..... 176
Crankcase, Super Stock
for Alternator/Generator Style
Big Twin Engines
of Less Than 4″ Cylinder Bore ..... 178
Cylinder Head for 1936–'47 Knuckleheads &
KN-Series Engines ..... 190
Cylinder Head
for P-Series Engines, Panhead Cylinder Head
& Valve Train Update Kit &
Shovelhead Retro Conversion Kit ..... 188
Cylinder Heads, Super Stock® ..... 186
Flywheel for 1930–'84 Big Twin Engines ..... 180
Flywheel for 1957–'85 xl Engines ..... 181
Gearcover, Generator Style ..... 184
Gearcover Kit ..... 185
Oil Pump Kit ..... 182
Rocker Cover
for 1966–'84 Big Twin Engines ..... 192
Transmission Case, 5-Speed ..... 204

# S&S VINTAGE CONTENTS:


## 1984–1999 BIG TWIN
Performance products and service replacement parts for HD® Evolution® engines. The newest of these engines is over 20 years old and many are in need of an engine overhaul. Why not upgrade to a stroker or big bore kit while you have it apart? Why not replace it with a new engine? Just turn the page.

## 1926–1984 VINTAGE
Building an old school chopper, a retro vehicle or restoration? We have the engine components you need. Keep that old iron on the road!

## TOOLS & SHOP SUPPLIES
Every job is easier with the right tools. Keep your bike running in top condition! You'll find special tools, shop supplies and fluids you need, whether you are a "do-it-yourselfer" or a professional servicing technician.

## COMPANY POLICY & WARRANTY
Information on sales, ordering, shipments, S&S internet policy, and special orders. Warranty policies on all S&S parts and S&S assembled engines.

## APPENDIX & INDEX
Useful information for our customers: identify S&S components, measuring manifolds, calculating cylinder head bolt lengths, and an easy to use index to find products in this catalog.





60 124" engines were produced for our 60th year

# A WORD ABOUT DYNO NUMBERS

With a motto like "Proven Performance®", which is a registered trademark of S&S® Cycle Inc., it is very important that we be able to back up our claims regarding performance. It is also vitally important to be able to evaluate new designs in our development process. One of the tools we depend on for both of these functions is the chassis dynamometer.




Something that needs to be understood about dynamometers is that the results from one dyno will not necessarily be identical to those from another dyno. So comparing results from different dynos is bound to create a certain amount of confusion. This is especially true with dynos from different manufacturers. However, results of tests run on the same machine can be compared with a high degree of confidence. We can determine, for example if a performance modification increased power or torque, but there is a problem if you expect absolute values.

There are several brands of dynamometers which are in common use in the performance industry. These dynos will yield very reliable values for comparison, especially when tests are performed on the same machine. However values obtained from these dynos may not always agree. Which value is correct? It depends on who you ask.

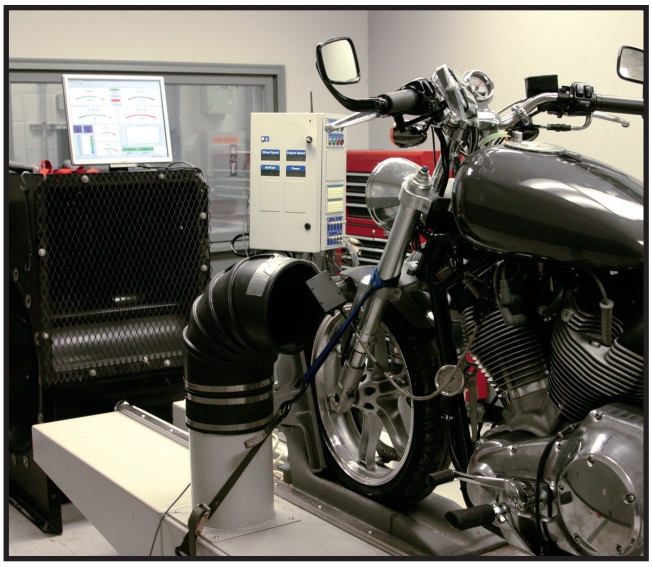

## NO ABSOLUTES

In our literature and catalogs, we publish dyno results so our customers easily can see how our products improve performance over stock. However, it must be remembered that these are comparative values, and should not be taken as absolutes. If a similar or even identical engine or motorcycle is tested on another dynamometer, the results will more than likely differ.

# SYMBOL KEY

**CONFIGURE TO ORDER:** CTO allows you to choose available options for a specific part or kit, and covers both "special order" parts and "made to order" kits. Some CTO kits have a base price with additional upcharges for the optional selections. In some cases, the entire price of a kit is determined by upcharges for the options selected. It is best to call an S&S customer service representative and configure the kit with exactly the options you want.

These are our latest innovations to the market.

**VIDEO** If you see this icon, there is a video available.

# EMISSIONS SYMBOLS

Part numbers marked with this logo are replacement parts for specific S&S certified emission engines and are legal for sale and use on these engines. The number(s) listed by each logo in the catalog indicates the model(s) of S&S certified engines that use the part. Use the table below to reference your engine model to its number in the logo.

*Example: This part is legal for use on V96E, V124C, and V124E engine models.*

| Engine Model Number | |
|---|---|
| V96E | 1 |
| V100C, V113E, V113C | 2 |
| V124E, V124C | 3 |
| X117E, X117C | 4 |

Part numbers marked with this logo are legal to be sold for and used as replacement parts on Harley-Davidson® motorcycles in all 50 states. These parts may only be installed on a motorcycle model listed in the part's description. Selling or installing these parts on a pollution controlled motorcycle not listed is in violation of California and/or Federal emissions laws and could result in fines and penalties.

S&S Cycle's products designed to meet California's emissions standards.

S&S Cycle products that are EC-approved have an e mark from the European Commission in accordance with the mandatory members of the EU Directive and are legal for sale and use in Europe.

Note:
Vehicles 1977 model year and earlier are exempt from emissions regulations. Owners of such vehicles may install any parts desired without concern about violating exhaust emissions regulations. However, local noise ordinances still apply to these vehicles, so the owner of a 1977 or earlier vehicle can still receive a noise citation if the vehicle is too loud.

# MISSION STATEMENT AND TRADEMARK INFORMATION

**MISSION STATEMENT:** Proven Performance® for the Powersports Industry.

**THE FOLLOWING ARE TRADEMARKS OF HARLEY-DAVIDSON® MOTORCYCLE COMPANY:** BUELL® • Dyna® • Evolution® • Evo™ • Harley® • Harley-Davidson® • HD® • H-D® • Heritage Softail® • Milwaukee-Eight® • Screamin' Eagle® • Softail® • Sportster® • Twin Cam 88® • Twin Cam 88B™ • Twin Cam 96™ • Twin Cam 96B™ • Twin Cam 103™ • Twin Cam 110™ • Tri Glide™

*Other trademarks mentioned in this catalog are the property of their respective owners and are used for reference only.*
*American Andrews Products • Delphi • Dynojet • Hitachi • Keihin • Kevlar • Magneti Marelli • • NHRA • Sunnen • SuperFlow • Tillotson • Timken • Viton*

**THE FOLLOWING ARE TRADEMARKS OF S&S CYCLE INC.**

Body Parts • Dealer Focus • EZFI • Frame Lock • G-Extreme • Hot Set Up Kit • IST • Performance Times • Power Tune • Proven Performance • S&S • S&S Service & Speed Center • Sidewinder • SPO • Super Stock • X-Wedge • Flathead Power • Viola V-Twin

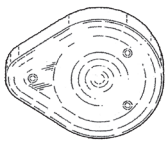




*DISCLAIMER: The names Harley, Harley-Davidson, Buell, H-D, and all trademarks owned by Harley-Davidson and its affiliated companies, and all Harley-Davidson and Buell part numbers and model designations are used for reference only. S&S Cycle is in no way associated with or authorized by Harley-Davidson Motor Co. to manufacture and sell any of the engine parts described in this catalog.*

**CUSTOMER SUPPORT HOURS: MONDAY–FRIDAY 8:00A.M.–5:00P.M. CST**

Calls should be directed to (608) 627-1497. International customers should use this number to place orders from outside the United States. This number should also be used if you have a technical or warranty question, or to contact the Accounting departments. This is not a toll-free number.

S&S Cycle, Inc. reserves the right to change prices, terms, availability, and specifications without prior notice.

# 1984–'99 BIG TWINS





**PERFORMANCE KITS**

80" Hot Set Up Kit ..... 25
89" Stroker Kit ..... 24
96" Hot Set Up Kit ..... 23
Performance Kit Overview ..... 21
Sidewinder® Kits ..... 22

**PERFORMANCE ENGINES**

49-State EPA Engines ..... 31
50-State Legal Engines ..... 32
V80 Engines ..... 29
V96 Engines ..... 29
V111 Engines ..... 28
V124 Engines ..... 27
V-Series Long Block ..... 30

**PERFORMANCE PARTS**

Air Cleaners ..... 16
Camshafts ..... 45
Carburetors ..... 58
Crankcases ..... 33
Cylinder Heads ..... 52
Cylinders & Pistons ..... 40
Drive Belts ..... 64
Electronics ..... 63
Exhaust ..... 8
Flywheels ..... 36
Gaskets ..... 65
Gearcovers ..... 39
Manifolds ..... 56
Oil Pumps ..... 81
Pushrods ..... 48
Rocker Arms ..... 51
Rocker Covers ..... 55
Tappets ..... 47
Valve Springs ..... 50

**REPLACEMENT PARTS ..... 68**

# SIDEWINDER® 2:1 EXHAUST




## FITMENT

- 1995–2016 Harley-Davidson® touring models

## FEATURES AND BENEFITS

- 2:1 styling for high-performance baggers
- Increased power and torque
- Available in show chrome or ceramic black finish
- Machined aluminum endcap
- Includes adapters that allow use of wide band or stock O2 sensors
- Stainless steel header construction
- Some fitments 50-State Legal: CARB EO# K-010-3
- Removable dB reducer included
- Made in the USA!

**See next page for Left Side Shadow Pipe**



**SIDEWINDER® 2:1 EXHAUST SYSTEM FOR 1995–'09 FL MODELS — 1995–'03, 2007 FL MODELS — CA EMISSIONS LEGAL†**

| Finish | Part # |
|---|---|
| Chrome with Black Highlighted Machined Endcap | **550-0776** |
| Black with Black Highlighted Machined Endcap | **550-0777** |

†DISCLAIMER: NOT LEGAL FOR SALE OR USE IN CALIFORNIA ON ANY POLLUTION CONTROLLED MOTOR VEHICLE. Not legal for sale or use on EPA pollution controlled vehicles originally equipped with catalyst.
*Qualified manufacturer declared emissions replacement part on FL touring models listed below.
California Models:
Fuel Injected Non-CVO FL Touring Model Years: 1995-2003 and 2007
CVO FL Touring Model Years: 2000-2003
49 State Models:
Fuel Injected Non-CVO FL Touring Model Years: 1995-2005 and 2007-2009
CVO FL Touring Model Years: 2000-2005
⚠WARNING: Cancer and Reproductive Harm – www.P65Warnings.ca.gov

→ **REPLACEMENT PARTS: SEE PAGE 104**



# SHADOW PIPE

## FITMENT

- 1995–2020 touring models with S&S Sidewinder® 2:1 exhaust

## FEATURES AND BENEFITS

- Available in show chrome and black ceramic finish
- Shadow muffler fills left side cutout in extended bags when running Sidewinder 2:1
- Matching endcap for left side is a mirror image of right side Sidewinder 2:1 Cap
- 4.5" design
- All hardware included





| 1995–2008 TOURING MODELS EQUIPPED WITH S&S® SIDEWINDER® 2:1 EXHAUST | |
|---|---|
| Chrome | **550-0828** |
| Black | **550-0830** |

→ REPLACEMENT PARTS: SEE PAGE 105

| If you have… | | | …you'll need |
|---|---|---|---|
| BIKE | FINISH | SIDEWINDER PART # | SHADOW PIPE PART # |
| 1995–2008 Touring | Chrome | **550-0776** | **550-0828** |
| | Black | **550-0777** | **550-0830** |



# SLASH CUT SLIP-ON MUFFLERS FOR DYNA® MODELS

## FITMENT

- 1995–2009 Dyna® models with staggered exhaust

## FEATURES AND BENEFITS

- Up to 16% more horsepower and 10% more torque *(when used with Stealth Air Cleaner Kit)*
- Wake up your bike without breaking your budget
- Classic slash cut styling
- Show chrome or ceramic black finish
- SAE J2825 sound level compliant
- 50-state legal
- Removable dB reducer
- Made in USA!



**Removable dB reducer**



### SLASH CUT MUFFLERS FOR 1995–2009 DYNA® MODELS WITH STAGGERED EXHAUST

| Finish | Part # |
|---|---|
| Chrome | **550-0718** |
| Black | **550-0720** |

DISCLAIMER: NOT LEGAL FOR SALE OR USE IN CALIFORNIA ON ANY POLLUTION CONTROLLED MOTOR VEHICLES. Not legal for sale or use on EPA pollution controlled motorcycles originally equipped with mufflers containing catalyst.
*Qualified Manufacturer Declared Emissions Replacement Part on the Dyna Models Listed Below.
California Models: MY 2006-2007, Except CVO models
49 State Models: MY 1995-2009, Except CVO models

⚠WARNING: Cancer and Reproductive Harm – www.P65Warnings.ca.gov

→ REPLACEMENT PARTS: SEE PAGE 106

# GRAND NATIONAL® SLIP-ON MUFFLERS FOR DYNA® MODELS

## FITMENT

- 1995–2009 Dyna® models with staggered exhaust

## FEATURES AND BENEFITS

- Up to 17% more horsepower and 9% more torque *(when used with Stealth Air Cleaner Kit)*
- Race inspired Grand National endcaps
- Show chrome or ceramic black finish
- Deep performance rumble
- SAE J2825 sound level compliant
- 50-state legal
- Removable dB reducer
- Made in USA!



**Removable dB reducer**




### GRAND NATIONAL® MUFFLERS FOR 1995–2009 DYNA® MODELS WITH STAGGERED EXHAUST

| Finish | Part # |
|---|---|
| Chrome | **550-0719** |
| Black | **550-0721** |

DISCLAIMER: NOT LEGAL FOR SALE OR USE IN CALIFORNIA ON ANY POLLUTION CONTROLLED MOTOR VEHICLES. Not legal for sale or use on EPA pollution controlled motorcycles originally equipped with mufflers containing catalyst.

*Qualified Manufacturer Declared Emissions Replacement Part on the Dyna Models Listed Below.
California Models: MY 2006-2007, Except CVO models
49 State Models: MY 1995-2009, Except CVO models

⚠ WARNING: Cancer and Reproductive Harm – www.P65Warnings.ca.gov

→ REPLACEMENT PARTS: SEE PAGE 106

# SLASH CUT 4" SLIP-ON MUFFLERS

## FITMENT

- 1995–2016 Harley-Davidson® touring models with non-catalyst mufflers

## FEATURES AND BENEFITS

- Show quality chrome or ceramic black finish
- Economical price
- High flow baffle
- Aggressive sound & excellent HP
- SAE J2825 Sound Level Compliant
- Removable dB reducer
- Made in USA!





### SLASH CUT 4" TOURING MUFFLERS FOR 1995–2016 BIG TWINS

| Finish | Part # |
|---|---|
| Chrome | **550-0691** |
| Black | **550-0692** |

DISCLAIMER: NOT LEGAL FOR SALE OR USE IN CALIFORNIA ON ANY POLLUTION CONTROLLED MOTOR VEHICLES. Not legal for sale or use on EPA pollution controlled motorcycles originally equipped with mufflers containing catalyst.

*Qualified manufacturer declared emissions replacement part on the FL touring models listed below.

California FL Touring Models:
Fuel Injected MY 1995-2003, 2007, and 2009-2016
CVO MY 2000-2003, and 2009-2016
49 State FL touring Models:
Carbureted MY 1995-2005
Fuel Injected MY 1995-2005, 2007-2016
CVO MY 2000-2005, and 2009-2016

⚠ WARNING: Cancer and Reproductive Harm – www.P65Warnings.ca.gov



**Removable dB reducer**

→ REPLACEMENT PARTS: SEE PAGE 107

# GRAND NATIONAL® 4" SLIP-ON MUFFLERS

## FITMENT

- 1995–2016 Harley-Davidson® touring models with non-catalyst mufflers

## FEATURES AND BENEFITS

- Show quality chrome or ceramic black finish
- Economical price
- High flow baffle
- Aggressive sound & excellent HP
- SAE J2825 Sound Level Compliant
- Removable dB reducer
- Made in USA!





Grand National

### GRAND NATIONAL® 4" MUFFLERS FOR 1995–2016 BIG TWINS

| Finish | Part # |
|---|---|
| Chrome | **550-0689** |
| Black | **550-0690** |

DISCLAIMER: NOT LEGAL FOR SALE OR USE IN CALIFORNIA ON ANY POLLUTION CONTROLLED MOTOR VEHICLES. Not legal for sale or use on EPA pollution controlled motorcycles originally equipped with mufflers containing catalyst.

*Qualified manufacturer declared emissions replacement part on the FL touring models listed below.
California FL Touring Models:
Fuel Injected MY 1995-2003, 2007, and 2009-2016
CVO MY 2000-2003, and 2009-2016
49 State FL touring Models:
Carbureted MY 1995-2005
Fuel Injected MY 1995-2005, 2007-2016
CVO MY 2000-2005, and 2009-2016

⚠ WARNING: Cancer and Reproductive Harm – www.P65Warnings.ca.gov



**Removable dB reducer**

→ REPLACEMENT PARTS: SEE PAGE 107

# Mk45 TOURING MUFFLERS

Mk45 4.5" Touring Mufflers are the result of decades of riding, racing and tuning. Combining both a stainless steel baffle and fiberglass packing, they create a deep rumble and improved horsepower and torque, all while adding a unique look with styled aluminum endcaps.



## FITMENT

- 1995–2016 Harley-Davidson® touring models

## FEATURES AND BENEFITS

- 7 horsepower gain*
- Bold 4.5" design — with stainless steel baffle and RaceTEX cartridge packing
- Available in show quality chrome or ceramic black finish
- Choose from S&S® Thruster or Tracer endcap designs in chrome or black
- SAE J2825 Sound Level Compliant
- 50-state legal
- Removable dB reducer
- Made in USA!

*Tested with S&S Power Tune® Dual Header and Stealth Air Cleaner Kit

### Mk45 4.5" TOURING MUFFLERS W/ENDCAPS

| Muffler Body Finish | Endcap Finish & Style | Part # |
|---|---|---|
| Chrome | Chrome Thruster | **550-0620** |
| | Black Highlight Machined Thruster | **550-0619** |
| | Chrome Tracer | **550-0624** |
| | Black Highlight Machined Tracer | **550-0623** |
| Ceramic black | Chrome Thruster | **550-0622** |
| | Black Highlight Machined Thruster | **550-0621** |
| | Chrome Tracer | **550-0626** |
| | Black Highlight Machined Tracer | **550-0625** |

DISCLAIMER: NOT LEGAL FOR SALE OR USE IN CALIFORNIA ON ANY POLLUTION CONTROLLED MOTOR VEHICLES. Not legal for sale or use on EPA pollution controlled motorcycles originally equipped with mufflers containing catalyst.
*Qualified manufacturer declared emissions replacement part on the FL touring models listed below.
California FL Touring Models:
Fuel Injected MY 1995-2003, 2007, and 2009-2016
CVO MY 2000-2003, and 2009-2016
49 State FL touring Models:
Carbureted MY 1995-2005
Fuel Injected MY 1995-2005, 2007-2016
CVO MY 2000-2005, and 2009-2016

⚠ WARNING: Cancer and Reproductive Harm – www.P65Warnings.ca.gov



**Removable dB reducer**

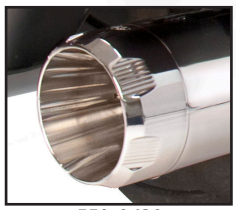

**550-0620**

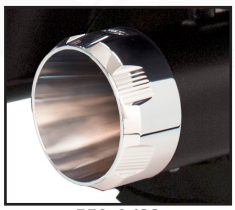

**550-0622**



**550-0619**



**550-0621**

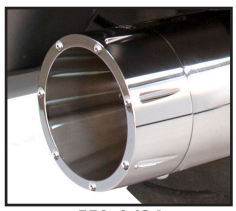

**550-0624**



**550-0623**

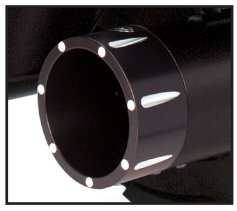

**550-0625**



**550-0626**

→ REPLACEMENT PARTS: SEE PAGE 103

# POWER TUNE® DUAL HEADERS

## FITMENT

- Non-catalyst equipped Harley-Davidson® touring models
- 1995–'08 touring big twins

## FEATURES AND BENEFITS

- Adds 8 horsepower over stock header pipes
- Independent dual look with hidden crossover
- Exclusive design moves the rear cylinder header away from the passenger to reduce radiated heat
- Full chrome or ceramic black heat shielding with 220º coverage
- Updated styling to give the bike a modern look
- Oxygen sensor bungs**
- Spherical inlet design for improved sealing and exhaust gasket durability
- Hardware included to mount crossover pipe
- Exhaust port gaskets included
- Made in the U.S.A.




**POWER TUNE® DUAL HEADERS**

| Fitment | Finish | Part # |
|---|---|---|
| 1995–'08* big twins | Chrome | **550-0003A** |
| | Black | **550-0142A** |

***Has 18mm sensor fittings in the stock locations for 2007-'08 bikes. If not equipped with oxygen ensors, the ports can be used for tuning. Plugs are included if ports are not used.*

DISCLAIMER: NOT LEGAL FOR SALE OR USE IN CALIFORNIA ON ANY POLLUTION CONTROLLED MOTOR VEHICLE. Not legal for sale or use on EPA pollution controlled vehicles originally equipped with catalyst.

*Qualified manufacturer declared emissions replacement part on FL touring models listed below.
California Models:
FL Touring Fuel Injected MY 1995-2003, and 2007
CVO FL Touring MY 2000-2003
49 State Models:
FL Touring Carbureted MY 1995-2005
FL Touring Fuel Injected MY 1995-2005 and 2007-2008
CVO FL Touring MY 2000-2005

⚠ WARNING: Cancer and Reproductive Harm – www.P65Warnings.ca.gov

# SPECIAL NOTES:

It may be necessary to re-jet the carburetor or recalibrate the fuel injection system for best performance when a change is made in the exhaust system.

Dyno results are from tests performed at the S&S® Research and Development facility in Viola, Wisconsin.

→ REPLACEMENT PARTS: SEE PAGE 108

# STEALTH AIR CLEANER KITS

## FITMENT
- 1993–'99 big twins

***NOTE:*** Fuel injection tuning is not required for this product

→ REPLACEMENT PARTS: SEE 88

## FEATURES AND BENEFITS
- Air directional stinger cone in the filter
- Use with any of several S&S designed covers. See PAGE 17
- Or use with your stock Harley-Davidson® Twin Cam 88®, 96™ or 103™ air cleaner cover — *the word "sleeper" comes to mind (except 2015 air cleaner covers)*
- High flow (1" taller) filter kit available



### AIRSTREAM COVER IN CHROME PLUS STEALTH AIR CLEANER KIT±

| Application | Fuel System | Part # |
|---|---|---|
| 1993–'99 bt | Stock CV | **170-0055** |
| | S&S Super E & G Carbs | **170-0062** |

DISCLAIMER: NOT LEGAL FOR SALE OR USE IN CALIFORNIA ON ANY POLLUTION CONTROLLED MOTOR VEHICLE. NOT LEGAL FOR SALE OR USE NATIONWIDE ON ANY FEDERAL POLLUTION CONTROLLED MOTOR VEHICLE UNDER THE CLEAN AIR ACT ±⚠WARNING: Cancer and Reproductive Harm – www.P65Warnings.ca.gov



### MUSCLE COVER IN CHROME PLUS STEALTH AIR CLEANER KIT±

| Application | Fuel System | Part # |
|---|---|---|
| 1993–'99 bt | Stock CV | **170-0103** |
| | S&S Super E & G Carbs | **170-0109** |

DISCLAIMER: NOT LEGAL FOR SALE OR USE IN CALIFORNIA ON ANY POLLUTION CONTROLLED MOTOR VEHICLE. NOT LEGAL FOR SALE OR USE NATIONWIDE ON ANY FEDERAL POLLUTION CONTROLLED MOTOR VEHICLE UNDER THE CLEAN AIR ACT ±⚠WARNING: Cancer and Reproductive Harm – www.P65Warnings.ca.gov



### BOBBER-DISHED COVER IN CHROME PLUS STEALTH AIR CLEANER KIT±

| Application | Fuel System | Part # |
|---|---|---|
| 1993–'99 bt | Stock CV | **170-0101** |
| | S&S Super E & G Carbs | **170-0107** |

DISCLAIMER: NOT LEGAL FOR SALE OR USE IN CALIFORNIA ON ANY POLLUTION CONTROLLED MOTOR VEHICLE. NOT LEGAL FOR SALE OR USE NATIONWIDE ON ANY FEDERAL POLLUTION CONTROLLED MOTOR VEHICLE UNDER THE CLEAN AIR ACT ±⚠WARNING: Cancer and Reproductive Harm – www.P65Warnings.ca.gov



### BOBBER-DOMED COVER IN CHROME PLUS STEALTH AIR CLEANER KIT±

| Application | Fuel System | Part # |
|---|---|---|
| 1993–'99 bt | Stock CV | **170-0102** |
| | S&S Super E & G Carbs | **170-0108** |

DISCLAIMER: NOT LEGAL FOR SALE OR USE IN CALIFORNIA ON ANY POLLUTION CONTROLLED MOTOR VEHICLE. NOT LEGAL FOR SALE OR USE NATIONWIDE ON ANY FEDERAL POLLUTION CONTROLLED MOTOR VEHICLE UNDER THE CLEAN AIR ACT. ±⚠WARNING: Cancer and Reproductive Harm – www.P65Warnings.ca.gov

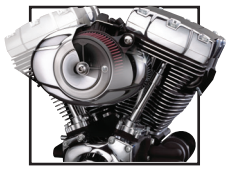

### STEALTH AIR CLEANER KITS* — NO COVER

| Application | Fuel System | Part # |
|---|---|---|
| 1993–'99 bt | Stock CV | **170-0100** |
| | S&S Super E & G Carbs | **170-0057** |

DISCLAIMER: NOT LEGAL FOR SALE OR USE IN CALIFORNIA ON ANY POLLUTION CONTROLLED MOTOR VEHICLE. NOT LEGAL FOR SALE OR USE NATIONWIDE ON ANY FEDERAL POLLUTION CONTROLLED MOTOR VEHICLE UNDER THE CLEAN AIR ACT*These kits do not contain covers –Choose an S&S cover on PAGE 17

### STEALTH AIR CLEANER KITS FOR S&S ENGINES

| Fitment | Fuel System | Part # |
|---|---|---|
| V111 Long Block 1984–'99 bt (p/n 310-0766) | S&S E or G Carburetor | **170-0057** |
| V111 Long Block 1984–'99 bt (p/n 310-0766) | Stock CV/EFI Delphi® | **170-0100** |
| V80 Long Block 1984–'99 bt (p/n 310-0233 & 310-0232) | S&S E or G Carburetor | **170-0057** |
| V80 Long Block 1984–'99 bt (p/n 310-0233 & 310-0232) | Stock CV/EFI Delphi® | **170-0100** |
| 1995–1999 S&S Super Stock Engines | S&S Single Bore VFI 52mm Throttle Bodies, Super E/G | **170-0287** |
| 1995–1999 EFI big twins | S&S Single Bore VFI 58mm Throttle Bodies | **170-0283** |
| 1999–2017 EFI big twins | S&S Single Bore VFI 58mm Throttle Bodies | **170-0284** |

DISCLAIMER: NOT LEGAL FOR SALE OR USE IN CALIFORNIA ON ANY POLLUTION CONTROLLED MOTOR VEHICLE. NOT LEGAL FOR SALE OR USE NATIONWIDE ON ANY FEDERAL POLLUTION CONTROLLED MOTOR VEHICLE UNDER THE CLEAN AIR ACT

# STEALTH AIR CLEANER KIT COVERS




NEW FOR 2020 FROM S&S CYCLE

Stealth Tribute






Teardrop

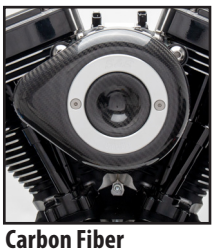

Carbon Fiber



Mini in Gloss Black



Tri-Spoke



Torker



Air 1



Airstream in Chrome



Airstream in Gloss Black



Muscle in Chrome



Muscle in Gloss Black




111




124




143

## STEALTH COVERS

| NEW FOR 2020 Tribute | | Teardrop | | Teardrop—Slasher | | Carbon Fiber | Mini | |
|---|---|---|---|---|---|---|---|---|
| Chrome | Gloss Black | Chrome | Gloss Black | Chrome | Gloss Black | Black | Chrome | Gloss Black |
| 170-0592 | 170-0593 | 170-0530 | 170-0531 | 170-0532 | 170-0533 | 170-0501 | 170-0367 | 170-0366 |

| Tri-Spoke | Torker | Air 1 | Airstream | | Muscle | |
|---|---|---|---|---|---|---|
| Gloss Black w/Highlights | Gloss Black w/Highlights | Gloss Black w/Highlights | Chrome | Gloss Black | Chrome | Gloss Black with Highlighted Logo |
| 170-0210 | 170-0206 | 170-0214 | 170-0118 | 170-0396 | 170-0121 | 170-0463 |

| Displacement | | |
|---|---|---|
| 111 | 124 | 143 |
| 170-0319 | 170-0321 | 170-0323 |

⚠WARNING: Cancer and Reproductive Harm – www.P65Warnings.ca.gov

# CLASSIC TEARDROP AIR CLEANER KIT

## FITMENT
- 1984–'99 big twins
- S&S V-Series engines

## FEATURES AND BENEFITS
- Uniquely designed backplate has air horn style radiused entryway to reduce turbulence
- Dimpled cover with directional air cone on inside creates smooth path for air
- Great addition to performance exhaust or cams

## KIT CONTENTS
- Filter
- Classic Teardrop air cleaner cover
- Backing plate
- All mounting hardware



**17-0450**±

### CLASSIC TEARDROP AIR CLEANER KITS

| Model/Engine | Finish | Stock Carb/EFI | S&S Super E/G |
|---|---|---|---|
| 1993–'06 carbureted big twins | Chrome | **17-0450**± | **17-0404**± |
| | Gloss Black | **170-0181A** | – |
| 1990–'92 | Chrome | – | **17-0399**± |
| 1984–'89 | Chrome | – | **17-0399**± |
| S&S 4⅛" Bore Engines | Slasher Chrome | – | **17-0416**± |

DISCLAIMER: NOT LEGAL FOR SALE OR USE IN CALIFORNIA ON ANY POLLUTION CONTROLLED MOTOR VEHICLE. NOT LEGAL FOR SALE OR USE NATIONWIDE ON ANY FEDERAL POLLUTION CONTROLLED MOTOR VEHICLE UNDER THE CLEAN AIR ACT

± ⚠ WARNING: Cancer and Reproductive Harm – www.P65Warnings.ca.gov

### CLASSIC TEARDROP AIR CLEANER KITS S&S SINGLE BORE EFI±

| Model/Engine | Finish | 58mm |
|---|---|---|
| S&S 4⅛" Bore Engines | Chrome | **106-4668** |

DISCLAIMER: NOT LEGAL FOR SALE OR USE IN CALIFORNIA ON ANY POLLUTION CONTROLLED MOTOR VEHICLE. NOT LEGAL FOR SALE OR USE NATIONWIDE ON ANY FEDERAL POLLUTION CONTROLLED MOTOR VEHICLE UNDER THE CLEAN AIR ACT

± ⚠ WARNING: Cancer and Reproductive Harm – www.P65Warnings.ca.gov

→ REPLACEMENT PARTS STARTING ON PAGE 90




### CLASSIC TEARDROP AIR CLEANER COVERS

| Style | Finish | Part # |
|---|---|---|
| Classic Teardrop | Chrome | **17-0378**± |
| | Gloss Black | **170-0384A** |
| Slasher Teardrop | Chrome | **17-0004**± |
| | Gloss Black | **170-0419** |
| Nostalgic Teardrop | Polished | **17-0071** |

± ⚠ WARNING: Cancer and Reproductive Harm – www.P65Warnings.ca.gov

***NOTE:*** Fuel delivery (carbureted or EFI) may need to be modified to maintain the correct air and fuel mixture.

# CARB EXEMPT AIR CLEANER KITS

## FITMENT
- 50-State emissions compliant S&S V-Series engines

## KIT CONTENTS
- Filter
- Cover
- Valve assembly, backplate, sealed air cleaner
- Necessary mounting hardware and o-rings

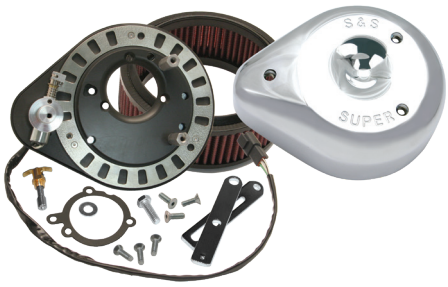


**106-1449±**

### SEALED AIR CLEANER KITS±

| Engine | Part # |
|---|---|
| V96, V100, V113 | **106-1449** |
| V111, V117, V124 | **106-3082** |

±⚠WARNING: Cancer and Reproductive Harm – www.P65Warnings.ca.gov

*S&S® sealed air cleaner kit uses a solenoid operated nickel plated rotary valve to keep hydrocarbons from escaping into the atmosphere when the engine is not running, but opens to allow air to enter when the starter button is depressed.*

# SINGLE BORE TUNED INDUCTION SYSTEM

## *FITMENT*
- 1984–'99 big twin
- S&S V-Series

## *FEATURES AND BENEFITS*
- Bolt-on performance—over twice the filtering area over stock intake system
- Increases horsepower and torque across the rpm range using air column inertia and carefully timed gas dynamic pressure waves
- Smooth intake tract of carefully selected tuned lengths increases performance
- High flow washable and reusable cotton media provides performance, protection, and economy




### SINGLE BORE TUNED INDUCTION SYSTEM KITS±

| Fitment | Fuel Delivery | Finish | Part # |
|---|---|---|---|
| 4⅛" Bore S&S V-Series (S&S bolt pattern w/vaccum breathing) | S&S Single Bore EFI | Chrome/Red Filters | **170-0083** |
| | S&S Super E/G | Chrome/Red Filters | **170-0084** |
| 1984–'99 big twins & S&S engines w/stock head breathing | S&S Single Bore EFI | Chrome/Red Filters | **170-0085** |
| | S&S Super E/G | Chrome/Red Filters | **170-0086** |
| 1984–'06 big twins | Stock CV | Chrome/Red Filters | **170-0087** |
| CTO | Specify | Specify | **106-5337*** |

***NOTES:*** Single bore tuned induction will not fit on motorcycles equipped with fairing lower glove boxes.

Tuned induction system does not fit Dyna® Wide Glide® models due to runner to gas tank interference.

DISCLAIMER: NOT LEGAL FOR SALE OR USE IN CALIFORNIA ON ANY POLLUTION CONTROLLED MOTOR VEHICLE. NOT LEGAL FOR SALE OR USE NATIONWIDE ON ANY FEDERAL POLLUTION CONTROLLED MOTOR VEHICLE UNDER THE CLEAN AIR ACT

**Use the Configure to Order (CTO) Part # to order different finish and filter color*

±⚠WARNING: Cancer and Reproductive Harm – www.P65Warnings.ca.gov

→ REPLACEMENT PARTS: SEE PAGE 89

# BREATHER CONVERSION KIT

## FITMENT
- 1993–'99 big twin

## FEATURES AND BENEFITS
- Instead of o-rings, banjo fittings are sealed with durable silicon coated washers



*Breather conversion kit for big twin engines updates earlier S&S air cleaner kits for 1993–'99 big twins to the latest breather hardware.*

### BREATHER CONVERSION KIT

| Application | Part # |
|---|---|
| 1993–'99 big twins | **17-0486** |

# PRE-FILTERS

## FITMENT

- S&S® Stealth Air Filters

## *FEATURES AND BENEFITS*

- Water resistant
- Prevents large debris from prematurely clogging filter
- Washable Nylon
- Promotes longer filter life
- Reduces the risk of water entering air intake system



170-0197

**PRE-FILTERS**

| Application | Part # |
|---|---|
| Standard Stealth Air Filter | **170-0193** |
| 1" Tall Stealth Air Filter | **170-0197** |

# HIGH FLOW AIR FILTER KITS

## *FITMENT*

- S&S Classic Teardrop air cleaners for Super E & G carbs and S&S EFI throttle bodies

## *FEATURES AND BENEFITS*

- Low restriction filter element comes pre-oiled for true plug and play installation
- 1" wider filtration area provides up to 37% more airflow over standard S&S filters
- Resulting band of exposed filter material imparts a high performance look

## *KIT CONTENTS*

- Wide filter
- Filter spacers



170-0127



17-0045

**HIGH FLOW AIR FILTERS**

| Description | Fitment | Part # |
|---|---|---|
| High Flow Air Filter Kit *(includes spacers)* | Classic Teardrop | **17-0045** |
| | Stealth, 1" Taller | **170-0127*** |
| 1" Taller Filter Only | Super E/G | **106-4724** |
| | Stealth | **170-0154** |
| Spacer | Classic Teardrop & Stealth, 1" Taller | **50-5009-S** |

*DISCLAIMER: NOT LEGAL FOR SALE OR USE IN CALIFORNIA ON ANY POLLUTION CONTROLLED MOTOR VEHICLE. NOT LEGAL FOR SALE OR USE NATIONWIDE ON ANY FEDERAL POLLUTION CONTROLLED MOTOR VEHICLE UNDER THE CLEAN AIR ACT

# STANDARD REPLACEMENT FILTERS

**STANDARD REPLACEMENT AIR FILTERS**

| Description | Fitment | Part # |
|---|---|---|
| Standard Filter Only | Classic Teardrop | **106-4722** |
| | Stealth | **170-0126** |

# PERFORMANCE KIT OVERVIEW FOR HD® EVOLUTION® BIG TWIN ENGINES



## SIDEWINDER® KITS

S&S 3⅜" big bore/stroker kits are available from 88" to 103" displacement (See PAGE 22). We recommend the 96" kit for most applications, and it is our most popular. The 96" Sidewinder is also available as a Hot Set Up Kit, which includes the extra performance goodies you need to make the most of the increased displacement. (See PAGE 23).



## 96" HOT SET UP KITS

The S&S 96" Hot Set Up Kit is built around our most popular 3⅜" bore Sidewinder® kit. In addition to the standard flywheel assembly, cylinders, and pistons, the 96" Hot Set Up Kit includes S&S a cam shaft, carb, pushrods, and all required hardware and gaskets. The top of the line Hot Set Up Kit also includes S&S Super Stock® cylinder heads. Kits for stock heads include S&S valve springs to accommodate the high lift cam. Configure your own Hot Set Up Kit with the CTO Part #. (See PAGE 23).



## 89" STOCK BORE STROKER

S&S has been making stock bore stroker kits since the early 1960s. They're still popular today due to the excellent power gains for the money, as well as the easy installation. Stock bore strokers reuse the stock cylinders and crankcase, so the kits are economical to buy. Since they don't require expensive crankcase modifications, they are also economical to install (See PAGE 24). To ensure maximum performance, we suggest the 89" Stroker Hot Set Up Kit that also includes an S&S camshaft, carb, pushrods, and S&S cylinder heads. Configure your own Hot Set Up Kit with the CTO Part #.



## 80" HOT SET UP KITS

Boost your performance without splitting your crankcases with the 80" Hot Set Up Kit. The kit includes S&S Super Stock® cylinder heads, cam, carb, pushrods and gaskets. Installation is no more difficult than a stock top end job. Purchase pistons of the required oversize separately.(See PAGE 25).

**PERFORMANCE KIT SPECIFICATIONS FOR HARLEY-DAVIDSON® EVOLUTION® BIG TWIN ENGINES**

| KIT DESCRIPTION | BORE | STROKE | COMPRESSION RATIO | | | | CAMSHAFT | HP | TORQUE |
|---|---|---|---|---|---|---|---|---|---|
| | | | Stock Heads | Performance Replacement Heads 76cc | Performance Replacement Heads 82cc | S&S® Super Stock® Heads | | S&S Heads | |
| Sidewinder® Kit | 3 ⅜" | * | * | * | * | * | – | * | * |
| 96" Hot Set Up Kit | 3 ⅜" | 4 ⅝" | 9.25 | 10:1 | 9.5:1 | 10.2:1 | 585 | 99.5 | 109.9 |
| 89" Stroker Kit | 3 ½" | 4 ⅝" | 9.25 | 9.4:1 | 8.9:1 | 10:1 | – | 95.0 | 97.6 |
| 89" Stroker Hot Set Up Kit | 3 ½" | 4 ⅝" | 9.25:1 | 9.4:1 | 8.9:1 | 10:1 | 561 | 95.0 | 97.6 |
| 80" Hot Set Up Kit | 3 ½" | 4 ¼" | – | – | – | 10.2:1 | 561 | 83.0 | 85.5 |

**Specifications depend on kit selected. See PAGE 22.*

**PERFORMANCE KIT CONTENTS, OPTIONS AND REQUIREMENTS FOR HARLEY-DAVIDSON® EVOLUTION® BIG TWIN ENGINES**

| KIT DESCRIPTION | PACKAGE CONTENTS | | | | | | | | MACHINING REQUIRED | CTO OPTIONS | REJETTING OR CALIBRATION CHANGE |
|---|---|---|---|---|---|---|---|---|---|---|---|
| | Flywheels | Cylinders | Pistons w/rings | Pushrods | Camshaft | Valve Springs | Heads w/ springs | Gaskets | | | |
| Sidewinder® Kit** | | • | • | | | | ❶ | • | ❸❹ | | • |
| 96" Hot Set Up Kit | • | • | • | • | • | • | ⓪ | • | ❸❹ | ❺❻❼ | • |
| 89" Stroker Kit | • | ❼ | ❶ | | | | ❶ | | ❷❸ | | • |
| 89" Stroker Hot Set Up Kit | • | ❼ | ❶ | • | • | • | ⓪ | • | ❷❸ | ❺❻❼ | • |
| 80" Hot Set Up Kit | | ❼ | ❶ | • | • | | • | • | ❷ | | • |

⓪ = Optional
❶ = Order separately
❷ = Bore & hone cylinders
❸ = Crankcase machining crankpin clearance
❹ = Crankcase machining for cylinder spigots
❺ = Camshaft selection
❻ = Combustion chamber size selection
❼ = Cylinder & piston set available

**The CTO option column lists only the major items offered. Virtually any option can be selected from our product offerings through the Configure To Order (CTO) program.*
***Specifications depend on kit selected*

# SIDEWINDER® KITS

## FITMENT

- 1984–'99 carbureted
- 1995–'98 EFI engines

## FEATURES AND BENEFITS

- Large displacement at a relatively small price
- Significant increase in horsepower and torque

## OPTIONS

- 96" displacements available
- Top end kits for 80" engines and engines with S&S 89" stroker kits
- Valve train items — Cams, tappets, valve springs, rocker arms, rocker covers
- Fuel systems — Manifolds, carburetors, EFI throttle bodies, EFI modules
- Factory installation available



**91-7660**

| COMPLETE S&S® SIDEWINDER® KITS FOR HARLEY-DAVIDSON® EVOLUTION® BIG TWIN ENGINES SPECIFICATIONS | | | |
|---|---|---|---|
| **Displacement** | **Stroke** | **Compression Ratio** | **Cylinder Length** |
| 96" | 4⅜" | 9.75:1 | 5.565" |

| COMPLETE S&S® SIDEWINDER® KITS FOR HARLEY-DAVIDSON® EVOLUTION® BIG TWIN ENGINES | |
|---|---|
| **Finish** | |
| **Natural** | **91-7202*** |
| | **91-7660** |
| **Wrinkle Black** | **91-7702*** |
| | **91-7661** |

**Denotes big bore Top End Kit only.*

DISCLAIMER: NOT LEGAL FOR SALE OR USE IN CALIFORNIA ON ANY POLLUTION CONTROLLED MOTOR VEHICLE. NOT LEGAL FOR SALE OR USE NATIONWIDE ON ANY FEDERAL POLLUTION CONTROLLED MOTOR VEHICLE UNDER THE CLEAN AIR ACT

***NOTES:*** Cases must be bored to accept 3⅝" bore cylinders, and a minor crankcase clearancing operation for the crankpin nut must be performed.

***Extra parts needed:*** 1977–'89 style pinion gear and oil pump drive Gears must be used when installing S&S flywheels in 1990–'99 engines.

# 96" HOT SET UP KIT®

## FITMENT

- 1984–'99 carbureted engines
- 1995–'98 EFI engines

## FEATURES AND BENEFITS

- Economical route to a large displacement motor
- Enhance performance with the addition of S&S® Super Stock® cylinder heads
- Includes a 96" Sidewinder® kit with 4⅝" stroker flywheels assembled with mainshafts and rods, 3⅝" bore cylinder and piston kit, an S&S 585 cam, .585" valve springs, adjustable chromoly pushrods, an $HL_2T$ kit, a Super E carb kit, and installation instructions

## OPTIONS

- Kits are available with S&S Super Stock® heads or without heads if S&S Performance Replacement heads or stock heads will be used

**S&S® 96" HOT SET UP KIT® SPECIFICATIONS**

| Displacement | Stroke | Bore | Compression Ratio | | | Piston Type | Cylinder Length |
|---|---|---|---|---|---|---|---|
| | | | Stock Heads | S&S Super Stock Heads | S&S 82cc Performance Replacement Heads | | |
| 96" | 4⅝" | 3⅝" | 9.75:1 | 10.1:1 | 9.5:1 | Forged | 5.565" |

### 96" HOT SET UP KIT® WITHOUT HEADS FOR HARLEY-DAVIDSON® EVOLUTION® ENGINES

| Year Group | Stroke | Fuel Delivery | Cam | Finish | Part # |
|---|---|---|---|---|---|
| 1984–'92 bt | 4⅝" | Super E | 585 | Wrinkle Black | **32-2298** |
| 1993–'99 bt | 4⅝" | Super E | 585 | Natural | **32-2297** |
| | | | | Wrinkle Black | **32-2299** |



**32-2297**

DISCLAIMER: NOT LEGAL FOR SALE OR USE IN CALIFORNIA ON ANY POLLUTION CONTROLLED MOTOR VEHICLE. NOT LEGAL FOR SALE OR USE NATIONWIDE ON ANY FEDERAL POLLUTION CONTROLLED MOTOR VEHICLE UNDER THE CLEAN AIR ACT

### 96" HOT SET UP KIT® WITH S&S® SUPER STOCK® HEADS FOR HARLEY-DAVIDSON® EVOLUTION® ENGINES

| Year Group | Stroke | Fuel Delivery | Cam | Finish | Part # |
|---|---|---|---|---|---|
| 1993–'99 bt | 4⅝" | Super E | 585 | Natural | **90-0122** |
| | | | | Wrinkle Black | **90-0123** |



**90-0122**

DISCLAIMER: NOT LEGAL FOR SALE OR USE IN CALIFORNIA ON ANY POLLUTION CONTROLLED MOTOR VEHICLE. NOT LEGAL FOR SALE OR USE NATIONWIDE ON ANY FEDERAL POLLUTION CONTROLLED MOTOR VEHICLE UNDER THE CLEAN AIR ACT

***NOTE: IMPORTANT:*** 1977–'89 style pinion gears, spacer, and nut are required when installing S&S flywheel assemblies. For installation in 1990–'99 or scratch built engines, order S&S Pinion Shaft Conversion Kit 33-4148.

# 89" STROKER KIT

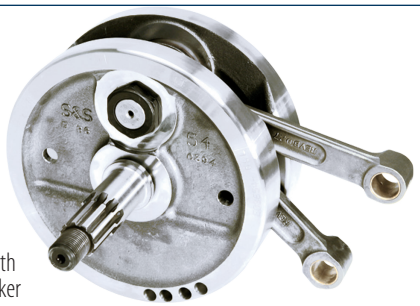

## FITMENT

- 1984–'99 carbureted engines
- 1995–'98 EFI engines

## FEATURES AND BENEFITS

- Stock, S&S Super Stock® or performance replacement heads can be used with this configuration, depending on which pistons are purchased with the stroker flywheels.
- 89" strokers can be installed in carbureted or fuel injected engines. Note that recalibration of the fuel injection system is required.
- Requires a simple crankcase clearance operation and normal piston fitting.
- Low cost boost in performance — Add S&S 3⅝" cylinders later for 96" engine

### FLYWHEEL ASSEMBLIES FOR S&S® 89" STOCK BORE STROKER KITS FOR HARLEY-DAVIDSON® EVOLUTION® ENGINES

| Application | Part # |
|---|---|
| Carbureted | **32-2230** |
| Fuel Injected | **32-2146** |

### S&S® 89" STOCK BORE STROKER KITS FOR HARLEY-DAVIDSON® EVOLUTION® ENGINES SPECIFICATIONS

| Displacement | Stroke | Bore | Compression Ratio* | Piston Type | Cylinder Length |
|---|---|---|---|---|---|
| 89" | 4⅝" | 3½" | 9.25:1 | Forged | Stock |

**Compression ratio with stock heads.*
*1990 and later installations require 1977 to 1989 pinion shaft gears. Kit 33-4148 includes cam and oil pump drive gears, spacer and nut.*

**THESE KITS REQUIRES SPECIAL S&S PISTONS. Order the required piston oversize from the chart below.**



106-5554

### 3½" BORE FORGED STROKER PISTON KITS FOR STOCK HEADS OR S&S PERFORMANCE REPLACEMENT HEADS

| Standard | +.010" | +.020" | +.030" |
|---|---|---|---|
| **106-5554** | **106-5555** | **106-5556** | **106-5793** |

*Piston kits include set of pistons, rings, wristpins, and clips. Recommended cast piston fitment: Close: 0.0008" – 0.0013" Loose: 0.0020" – 0.0025"*

### 3½" BORE FORGED PISTON KITS FOR S&S® SUPER STOCK® HEADS

| Displacement | Stroke | Piston Deck Height | CR | Standard | +0.010" | +0.020" |
|---|---|---|---|---|---|---|
| 89" LC | 4⅝" | 1.1875" | 10:1 | **92-2046** | **92-2047** | **92-2048** |
| 89" HC | 4⅝" | 1.1875" | 12.2:1 | **92-2016** | **–** | **92-2018** |

*Piston kits include set of pistons, rings, wristpins, and clips. Recommended cast piston fitment: Close: 0.0008" – 0.0013" Loose: 0.0020" – 0.0025"*

***NOTES:*** If ordering replacement pistons for an older 89" Stroker Kit, the flywheels will require rebalancing.
S&S Super Stock cylinder heads do not have provision for the stock head temperature sensor. For this reason they are not compatible with fuel injected applications. Fuel injected stroker engines must use stock cylinder heads or S&S performance replacement heads. (See PAGE 52)

# 80" HOT SET UP KIT®



## FITMENT

- 1984–'99 carbureted engines

## FEATURES AND BENEFITS

- Installation is as easy as a stock top-end rebuild
- Flywheel rebalancing is not required
- Yields 80 cubic inches at 10.2:1 compression ratio with included S&S cylinder heads
- Includes S&S Super Stock cylinder head kit with valves and springs installed, manifold with o-rings and flanges, required hardware, top end gaskets, an S&S 561 cam, adjustable chromoly pushrods, an $HL_2T$ kit, a Super E carb kit, and installation instructions
- Pistons of the required oversize must be ordered separately. Pistons fitted to S&S cylinders are also available

| S&S® 80" HOT SET UP KIT® FOR HARLEY-DAVIDSON® EVOLUTION® ENGINES SPECIFICATIONS | | | | | |
|---|---|---|---|---|---|
| Displacement | Stroke | Bore | Compression Ratio | Piston Type | Cylinder Length |
| 80" | 4¼" | 3½" | 10.2:1 | Forged | Stock |

### 80FLSS HOT SET UP KITS® WITH SUPER STOCK® CYLINDER HEADS FOR CARBURETED HD® EVOLUTION® BIG TWINS

| Model Year | Wrinkle Black | Natural |
|---|---|---|
| 1984–'92 | **90-0083** | **90-0081** |
| 1993–'99 | **90-0084** | **90-0082** |

DISCLAIMER: NOT LEGAL FOR SALE OR USE IN CALIFORNIA ON ANY POLLUTION CONTROLLED MOTOR VEHICLE. NOT LEGAL FOR SALE OR USE NATIONWIDE ON ANY FEDERAL POLLUTION CONTROLLED MOTOR VEHICLE UNDER THE CLEAN AIR ACT



**THESE KITS REQUIRES SPECIAL S&S PISTONS.** Order the required piston oversize from the chart below.

| 92-2026 SERIES PISTONS FOR S&S® 80" HOT SET UP KITS® 10:1 COMPRESSION | | | | | CYLINDER & PISTON KIT | |
|---|---|---|---|---|---|---|
| Standard | +.0005" | +.010" | +.020" | +.030" | Natural | Wrinkle Black |
| **92-2026** | **92-20265** | **92-2027** | **92-2028** | **92-2029** | **91-7213** | **91-7713** |

# ENGINE OVERVIEW

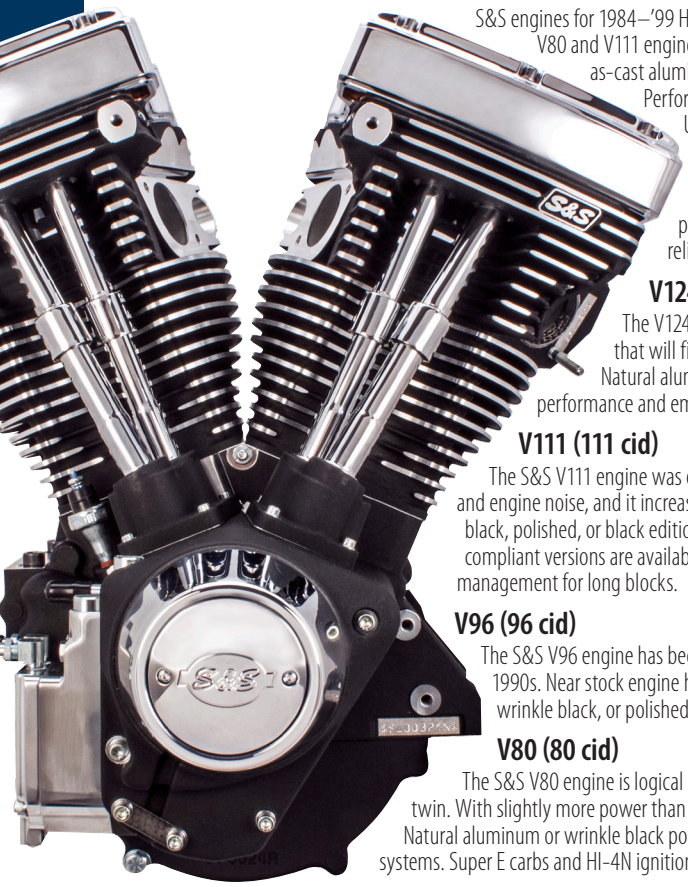

S&S engines for 1984–'99 Harley Davidson® big twins with carbureted Evolution® engines are available as complete engines. V80 and V111 engines are also available as long blocks, with no fuel or ignition systems. Choose from natural, as-cast aluminum finish, wrinkle black powder coat, or Black Edition finishes. In addition to the S&S line of Performance Engines, emissions compliant engines are available that meet EPA, CARB, and European Union requirements for certain models.

## BLACK EDITION

S&S Cycle's new Black Edition engines combine classic wrinkle black with high gloss black powder coated covers for a subtle contrast and elegant look while still producing the power and reliability you've come to expect.

## V124 (124 CID)

The V124 engine first appeared in the S&S Catalog in 2002, and being the biggest engine we make that will fit in a stock frame for this year group, has been the go-to engine for daily rider hot rods. Natural aluminum, wrinkle black powder coat, or polished finishes. Available as a complete engine only in performance and emissions compliant versions.

## V111 (111 cid)

The S&S V111 engine was engineered to be the ultimate sport touring engine. The shorter stroke produces less vibration and engine noise, and it increases engine life. The 111 cid produces plenty of power. Available in natural aluminum, wrinkle black, polished, or black edition finishes. Performance versions are available as long blocks or complete engines. Emissions compliant versions are available as complete engines only. Super E carbs and HI-4N ignition modules are recommended engine management for long blocks.

## V96 (96 cid)

The S&S V96 engine has been a popular choice with performance riders and builders since it was introduced in the mid-1990s. Near stock engine height makes it easy to install, and there's plenty of power to pass. Available in natural aluminum, wrinkle black, or polished finishes. Complete engines only. Performance and emissions compliant versions are available.

## V80 (80 cid)

The S&S V80 engine is logical choice for riders who just want to repower their trusty Evolution® powered Harley-Davidson® big twin. With slightly more power than a stock 80" engine, the V80 offers great engine life, low vibration, and trouble free operation. Natural aluminum or wrinkle black powder coat finishes. Available as a complete engine or as a long block, without fuel or ignition systems. Super E carbs and HI-4N ignition modules are recommended engine management for long blocks.

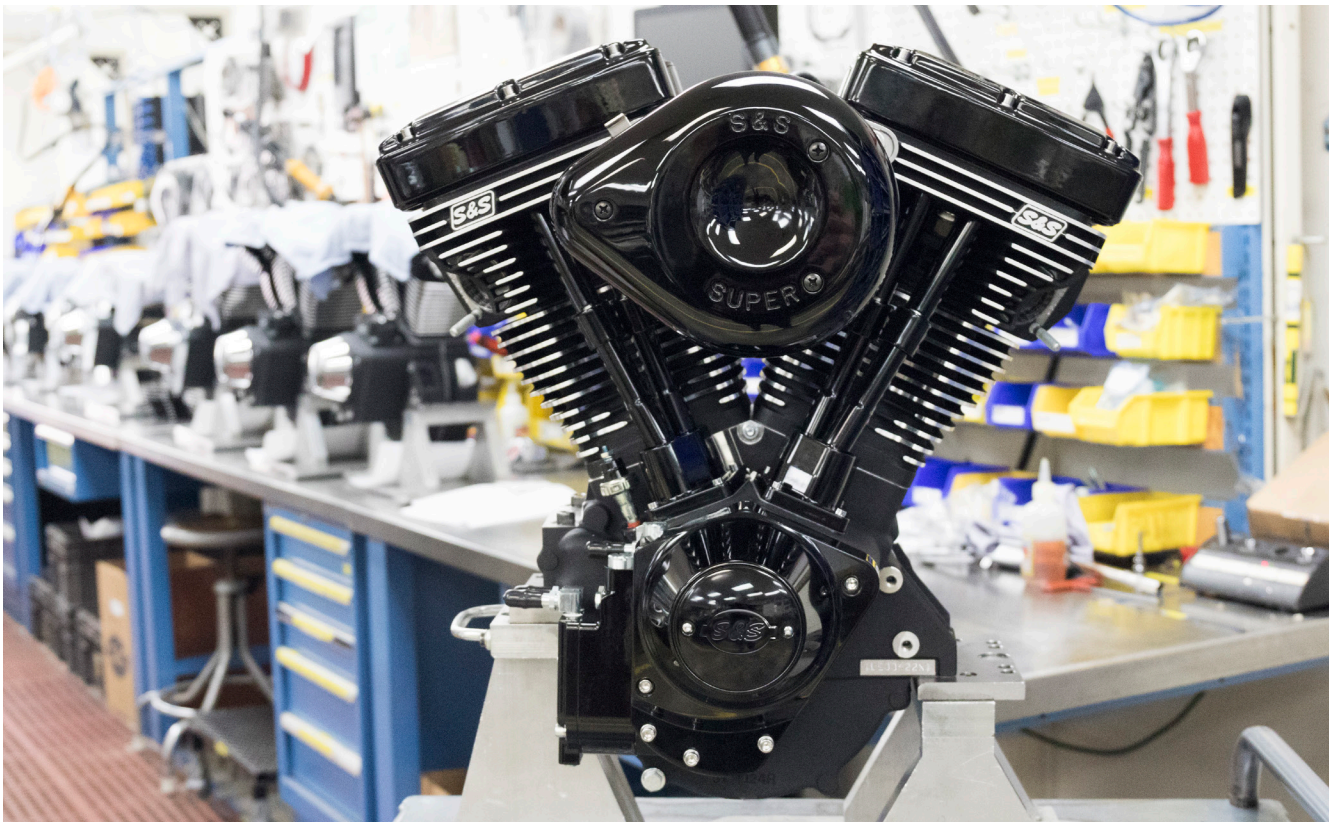

# V124 ENGINES

## FITMENT
- 1984–'99 carbureted chassis
- Custom chassis designed for Harley-Davidson® Evolution® engines

## FEATURES AND BENEFITS
- Long piston stroke and high performance gear driven cam result in large horsepower increase over stock engine
- 1.671" diameter crankpin
- .927" wristpin
- Piston cooling jets
- Large fin pack—heads and cylinders
- Press together crankshaft
- 3 Piece Flywheel
- HVHP oil pump
- Electric compression release – easy starting under any circumstance
- Natural, Wrinkle Black (Wrinkle Black) powder coat, and polished finish. Diamond cut black powder coat, fully polished, and diamond cut fully polished finishes are available, but have longer lead times
- Chrome gearcover, tappet covers, and rocker covers

## CARBURETED ENGINES
- S&S Super G carburetor with slotted Slasher air cleaner cover
- Super Stock® ignition system

## FUEL INJECTION ENGINES
- Single bore EFI throttle body with S&S Classic Teardrop air cleaner
- Closed loop fuel system, dual oxygen sensors provide air-fuel ratio feedback for correct fuel delivery under any condition
- Included S&S ProTune II software provides base fuel maps for most aftermarket exhaust systems

NOTE: **EFI models available by special order



31-9886

| S&S® V124 ENGINE SPECIFICATIONS | | | | | |
|---|---|---|---|---|---|
| Displacement | Bore | Stroke | Cam | Piston Type | Compression Ratio |
| 124" | 4⅛" | 4⅝" | 640 | S&S forged | 10.8:1 |

***NOTES:*** If an aftermarket exhaust or intake system is used, the fuel maps must be modified. It is highly recommended that this tuning be done by a certified S&S® VFI tuning center. Visit our website at sscycle.com to locate your nearest certified S&S VFI tuning center. S&S VFI tune files can also be found on our web page and are available for many common exhaust systems.

**V124 ENGINES±**

| Chassis Style | Fuel Delivery | Ignition | Warranty Period | Finish | Part # |
|---|---|---|---|---|---|
| 1984–'99 Carb | S&S® Super G Carb | Super Stock® | 2 Year | Black Edition | **310-0925** |
| | | | | Natural | **31-9860** |
| | | | | Wrinkle Black | **31-9885** |
| | | | | Polished | **31-9886** |
| CTO | Specify | Specify | Varies | Specify | **319-0008** |

DISCLAIMER: NOT LEGAL FOR SALE OR USE IN CALIFORNIA ON ANY POLLUTION CONTROLLED MOTOR VEHICLE. NOT LEGAL FOR SALE OR USE NATIONWIDE ON ANY FEDERAL POLLUTION CONTROLLED MOTOR VEHICLE UNDER THE CLEAN AIR ACT

± WARNING: Cancer and Reproductive Harm – www.P65Warnings.ca.gov

# V111 ENGINES

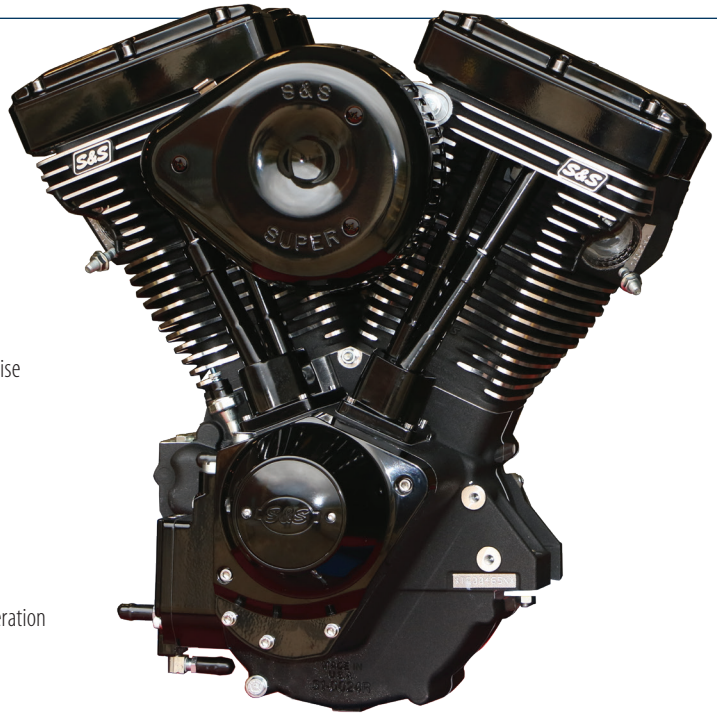


## FITMENT
- 1984–'99 carbureted chassis
- Custom chassis designed for Evolution® engines

## FEATURES AND BENEFITS
- Short stroke produces less vibration and longer engine life
- Large cooling fins - increases cooling efficiency
- HVHP (High Volume High Pressure) oil pump
- S&S 585 cam and lightweight single coil valve springs minimize valve train noise
- S&S forged rocker arms
- Shorter than stock height engine makes installation easy
- Chrome plated rocker covers, tappet guides, and gearcover

## CARBURETED ENGINES (1984–'99)
- S&S Super E carburetor with Classic Teardrop air cleaner

**Super Stock® ignition system**
- Protects engine with a 3-step break-in rev-limiter during first 24-hours of operation
- Initially configured for electric start, however, it is kick-start capable
- Two-year warranty

**S&S® V111 ENGINE SPECIFICATIONS**

| Displacement | Bore | Stroke | Cam | Piston Type | Compression Ratio |
|---|---|---|---|---|---|
| 111" | 4⅛" | 4⅛" | 585 | S&S forged | 9.8:1 |

**COMPLETE ENGINE REBUILD GASKET KITS**

| S&S Engine Family | Year Group | Bore Size | Part # |
|---|---|---|---|
| V-Series | 1984–'99 | 4⅛" | **106-0964** USA |

**V111 ENGINES±**

| Chassis Style | Fuel Delivery | Ignition | Warranty | Finish | Part # |
|---|---|---|---|---|---|
| 1984–'99 Carb | S&S Super E Carburetor | Super Stock® | 2 Year | Black Edition | **310-0828** |
| | | | | Natural | **106-5703** |
| | | | | Wrinkle Black & Chrome | **106-5704** |
| | | | | Polished | **310-0385** |
| CTO | Specify | Specify | Varies | Natural or Wrinkle Black Finish | **319-0008** |

DISCLAIMER: NOT LEGAL FOR SALE OR USE IN CALIFORNIA ON ANY POLLUTION CONTROLLED MOTOR VEHICLE. NOT LEGAL FOR SALE OR USE NATIONWIDE ON ANY FEDERAL POLLUTION CONTROLLED MOTOR VEHICLE UNDER THE CLEAN AIR ACT

± WARNING: Cancer and Reproductive Harm – www.P65Warnings.ca.gov

# V96 ENGINES

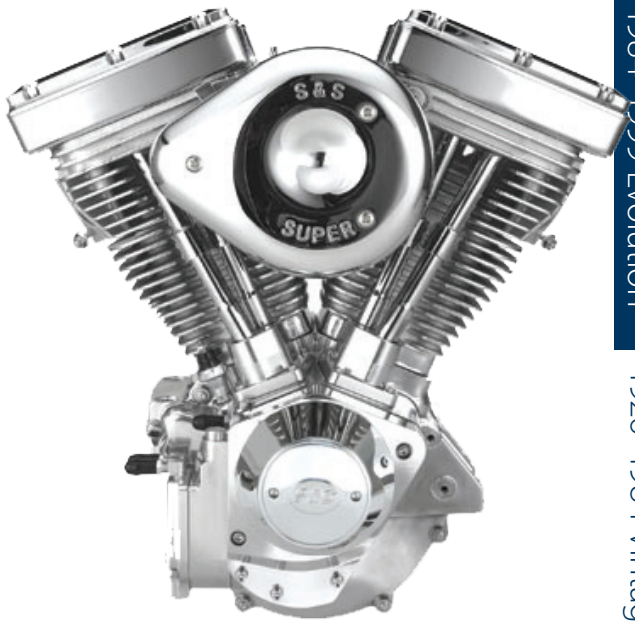

## FITMENT

- 1984–'99 carbureted chassis
- Custom chassis designed for Evolution® engines

## FEATURES AND BENEFITS

- Nearly stock height engine makes installation easy (+.015")
- S&S Super E carburetor with Classic Teardrop air cleaner cover
- S&S 585 cam and lightweight single coil valve springs reduce engine noise
- S&S forged rocker arms
- Chrome plated rocker covers, tappet guides, and gearcover

### Super Stock® ignition

- Protects engine with a 3-step break-in rev-limiter during first 24 hours of operation
- Initially configured for electric start, however it may be switched to kick-start mode
- Two-year warranty

| S&S® V96 ENGINE SPECIFICATIONS | | | | | |
|---|---|---|---|---|---|
| Displacement | Bore | Stroke | Camshaft | Piston Type | Compression Ratio |
| 96" | 3⅜" | 4⅝" | 585 | S&S flat top forged | 9.5:1 |

### V96 ENGINES±

| Chassis Style | Fuel Delivery | Ignition | Warranty | Natural | Wrinkle Black | Polished |
|---|---|---|---|---|---|---|
| 1984–'99 Carb | S&S Super E Carb | Super Stock® | 2 Years | **31-9955** | **31-9956** | **31-9957** |

DISCLAIMER: NOT LEGAL FOR SALE OR USE IN CALIFORNIA ON ANY POLLUTION CONTROLLED MOTOR VEHICLE. NOT LEGAL FOR SALE OR USE NATIONWIDE ON ANY FEDERAL POLLUTION CONTROLLED MOTOR VEHICLE UNDER THE CLEAN AIR ACT

±⚠ WARNING: Cancer and Reproductive Harm – www.P65Warnings.ca.gov

### COMPLETE ENGINE REBUILD GASKET KITS

| S&S Engine Family | Year Group | Bore Size | Part # |
|---|---|---|---|
| V-Series | 1984–'99 | 3⅜" | **106-0992** USA |

# V80 ENGINES



## FITMENT

- 1984–1999 carbureted

## FEATURES & BENEFITS

- Adjustable pushrods
- Standard forged rocker arms
- High performance hydraulic lifters
- .585" lift single coil valve springs
- Flat top cast pistons
- 508 cam
- Performance replacement heads
- Complete engine with an S&S Super E carb and ignition

| S&S® V80 ENGINE SPECIFICATIONS | | | | | |
|---|---|---|---|---|---|
| Displacement | Bore | Stroke | Camshaft | Piston Type | Compression Ratio |
| 80" | 3½" | 4¼" | 508 | Cast | 8.4:1 |

### V80 ENGINES±

| Chassis Style | Fuel Delivery | Ignition | Warranty | Natural | Wrinkle Black |
|---|---|---|---|---|---|
| 1984–1999 | Super E | Super Stock | 2 years | **310-0237** | **310-0238*** |

**EFI Compatible*

DISCLAIMER: NOT LEGAL FOR SALE OR USE IN CALIFORNIA ON ANY POLLUTION CONTROLLED MOTOR VEHICLE. NOT LEGAL FOR SALE OR USE NATIONWIDE ON ANY FEDERAL POLLUTION CONTROLLED MOTOR VEHICLE UNDER THE CLEAN AIR ACT

±⚠ WARNING: Cancer and Reproductive Harm – www.P65Warnings.ca.gov

### COMPLETE ENGINE REBUILD GASKET KITS

| S&S Engine Family | Year Group | Bore Size | Part # |
|---|---|---|---|
| V-Series | 1984–'99 | 3½" | **310-0928** |

# V-SERIES LONG BLOCKS

Why rebuild that old stock engine? Upgrade, and replace it with an all-new S&S® V111 or V80 engine. Get a 2-year warranty and a lot more power!

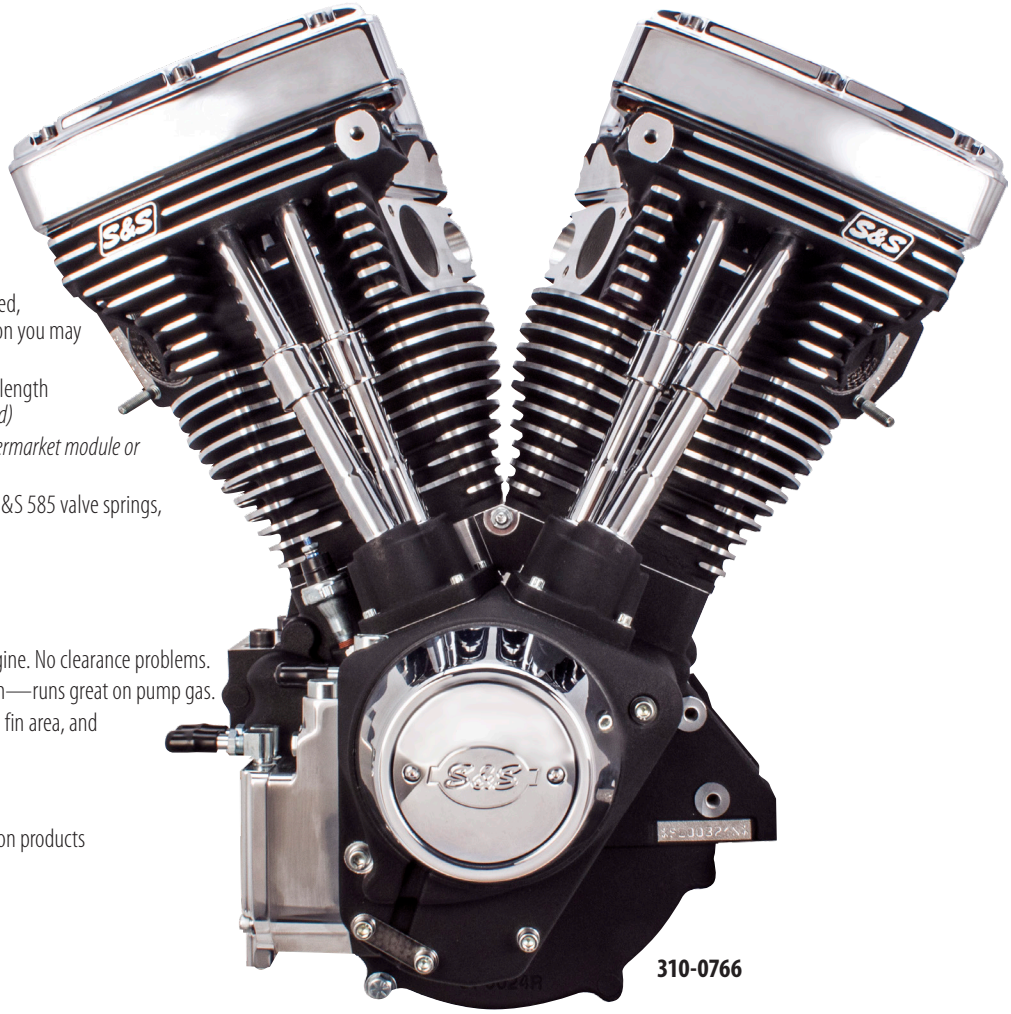

310-0766

## FITMENT

- 1984–'99 Harley-Davidson® big twin chassis and custom frames designed for Evolution® big twin engines.

## FEATURES AND BENEFITS

- Save time — Replacement is faster than rebuilding.
- Save money — Fuel and ignition systems not included, use the carburetor, air cleaner, and aftermarket ignition you may already have.
- Specially machined cylinder heads allow use of stock length manifolds. Use your existing carb *(re-jetting is required)*
- EFI compatible — Calibration required *(must use aftermarket module or add-on tuner).*
- Premium S&S Components — S&S cylinder heads, S&S 585 valve springs, forged rocker arms
- Made in the USA!

## V111

- Easy Installation — Actually shorter than a stock engine. No clearance problems.
- More Power — 111 cubic inches at 9.8:1 compression—runs great on pump gas.
- Superior Cooling — S&S big-fin cylinders with more fin area, and exclusive oil jets to cool the bottom of the pistons.
- S&S HVHP oil pump.

For maximum performance, the following fuel and ignition products are recommended:

## CARBURETED APPLICATIONS

- S&S Super E Carb Kit—11-0419
- S&S HI-4N Ignition Module Only—550-0501
- S&S HI-4N Ignition, complete Kit—550-0502

## SUGGESTED ACCESSORIES

- Stealth Air Cleaner Kits. See PAGE 16

### V-SERIES LONG BLOCK ENGINES±

| Displacement | Bore | Stroke | Camshaftt | Piston Type | Compression Ratio | Warranty | Finish | Part # |
|---|---|---|---|---|---|---|---|---|
| V111 | 4⅛" | 4⅛" | 585 | Forged | 9.8:1 | 2 Year | Wrinkle Black | **310-0766** |
| | | | | | | | Black Edition | **310-0829** |
| V80 | 3½" | 4¼" | 508 | Cast | 8.4:1 | 2 Year | Wrinkle Black | **310-0233** |
| | | | | | | | Natural | **310-0232** |

DISCLAIMER: NOT LEGAL FOR SALE OR USE IN CALIFORNIA ON ANY POLLUTION CONTROLLED MOTOR VEHICLE. NOT LEGAL FOR SALE OR USE NATIONWIDE ON ANY FEDERAL POLLUTION CONTROLLED MOTOR VEHICLE UNDER THE CLEAN AIR ACT

± ⚠ WARNING: Cancer and Reproductive Harm – www.P65Warnings.ca.gov

# 49-STATE EPA ENGINES

Certified for "new build" bikes, S&S offers two options for 49-state EPA engine packages.

## FITMENT

- Aftermarket frames with motor mounts for 1984–'99 big twins

## FEATURES AND BENEFITS

- 49-state emissions legal
- S&S Delphi® style EFI with Classic Teardrop air cleaner cover
- Chrome gearcover, tappet covers, and rocker covers
- Includes all required certification, documentation and labels
- Two-year warranty

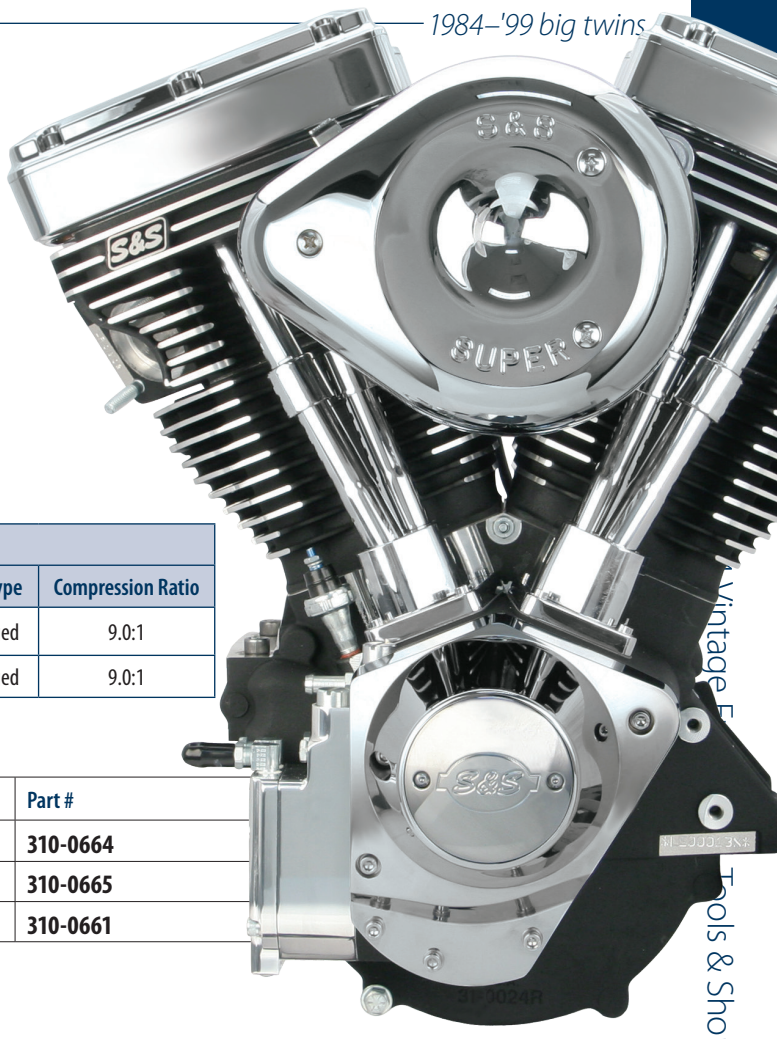


**S&S® V-SERIES 49-STATE EPA ENGINE SPECIFICATIONS**

| Engine Name | Displacement | Bore | Stroke | Camshaft | Piston Type | Compression Ratio |
|---|---|---|---|---|---|---|
| V124ei | 124" | 4 1⁄8" | 4 5⁄8" | 543 | S&S Forged | 9.0:1 |
| V111ei | 111" | 4 1⁄8" | 4 1⁄8" | 543 | S&S Forged | 9.0:1 |

**V-SERIES 49-STATE EPA ENGINES±**

| Engine Name | Chassis Style | Fuel Delivery | Warranty | Finish | Part # |
|---|---|---|---|---|---|
| V124ei | 1984–'99 carb | EFI | 2 years | Black | **310-0664** |
| | | | | Polished | **310-0665** |
| V111ei | 1984–'99 carb | EFI | 2 years | Black | **310-0661** |

±⚠WARNING: Cancer and Reproductive Harm – www.P65Warnings.ca.gov

***NOTE:*** These engines are not to be used in a previously certified vehicle or a custom motorcycle built from a previously certified vehicle.
S&S 49-state engine packages are only available through S&S dealers and select distributors.
Requirements for bikes built with S&S EPA certified engine packages:
Vehicles must have a maximum N/V ratio* of no greater than 43.3 for V-Series engines.
Maximum vehicle curb mass for V124E and V111E engines is 1058 lbs.
Exhaust system selected must create back pressure within the specified limits. Min. 3" H20, Max. 21" H20
**Engine rpm divided by miles per hour in top gear.*

# 50-STATE LEGAL ENGINES




## FITMENT

- V96R—1984–'98 carbureted, non catalyst bikes
- V111ci—1984–'99 style custom big twin chassis

## V96R FEATURES AND BENEFITS

- Nearly stock height engine makes installation easy
- S&S Super E carburetor with Classic Teardrop air cleaner
- S&S forged roller rocker arms
- Chrome rocker covers
- No certification problems—documentation and compliance stickers included
- Exempt from emissions tampering regulations under CARB EO# D-355-5 when used in 1984-1998 carbureted, non-catalyst, big twin powered models

## *V111CI FEATURES AND BENEFITS*

- 50-state emissions legal
- S&S Super E or G carburetor with Classic Teardrop air cleaner cover
- Chrome gearcover, tappet covers, and rocker covers
- Super Stock® ignition system protects engine with a low rev-limiter during first 24 hours of operation
- Initially configured for electric start, however, it is kick start capable
- Carbon canister
- Vapor valve
- Non-permeable installation tubing
- Instructions and all required documentation
- Two-year warranty

**S&S® V-SERIES 50-STATE LEGAL ENGINE SPECIFICATIONS**

| Engine Name | Displacement | Bore | Stroke | Camshaft | Piston Type | Compression Ratio |
|---|---|---|---|---|---|---|
| V96R | 96" | 3⅝" | 4⅝" | 520 | S&S Forged | 10.1:1 |

CARB compliant
EO #D-355-5

**V-SERIES 50-STATE LEGAL ENGINES**

| Engine Name | Chassis Style | Fuel Delivery | Ignition | Warranty Period | Finish | Part # |
|---|---|---|---|---|---|---|
| V111ci | 1984–'99 carb | S&S EFI | S&S VFI | 2 years | Wrinkle Black | **310-0673** |
| V96R | 1984–'98 carb | Super E Carb | Super Stock® | 2 years | Wrinkle Black | **31-9156±*** |
| | | | | | Natural | **31-9155±*** |
| V80R | 1984–'98 carb | Super E Carb | Super Stock® | 2 years | Wrinkle Black | **31-9150** |

Exempt from emissions tampering regulations under CARB EO# D-355-5 when used in 1984-1998 carbureted, non-catalyst, big twin powered models

± WARNING: Cancer and Reproductive Harm – www.P65Warnings.ca.gov

***NOTES:***

***V96R***

Gearing must be stock or have an N/V Ratio*lower than stock.

A stock non-catalyst exhaust system must be used.

The stock evaporative system must be retained and connected to the engine as shown in the manual.

S&S® replacement engines are only for use as a replacement engine in 1984-'98 Harley-Davidson motorcycles originally equipped with a carbureted, non-catalyst, big twin Evolution® engine. They may not be used in any new or previously registered custom motorcycles.

**Engine rpm divided by miles per hour in top gear.*

This replacement engine is only legal when used to replace a stock 80" Evolution® engine. CARB compliance stickers must be affixed to frame.

***V111C/V124C***

Vehicles must have a maximum N/V ratio*of no greater than 43.3 for V-Series engines.

Maximum vehicle curb mass for V111ci engines is 1058 lbs.

Exhaust system selected must create back pressure within the specified limits. Min. 3" H20, Max. 21" H20

Builder must return the included agreement form and required photographs of the vehicle to S&S before a manufacturer's statement of origin (MSO) for the engine can be issued.

Until the MSO is issued, the vehicle is not considered to be certified and the MSO is required to title a custom vehicle.

Maximum fuel capacity is five gallons.

**Engine rpm divided by miles per hour in top gear.*

# SHORT BLOCK ASSEMBLIES

Replace your entire stock lower end with an S&S Short Block assembly! A rock solid S&S flywheel assembly, installed in a set of bullet proof S&S Super Stock® crankcases.

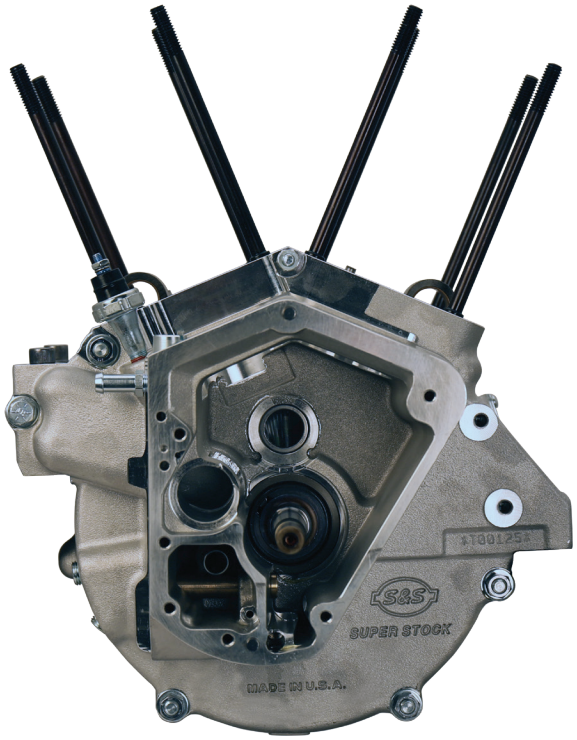


## FITMENT

- 1984–'99 Carbureted and Fuel Injected 80" Evolution® big twin

## FEATURES AND BENEFITS

- Stock 3½" bore and 4¼" stroke
- Premium quality U.S. made S&S components
- Compatible with all stock and most aftermarket parts
- Full one year parts warranty
- Includes certificate of origin for new crankcases

CARB compliant
EO #D-355-19

### SHORT BLOCK ASSEMBLIES±

| Chassis Style | Bore | Stroke | Warrany Period | Finish | Part # |
|---|---|---|---|---|---|
| 1984–'91 big twins | 3 ½" | 4 ¼" | One year parts only | Natural | **310-0780A** |
| | | | | Wrinkle Black | **310-0801A** |
| 1992–'99 big twins | | | | Natural | **310-0781A** |
| | | | | Wrinkle Black | **310-0802A** |

*1977–'89 style pinion gears, spacers, and nuts are required when installing S&S flywheel assemblies.*
*For installation in 1990–'99 or scratch built engines, order S&S Pinion Shaft Conversion Kit*
Exempt from emissions tampering regulations under CARB EO# D-355-19

± ⚠ WARNING: Cancer and Reproductive Harm – www.P65Warnings.ca.gov



### PINION SHAFT CONVERSION KIT

| Fitment | Part # |
|---|---|
| 1990–up big twins | **33-4148** |

# SUPER STOCK® ALTERNATOR STYLE CRANKCASES

## FITMENT

- 1984–'99 big twins under 4" bore

CARB compliant
EO #D-355-8

## FEATURES AND BENEFITS

- Relocated cam chest oil pick-up increases gear case scavenging and virtually eliminates oil carry-over at sustained high speeds
- Machined to accept the stock oil filter assembly used on 1992–'99 big twins
- A ported breather passageway and a machined breather window allows the air/oil mist to flow from the flywheel cavity to the cam chest of the engine with the least possible restriction
- Crankcase venting can be achieved via two crankcase breathers, the cylinder heads, or both. We recommend using both crankcase breathers in engines larger than 95"
- Clearanced for strokes as long as 5"
- Compatible with stock 1984-'99 flywheel assemblies, primary covers and gearcovers, making them perfect for stock replacement or high performance applications
- Machined for installation of a crank position sensor. This allows the cases to be used in stock EFI applications and also allows easy installation of S&S IST® Ignition and VFI Fuel Injection. A plug kit is included for applications that do not use a crank position sensor
- Exempt from emissions tampering regulations under CARB EO# D-355-8 when used with stock bore cylinders for 3½" Bore (stock)

## OPTIONS

- Available for stock, 3⅝", and 3 13/16" bore applications with deck heights as much as 3/16" taller than 3½" stock

## KIT CONTENTS

- Crankcase assembly
- All required hardware, fittings, and bearings

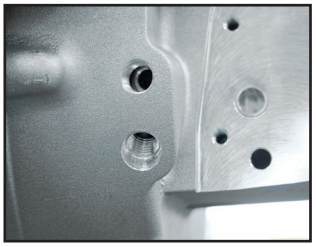

*Two crankcase breather holes allows increased flexibility.*

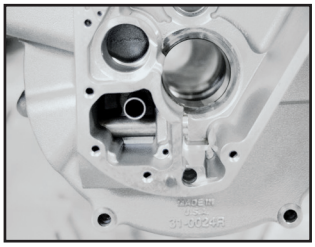

*Relocated oil scavenge pick-up reduces oil carry-over by increasing oil scavenge efficiency.*

***NOTE:*** All S&S crankcases manufactured after June 1, 2008 do not have case interlock groove and ring and do not use case alignment studs. Case mating surface is flat, and cases are aligned with alignment dowels.

→ REPLACEMENT PARTS: SEE PAGE 72

### SUPER STOCK® ALTERNATOR CRANKCASES FOR 1984–'99 BIG TWIN±

| Crankcase Style | Finish | 3½" Bore (Stock) | 3⅝" Bore | Notes |
|---|---|---|---|---|
| 1992–'99 | Natural | **31-0005***** *24469-83C, 24469-83A* | **31-0077** USA[1] | 1, 3, 4 |
| | Wrinkle Black | **31-0055***** *24571-93, 24569-95* | **31-0078** USA[1] | |
| 1984 –'91 | Natural | **31-0000***** *24469-83C, 24469-83A* | **31-0001** | 2, 3, 4 |
| | Wrinkle Black | **31-0052***** *24473-85C* | **31-0053**** | |
| Special Order** | | **31-0002*** | **31-0002** | |

*1. 1992-'99 style oil pump. 2. 1984-'91 style oil pump. 3. Machined for 1984-'99 alloy primary.*
*4. Machined for stock or S&S EFI crank position sensor. Stock diameter only.*
**Special Order: Download the Special Order Form at www.sscycle.com/soforms*
**DISCLAIMER: NOT LEGAL FOR SALE OR USE IN CALIFORNIA ON ANY POLLUTION CONTROLLED MOTOR VEHICLE. NOT LEGAL FOR SALE OR USE NATIONWIDE ON ANY FEDERAL POLLUTION CONTROLLED MOTOR VEHICLE UNDER THE CLEAN AIR ACT
***Exempt from emissions tampering regulations under CARB EO# D-355-8 when used with stock bore cylinders
± ⚠ WARNING: Cancer and Reproductive Harm – www.P65Warnings.ca.gov








# SPECIAL APPLICATION CRANKCASES

## FITMENT

- 1984–'99 big twins—4" bore and over
- S&S 4", 4⅛" bore V-Series engines

## FEATURES AND BENEFITS

- Cam chest is moved outward .250" to allow crankcases to handle large cylinder bore sizes
- Relocated cam chest oil pick-up increases gear case scavenging and virtually eliminates oil carry-over at sustained high rpm
- Machined to accept the stock oil filter assembly used on 1992–'99 big twins
- A ported breather passageway and a machined breather window allows the air/oil mist to flow from the flywheel cavity to the cam chest of the engine with the least possible restriction
- Crankcase venting can be achieved via two crankcase breathers, the cylinder heads, or both! We recommend using both crankcase breathers in engines larger than 95"
- Clearanced for strokes as long as 5"
- Machined for installation of a crank position sensor. This allows the cases to be used in EFI applications and also allows easy installation of S&S IST® Ignition and VFI Fuel Injection. A plug kit is included for applications that do not use a crank position sensor

## KIT CONTENTS

- Crankcase assembly
- All required hardware, fittings, and bearings

***NOTE:*** **All S&S crankcases manufactured after June 1, 2008 do not have case interlock groove and ring and do not use case alignment studs. Case mating surface is flat, and cases are aligned with alignment dowels.**

→ **REPLACEMENT PARTS: SEE PAGE 74**

### SPECIAL APPLICATION ALTERNATOR CRANKCASES FOR 1984–'99 BIG TWIN±

| Crankcase Style | Bore | Deck Height | Natural | Wrinkle Black | Polished |
|---|---|---|---|---|---|
| 1984–'99* | 4" | 5.875" | **31-0047** USA2 | **31-0051** USA2 | – |
| 1984–'99* | 4⅛" | 6.000" | **31-0033** USA3 | **31-0037** USA3 | **31-0039** USA3 |
| Special Order | Specify | Specify | **31-0015**** | **31-0015**** | **31-0015**** |

**1992-'99 style oil pump, machined for 1984-'99 alloy primary, machined for stock or S&S EFI crank position sensor. Stock diameter only.*

***Special Order: Download the Special Order Form at sscycle.com/soforms*

± WARNING: Cancer and Reproductive Harm – www.P65Warnings.ca.gov

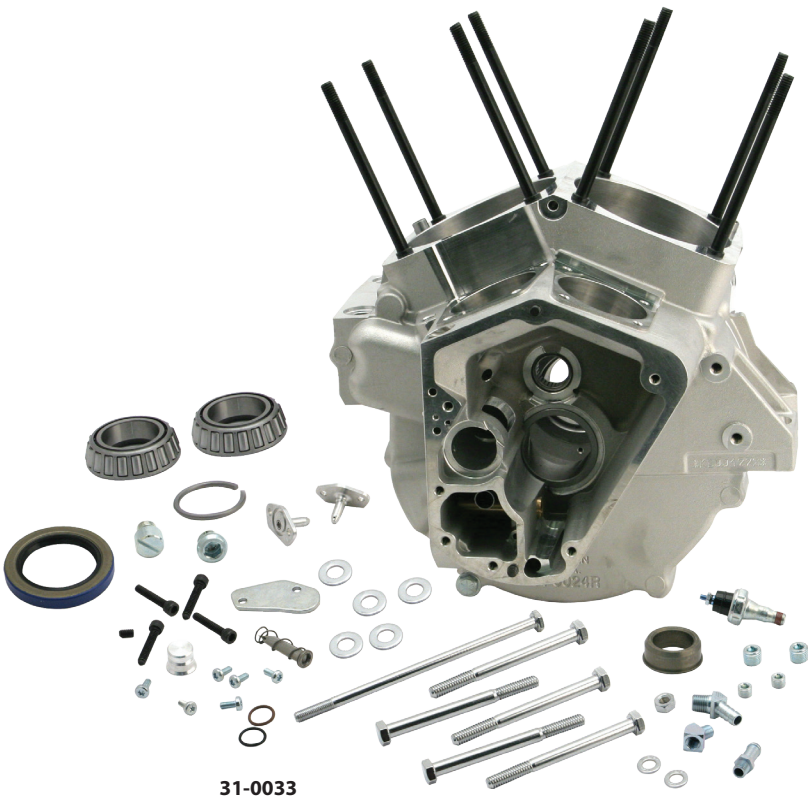

**31-0033**

# REPLACEMENT FLYWHEEL ASSEMBLIES

## FITMENT
- 1984–'99 big twins

## FEATURES AND BENEFITS
- Drive side flywheels have special keyed 6° large diameter taper that provides more contact area, increasing strength
- Standard S&S tapered crankpin and pinion shaft are used for ease of service
- Flywheels for EFI applications are machined with timing notches compatible with factory crank position sensors

## KIT CONTENTS
- Assembled:
  - Flywheels
  - Crankpin
  - Connecting rods



→ TRYING TO IDENTIFY AN S&S® FLYWHEEL? SEE FLYWHEEL I.D. CHART PAGE 226

### FLYWHEELS FOR 1984–'99 CARBURETED BIG TWINS

| Stroke | 8½" Diameter (stock) | 8¼" Diameter |
|---|---|---|
| 4¼" | **32-2239** *23906-90, 23906-93B, 23906-90A* | – |
| Special Order** | **32-2015**** | **32-2015**** |

***Use this special order Part # to order flywheels assembled or unassembled,or balanced or unbalanced. Download the Special Order Form at sscycle.com/soforms*

### FLYWHEELS FOR 1995–'98 EFI BIG TWINS

| Stroke | Part # |
|---|---|
| 4¼" | **32-2145** *23941-95* |

***NOTES:***

***IMPORTANT:*** 1977–'89 style pinion gears, spacers, and nuts are required when installing S&S flywheel assemblies. For installation in 1990–'99 or scratch built engines, order S&S Pinion Shaft Conversion Kit 33-4148.

S&S flywheels are no longer available machined for stock Harley-Davidson® main shafts.

4¼" stroke assembly is balanced for stock HD® 80" pistons.

4⅝" stroke assembly is balanced for S&S stock bore and 3⅝" bore stroker pistons.

Use special order Part # for flywheels balanced to other pistons or rods.

All S&S crankcases for 1984–'99 big twin engines are machined to accept a crank position sensor and can be used with these flywheels.

# REPLACEMENT FLYWHEELS FOR V-SERIES ENGINES

### REPLACEMENT FLYWHEEL ASSEMBLIES FOR S&S V-SERIES ENGINES

| Engine | Stroke | Diameter | Part # |
|---|---|---|---|
| V124*(3-piece) | 4⅝" | 8¼" | **320-0477**± |
| V117*(3-piece) | 4⅜" | 8¼" | **320-0363**± |
| V111*(3-piece) | 4⅛" | 8¼" | **320-0420**± |
| V96 | 4⅝" | 8½" | **32-2230** |
| V96 (IST)* | 4⅝" | 8½" | **32-2146** |
| V80 | 4¼" | 8½" | **32-2239** |
| 1984–1999 Carbureted (non 4⅛" Bore) | Specify | Specify | **32-2015**** |

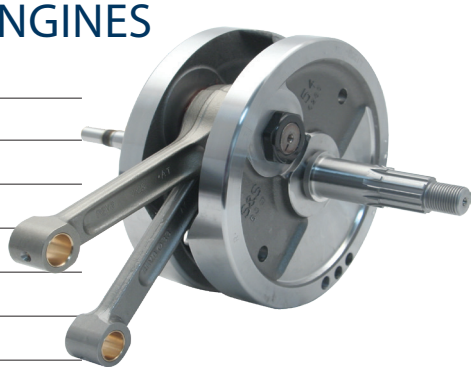

**Left side flywheel is notched for crank position sensor.*

***Use this special order Part # to order flywheels assembled or unassembled, balanced or unbalanced. Download the Special Order Form at sscycle.com/soforms*

± ⚠ WARNING: Cancer and Reproductive Harm – www.P65Warnings.ca.gov

***NOTE:***

***IMPORTANT:*** 1977–'89 style pinion gears, spacers, and nuts are required when installing S&S flywheel assemblies. For installation in 1990–'99 or scratch built engines, order S&S Pinion Shaft Conversion Kit 33-4148.

# HIGH VOLUME HIGH PRESSURE (HVHP) BILLET OIL PUMPS

## FITMENT
- 1984–'99 big twins
- S&S V-Series engines

## FEATURES AND BENEFITS
- No thicker than a stock pump
- Gears with fewer, but larger teeth provide increased oil volume for both supply and return sides of the pump
- Supply gears are 9% wider than stock and standard S&S oil pumps
- 28% wider than stock return gears ensure proper crankcase scavenging, reduce drag on the flywheels, and eliminate oil carryover
- Increased scavenging capacity results in:
- Less oil in the crankcase
- Less oil carryover
- Equipped with a stock length oil pump drive shaft

## OPTIONS
**Pump Only Kits:**
- Complete oil pump assembly
- Oil pump driveshaft
- Miscellaneous hose fittings and plugs
- Paper gaskets
- Mounting hardware

**Pump And Gear Kits:**
- For stock 1984–'89 engines or engines with S&S flywheel assemblies
- Everything in the "pump only" kits
- Oil pump drive shaft gear
- Oil pump pinion shaft gear
- Steel breather gear and shim kit



31-6208

### HIGH VOLUME HIGH PRESSURE OIL PUMP KITS FOR 1984–'99 BIG TWINS

| Year Group | Cover Type | Pump Only Kit | Pump w/Gear Kit* |
|---|---|---|---|
| 1984–'91 | Universal | **31-6214** | **31-6307** |
| 1992–'99 | Universal | **31-6208** USA 2,3 | **31-6302** |
| | Standard | **31-6209** | **31-6298** |

**Pinion shaft gears included in these kits fit stock 1984-'89 pinion shafts and S&S pinion shafts for 1984-'99. Will not fit stock 1990-'99 straight pinion shafts. Standard style covers have feed and return holes in the stock locations. The universal cover has a number of oil feed and return options, allowing maximum flexibility for customized applications.*



*The gear tooth profile and the extra gear width of the HVHP oil pump work together to maintain higher oil pressure and to scavenge additional oil from the crankcase.*

→ REPLACEMENT PARTS: SEE PAGE 81

# STANDARD BILLET OIL PUMPS **GLOSS BLACK NOW AVAILABLE!**

## FITMENT
- 1984–'99 big twins

## FEATURES AND BENEFITS
- Machined with an oil pressure relief bleed off valve to maintain consistent oil pressure from the time the engine is started to the time it's shut off
- Oil pressure regulation bypass route allows excess oil not used by the engine to return directly to the supply side of the pump, reducing foaming and cavitation
- No thicker than a stock pump
- Increased scavenging capacity results in:
  - Less oil in the crankcase
  - Less oil carryover
- Equipped with a stock length oil pump drive shaft

## OPTIONS
**Pump Only Kits**
- Complete oil pump assembly
- Oil pump driveshaft
- Miscellaneous hose fittings and plugs
- Paper gaskets
- Mounting hardware

**Pump And Gear Kits**
- For stock 1984–'89 engines or engines with S&S flywheel assemblies.
- Everything in the "pump only" kits
- Oil pump drive shaft gear
- Oil pump pinion shaft gear
- Steel breather gear and shim kit


31-6203

### OIL PUMP KITS FOR 1984–'99 BIG TWINS

| Year | Cover Type | Pump Only Kit | Pump & Gear Kits |
|---|---|---|---|
| 1984–'91 | Universal | **31-6203** USA | ***31-6295** USA |
| 1992–'99 | NEW FOR 2020 Gloss Black Universal | **310-0899** | – |
| | Standard | **31-6206** USA | ***31-6296** USA |
| | Universal | **31-6205** USA 1 | – |

**Pinion shaft gears included in these kits fit stock 1984–'89 pinion shafts and S&S pinion shafts for 1984-'99. Will not fit stock 1990–'99 straight pinion shafts. Standard style covers have feed and return holes in the stock locations. The universal cover has a number of oil feed and return options, allowing maximum flexibility for customized applications.*

→ REPLACEMENT PARTS: SEE PAGE 80

***NOTE:*** Chrome Plating the Pump — It is extremely difficult to chrome plate an oil pump without getting chrome in the passageways, cavities or on the machined surfaces where the gears, check ball, and pressure valve operates. Chrome in these areas as well as on the gasket surfaces impairs the pumps performance by altering the operating tolerances machined into the parts. In addition, abrasive particles of chrome may break loose causing damage to the pump and the engine. Because of this, S&S does not recommend chrome plating the pump body or cover. S&S voids its warranty if these parts are chrome plated.

# BILLET FILTER BRACKET

## FITMENT

- 1993–'99 big twins w/stock crankcases
- S&S crankcases for 1984–'99 big twins

## FEATURES AND BENEFITS

- Includes oil line fittings and has provisions to plumb an oil cooler



| Description | Part # |
|---|---|
| S&S Billet Filter Bracket | 31-4105 |

# STEEL ROTARY BREATHER GEARS

## FITMENT

- 1984–'99 big twins

## FEATURES AND BENEFITS

- Abrasive particles are less likely to get imbedded in a steel gear body than a plastic one
- A welded-in screen prevents particles from entering the gear cavity and damaging either the gears or oil pump
- Larger diameter holes means improved air flow and oil scavenging from the flywheel cavity
- Improved breather window timing increases flywheel cavity vacuum and crankcase oil scavenging
- Slotted scavenge hole increases breather pocket oil scavenging for less carryover

## OPTIONS

- Available in standard and +0.030" for use in engines with damaged breather bores




*Breather gear kits include breather gear & steel end play shim kit*

### BREATHER GEAR KITS FOR 1984–'99 BIG TWINS

| Year | Standard Size | +.030" |
|---|---|---|
| 1984–'99 | **33-4250** | **33-4260** |

### BREATHER GEARS ONLY FOR 1984–'99 BIG TWINS

| Year | Standard Size | +.030" |
|---|---|---|
| 1984–'99 | **33-4241** *25310-82A, 25313-77B, 25311-90* | **33-4242** |

### BREATHER GEAR SPACING SHIM KIT

| Description | Part # |
|---|---|
| Fits stock 1979–'82 and all S&S steel breather gears *Includes one of each: .100", .110", .120", .130", .140", .150", .160", .170"* | **33-4249** |

### BREATHER GEAR SPACING SHIMS*

| Thickness | Part # |
|---|---|
| +.100" | **33-4200** |
| +.110" | **33-4201** *25320-79* |
| +.120" | **33-4202** *25322-79* |
| +.130" | **33-4203** *25325-79, 25320-82* |
| +.140" | **33-4204** *25322-82, 25327-79* |
| +.150" | **33-4205** *25325-82* |
| +.160" | **33-4206** *25327-82* |
| +.170" | **33-4207** |

**These shims must be used with steel breather gears only.*

# CRANKCASE BREATHER REED VALVES
## FOR LARGE DISPLACEMENT ENGINES

## OPTIONS

- Available in standard size or +.030" for use in engines with damaged breather bores

### CRANKCASE BREATHER REED VALVES FOR 1993–'99 BIG TWINS

| Application | Standard Size | +.030" |
|---|---|---|
| 1993–'99 | **31-2096** | **31-2100** |

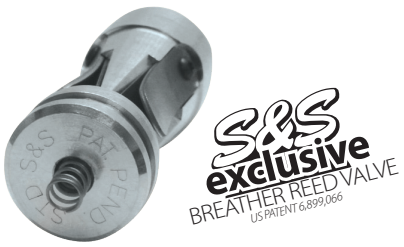


***NOTE:*** The crankcase reed valve should not be used in 1984–1992 crankcase breathing engines. It is only intended for head breathing applications.

# BILLET GEARCOVERS

**GLOSS BLACK NOW AVAILABLE!**

## FITMENT

- 1984–'92 big twins with standard ignition

## KIT CONTENTS

- Billet gearcover
- Gaskets
- Mounting hardware
- Instructions



REPLACEMENT PARTS: SEE PAGE 68

**BILLET GEARCOVERS**

| Application | Finish | Part # |
|---|---|---|
| 1984–'92 | NEW FOR 2020 Gloss Black | **310-0898** |
| 1984–'92 | Polished USA 1,2,3 | **31-0335** |
| 1984–'92* | Chrome Plated | **106-4211**± |

**Gearcover has internal breather passage that is used to vent crankcase.*

± WARNING: Cancer and Reproductive Harm – www.P65Warnings.ca.gov

# CAST GEARCOVERS

## FITMENT

- 1984–'92 big twins

## FEATURES

- Machined from tough 356-T6 aluminum castings—*the same material used to make S&S crankcases*
- Inner cast aluminum cover and a decorative bolt-on outer cover
- Will accept either points or electronic ignition systems

## KIT CONTENTS

- Cast gearcover and gaskets
- Mounting hardware



REPLACEMENT PARTS: SEE PAGE 68

**CAST GEARCOVERS AND IGNITION COVERS**

| Application | Finish | Flangeless Tall |
|---|---|---|
| 1984–'92 big twins* | Natural | **31-0203** |
| 1984–'92 big twins | Wrinkle Black | **31-0299** |

**Gearcover has internal breather passage that is used to vent crankcase.*

# IGNITION COVERS

**GLOSS BLACK NOW AVAILABLE!**

## FITMENT

- S&S engines with "cone" style gearcovers

**IGNITION COVER**

| Description | Part # |
|---|---|
| NEW FOR 2020 Gloss Black | **310-0897** |
| Chrome | **31-0332** |

± WARNING: Cancer and Reproductive Harm – www.P65Warnings.ca.gov

# CYLINDERS WITH PISTONS KIT

- Cylinders with piston kits include fitted pistons and cylinders, head gaskets, base gaskets, and exhaust gaskets
- Cylinder kits with pistons are honed to fit the pistons included



910-0224

| S&S® 4⅛" BORE CYLINDERS WITH PISTONS KIT SPECIFICATION CHART | | | | |
|---|---|---|---|---|
| Displacement | Stroke | Cylinder Length | Piston Type | Compression Ratio |
| 111" | 4⅛" | 4.764" | Forged | 9.7:1 |
| 117" | 4⅜" | 4.889" | | 10.2:1 |
| 124" | 4⅝" | 5.014" | | 10.8:1 |

**4⅛" BORE CYLINDERS WITH PISTONS FOR 124",117", & 111" KIT**

| Displacement | Cylinders w/Pistons (Set) | | |
|---|---|---|---|
| | Natural | Wrinkle Black | Polished |
| 111" | **910-0219** | **910-0359** | **910-0424** |
| 117" | **910-0290** | **910-0225** | **910-0228** |
| 124" | **910-0229** | **910-0224** | **910-0230** |



| S&S® 3⅝" BORE CYLINDERS WITH PISTONS KIT SPECIFICATION CHART | | | | | | |
|---|---|---|---|---|---|---|
| | | | Stock Heads *(Flat Topped Pistons)* | S&S Super Stock® Heads *(Domed Pistons)* | | |
| | | | | Compression Ratio | | |
| Displacement | Stroke | Cylinder Length | Compression Ratio | Standard | Intermediate | High |
| 88" | 4¼" | 5.375" | 9:1 | 9.4:1 | 10.1:1 | 12.3:1 |
| 96" | 4⅝" | 5.565" | 9.75:1 | 10.1:1 | 10.9:1 | 13.2:1 |
| 103" | 5"* | 5.750" | 10.5:1 | 10.9:1 | 11.8:1 | 14.2:1 |

**Small Diameter Flywheels*

**3⅝" BORE CYLINDERS WITH PISTONS FOR 96" & 88" KIT**

| Displacement | Stock Heads *(Flat Topped Pistons)* | | S&S Super Stock® Heads *(Domed Pistons)* | | | | |
|---|---|---|---|---|---|---|---|
| | Cylinders w/Pistons | | Cylinders w/Standard Compression Pistons | | | Cylinders w/Intermediate Compression Pistons | |
| | Natural | Wrinkle Black | Natural | Wrinkle Black | Polished | Natural | Wrinkle Black |
| 88" | **91-7002** | **91-7502** | **91-7009** | – | – | **91-7052** | **91-7552** |
| 96" | **91-7202** | **91-7702** | **91-7207** | **91-7707** | **91-7152** | **91-7054** | – |

## CONTINUED
## CYLINDER & PISTON KITS

| S&S® 3½" BORE CYLINDERS WITH PISTONS KIT SPECIFICATION CHART | | | | | | |
|---|---|---|---|---|---|---|
| Displacement | Piston Type | Stroke | Cylinder Length | COMPRESSION RATIO | | |
| | | | | Stock Heads | S&S 76cc Performance Replacement Heads | S&S Super Stock® Heads |
| **FLAT-TOPPED PISTONS FOR STOCK OR S&S PERFORMANCE REPLACEMENT CYLINDER HEADS** | | | | | | |
| 80" | Cast/Flat-topped | 4¼" | 5.550" (Stock) | 8.5:1 | 8.8:1 | – |
| 89" | Forged Flat-topped | 4⅝" | 5.550" (Stock) | 9.25:1 | 9.4:1 | – |
| **SPECIAL DOMED PISTONS FOR S&S SUPER STOCK® CYLINDER HEADS** | | | | | | |
| 80" | Forged/Super Stock® Domed | 4¼" | 5.550" (Stock) | – | – | 10:1 |
| 89" LC | Forged/Super Stock® Domed | 4⅝" | 5.550" (Stock) | – | – | 10:1 |
| 89" HC | Forged/Super Stock® Domed | 4⅝" | 5.550" (Stock) | – | – | 12.5:1 |

### 3½" BORE CYLINDERS WITH PISTONS KIT FOR STOCK HEADS, S&S PERFORMANCE REPLACEMENT HEADS AND S&S SUPER STOCK® HEADS

| Displacement | Cylinders w/Pistons for S&S Super Stock® Heads | | Cylinders w/Pistons for Stock Heads and S&S Performance Replacement Heads | |
|---|---|---|---|---|
| | Natural | Wrinkle Black | Natural | Wrinkle Black |
| 80" | **91-7213** | **91-7713** | **910-0179**<br>*16510-83A* | **910-0182**<br>*16512-86A* |
| 89" | – | – | **91-7211** | **91-7711** |
| 89" LC | – | **91-7715** | – | – |

**ALL OTHER BORES AND FINISHES ARE AVAILABLE THROUGH SPECIAL ORDER** **91-7504***
**Special Order: Download the Special Order Form at sscycle.com/soforms*

***NOTES:*** Stock crankcases must be machined to accommodate the large spigot diameter of 3⅝" bore cylinders.

→ PISTON REPLACEMENT PARTS: SEE PAGE 44



91-7715

*All reference to HD® Part #s is for identification purposes only. We in no way are implying that any of S&S® Cycle's products are original equipment parts or that they are equivalent to the corresponding HD Part # shown.*

# CYLINDERS

- Cylinder sets without pistons are bored slightly under normal size and are not honed
- Include dowel pins

### 4⅛" BORE CYLINDERS

| Displacement | | Natural | Wrinkle Black | Polished |
|---|---|---|---|---|
| 111" | Set | **910-0284** | **910-0358** | **910-0246** |
| 117" | Set | **910-0267** | **910-0261** | **-** |
| 124" | Set | **910-0270** | **910-0258** | **910-0273** |

### 3⅝" BORE CYLINDERS

| Displacement | | Natural | Wrinkle Black |
|---|---|---|---|
| 88" | Set | **91-7000** | **91-7500** |
| 96" | Set | **91-7200** | **91-7700** |

**Small Diameter Flywheels  Recommended Piston Fitment:  Close: .0015"-.0020"  Loose: .0035"-.0045"*

### 3½" BORE CYLINDERS

| Displacement | | Natural | Wrinkle Black |
|---|---|---|---|
| 80"<br>89" | Set | **91-7210** | **91-7710** |



**ALL OTHER BORES AND FINISHES ARE AVAILABLE THROUGH SPECIAL ORDER** **91-7504***
**Special Order: Download the Special Order Form at sscycle.com/soforms*

***NOTES:*** S&S 4⅛" pistons are machined to such close tolerances that it is not necessary to measure the piston. Additionally, the low friction coating on the piston skirt makes taking measurements very difficult. Therefore, hone cylinders to nominal diameter ± 0.0005" for correct clearance.

Stock crankcases must be machined to accommodate the large spigot diameter of 3⅝" bore cylinders.

# PISTON KITS

- Piston kits include set of pistons, rings, wristpins, and clips



## 4⅛" BORE FORGED PISTON KITS FOR HOT SET UP KITS®

| Displacement | Deck Height | Stroke | Standard | +.010" | +.020" | +.030" |
|---|---|---|---|---|---|---|
| 124" & 117" Stock Heads 10cc Dished | 1.050" | Up To 4⅝" | **920-0046** | **920-0047** | **920-0050** | **920-0053** |
| 124", 117" & 111" —Stock or S&S Heads Flat Top | 1.050" | Up To 4⅝" | **106-3491A** | **106-3872A** | **106-3964A** | **920-0094** |

***NOTE:*** S&S 4⅛" pistons are machined to such close tolerances that it is not necessary to measure the piston. Additionally, the low friction coating on the piston skirt makes taking measurements very difficult. Therefore, hone cylinders to nominal diameter ± 0.0005" for correct clearance.

## 4" BORE FORGED PISTON KITS

| Displacement | Deck Height | Stroke | Standard | +.010" | +.020" | +.030" |
|---|---|---|---|---|---|---|
| Retro 100" | 1.200" | 4" | **92-1420** | **92-1421** | **92-1422** | – |
| 100" | | 4" | **92-1400** | **92-1401** | **92-1402** | **92-1403** |
| 107" | | 4¼" | **92-1400** | **92-1401** | **92-1402** | **92-1403** |
| 113" | | 4½" | **92-1410** | **92-1411** | **92-1412** | **92-1413** |
| 116" | | 4⅝" | **92-1420** | **92-1421** | **92-1422** | – |

*Recommended Piston Fitment: Close: 0.0020"-0.0025" Loose: 0.0037"-0.0045"*

## FORGED 3⅝" BORE FLAT TOPPED PISTON KITS FOR STOCK STYLE HEADS

| Displacement | Deck Height | Stroke | Standard | +.010" | +.020" | +.030" | +.040" |
|---|---|---|---|---|---|---|---|
| 88" | 1.200" | 4¼" | **92-1900** | **92-1901** | **92-1902** | – | **92-1904** |
| 93" | | 4½" | | | | | |
| 98"* | | 4¾"* | | | | | |
| 96" | | 4⅝" | **92-1930** | **92-1931** | **92-1932** | **92-1933** | – |
| 103"* | | 5"* | **92-1940** | **92-1941** | – | **92-1943** | – |

**Small Diameter Flywheels Recommended Piston Fitment: Close: 0.0015"-0.0020" Loose: 0.0035"-0.0040"*

## 3⅝" BORE STANDARD COMPRESSION PISTON KITS FOR S&S SUPER STOCK® HEADS

| Displacement | Deck Height | Stroke | Standard | +.010" | +.020" | +.030" | +.040" |
|---|---|---|---|---|---|---|---|
| 88" | 1.200" | 4¼" | **92-1060** USA | **92-1061** | **92-1062** | **92-1063** | **92-1064** |
| 93" | | 4½" | | | | | |
| 96" | | 4⅝" | | | | | |
| 103"* | | 5"* | – | **92-1081** | – | | |

## 3⅝" BORE INTERMEDIATE COMPRESSION PISTON KITS FOR S&S SUPER STOCK® HEADS

| | | | | | | | |
|---|---|---|---|---|---|---|---|
| 88" | 1.200" | 4¼" | **92-1110** | **92-1111** | **92-1112** | – | – |
| 93" | | 4½" | | | | | |
| 96" | | 4⅝" | | | | | |

**Small Diameter Flywheels Recommended Piston Fitment: Close: 0.0023"-0.0025" Loose: 0.0035"-0.0045"*

### 3½" BORE CAST FLAT-TOPPED REPLACEMENT PISTON KITS FOR STOCK HEADS OR S&S PERFORMANCE REPLACEMENT HEADS

| Displacement | Deck Height | Stroke | Standard | +.010" | +.020" |
|---|---|---|---|---|---|
| 80" | 1.3750" | 4¼" | **920-0015** *21940-83* | **920-0026** *21942-83* | **920-0027** *21943-83* |

*No replacement wristpins are available. Recommended Cast Piston Fitment: Close 0.0010"-0.0015" Loose 0.0020"-0.0025"*

### 3½" BORE FORGED FLAT TOPPED STROKER PISTON KITS FOR STOCK OR S&S PERFORMANCE REPLACEMENT HEADS

| Displacement | Deck Height | Stroke | Standard | +0.010" | +0.020" | +0.030" |
|---|---|---|---|---|---|---|
| 89" | 1.1875" | 4⅝" | **106-5554** | **106-5555** | **106-5556** | **106-5793** |

*Recommended Piston Fitment: Close .0020"-.0025" Loose .0030"-.0035" May require rebalancing if replacing old 92-2040 series pistons.*

### 3½" BORE FORGED DOMED PISTON KITS FOR S&S® SUPER STOCK® HEADS

| Displacement | Deck Height | Stroke | Standard | +0.005" | +0.010" | +0.020" | +0.030" |
|---|---|---|---|---|---|---|---|
| 80" | 1.3750" | 4¼" | **92-2026** | **92-20265** | **92-2027** | **92-2028** | **92-2029** |
| 89" LC | 1.1875" | 4⅝" | **92-2046** | - | **92-2047** | **92-2048** | – |
| 89" HC | | | **92-2016** | - | **92-2017** | **92-2018** | – |

*Recommended Piston Fitment: Close .0020"-.0025" Loose .0030"-.0035"*

# REPLACEMENT PARTS FOR PISTONS

### PISTON RINGS, MOLY FACED

| Bore | 4⅛" | 4" | 3⅝" | 3½" Cast Flat-Topped* | 3½" Forged Flat-Topped | 3½" Forged Domed |
|---|---|---|---|---|---|---|
| Deck Height | 1.050" | 1.200" | 1.200" | 1.3750" | 1.1875" | 1.3750" / 1.1875" |
| Standard | **940-0014** | **94-1300X** | **94-1210X** | **94-2216X** | **94-2206X** | **94-2216X** |
| +.005" | – | – | – | – | – | **94-22165X** |
| +.010 | **940-0012** | **94-1301X** | **94-1211X** | **94-2217X** | **94-2207X** | **94-2217X** |
| +.020" | **940-0013** | **94-1302X** | **94-1212X** | **94-2218X** | – | – |
| +.030" | **940-0017** | **94-1303X** | **94-1213X** | **94-2209X** | **94-2219X** | – |
| +.040" | – | – | **94-1214X** | – | – | – |
| +.060" | – | – | **94-1216X** | – | – | – |

**No replacement wristpins are available*





### WRISTPINS

| Bore | Description | Part # |
|---|---|---|
| 4⅛" | .927" x 2.825" long USA 3 | **94-9277** |
| 4" | .792" x 2.825" long USA 1,2 | **94-9256** |
| 3⅝" | | |
| 3½" | | |

### KEEPERS

| Bore | Description | | Part # |
|---|---|---|---|
| 4⅛" | Keeper *22097-99* | *each* | **94-9278-S** |
| | | *2 pack* | **94-9278-2** |
| | | *4 pack* | **106-2304** |
| 4" | Keeper *22589-83A* | *each* | **94-9254-S** |
| 3⅝" | | *2 pack* | **94-9254-2** |
| 3½" | | *4 pack* | **94-9254** |

*All reference to HD® Part #s is for identification purposes only. We in no way are implying that any of S&S® Cycle's products are original equipment parts or that they are equivalent to the corresponding HD Part # shown.*

# CAMSHAFTS

## RECOMMENDED APPLICATIONS FOR S&S CAMS

**OES:** Original Equipment Specification (OES) A bolt-in replacement cam with stock cam timing is designed for riders with stock engines. Does not require tuning. Bolt-in stock. Equivalent to HD® L-Grind

**490LR:** Hydraulic Bolt-In. Designed for broad power range improvement. Good choice for heavy bikes and trailer towing. Increases low and mid range performance. Works well with stock compression ratio and stock exhaust. No valve spring change required. Basic rpm Idle–5000.

**508:** Bolt-in cam intended for stock engines with less than 10:1 compression ratio. Quiet valvetrain with excellent low/mid range torque for touring and 2 up riding.

**510V:** Bolt-in cam that works well with stock or ported heads. Improved ramp design results in low valve train noise. Meant for engines up to 96" and 10:1 compression ratio. 3000–5000 rpm.

**520:** A replacement part for S&S emissions certified engines, this is a short duration emissions cam with very little overlap to reduce emissions of unburned hydrocarbons. Requires high lift springs and normal clearance checks. 1000–4500 rpm (80"–96").

**543:** A replacement cam for newer S&S 4⅛" bore V-series emissions certified engines for OE and custom applications. High lift, short duration and no overlap. Requires high lift springs and normal clearance checks. 1000–4000 rpm (111"–124").

**561:** For 80"–96" engines at 9.5:1–10.5:1 compression ratio. Provides strong midrange power. 3000–5500 rpm.

**585V:** A versatile cam for 80" to 96" engines with 10:1–10.5:1 compression, and larger engines with 9.5:1–10:1 compression ratios. 3500–6000 rpm.

**600:** An exceptional cam in any large displacement engine with 9.5:1 to 10.5:1 compression. 3500–6000 rpm.

**631:** For high rpm applications, an excellent choice for all street and racing engines with 11:1 and higher compression ratios. Great performance cam, but expect more "wear and tear" on valve train components. Valve spring spacing and other normal clearancing checks required. 4500–6500 rpm.

**640:** For large displacement motors with compression ratios of 10.5–11.5:1, or smaller motors with 11:1–12:1 compression ratio. Does not require as much compression as the 631 and provides a more linear power delivery. 3000–6000 rpm.

**675:** Designed for use with S&S special application cylinder heads, but can be used with other cylinder heads with appropriate valve springs. Intended for large displacement competition engines of 120 cubic inches or more, and 11:1 or greater compression. 4500–6500 rpm.

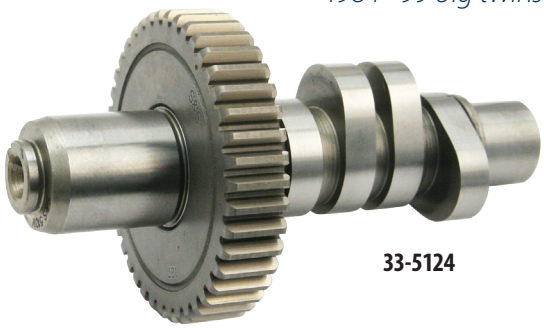

33-5124

## CAMS FOR 1984–'99 BIG TWIN ENGINES

| Cam Name | Part # |
|---|---|
| OES | **330-0290** |
| 490LR | **330-0371** |
| 508 | **330-0093** |
| 510V | **33-5124** |
| 520 | **33-5073** USA 1,2 |
| 543 | **330-0181** |
| 561 | **33-5076** |
| 585V | **33-5109** |
| 600 | **33-5058** |
| 631 | **33-5080** |
| 640 | **33-5108** |
| 675 | **33-5133** |

DISCLAIMER: NOT LEGAL FOR SALE OR USE IN CALIFORNIA ON ANY POLLUTION CONTROLLED MOTOR VEHICLE. NOT LEGAL FOR SALE OR USE NATIONWIDE ON ANY FEDERAL POLLUTION CONTROLLED MOTOR VEHICLE UNDER THE CLEAN AIR ACT

***NOTE:*** S&S can do a special order cam. Contact your S&S Customer Service Representative for more information.

## S&S CAM SPECIFICATIONS FOR 1984–'99 BIG TWIN ENGINES

| Cam Name | | Valve Timing Open/Close | | Valve Duration | | Valve Lift | Lift @ TDC | | Spring Spacing Required | Tappet Type Required |
|---|---|---|---|---|---|---|---|---|---|---|
| | | Intake | Exhaust | | | | | | | |
| | | Open BTDC/Close ABDC | Open BBDC/Close ATDC | Intake | Exhaust | | Intake | Exhaust | | |
| OES | | 2.0°/34.0° | 36.0°/4.0° | 216.0° | 220.0° | .475" | 0.060" | 0.060" | No | Hydraulic |
| 490LR | | 12°/34° | 41°/15° | 226° | 236° | 490" | .146" | .157" | No | Hydraulic |
| 508 | | 11°/25° | 50°/5° | 217° | 235° | .508" | .141" | .110" | No | Hydraulic |
| 510V | | 20°/38° | 52°/20° | 238° | 252° | .510" | .187" | .178" | No | Hydraulic |
| 520 | | 0°/40° | 50°/2° | 220° | 232° | .520" | .086" | .094" | Yes | Hydraulic |
| 543* | Front | -26°/52° | 49°/-1° | 206° | 228° | .543" | .017" | .083" | Yes | Hydraulic |
| | Rear | -25°/44° | 33°/-10° | 199° | 203° | .543" | .018" | .053" | Yes | Hydraulic |
| 546 | | 5°/55° | 52°/5° | 240° | 237° | .546" | .126" | .106" | Yes | Hydraulic |
| 561 | | 32°/40° | 50°/26° | 252° | 256° | .560" | .252" | .210" | Yes | Hydraulic |
| 585V | | 20°/45° | 60°/20° | 245° | 260° | .585" | .186" | .180" | Yes | Hydraulic |
| 600 | | 20°/55° | 60°/20° | 255° | 260° | .600" | .192" | .184" | Yes | Hydraulic |
| 631 | | 34°/61° | 66°/29° | 275° | 275° | .630" | .281" | .221" | Yes | Solid or Hydraulic |
| 640 | | 25°/60° | 65°/20° | 265° | 265° | .640" | .222" | .192" | Yes | Hydraulic |
| 675 | | 25°/64° | 70°/25° | 269° | 275° | .675" | .235" | .209" | Yes | Hydraulic |

**Emissions cams front and rear do not have identical timing. Negative values are due to special timing for reduced emissions.*

# REPLACEMENT PINION GEARS

## FITMENT

- 1984–'89 big twins
- 1990–'99 engines with S&S flywheel assembly



### 1984–'89 BIG TWIN STYLE PINION GEAR SELECTION CHART

| Color Code | Size | HD® Part # | S&S Part # |
|---|---|---|---|
| Orange | Biggest | *24040-78* | **33-4141** |
| White | | *24041-78* | **33-4142** |
| Yellow | | *24042-78* | **33-4143** |
| Red | Average | *24043-78* | **33-4144** |
| Blue | | *24044-78* | **33-4145** |
| Green | | *24045-78* | **33-4146** |
| Black | Smallest | *24046-78* | **33-4147** |

***NOTES:*** If the stock gear is unmarked and the size is unknown or you are scratch building an engine and have no gear, we recommend that you order a gear in the middle of the size range. These sizes were used more often and should provide adequate gear clearance under most circumstances. When in doubt, use a gear from the middle to the small side of the range, because a combination of looser fitting smaller gears is less likely to cause binding and premature wear. Consult the chart for the size and appropriate Part # required. If you wish to achieve optimum cam gear to pinion gear fit, consult your factory service manual for instructions on fitting these gears before making a selection. Some sizes, particularly those on and near the ends of each range, are available on a limited basis because they are the extremes.

S&S® does not offer a replacement pinion shaft for 1990–'99 big twin engines that accepts a stock pinion gear, oil pump drive gear, gear spacer and pinion gear nut, because experience has shown that the design is not strong enough for performance applications. For this reason, we recommend and sell only the pre–1990 style pinion shaft for big twins. To make the change easier, S&S offers a conversion package consisting of a pinion gear, spacer, nut and oil pump drive gear for big twin engines.

# PINION SHAFT GEAR KITS

### PINION SHAFT GEAR KITS FOR 1984–'89 BIG TWINS

| Color Code | Size | S&S Part # |
|---|---|---|
| Yellow | Biggest | **33-4185** |
| Red | Average | **33-4148** |
| Blue | | **33-4181** |
| Black | Smallest | **33-4180** |

*Note: All S&S Pinion Shaft Gear Kits must be used with 1973-'99 style 24 tooth oil pump drive shaft gear such as S&S part # 33-4230. Use these kits when installing an S&S flywheel assembly in a 1990-'99 engine.*



**33-4244** **33-4230** **33-4232** **33-4289**

### INDIVIDUAL COMPONENTS

| Description | S&S Part # |
|---|---|
| Pinion Shaft Gear Spacer | **33-4289** |
| Pinion Shaft Gear Nut *24023-54* | **33-4244** |
| Pinion Shaft Oil Pump Drive Gear* 6 teeth *26349-73, 26349-73A* | **33-4232** |
| Oil Pump Drive Gear** 24 teeth *26345-73* | **33-4230** |

**Requires S&S part #33-4230 or 26345-73 drive shaft drive gear. Fits 1984-'89 stock and 1984-'99 S&S pinion shafts.*

***Requires S&S part #33-4232, part #33-4237 or 26349-73, 26349-73A pinion shaft drive gear.*



*All reference to HD® Part #s is for identification purposes only. We in no way are implying that any of S&S® Cycle's products are original equipment parts or that they are equivalent to the corresponding HD Part # shown.*

# TAPPET GUIDES

**GLOSS BLACK NOW AVAILABLE!**

## FITMENT

- 1984–'99 big twins
- S&S V-Series engines
- S&S Special Application crankcases with .250" offset cam chest

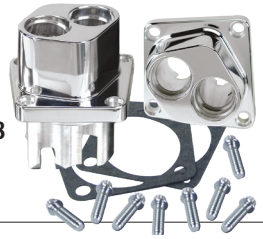

106-5428

### BILLET TAPPET GUIDES FOR S&S V-SERIES ENGINES & S&S SA CRANKCASES

| Tappet Guide | CRANKCASE STYLE | | | |
|---|---|---|---|---|
| | Stock/Super Stock® | | | Special Application |
| | NEW FOR 2020 Gloss Black | Polished | Chrome | Chrome |
| Set | **330-0590** | **106-6459** | **106-5428**± | **106-3005**± |

±⚠WARNING: Cancer and Reproductive Harm – www.P65Warnings.ca.gov

### CAST TAPPET GUIDES FOR S&S V-SERIES ENGINES & S&S SA CRANKCASES

| Tappet Guide | Crankcase Style | | | |
|---|---|---|---|---|
| | Stock/S&S Super Stock® | | Special Application | |
| | Natural | Wrinkle Black | Natural | Wrinkle Black |
| Set | **33-5301** USA USA 1 | **33-5324** | **33-5309** | **33-5325** |

***NOTE:*** S&S® engines for 1984–'99 chassis with larger than 3 13/16" bores are typically built using special crankcases such as S&S Special Application cases which have an offset right side gear cavity for more tappet guide to cylinder clearance. S&S offers special tappet guides machined to compensate for the change in pushrod angle caused by the cam chest offset of these cases.

# HIGH PERFORMANCE HYDRAULIC TAPPETS



33-5352

## FITMENT

- 1984–'99 big twins
- S&S V-Series engines

## FEATURES AND BENEFITS

- .123" larger in diameter than the "raceless" roller axles currently used by some manufacturers
- Improved inner race-roller design allows use of more, and larger bearings to increase load-carrying surface area, further reducing stress and wear in the critical roller area
- Redesigned plunger assembly better withstands forces associated with heavy-duty valve springs and cams typically used in high-performance applications
- Improved metering device precisely controls oil delivery to top end, ensuring rapid lifter pump-up and reducing possibility of oil starvation to bottom end
- Each lifter body and plunger assembly is selective-fit and then leak down tested to ensure correct operation

## OPTIONS

- Tappets are available with the $HL_2T$ Limited Travel Kit for improved cold starts and high rpm valve timing accuracy

## KIT CONTENTS

- Four hydraulic tappets

### HIGH PERFORMANCE HYDRAULIC TAPPETS

| Description | Part # |
|---|---|
| Without $HL_2T$ Kit *18523-86A* | **33-5352** |
| With $HL_2T$ Kit | **33-5353** USA 1,2,3 |

***Extra parts needed:***

S&S tappets with $HL_2T$ Kit require the use of adjustable pushrods.

Because of close tolerances, tappets in set part #33-5353 may require slightly longer bleed down time than conventional tappets. At temperatures of 65°F and above, however, bleed-down should take 20 minutes or less using 20W50 engine oil.

# HYDRAULIC LIFTER LIMITED TRAVEL SPACER ($HL_2T$)

## FITMENT

- 1984–'99 big twins
- All S&S tappets



## FEATURES AND BENEFITS

- Designed to limit the range of travel of the hydraulic tappet plunger—*Easier starting*
- Low noise and positive valve train activation
- More horsepower at higher RPMs

### HYDRAULIC LIFTER LIMITED TRAVEL SPACER ($HL_2T$)

| Description | Part # |
|---|---|
| Set of four spacers *(fits tappets with .612" I.D.)* | **33-5338** *18526-89A* |

***Extra parts needed:*** Adjustable pushrods must be used with $HL_2T$ kit in order to obtain proper plunger position. S&S $HL_2T$ kit will not fit the late stock replacement tappets HD#18523-86B for 1984–'99 big twins. These tappets have a smaller bore size and a larger spring diameter than earlier versions. Part #33-5338 fits tappets with .612" I.D.

# TIME-SAVER ADJUSTABLE PUSHRODS

## FEATURES AND BENEFITS

- Eliminates the need to disassemble the top end and remove the rocker arms to change pushrods or camshafts
- Reduce installation time by 75% — Hence the name *Time-Saver*
- Larger 9mm diameter chrome moly tubing provides superior strength and minimizes pushrod flex
- Single adjuster end provides pushrod lengths from 9.5" to 11.5" for stock height and taller engines
- Kit includes set of four pushrods and installation instructions



**TIME-SAVER ADJUSTABLE PUSHRODS**

| Description | Part # |
|---|---|
| Pushrod Set | **930-0052** |

# QUICKEE ADJUSTABLE PUSHRODS

## FITMENT

- 1984–'99 big twin

## FEATURES AND BENEFITS

- Easy to install — no need to remove rocker covers
- Adjustable to work with all stock and aftermarket cams
- Works with stock pushrod covers

→ REPLACEMENT PARTS: SEE PAGE 49

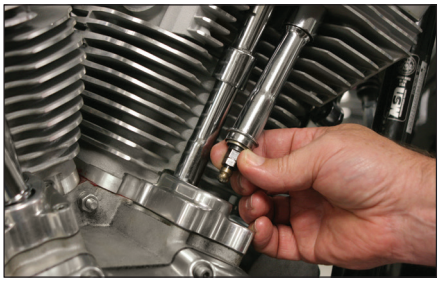

*When a Quickee adjustable pushrod is collapsed, it can easily be installed or removed from an assembled engine.*



**93-5120**

**QUICKEE ADJUSTABLE PUSHRODS**

| Application | Displacement | Part # |
|---|---|---|
| 1984–'99 big twin | 80"–98", 113", 117", 124" | **93-5120**† |
| | 107", 111" & S&S 88" | **93-5123** |

†*Will not fit in an 88" engine which is .175" shorter. The rear intake pushrod is too long.*

# STANDARD ADJUSTABLE PUSHRODS

## FITMENT

- 1984–'99 big twins

## FEATURES AND BENEFITS

- Made out of 7/16" O.D. chromoly steel tubing for strength and durability
- Adjustable to work with all stock or aftermarket cams
- Compatible with solid and hydraulic lifters

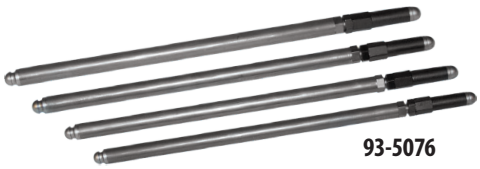

**93-5076**

**PUSHROD SETS FOR 1984–'99 BIG TWINS**

| Displacement | Cylinder Length | Part # |
|---|---|---|
| 100"* | 4.745" | **93-5090** |
| 88", 107"* | 5.375" (-.175")/4.870* | **93-5017** |
| 93", 113"* | 5.500" (-.050")/4.995* | **93-5018** |
| 80", 89", 96" | 5.550" (Stock) | **93-5076** |
| 98" | 5.625" (+.075") | **93-5019** |
| 103" | 5.750" (+.200") | **93-5020** |

**These are S&S 4" bore engines using +.500" deck crankcases. Cylinder lengths are .500" shorter.*

**PUSHROD SETS FOR 1984–'99 4⅛" BORE BIG TWINS**

| Displacement | Cylinder Length | Part # |
|---|---|---|
| 111" | 4.764" | **93-5017** |
| 117" | 4.889" | **93-5018** |
| 124" | 5.014" | **93-5019** |

*NOTE: Crankcases used in S&S 4⅛" bore engines have 6.000" cylinder deck height. The increased deck height effects the cylinder length. Do not use cylinder lengths in this chart to select pushrods for engines built in crankcases with stock, 5.375" deck height.*

→ REPLACEMENT PARTS: SEE PAGE 49

# NON-ADJUSTABLE PUSHRODS

## FITMENT

- 1984–'99 Harley-Davidson® Evolution big twin engines

## FEATURES AND BENEFITS

- Replaces stock pushrods perfectly
- 7/16" high strength chromoly steel tubing for increased strength
- Pushrods are marked with stock color code and valve position for easy installation



### NON-ADJUSTABLE PUSHRODS

| Description | Part # |
|---|---|
| Pushrods Only | **930-0041** |

# PUSHROD COVERS AND RELATED PARTS

### PUSHROD REPLACEMENT PARTS

| Item Description | | Part # |
|---|---|---|
| S&S Pushrod Cover Kit* *(includes Top and bottom covers, Cover cap, Cover spring, & Spring washers)* | Stock Height | **93-4039** |
| | 1" or more taller than stock | **93-4038** |
| Top Cover USA 1,2,3 *17935-66T, 17935-79B* | each | **93-4016** |
| Bottom Cover *17938-83* | each | **93-4015** |
| Cover Cap USA 1,2,3 *17945-36B* | each | **93-4017** |
| Cover Spring USA 1,2,3 *17947-36* | each | **93-4018** |
| Cover Cap Washer *6762B* | each | **50-7131** |
| Bottom Cover Washer | each | **50-7051** |
| Top O-ring | each | **50-8039** |
| Middle O-ring | each | **50-8038** |
| Bottom O-ring | each | **50-8037** |
| Quad Seal *11133A* | each | **50-8064-S** |
| Pushrod O-ring kit USA *(includes top, middle, and bottom o-rings for four pushrods)* | each | **93-4022** |
| Ball End USA 1,2,3 *Fits S&S adjustable with 5/16"-32 threads. (Manufactured after 2-1-1996)* | each | **93-5002** |
| Adjusting Unit Locknut *Fits S&S adjustable pushrods with early stock 9/32"-32 threads* | each | **33-5333** |
| Adjusting Unit Locknut *Fits S&S adjustable pushrods with 5/16"-32 threads. (Manufactured after 2-1-1996)* | each | **93-5003-S** |

### PUSHROD COVER KEEPER SETS FOR 1984–'99 BIG TWINS

| Length / Finish | | Application | Part # |
|---|---|---|---|
| 2.390" / Gloss Black | | | **930-0127** |
| 2.400" / Chrome *17950-48* | | | **93-4070**± |
| 2.500" | Chrome | | **93-4100**± |
| | Gloss Black | | **930-0142** |
| 2.600" | Chrome | 79", Retro 100" | **93-4101**± |
| | Gloss Black | | **930-0128** |
| 2.800" / Chrome *17950-86* | | | **93-4115**± |
| 2.900" | Chrome | | **93-4102**± |
| | Gloss Black | | **930-0126** |
| 3.000" / Chrome | | 100" | **93-4103**± |
| 3.100" | Chrome | 88", 107", 110", 111", 113" | **93-4104**± |
| | Gloss Black | | **930-0125** |
| 3.200" / Chrome | | 93", 89", 96", 117" | **93-4105**± |
| 3.330" / Chrome *17949-40, 17950-66* | | 98", 124" | **93-4106**± |
| 3.500" / Chrome | | 103" | **93-4107**± |
| 3.625" / Chrome | | | **93-4108**± |
| 4.250" | | | **93-4109*** |

**Custom extra long stainless steel 4.250", customer to cut to required length*
*Keepers are sold in sets of four. Keeper length for stock Harley-Davidson® with 80" engines is 3.330"*
± ⚠ WARNING: Cancer and Reproductive Harm – www.P65Warnings.ca.gov



**93-4016**



**93-4015**



**93-4017**



**93-4018**



**50-7131**



**93-4101**

*All S&S pushrod keepers are chromed steel, except part #93-4109. Keeper part #93-4109 is intended for unusually tall engines. It is manufactured of unchromed stainless steel to prevent rust or peeling after it is trimmed to the required length.*

*All reference to HD® Part #s is for identification purposes only. We in no way are implying that any of S&S® Cycle's products are original equipment parts or that they are equivalent to the corresponding HD Part # shown.*

# SIDEWINDER® .650" LIFT VALVE SPRINGS



## FITMENT
- 1984–'99 Evolution® with stock heads

## FEATURES AND BENEFITS
- Works well with cams up to .650" lift
- Manufactured from ultra clean high silicon Kobe alloy wire then micro shot peened and nitrided
- CNC machined 9˚ locks
- High performance conical single wire spring
- Chromoly forged retainers

## KIT CONTENTS
- Valve keepers, Top & Bottom collars, Springs, Shims

***NOTE:*** S&S recommends roller rocker arms be used with lifts over .585"

| S&S® .650" LIFT VALVE SPRINGS SPECIFICATIONS | | | | |
|---|---|---|---|---|
| Lift | Installed Height | Seat Force | Force @ Max Lift | Max RPM |
| .650" | 1.860" | 178 lb. | 376 lb. | 6500 |

**.650" LIFT VALVE SPRING KIT**

| Description | Part # |
|---|---|
| 1984–'99 Evolution® with stock heads | **900-0050** |

# STREET PERFORMANCE .585" VALVE SPRINGS

## FITMENT
- 1984–'99 Evolution® with stock heads
- All S&S Super Stock® heads

## FEATURES AND BENEFITS
- Single coil reduce the risk of valve float
- Suitable for high performance applications
- Accommodates camshaft lift to 0.585"

## KIT CONTENTS
- Springs, Top & Bottom Collars, Keepers, Shims

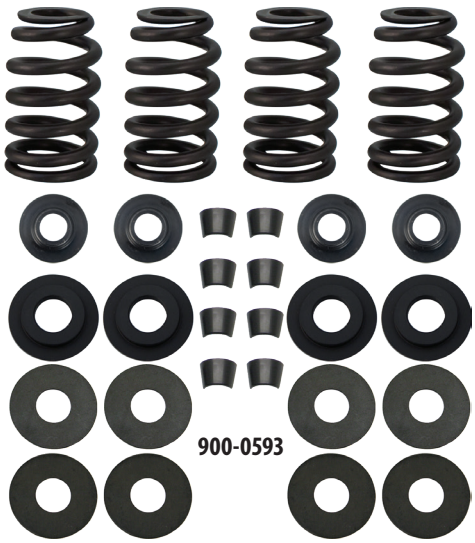


| S&S® STREET PERFORMANCE .585" VALVE SPRINGS SPECIFICATIONS | | | |
|---|---|---|---|
| Lift | Installed Height | Seat Force | Force @ Max Lift |
| .585" | 1.850" | 135 lb. | 325 lb. |

**STREET PERFORMANCE .585" SPRING KIT**

| Description | Part # |
|---|---|
| 1984–'99 big twins with stock heads | **900-0593** |
| All S&S Super Stock® heads | **900-0595** |

→ VALVE SPRING REPLACEMENT PARTS STARTING ON PAGE 69

# FORGED ROCKER ARMS



## FITMENT
- 1984–up big twins

## FEATURES AND BENEFITS

### ROLLER ROCKER ARMS
- Extremely durable rollers reduce valve side thrusting with high lift cams
- Superior wear and fatigue resistance even in the most demanding applications
- ¾" long bushings provide 50% more bushing support area than ½" long bushings

### STANDARD ROCKER ARMS
- ¾" long bushings provide 50% more bushing support area than ½" long bushings

## KIT CONTENTS
- 2 front and 2 rear rocker arms

### FORGED ROLLER ROCKER ARM KIT

| Description | Part # |
|---|---|
| 2 front and 2 rear rocker arms (1.625:1) | **900-4065A** |

*Adjustable pushrods must be used with S&S roller rocker arms to obtain proper valve clearance.*
*New rocker arm shafts are recommended for maximum performance and rocker life.*



### STANDARD FORGED ROCKER ARM KIT

| Description | Part # |
|---|---|
| 2 front and 2 rear rocker arms (1.625:1) | **900-4119A** |

*New rocker arm shafts are recommended for maximum performance and rocker life.*



**90-4036**

### ROCKER ARM SHAFTS

| Description | Part # |
|---|---|
| Set of 4 | **90-4036** *17611-83B* |
| Individual | **90-4006** *17611-83B* |

*New rocker arm shafts are recommended for maximum performance and rocker life.*



**90-4104**

### REPLACEMENT PARTS FOR FORGED ROCKER ARMS

| Rocker Arm Type | Description | Part # |
|---|---|---|
| Roller | Front exhaust or rear intake rocker arm | **900-4065FA** |
| | Rear exhaust or front intake rocker arm | **900-4065RA** |
| Standard | Front exhaust or rear intake rocker arm | **900-4119FA** *17375-83A* |
| | Rear exhaust or front intake rocker arm | **900-4119RA** *17360-83A* |
| Roller | Rebuild kits (rebuilds 4 rocker arms) | **90-4104** |
| Roller & Standard | Rocker arm bushing (¾" long) | **90-4014** |

***NOTES:*** S&S roller rocker arms are recommended for use with cams having more than 0.585" of lift.
Adjustable pushrods must be used with S&S roller rocker arms to obtain proper valve clearance.
New rocker arm shafts are recommended for maximum performance and rocker life.

*All reference to HD® Part #s is for identification purposes only. We in no way are implying that any of S&S® Cycle's products are original equipment parts or that they are equivalent to the corresponding HD Part # shown.*

# PERFORMANCE REPLACEMENT CYLINDER HEADS
## FOR 3½" AND 3⅝" BORE

### FITMENT
- 1984–'99 big twins
- Stock displacement
- Stock bore strokers
- Big bore engines up to 96"


106-4570

### FEATURES AND BENEFITS
- Compatible with stock or other flat topped pistons
- Heads can be decked .060" if higher compression is desired
- Port design increases flow, while maintaining velocity specifically designed for stock and small displacement engines
- Compatible with up to .585" lift cams with TDC lifts of .252" intake and .210" exhaust
- Stock diameter ports allows installation of original intake manifolds and exhaust
- Stock temperature sensor location for EFI equipped engines
- High compression is 76cc, low compression is 82cc in chamber

### KIT CONTENTS
- Two complete heads with valves and springs

**COMPRESSION RATIO COMPARISON CHART**

| Engine Size | S&S® Performance Replacement | | Stock HD® |
|---|---|---|---|
| | High Compression 76cc | Low Compression 82cc | |
| 96" | 10:1 | 9.5:1 | 9.75:1 |
| 89" | 9.4:1 | 8.9:1 | 9.25:1 |
| 80" | 8.8:1 | 8.4:1 | 8.5:1 |

**FLOW COMPARISON CHART**

| Cylinder Head Type | Valve Diameter | | .600" Lift Flow @ 10" | |
|---|---|---|---|---|
| | Intake | Exhaust | Intake | Exhaust |
| Stock HD® | 1.840" | 1.610" | 125cfm | 98cfm |
| S&S Performance Replacement | 1.900" | 1.605" | 142cfm | 109cfm |
| S&S® Super Stock® | 2.000" | 1.605" | 158cfm | 122cfm |

**PERFORMANCE REPLACEMENT CYLINDER HEADS**

| Finish | Low Compression 82cc* | High Compression 76cc |
|---|---|---|
| Natural | **106-3466** | **106-6059** |
| Wrinkle Black | **106-4570** *16696-92A* | **106-6064** |
| Polished | **106-4575** | – |

DISCLAIMER: NOT LEGAL FOR SALE OR USE IN CALIFORNIA ON ANY POLLUTION CONTROLLED MOTOR VEHICLE. NOT LEGAL FOR SALE OR USE NATIONWIDE ON ANY FEDERAL POLLUTION CONTROLLED MOTOR VEHICLE UNDER THE CLEAN AIR ACT.

**Used on V96 engines with flat top pistons*

**GASKET KITS FOR S&S PERFORMANCE REPLACEMENT CYLINDER HEADS**

| Bore Size | Part # |
|---|---|
| 3½" | **90-1905** |
| 3⅝" | **90-1906** |

***NOTE:*** S&S recommends that all clearances be checked with high lift cams, especially if the heads have been decked to increase compression.

→ **REPLACEMENT PARTS: SEE PAGE 82**

# SUPER STOCK™ CYLINDER HEADS
## FOR 3½" AND 3⅝" BORE


90-1504

### FITMENT
- 1984–'99 big twin with 3½" or 3⅝" bore
  *(not compatible with stock or flat top pistons)*

### FEATURES AND BENEFITS
- Machined with a stock bolt pattern
- Larger, more open combustion chamber presents less resistance to air flow around the valves
- 2.000" intake valves and 1.605" exhaust valves
- Special "cast to shape" intake ports with a special directional fin for improved air flow
- Precision CNC machined from heat treated aircraft quality aluminum castings

### KIT CONTENTS
- Complete head assembly with valves and S&S .650" lift springs

### ADDITIONAL PARTS (REQUIRED)

Super Stock® Pistons
3½" bore . . . . . See PAGE 44
3⅝" bore . . . . . See PAGE 43
Gasket Kit . . . . . See chart

→ **REPLACEMENT PARTS: SEE PAGE 83**

**ASSEMBLED S&S® SUPER STOCK™ HEAD KITS**

| Finish | Part # |
|---|---|
| Natural | **90-1004** USA1 |
| Wrinkle Black | **90-1504** USA1 |
| Polished | **90-1091** USA2 |

**GASKET KITS FOR S&S SUPER STOCK™ CYLINDER HEADS**

| Bore Size | Part # |
|---|---|
| 3½" | **90-1905** |
| 3⅝" | **90-1906** |

# SUPER STOCK™ CYLINDER HEADS
## FOR 4" BORE S&S ENGINES

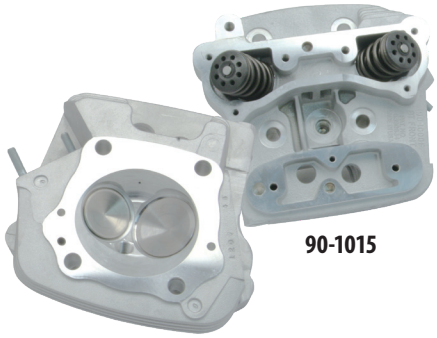
90-1015

### FITMENT
- 4" bore S&S V-Series engines

### FEATURES AND BENEFITS
- Special S&S 4" bore bolt pattern
- Machined for S&S manual or electric compression releases
- 2.000" intake valves and 1.605" exhaust valves
- Special "cast-to-shape" intake ports with a special directional fin for improved air flow
- Precision CNC machined from heat treated aircraft quality aluminum castings

### KIT CONTENTS
- 2 fully assembled cylinder heads with S&S valve springs (.640" or .585" lift)
- Threaded plugs to seal compression release holes

***NOTES:***
Due to expanded stud pattern, these heads will not fit on stock Evolution® engines
84cc heads are stock on 100" engines
93cc heads are stock on 107" and 113" engines
***Extra parts needed:*** Gasket Kit For S&S® 4" Bore Heads ..... **90-1909**

→ REPLACEMENT PARTS: SEE PAGE 84

**ASSEMBLED S&S® SUPER STOCK® HEAD KITS FOR 4" V-SERIES ENGINES**

| Description | Valve Springs | Finish | | |
|---|---|---|---|---|
| | | Natural | Wrinkle Black | Polished |
| 84cc | .650" lift | **90-1015** | - | - |
| 93cc | .650" lift | **90-1009** USA$_2$ | **90-1509** USA$_2$ | **90-1070** |
| | .585" lift | **90-1280** | **90-1281** | **90-1282** |

**ALL OTHER SPECIFICATIONS AND FINISHES ARE AVAILABLE THROUGH SPECIAL ORDER** **106-5695***
**Special Order: Download the Special Order Form at sscycle.com/soforms*

# CYLINDER HEADS
## FOR 4⅛" BORE V-SERIES ENGINES


90-1362

### FITMENT
- 4⅛" bore S&S V-Series engines

### FEATURES AND BENEFITS
- Redesigned cooling fins—reduces mechanical noise
- 2.00" intake - 1.605" exhaust
- Complete head with .650 springs

***NOTE:*** Replacement heads for existing engines with the old fin profile are available as complete front or rear head assemblies only, by special order.

→ REPLACEMENT PARTS: SEE PAGE 83

**91cc 4⅛" BORE S&S® REPLACEMENT CYLINDER HEADS**

| Finish | Part # |
|---|---|
| Natural | **90-1360** USA$_3$ |
| Wrinkle Black | **90-1361** USA$_3$ |
| Polished | **90-1362** USA$_3$ |

**GASKET KITS FOR S&S SUPER STOCK™ CYLINDER HEADS**

| Bore Size | Part # |
|---|---|
| 4⅛" | **90-1910** USA$_3$ |

**ALL OTHER SPECIFICATIONS AND FINISHES ARE AVAILABLE THROUGH SPECIAL ORDER** **90-1013***
**Special Order: Download the Special Order Form at sscycle.com/soforms*

# HEAD BOLTS WITH WASHERS

### HEAD BOLT INFORMATION CHART

| Length w/Washer | Washer Thickness | Head Bolt w/Washer | Washers Only |
|---|---|---|---|
| 1.690" | .250" | **93-3028** | **50-7091** |
| 1.840" | .150" | **93-3027** | **50-0418-S** |
| 1.920" | .250" | **93-3036** | **50-7091** |
| 2.070" | .150" | **93-3031** | **50-0418-S** |
| 2.220" | .250" | **93-3038** | **50-7091** |
| 2.370" | .150" | **93-3032** | **50-0418-S** |
| 3.134" | .250" | **93-3029** | **50-7091** |
| 3.284" | .150" | **93-3030** | **50-0418-S** |
| 3.501" | .250" | **93-3037*** | **50-7091** |
| 3.651" | .150" | **93-3033*** | **50-0418-S** |

**Drilled & tapped deeper to allow shortening for custom lengths.*



### HEAD BOLT WASHERS

| Thickness | Part # |
|---|---|
| .150" | **50-0418-S** |
| .250" | **50-7091** |



### HEAD BOLTS FOR HARLEY-DAVIDSON® 1984–'99 BIG TWINS

| Displacement | Cylinder Length | Cylinder Head Type | Short Bolt w/Washer | Long Bolt w/Washer | Head Bolt Kit |
|---|---|---|---|---|---|
| S&S® 89 / HD® 80 | 5.550" | S&S + Late 1985–'91 HD | **93-3027** | **93-3030** | **93-3010** USA |
| | | 1991–99 HD | **93-3036** | **93-3030** | **93-3014** USA |
| S&S V96 | 5.565" | S&S + Late 1985–'91 HD | **93-3027** | **93-3030** | **93-3010** USA |
| | | 1991–'99 HD | **93-3036** | **93-3030** | **93-3014** USA |
| S&S V100 | 4.745" | S&S | **93-3027** | **93-3037** | **93-3010** USA |
| S&S V103 | 5.750" | S&S + Late 1985–'91 HD | **93-3036** | **93-3037** | **93-3015** |
| | | 1991–'99 HD | **93-3038** | **93-3037** | **93-3016** |
| S&S V107 | 4.870" | S&S | **93-3038** | **93-3037** | **93-3016** |
| S&S V113 | 4.995" | S&S | **93-3032** | **93-3033** | **93-3013** |
| S&S V111 | 4.763" | S&S | – | **93-3030** | **93-3070** |
| S&S V117 | 4.888" | S&S | – | **93-3030** | **93-3070** |
| S&S V124 | 5.013" | S&S | – | **93-3033** | **93-3072** |

→ CALCULATING CUSTOM HEAD BOLT LENGTHS SEE PAGE 229



Dress up your engine with these magnetic chrome head bolt covers. Easy installation, no tools, no messy adhesives. A powerful magnet holds cover in place, yet allows easy removal. Chrome plated steel looks great on any engine, but is a must for polished engines. For S&S head bolts only.

### CHROME HEAD BOLT COVERS±

| | |
|---|---|
| Set of 4 | **50-0333** USA |

± ⚠ WARNING: Cancer and Reproductive Harm – www.P65Warnings.ca.gov

# BILLET AND DIE-CAST ROCKER COVERS

**GLOSS BLACK NOW AVAILABLE!**

## FITMENT

- 1984–'99 big twins
- S&S 4⅛" Bore

## FEATURES AND BENEFITS

- OEM-style "umbrella" fittings are included with billet rocker boxes for 1993–'99 big twin engines with cylinder head venting.
- Cast rocker boxes use an exclusive one way valve, which is built into the rocker cover gasket to control oil carry over in "head breathing" engines.
- S&S billet rocker covers are available in two finishes: show quality chrome or unfinished. Unfinished is ideal for powder coating and other custom cosmetic treatments. Die-cast covers are available in chrome  adn gloss black finish.
- Installation on stock and most comparable sized engines can be performed without removing the engine from the frame.

## KIT CONTENTS

- 2 covers
- All necessary gaskets, o-rings, and mounting hardware




### DIE-CAST ROCKER COVER KITS & REPLACEMENT GASKET KIT

| Application | Description | Part # |
|---|---|---|
| 1984–'99 big twins | Chrome Die-Cast Rocker Cover Kit USA 1,2 | **90-4095±** |
| | Replacement Gasket Kit | **90-4091** |
| S&S 4⅛" Bore Engines | NEW FOR 2020 Gloss Black Die-Cast Rocker Cover Kit | **900-0937** |
| | Chrome Die-Cast Rocker Cover Kit | **90-4110±** |
| | Replacement Gasket Kit | **90-4111** |

± ⚠ WARNING: Cancer and Reproductive Harm – www.P65Warnings.ca.gov



**S&S billet rocker covers**

### BILLET ROCKER COVER KITS & REPLACEMENT GASKET KIT

| Description | Part # |
|---|---|
| Chrome Billet Rocker Cover Kit | **90-4050±** |
| Unfinished Billet Rocker Cover Kit | **90-4055** |
| Replacement Gasket Kit | **90-4049** |

± ⚠ WARNING: Cancer and Reproductive Harm – www.P65Warnings.ca.gov

→ REPLACEMENT PARTS: SEE PAGE 86 & 87

***NOTES:*** In spite of the similarities between different S&S billet and cast rocker covers, not all parts are interchangeable. See PAGE 86 & PAGE 87 for correct Part #s.

The performance-oriented design of the billet rocker boxes permits valve lifts up to .710" with stock or S&S Super Stock® heads, and up to .810" with S&S Special Application heads. S&S roller rocker arms are recommended for high lift cams. Cast rocker boxes may require some minor clearancing, and it is recommended that they be ordered either polished or unfinished, so that clearancing may be done without disturbing chrome plated surfaces.

S&S billet rocker covers accept valve springs up to 1.660" O.D. without modification. Cast rocker boxes may require minor clearancing. Cylinder heads must be set up correctly for high-lift cams, and it remains the builder's responsibility to confirm all clearances.

Kits include front and rear cover assemblies with base and top cover, rocker shaft supports, gaskets and o-rings, and instructions.

# MANIFOLDS FOR CARBURETED ENGINES

## FITMENT

- 1984–'99 big twins
- S&S and other butterfly carbs
- CV carbs

## FEATURES AND BENEFITS

- Fits stock or S&S heads
- Available for stock engines and engines with longer or shorter cylinders
- Other lengths are available by special order
- Provision for VOES lines, MAP sensors, and cylinder head vents in 4⅛" bore engines



**160-1628**
*Big twins with stock or S&S Super Stock® ignition*



**16-2588**
*Engines with S&S IST® ignition (MAP Sensor ready manifold)*



**16-2594**
*S&S 4⅛" bore engines with Super Stock ignition*



**160-1736**
*CV style carbs*

### CV MANIFOLDS FOR 1984–'99 BIG TWINS

| Displacement | Cylinder Length | Size Number | Part # |
|---|---|---|---|
| 80", 89", 96" | 5.550" | 410 | **160-1736** |
| 88" | 5.375" | 397 | **160-1733** |
| 93" | 5.500" | 406 | **160-1734** |
| 100" | *4.745" | 387 | **160-1732** |
| 107" | *4.870" | 397 | **160-1733** |
| 113" | *4.995" | 406 | **160-1734** |
| Special Order | Specify | Specify | **169-1725A**** |

**Cylinder lengths reflect the use of S&S SA crankcases with +.500 deck height in S&S 4" bore engines.*
***Special Order: Download the Special Order Form at sscycle.com/soforms*

→ SEE PAGE 57 FOR U-RINGS FOR CONSTANT VELOCITY CARBS

***NOTE:*** S&S style o-rings must be used with these manifolds. S&S o-rings are slightly thinner to accommodate the larger S&S port diameter. Use of stock o-rings may damage the manifold. See PAGE 67.

### MANIFOLDS FOR CARBURETED 1984–'99 EVOLUTION® AND S&S ENGINES WITH STOCK OR S&S SUPER STOCK™ IGNITION — VOES FITTING

| Displacement | Cylinder Length | Size # | S&S ES, LS, Super A, B, E, Tillotson®, Bendix®, Keihin® | Super G |
|---|---|---|---|---|
| 88" | 5.375" | 397 | **160-1626** | **16-2526** |
| 93" | 5.500" | 406 | **160-1627** | **16-2527** |
| 80", 89", 96" | Stock (5.550") | 410 | **160-1628** | **16-2528** |
| 103" | 5.750" | 426 | **160-1632** | **16-2532** |
| 107" | *5.375" | 397 | **160-1626** | **16-2526** |
| 111" | 4.763" | 398 | **160-1760** | – |
| 113" | *5.500" | 406 | **160-1627** | **16-2527** |

**Cylinder lengths reflect the use of S&S SA crankcases with +.500 deck height in S&S 4" bore engines.*

### SPECIAL INTAKE MANIFOLDS FOR CARBURETED S&S® ENGINES FOR 1984–'99 BIG TWINS (REQUIRING MAP SENSOR MACHINING)

| Displacement | Cylinder Length | Size # | Super E | Super G |
|---|---|---|---|---|
| Evolution and S&S Engines with Intelligent Spark Technology (IST®) Ignition — MAP Sensor Port | | | | |
| 80", 89", 96" | 5.550" | 410 | **160-1718** | **16-2588** |
| 107" | 4.870" | 397 | **160-1643** | – |
| 111" | 4.763" | 398 | **160-4487** | **16-2604** |
| 113" | 4.995" | 406 | – | **16-2606** USA |
| 117" | 4.888" | 408 | – | **16-2603** |
| 124" | 5.013" | 417 | – | **16-2598** |
| 4⅛" Bore S&S Engines with Super Stock® Ignition — Extra Vacuum Fitting | | | | |
| 111" | 4.763" | 398 | **160-1760** | **16-2594** |
| 117" | 4.888" | 408 | – | **16-2595** |
| 124" | 5.013" | 417 | – | **16-2596** |

### REPLACEMENT PARTS FOR MANIFOLDS

| Description | Part # |
|---|---|
| Manifold Fitting VOES Rubber Cap 3⁄16" I.D. x 5⁄16" O.D. x 1⁄2" | **50-8372** |
| Manifold Vacuum Fitting | **16-0136-S** |



**16-0136-S**



**50-8372**



**16-0241**



**16-0242**

### U-RINGS FOR CONSTANT VELOCITY CARBS

| Description | Part # |
|---|---|
| U-ring, 40-42mm *27002-89* | **16-0242** |
| U-ring, 44-48mm | **16-0241** |

# MANIFOLDS FOR SINGLE BORE EFI ENGINES

## FITMENT

- Stock or S&S Hot Set Up Kit® equipped 1995–'98 big twins with S&S 52mm or 58mm throttle bodies, stock or S&S heads
- S&S V-Series engines



**16-5141**

***NOTE:*** The included S&S style o-ring, part #16-0235, must be used with these manifolds. S&S o-rings are slightly thinner to accommodate the larger S&S port diameter. Stock o-rings may damage the manifold.

### SINGLE BORE EFI MANIFOLDS

| Displacement | Cylinder Length | Size # | Part # |
|---|---|---|---|
| 80", 89", 96" | 5.550" | 410 | **16-5141** |
| V107" | 4.763" | 398 | **16-5136** |
| V111" | 4.763" | 398 | **16-5136** |
| V124" | 5.013" | 417 | **16-5139** |

*Manifolds include the required S&S style o-ring.*

# MANIFOLD CONVERSION KIT

### MANIFOLD CONVERSION SELECTION CHART

| Application | Cylinder Length | Size # | S&S ES, LS, Super B, Super E, Tillotson®, Bendix®, Keihin® |
|---|---|---|---|
| 1984–'89 big twin | 5.550" | 410 | **160-1658** |



### REPLACEMENT PARTS

| Description | | | Part # |
|---|---|---|---|
| Manifold | | | **160-1628** |
| Flanges | Front *27009-86A* | *each* | **16-0232** |
| | | *5 pack* | **16-0600** |
| | Rear *27010-86A* | *each* | **16-0233** |
| | | *5 pack* | **16-0601** |
| | Set (Front & Rear) | | **106-3516** |
| O-rings | | *each* | **16-0235** |
| | | *10 pack* | **16-0243** |
| 0.350" Spacers | | | **50-7044** |

***NOTES:*** S&S rigid mount manifolds are designed to improve intake tract air flow. These manifolds may change the way a stock carburetor and air cleaner assembly fit. This means that these components may require shimming and/or a slight change in mounting bracketing.

S&S manifold conversion kits for Harley-Davidson® Evolution® are designed to fit stock displacement engines.

Series #16-1600 manifolds included in Manifold Conversion Kits are machined with a 1⅞" throat and will fit stock Keihin® butterfly carburetors, all S&S 1¾" and 1⅞" carbs, and any other carburetors with the same mounting bolt pattern.

S&S style o-rings must be used with these manifolds. S&S o-rings are slightly thinner to accommodate the larger S&S port diameter. Use of stock o-rings may damage the manifold.



# BLACK SUPER E & G CARBURETORS

## FEATURES AND BENEFITS

- Exclusive black coating — heat and chemical resistant
- Offered in standard venturi or increased venturi diameter — specially machined for 7% more flow

### BLACK CARBURETORS FOR 1985–2005 BIG TWINS

| Fitment | Description | Part # |
|---|---|---|
| Increased venturi diameter *(7% more flow)* | Super E Carb | **110-0099** |
| | Super G Carb | **110-0100** |
| Standard venturi diameter | Super E Carb | **110-0133** |
| | Super G Carb | **110-0138** |

DISCLAIMER: NOT LEGAL FOR SALE OR USE IN CALIFORNIA ON ANY POLLUTION CONTROLLED MOTOR VEHICLE. NOT LEGAL FOR SALE OR USE NATIONWIDE ON ANY FEDERAL POLLUTION CONTROLLED MOTOR VEHICLE UNDER THE CLEAN AIR ACT

***NOTE:*** These black carb kits do not include air cleaners. Air cleaner options are available starting on PAGE 16.

# SUPER E & G COMPLETE CARBURETOR KITS

## FITMENT

- 1984–'99 big twins

## FEATURES AND BENEFITS

- Four fuel delivery ports — Better throttle response
- O-ring sealed idle mixture screw
- Increased air flow for more power
- Adjustable accelerator pump for quick throttle response and easy starting
- Utilization of the factory dual cable system ensures safe operation
- Direct replacement and high quality fit and finish — less down time and better performance
- Variable position enrichment starting system

## KIT CONTENTS

- Super E or G carburetor
- S&S intake manifold (For engines with stock length cylinders)
- Classic Teardrop air cleaner kit
- Mounting hardware
- Gaskets, seals, and hoses
- Instructions



**11-0419**

### SUPER E & G COMPLETE CARBURETOR KITS

| Fitment | Super E | Super G |
|---|---|---|
| 1993–'99 big twin | **11-0419** | **11-0434** |
| 1984–'92 big twin | **11-0407** | **11-0427** |

DISCLAIMER: NOT LEGAL FOR SALE OR USE IN CALIFORNIA ON ANY POLLUTION CONTROLLED MOTOR VEHICLE. NOT LEGAL FOR SALE OR USE NATIONWIDE ON ANY FEDERAL POLLUTION CONTROLLED MOTOR VEHICLE UNDER THE CLEAN AIR ACT

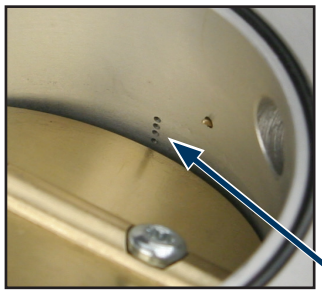

*As the throttle plate opens, it exposes more of these holes to engine vacuum and delivers more fuel as rpm increases. When you run out of holes in the intermediate system, the main jet comes in and handles fuel delivery for the higher rpm.*

### SUPER E & G PARTIAL KIT (NO MANIFOLD)

| Fitment | Super E | Super G |
|---|---|---|
| 1993–'99 big twin | **11-0442** | - |
| 1984–'92 big twin | **11-0440** | - |
| 1993–'99 big twin | - | **11-0446** |

*Does not include intake manifold. Partial kit designed for engines with longer/shorter than stock cylinders. Manifold is ordered separately.* *See PAGE 56*

DISCLAIMER: NOT LEGAL FOR SALE OR USE IN CALIFORNIA ON ANY POLLUTION CONTROLLED MOTOR VEHICLE. NOT LEGAL FOR SALE OR USE NATIONWIDE ON ANY FEDERAL POLLUTION CONTROLLED MOTOR VEHICLE UNDER THE CLEAN AIR ACT

→ REPLACEMENT PARTS: SEE PAGE 100

### SUPER E & G CARBURETOR ONLY

| Fitment | Super E | Super G |
|---|---|---|
| All Years & Models | **11-0420** | **11-0421** |

DISCLAIMER: NOT LEGAL FOR SALE OR USE IN CALIFORNIA ON ANY POLLUTION CONTROLLED MOTOR VEHICLE. NOT LEGAL FOR SALE OR USE NATIONWIDE ON ANY FEDERAL POLLUTION CONTROLLED MOTOR VEHICLE UNDER THE CLEAN AIR ACT

## OPTION

Optional cruise control adapter kits allows riders to keep factory cruise feature.



### CRUISE CONTROL ADAPTER KIT

| Fitment | Part # |
|---|---|
| 1998–'99 big twin | **11-2927** |

***NOTES:*** S&S® does not recommend polishing or chrome plating Super E & G carbs. Our repair department has seen many carbs with plugged passages due to polishing compounds, and some carbs that have been destroyed because the polishing or chrome plating had altered critical machined surfaces.

Recommended for closed circuit use only—S&S Super E & G carbs shown are not approved for use on motor vehicles operated on California public highways, or in other states where similar pollution laws may apply. The user shall determine the suitability of the product for his or her use and shall assume all risk and liability in connection therewith.

# TWO CABLE THROTTLE ASSEMBLIES

The S&S two cable throttle assemblies are high quality "pull open – pull close" type throttles designed for use on any two cable carburetor installations on bikes with 1" O.D. handlebars. A special soft plastic material used to mold the grips makes them look and feel exactly like stock grips. There are four different assemblies available to make installation on most chassis easy.



## TWO CABLE THROTTLE REQUIRED

S&S Super E and G carburetors require the use of a two cable, pull open–pull closed throttle assembly. Any chassis including 1980 and earlier stock models equipped with a single cable throttle mechanism requires conversion to a two cable, pull open–pull closed type. S&S offers high quality two cable throttle assemblies for this purpose. Stock big twin models from 1981 to present have a two cable throttle and should not require changing. Super E and G Carb kits for 1990 and later models come with the new longer throttle cable guide bracket which allows the use of the stock CV style throttle cables.

***NOTE:*** The chart on this page is used only when using throttle cable bracket part #11-2339. This bracket is standard on all S&S Super E & G carburetor kits for big twins 1989 and earlier and all kits for Harley-Davidson® Sportster® models with the exception of the kit for 2004–'05 models. Carburetor kits for 1990 and later big twin models come with the longer cable bracket part #11-2338 for use with stock CV throttle cables. Super E and G carburetors ordered for big twin models 1981 and later are being shipped with the correct throttle cable bracket to fit the stock cables. Big twin carbs that are not year specific will be shipped with both cable brackets. All Sportster models 1988–'03 will still require conversion to butterfly style cables.

### THROTTLE CABLE APPLICATION CHART

| Application | Fastening Method | Length Total Housing | Length Vinyl Housing | Open Side | Close Side |
|---|---|---|---|---|---|
| FX and FL models 1985 and earlier*<br>Big Twin models 1995 and earlier* | Threaded | 36" | 32" | **19-0432** | **19-0433** |
| To 1995 Harley-Davidson® Softail® (FXSTC, FXST, FLSTC, FLSTF)<br>1986–'94 FXR, 1993-'95 Dyna® | Threaded | 39" | 35" | **19-0434** | **19-0435** |
| To 1995 All FLT models | Threaded | 48" | 44" | **19-0462** | **19-0463** |
| To 1995 custom application | Threaded | 42" | 38" | **19-0446** | **19-0447** |
| 1996–'99 Softail (FXSTS, FXSTC, FLSTC, FLSTF)<br>1996–'99 Dyna® | Snap-in | 39" | 35" | **19-0438** | **19-0439** |
| 1996–'99 All FLT models | Snap-in | 48" | 44" | **19-0464** | **19-0465** |
| 1996–'99 custom application | Snap-in | 42" | 38" | **19-0440** | **19-0441** |

**1980 and earlier must be converted to dual cable throttle assembly*
*1998 and later required Harley-Davidson® throttle assembly #71831-96 .*

### REPLACEMENT PARTS

| Description | Part # |
|---|---|
| S&S Universal Throttle Cable | **106-3520** |
| Throttle Grip Clamp Set 1985–'95 | **106-3519** |
| Top Throttle Grip Clamp only | **19-0222** |
| Bottom Throttle Grip Clamp only | **19-0220** |
| Throttle Grip Clamp Screw<br>*(Fits S&S throttle assemblies: Part #19-0448, #19-0449, #19-0482, #19-0450, , #19-0229)* | **50-0043** |
| Throttle Grip Set | **106-3521** |
| Right Hand Grip only | **19-0225** |
| Left Hand Grip only | **19-0226** |
| Cable Adjuster<br>*(Fits S&S throttle assembly part #19-0229)* | **19-0223** |
| Cable Adjuster Jam Nut<br>*(Fits S&S throttle assembly part #19-0229)* | **19-0227** |
| Handlebar Spacing Sleeve<br>4" x 1" O.D. — converts ⅞" handlebars to 1" O.D. | **19-0235** |



**106-3521**



**19-0235**



**106-3520**



**106-3519**



**19-0223**
**19-0227**
**50-0043**

*All reference to HD® Part #s is for identification purposes only. We in no way are implying that any of S&S® Cycle's products are original equipment parts or that they are equivalent to the corresponding HD Part # shown.*

# JETS & CARB REBUILD KITS
## FOR S&S SUPER E & G CARBURETORS

For those who need to rejet their carburetor because of engine modifications, exhaust modifications, or changes in altitude, we have extra jet kits available which are designed to cover most jetting situations.

### DEALER JET KITS±

| Description | Part # |
|---|---|
| S&S Carb Parts Kit *(Contains needed parts to maintain S&S Super E and G carburetors)* | **11-3103** |
| S&S Jet Kit *(Includes 3 each of all intermediate jets and 5 each of all main jets, plus a main jet tool)* | **11-3102** |

± ⚠ WARNING: Cancer and Reproductive Harm – www.P65Warnings.ca.gov




**11-3103±**

### JET PACKS±

| Description | Part # |
|---|---|
| Low Range Jet Pack — For jetting most stock and moderate performance engines | |
| *Includes one each intermediate jets (.025", .0265", .028", .0295") one each main jets (.062", .064", .066", .068", .070", .072", .074").* | **11-7270** |
| High Range Jet Pack — For jetting some stock and all performance engines | |
| *Includes one each intermediate jets (.0295", .031", .032", .033") and one each main jets (.072", .074", .076", .078", .080", .082", .084").* | **11-7271** |
| Master Jet Pack — For jetting all Super B, E, and G equipped engines | |
| *Includes one each intermediate jets (.025", .0265", .028", .0295", .031", .032", .033") and one each main jets (.062", .064", .066", .068", .070", .072", .074", .076", .078", .080", .082", .084").* | **11-7272** |

± ⚠ WARNING: Cancer and Reproductive Harm – www.P65Warnings.ca.gov




**11-3102±**

### INTERMEDIATE JETS — SERIES #94 INDIVIDUAL SELECTION±

| Size | QTY | Part # | Size | QTY | Part # |
|---|---|---|---|---|---|
| .025 | each | **11-0250** | .032 | each | **11-0320** |
| | 3 pack | **11-7107** | | 3 pack | **11-7112** |
| .0265 | each | **11-0265** | .033 | each | **11-0330** |
| | 3 pack | **11-7108** | | 3 pack | **11-7113** |
| .028 | each | **11-0280** | .036 | each | **11-0360** |
| | 3 pack | **11-7109** | | 3 pack | **11-7114** |
| .0295 | each | **11-0295** | .040 | each | **11-0400** |
| | 3 pack | **11-7110** | | 3 pack | **11-7115** |
| .031 | each | **11-0310** | Blank | each | **11-0000** |
| | 3 pack | **11-7111** | | | |

± ⚠ WARNING: Cancer and Reproductive Harm – www.P65Warnings.ca.gov



**11-7272±**



**106-3517±**

Early Series #94 gas jets were stamped with single digit numbers. Conversions for these numbers are:

1.....025"
2.....028"
3.....031"
4.....033"
5.....036"
6.....040"

***NOTE:*** No returns or exchanges on jets.

## MAIN JETS — SERIES #72 INDIVIDUAL SIZE SELECTION±

| Size | QTY | Part # | Size | QTY | Part # |
|---|---|---|---|---|---|
| .040 | each | 11-4040 | .080 | each | 11-4080 |
| | 5 pack | 11-7220 | | 5 pack | 11-7240 |
| .042 | each | 11-4042 | .082 | each | 11-4082 |
| | 5 pack | 11-7221 | | 5 pack | 11-7241 |
| .044 | each | 11-4044 | .084 | each | 11-4084 |
| | 5 pack | 11-7222 | | 5 pack | 11-7242 |
| .046 | each | 11-4046 | .086 | each | 11-4086 |
| | 5 pack | 11-7223 | | 5 pack | 11-7243 |
| .048 | each | 11-4048 | .088 | each | 11-4088 |
| | 5 pack | 11-7224 | | 5 pack | 11-7244 |
| .050 | each | 11-4050 | .090 | each | 11-4090 |
| | 5 pack | 11-7225 | | 5 pack | 11-7245 |
| .052 | each | 11-4052 | .092 | each | 11-4092 |
| | 5 pack | 11-7226 | | 5 pack | 11-7246 |
| .054 | each | 11-4054 | .094 | each | 11-4094 |
| | 5 pack | 11-7227 | | 5 pack | 11-7247 |
| .056 | each | 11-4056 | .096 | each | 11-4096 |
| | 5 pack | 11-7228 | | 5 pack | 11-7248 |
| .058 | each | 11-4058 | .098 | each | 11-4098 |
| | 5 pack | 11-7229 | | 5 pack | 11-7249 |
| .060 | each | 11-4060 | .100 | each | 11-4100 |
| | 5 pack | 11-7230 | | 5 pack | 11-7250 |
| .062 | each | 11-4062 | .102 | each | 11-4102 |
| | 5 pack | 11-7231 | | 5 pack | 11-7251 |
| .064 | each | 11-4064 | .104 | each | 11-4104 |
| | 5 pack | 11-7232 | | 5 pack | 11-7252 |
| .066 | each | 11-4066 | .106 | each | 11-4106 |
| | 5 pack | 11-7233 | | | |
| .070 | each | 11-4070 | .110 | each | 11-4110 |
| | 5 pack | 11-7235 | | 5 pack | 11-7255 |
| .072 | each | 11-4072 | .115 | each | 11-4115 |
| | 5 pack | 11-7236 | | 5 pack | 11-7256 |
| .074 | each | 11-4074 | .120 | each | 11-4120 |
| | 5 pack | 11-7237 | | 5 pack | 11-7257 |
| .076 | each | 11-4076 | | | |
| | 5 pack | 11-7238 | | | |
| .078 | each | 11-4078 | | | |
| | 5 pack | 11-7239 | | | |

± ⚠ WARNING: Cancer and Reproductive Harm – www.P65Warnings.ca.gov

## MAIN JET AIR BLEED KIT± (ONE JET EACH SIZE)

| Sizes | Part # |
|---|---|
| .042"– .060" | 106-3517 |
| .084"– .120" | 106-3518 |

± ⚠ WARNING: Cancer and Reproductive Harm – www.P65Warnings.ca.gov

## S&S® CARBURETOR REBUILD KITS

To insure that you continue to get the utmost in performance from your S&S carburetor, we have put together a series of rebuild kits that are designed to provide the proper parts to return a worn carburetor to top shape. We have assembled different types of kits to cover the different degrees of rebuild necessary.

## MASTER REBUILD KITS

Master rebuild kits contain a body rebuild kit, accelerator pump rebuild kit (Super E and G only), all new fasteners, springs, idle mixture screw, seat, and needle assembly. Everything needed to completely rebuild one carburetor.

### MASTER REBUILD KIT±

| Description | Part # |
|---|---|
| Super E | 11-2923 |
| Super G | 11-2924 |

± ⚠ WARNING: Cancer and Reproductive Harm – www.P65Warnings.ca.gov

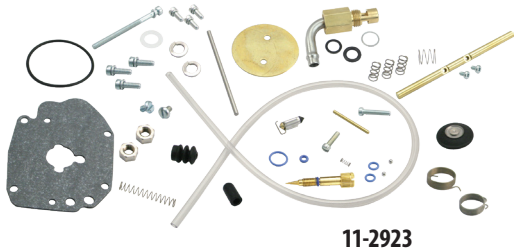

11-2923

## *BODY REBUILD KITS*

Body rebuild kits for Super E and G carbs also contain throttle shaft nuts, nylon washers, accelerator pump o-ring, and accelerator pump boot. Body rebuild kits for Super E and G carbs do not contain throttle shaft bushings since these carbs have stainless steel throttle shaft bushings already installed.

### BODY REBUILD KIT±

| Description | Part # |
|---|---|
| Super E | 11-2906 |
| Super G | 11-2907 |



11-2907

± ⚠ WARNING: Cancer and Reproductive Harm – www.P65Warnings.ca.gov

## *BASIC REBUILD KIT*

A gasket and seal kit for low mileage Super E & G carbs. Perfect to reassemble carbs taken apart for inspection and cleaning.

### BASIC REBUILD KIT±

| Description | Part # |
|---|---|
| Super E & G | 110-0067 |

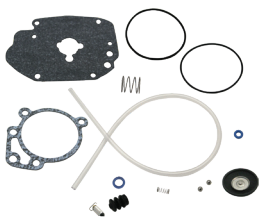

± ⚠ WARNING: Cancer and Reproductive Harm – www.P65Warnings.ca.gov

## ACCELERATOR PUMP REBUILD KITS

Accelerator pump rebuild kits contain diaphragm, diaphragm spring, check balls, check ball spring, pump pushrod, and required hardware and o-rings.

### ACCELERATOR PUMP REBUILD KIT

| Description | Part # |
|---|---|
| Super E & G | 11-2918 |



# COMPRESSION RELEASES

## FITMENT

- S&S cylinder heads with compression release machining

## OPTIONS:

### MANUAL RELEASE:

Activated by a cable similar to a choke control, this slick system can be used with any style rocker cover.

### ELECTRIC RELEASE:

Solenoid operated, this system automatically opens and closes when the starter button is pressed and released. Convenient and simple, this is the best setup for big displacement high compression bikes. Requires S&S die cast rocker covers.



90-4915



55-1009

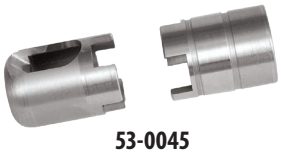

53-0045



90-4916

### COMPRESSION RELEASE KITS

| Description | Part # |
|---|---|
| Electric | **90-4915** |

### TOOLS AND ACCESSORIES

| Description | Part # |
|---|---|
| S&S Two-Piece Socket Kit:<br>*Allows in-frame installation of S&S compression releases and protects wiring from damage during installation.* | **53-0045** |
| S&S Compression Release Hole Plug | **90-4916** |

### REPLACEMENT PARTS

| Description | Part # |
|---|---|
| Silicone Solenoid Caps | **55-1009** |
| Wiring Harness USA 2,3 | **55-1010** |
| Electric Compression Release Assembly | **90-4914** |

***NOTES:*** S&S rocker covers must be used with electric compression releases due to clearance requirements for the solenoids.

Rocker covers must be removed when installing S&S® compression releases. If lack of frame clearance prevents removal of rocker covers, engine must be removed from frame for compression release installation.

In most cases, S&S compression releases can be installed while the engine is in the frame with the special S&S two-piece socket kit, part #53-0045 .

If cylinder heads are machined for S&S compression releases, but compression releases are not used, special plug part #90-4916 (two required) must be installed to seal the machined hole.

Stock cylinder heads cannot be machined for S&S compression releases because there is not enough material in critical areas.

# HIGH OUTPUT COILS

### HIGH OUTPUT COILS

| S&S High Output 3.0Ω Single Fire Coil | Part # |
|---|---|
| *The perfect complement for S&S IST ignition systems. This single fire coil is actually two separate coils in a single package. Coil impedance is 3Ω per coil.* | **55-1571** |
| S&S High Output 0.5Ω Single Fire Coil USA 4 | **55-1576** |
| *High output 0.5Ω single fire coil for S&S IST ignition.* | |



55-1571



55-1576

# HI-4N PERFORMANCE IGNITION

### *FITMENT*
- 1984–1999 big twins

### *FEATURES AND BENEFITS*
- One piece machined aluminum housing reduces vibration and improves heat dissipation and reliability
- Improved kick start algorithm designed to start as easily as points
- BCD switches with solid detent and legible marking allow easy and repeatable adjustments of mode, advance rate, and rev limit
- Single-fire and dual-fire function built into a single module
- Flexible wiring harness makes installation easier
- Initial timing marks allow precise adjustment and reinstallation
- Sensor covers integrated into housing to provide protection during installation



550-0502

**HI-4N PERFORMANCE IGNITION**

| Fitment | Part # |
|---|---|
| Ignition only | **550-0501** |
| Kit Includes S&S® HI-4N Ignition, Single-Fire Coil, and 8.8mm double silicone, premium quality spark plug wires | **550-0502** |

DISCLAIMER: NOT LEGAL FOR SALE OR USE IN CALIFORNIA ON ANY POLLUTION CONTROLLED MOTOR VEHICLE. NOT LEGAL FOR SALE OR USE NATIONWIDE ON ANY FEDERAL POLLUTION CONTROLLED MOTOR VEHICLE UNDER THE CLEAN AIR ACT

# SUPER STOCK™ IGNITIONS

### FITMENT
- V-Series engines
- V80, V92, V96, V100, V107, V111, V113, V117, V124, V145

### FEATURES & BENEFITS
- Electric-start mode allows the pre-ignition cranking to be set anywhere from 1 to 4 engine revolutions (only available with current modules — earlier modules cannot be updated)
- Pre-programmed ignitions are custom tailored for a specific S&S engine — no need for adjustments
- Single fire operation — requires a single fire coil for single spark plug applications
- Dual plugged applications require a pair of two tower coils or a single four tower coil
- Minimum 3.0Ω primary resistance
- Overload and short circuit protected
- VOES switches to less aggressive curve under load or hard acceleration
- 6300 rpm rev-limiter
- 24-hour break-in rev-limiter — prevents damage during break-in
- Data logging diagnostic capabilities




***NOTES:*** S&S Super Stock ignition systems are available in complete ignition kits and as replacement modules. S&S single fire ignition coils are available separately.

Keep in mind that the curves are preset for a specific S&S engine, and that modules intended for one engine may not yield optimum results when used on another configuration.

**SUPER STOCK® IGNITION MODULE AND KITS**

| Engine | Kit | Module |
|---|---|---|
| V80 | **550-0140** | **550-0139** |
| V96 | **55-1354** | **55-1344** |
| V100, V107,V113 | **55-1355** | **55-1345** |
| V111, V117, V124 | **55-1356** | **55-1346** |

DISCLAIMER: NOT LEGAL FOR SALE OR USE IN CALIFORNIA ON ANY POLLUTION CONTROLLED MOTOR VEHICLE. NOT LEGAL FOR SALE OR USE NATIONWIDE ON ANY FEDERAL POLLUTION CONTROLLED MOTOR VEHICLE UNDER THE CLEAN AIR ACT

*NOTE – Only modules and kits with the above Part #s have the updated features.*

**SUPER STOCK® IGNITION KIT REPLACEMENT PARTS**

| Description | Part # |
|---|---|
| Pick-up Cup and Mounting Screw | **55-1247**± |
| Connector Kit | **55-1249** USA[1] |
| VOES Switch with Hardware | **55-1248** USA[1] |
| VOES Hose, 9" | **19-0395** USA |
| VOES Manifold Fitting | **16-0136-S** |
| VOES Hose Tee | **50-8124-S** |
| **Optional Parts** | |
| S&S Single Fire Coil (3.0Ω) | **55-1571** |

± WARNING: Cancer and Reproductive Harm – www.P65Warnings.ca.gov

# INNER PRIMARY BEARING RACE

## FITMENT

- All 1991–'06 big twins *(except '06 Dyna®)*

## FEATURES AND BENEFITS

- Will not "walk" on transmission mainshaft
- Prevents costly damage to mainshaft seal, output gear & output gear bearing
- Simple to install



**INNER PRIMARY BEARING RACE**

| Fitment | Part # |
|---|---|
| All 1991–'06 big twins *(except '06 Dyna®)* | **56-5089** |

→ **ANY JOB IS EASY WITH THE RIGHT TOOLS:** S&S INNER BEARING RACE INSTALLER, SEE PAGE 208

# GATES® HIGH STRENGTH FINAL DRIVE BELTS

S&S final drive belts by Gates are available with 14mm pitch in 1½" and 1⅛" widths. See the chart below and match the width and number of teeth required for your vehicle. You can find this information in the vehicle service manual.




**SECONDARY DRIVE BELTS (14MM PITCH)**

| Teeth | 1⅛" Wide | 1½" Wide |
|---|---|---|
| 125 | **106-0357** | – |
| 126 | – | **106-0348** |
| 127 | – | **106-0349** |
| 128 | **106-0358** | **106-0350** |
| 130 | **106-0359** | **106-0351** |
| 132 | **106-0360** | **106-0352** |
| 133 | **106-0361** | **106-0353** |
| 135 | **106-0362** | **106-0354** |
| 136 | – | **106-0355** |
| 139 | **106-0363** | **106-0356** |
| 149 | **106-1338** | **106-2695** |
| 156 | – | **106-2827** |

## ATTENTION CUSTOM BIKE MANUFACTURERS! SPECIAL ORDER BELTS FROM S&S® AND GATES®

Special belt sizes, private brand labeling, and assistance with belt drive design, are available to custom performance OEM's and aftermarket bike builders, through S&S. These products and services are available for licensed motorcycle manufacturers only, and a minimum order quantity may be required.

Drive belts with your company name imprinted on them are a perfect way to show off your brand. Any belt size currently available in the S&S catalog, as well as the special ordered sizes, can be specially branded. Minimum order quantities would apply.

Whether you're designing a completely new chassis, or simply need a replacement belt, S&S can help you find the belt you're looking for. Through the combined efforts of Gates and S&S, S&S can now provide customers with the technical assistance they need for designing new secondary belt drive systems. In addition, S&S can help you determine required tooth count for your existing chassis design, based on the pulley center-to-center distances and pulley tooth counts.

All belts have a 14mm tooth pitch, and are made of the super strong Gates Carbon X3N material. Belts are available in three standard widths of 1.125", 1.5"and 1.181" (30mm), but can be special ordered in nearly any width for a nominal charge. If you want a belt with a special tooth count, they are also available (see the special order chart for availability).

Contact your S&S Customer Support Representative for more information.

**BELTS AVAILABLE BY SPECIAL ORDER (14MM PITCH)**

| Tooth Count | 1.181" (30mm) Width* | 1.25" Width* |
|---|---|---|
| 125 | ● | |
| 126 | ● | ● |
| 127 | ● | ● |
| 128 | ● | |
| 130 | ● | |
| 131 | ● | ● |
| 132 | ● | |
| 133 | ● | |
| 135 | ● | |
| 136 | ● | ● |
| 137 | ● | ● |
| 139 | ● | |
| 140 | ● | ● |
| 149 | ● | |
| 150 | ● | ● |
| 151 | ● | ● |
| 152 | ● | ● |
| 156 | ● | |

**Minimum order required: 1.181" (30mm) – 16 belts; 1.25" – 17 belts.*

# GASKETS

## REBUILD GASKET KITS FOR S&S V-SERIES 1984–'99 ENGINES AND HOT SET UP KIT®

| | |
|---|---|
| 4⅛" | **106-0964** |
| 4" | **106-1020** |
| 3⅝" | **106-0992** |
| 3½" | **310-0928** |

## TOP END GASKET KITS V-SERIES 1984–'99

| | |
|---|---|
| 4⅜" | **90-9511** |
| 4⅛" | **90-9506** |
| 4" | **90-9503** |
| 3⅝" | **90-9502** |
| 3½" | **900-0974** |

## CYLINDER HEAD GASKET KITS V-SERIES 1984–'99

| | | |
|---|---|---|
| 4⅛" | .043" Micropore | **90-1910** |
| 4" | .045" Micropore | **90-1909** |
| 3⅝" | | **90-1906** |
| 3½" | | **90-1905** |
| 3½" | .030" Layered Steel | **900-0532** |

## HEAD GASKETS V-SERIES 1984–'99

| | | | |
|---|---|---|---|
| 4⅛" | .043" Micropore | *each* | **93-1047-S** |
| | | *2 pack* | **930-0100** |
| | | *10 pack* | **93-1073** |
| 4" | .043" Micropore | *each* | **93-1040-S** |
| | | *2 pack* | **930-0087** |
| | | *10 pack* | **93-1071** |
| 3⅝" | .045" Micropore | *each* | **93-1037-S** |
| | | *2 pack* | **930-0091** |
| | | *10 pack* | **93-1052** |
| 3⅝" | .0625" Micropore | *each* | **93-1016-S** |
| | | *2 pack* | **930-0097** |
| | | *10 pack* | **93-1053** |
| 3½" | .045" Micropore *16770-84D, 16770-84F* | *each* | **93-1011-S** |
| | | *2 pack* | **930-0098** |
| | | *10 pack* | **93-1024** |
| 3½" | .0625" Micropore *16770-84D, 16770-84F, 10773-85* | *each* | **93-1313-S** |
| | | *10 pack* | **93-1051** |
| 3½" | .030" Layered Steel | *each* | **900-0530** |

**106-0964**

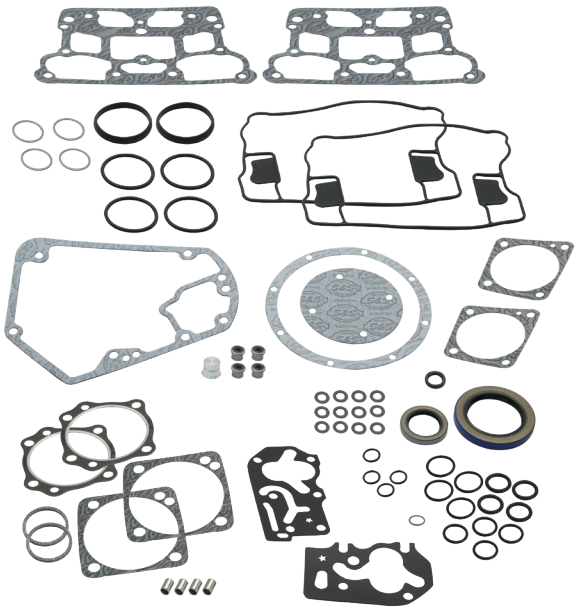

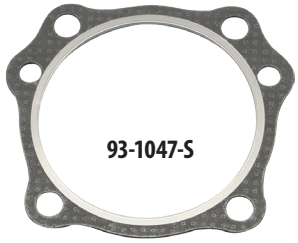

**93-1047-S**

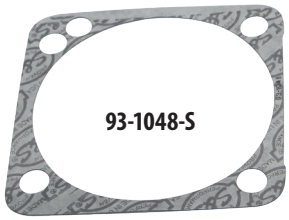

**93-1048-S**



**106-5029**



**900-0338**

## BASE GASKETS AND O-RINGS V-SERIES 1984–'99

| | | | |
|---|---|---|---|
| 4⅜" | .018" Micropore | *2 pack* | **93-1082** |
| 4⅛" | .018" Micropore | *each* | **93-1048-S** |
| | | *2 pack* | **930-0099** |
| | | *10 pack* | **93-1074** |
| 4" | .018" Micropore | *each* | **93-1031-S** |
| | | *2 pack* | **930-0094** |
| | | *10 pack* | **93-1067** |
| 3⅜" | .018" Micropore | *each* | **93-1033-S** |
| | | *2 pack* | **930-0093** |
| | | *10 pack* | **93-1064** |
| 3½" | .018" Micropore | *each* | **93-1035-S** |
| | | *2 pack* | **930-0092** |

## EXHAUST GASKETS

| | | |
|---|---|---|
| 1984–up Big Twins *65324-83B, 65324-83A* | *each* | **106-5029** |
| | *10 pack* | **93-1072** |

## VALVE GUIDE SEALS

| | | |
|---|---|---|
| 1984–'02 Big Twin and 1986–'00 Sportster® Models | *each* | **900-0338** |
| | *8 pack* | **90-2158** |

## ROCKER BOX GASKET KITS AND INDIVIDUAL GASKETS

### S&S Billet Rocker Boxes

| | | |
|---|---|---|
| Gasket Kit | | **90-4049** |
| O-ring, (-223), 1.625" ID x 1.875" OD, Viton | | **50-8044** |
| Valve Cover Seal *26856-89, 26856-89A* | | **90-4030** |
| Gasket, Rocker Cover, S&S® Billet, O-ring, 1984–'99 | | **90-4048** |
| Gasket, Bottom, Rocker Cover, 1984–99 bt | *each* | **900-0538** |
| | *2 pack* | **900-0592** |

### S&S Die Cast Rocker Boxes - S&S 4⅛" Bore Engines

| | | |
|---|---|---|
| Gasket Kit | | **90-4111** |
| O-ring, (-223), 1.625" ID x 1.875" OD, Viton | | **50-8044** |
| Gasket, Bottom, Rocker Cover, 4⅛" 1984–up *16719-99B* | *each* | **90-4071-S** |
| | *2 pack* | **90-4071** |
| | *10 pack* | **90-4099** |
| Gasket, Rocker Cover, S&S® Die Cast, O-ring, 1984–up | | **90-4079** |

### S&S Die Cast Rocker Boxes - 3½", 3⅜" and 4" Bore Engines

| | | |
|---|---|---|
| Gasket Kit | | **90-4091** |
| O-ring, (-223), 1.625" ID x 1.875" OD, Viton | | **50-8044** |
| Gasket, Bottom, Rocker Cover, 1984–99 bt | *each* | **900-0538** |
| | *2 pack* | **900-0592** |

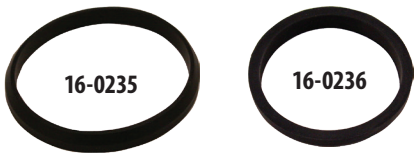


| | |
|---|---|
| Gasket, Rocker Cover, S&S® Die Cast, O-ring, 1984–up | **90-4079** |

### Stock Rocker Boxes

| | |
|---|---|
| Gasket Kit, Rubber, 1984–'91 *17038-90* | **90-4046** |
| Gasket Kit, Rubber, 1992–'99 | **90-4047** |
| Gasket,Top,Rocker Cover,Rubber,1992–'99 bt *17356-92* | **90-4045** |
| Gasket,Middle Outer,Rocker Cover,Rubber,1992–'99 bt *17355-92* | **90-4044** |

## LOWER END GASKETS AND SEALS

| | | | |
|---|---|---|---|
| Gear Cover Gasket For 1970–'99 *25225-93A, 25225-93B, 25225-70C, 25257-80* | | *each* | **31-2107** |
| | | *10 pack* | **106-0232** |
| Camshaft Oil Seals, 1970–'99 *83162-51* | | *each* | **31-4022** |
| Tappet Cover Gasket | Set (includes Front & Rear) *18633-48* | *each* | **33-5302** |
| | | *10 pack* | **33-5313** |
| | Front *18634-48C* | *each* | **33-5302F** |
| | | *10 pack* | **33-5313F** |
| | Rear *18633-48B, 18633-48D* | *each* | **33-5302R** |
| | | *10 pack* | **33-5313R** |

## PUSHROD O-RINGS

| | | |
|---|---|---|
| O-ring,Kit,Pushrod Cover,1984–'99 bt, 1986–2003 xl | | **93-4022** |
| Top O-ring *11293, 11157, 11101, 11190* | | **50-8039** |
| Middle O-ring *11132A* | | **50-8038** |
| Bottom O-ring *11145A* | | **50-8037** |
| Oil Jet O-ring - S&S 4⅛" Bore Engines | *each* | **50-8270** |
| | *5 pack* | **50-8275** |

## SPROCKET SHAFT SEAL

| | | |
|---|---|---|
| 1970–up bt *12026B* | *each* | **31-4010** |
| | *5 pack* | **31-4110** |

## OIL PUMP GASKETS

### S&S Standard Cast and Billet Oil Pumps

| | |
|---|---|
| 1936–'91 Standard | **31-6271** |
| 1992–'99 Standard | **31-6273** |

**SEE PAGE 80 FOR STANDARD OIL PUMP MASTER REBUILD KITS**

*All reference to HD® Part #s is for identification purposes only. We in no way are implying that any of S&S® Cycle's products are original equipment parts or that they are equivalent to the corresponding HD Part # shown.*

# CONTINUED GASKETS

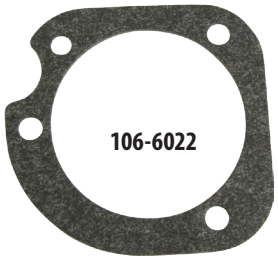
106-6022

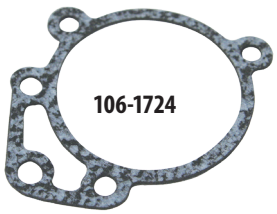
106-1724

| S&S High Volume High Pressure (HVHP) Oil Pumps | |
|---|---|
| 1984–'91 Big Twin HVHP *31-6306* | **31-6308** |
| 1992–'99 Big Twin HVHP | **31-6299** |

**SEE PAGE 81 FOR HIGH VOLUME HIGH PRESSURE OIL PUMP MASTER REBUILD KITS**

| Oil Pump Drive Shaft Seal | |
|---|---|
| S&S Standard Cast and Billet Oil Pumps *26227-58* | **31-6005** |
| S&S High Volume High Pressure (HVHP) Oil Pumps | **31-6064-S** |

## FUEL SYSTEM GASKETS

| Manifold Seals | | | |
|---|---|---|---|
| S&S Manifold O-ring | | *each* | **16-0235** |
| | | *10 pack* | **16-0243** |
| Stock Manifold O-ring 26995-86B, 26995-86A, 26992-99 | | *each* | **16-0236** |
| | | *10 pack* | **16-0244** |
| Cap, Rubber, Manifold, Fitting | | | **50-8372** |

## CLASSIC TEARDROP AIR CLEANER

| | | | |
|---|---|---|---|
| Back Plate Gasket | | *each* | **106-1724** |
| | | *10 pack* | **106-2328** |
| Vent Seal Washers, Silicone Coated Steel | ½" | *each* | **50-7054** |
| | | *10 pack* | **50-7059** |

## STEALTH AIR CLEANER

| Back Plate gasket | | |
|---|---|---|
| Stock CV Carb & EFI Throttle Body,1991–up xl/bt *29062-95B* | | **106-6022** |
| Super E/G | *each* | **106-1724** |
| | *10 pack* | **106-2328** |
| Muscle Air Cleaner (includes lanyards) | | **170-0137** |
| Vent Seal Washers, Nitrile Rubber Coated, .520" x .880" x .024" | *each* | **50-7055** |
| | *10 pack* | **50-7057** |

## TUNED INDUCTION

| Back Plate gasket | | |
|---|---|---|
| Gasket, Backplate - E/G/SBEFI | *each* | **106-1724** |
| | *10 pack* | **106-2328** |
| Gasket, S&S SBEFI 58mm | | **106-4662** |
| Gasket, Stock Carb/Throttle Body *29062-95B* | | **106-6022** |
| Adaptor Plate Gasket | | **17-1022** |
| Adaptor Plate Bracket O-ring | *each* | **50-0446** |

## SINGLE BORE EFI THROTTLE BODY

| Back Plate gasket | | |
|---|---|---|
| 52mm | *each* | **106-1724** |
| | *10 pack* | **106-2328** |
| 58mm | *each* | **106-4662** |
| O-ring, Throttle Body to Manifold | | **50-7967-S** |
| Air Temp Sensor Gasket | | **16-5009-S** |
| IAC O-ring | | **50-8149-S** |
| Fuel Injector O-ring, Top | | **50-8264-S** |
| Fuel Injector O-ring, Bottom | | **50-8265-S** |
| Fuel Rail Inlet O-ring *27237-95* | *each* | **50-8137-S** |

## TRANSMISSION GASKETS

| | |
|---|---|
| O-ring, (-114), .625" ID x .812" OD, Vitron *11270* | **50-8033** |
| O-ring, Quad Seal, (-031), 1.734" X 1.875", Nitrile *11165* | **50-8045** |
| Seal, Transmission Output Shaft, 2.255" x 3.388"x .250*12067B* | **56-3033** |

## PRIMARY GASKETS

| | |
|---|---|
| Gasket, Primary Cover, 1990–'99 Softail® and Dyna® | **56-4049** |


170-0137

*All reference to HD® Part #s is for identification purposes only. We in no way are implying that any of S&S® Cycle's products are original equipment parts or that they are equivalent to the corresponding HD Part # shown.*

# GEARCOVER KIT REPLACEMENT PARTS

**1.** Gearcover assembly ..... **N/A**
**2.** Gasket, gearcover
*25225-93A, 25225-93B, 25225-70C, 25257-80*
*each* ..... **31-2107**
*10 pack* ..... **106-0232**
**3.** Outer cover for cast gearcovers - 1984-'99 BT
a. Flanged type - steel, chrome ..... **N/A**
b. Flanged type - steel, black ..... **N/A**
c. Flanged type - billet ..... **N/A**
d. Flangeless type - chrome ..... **31-0238**±
e. Flangeless type - black ..... **N/A**
**4.** Gasket, outer cover - 1984-'99 BT
Flanged type *(each)* ..... **31-0218**
*5 pack* ..... **31-0256**
Flangeless type *(each)* ..... **31-0237**
*5 pack* ..... **31-0261**
**5.** Ignition cover, inner - 1984-'99 BT
Flangeless type ..... **31-0235**
**6.** Gasket, ignition cover - 1984-'99 BT *32591-80, 32591-70*
*each* ..... **31-0225**
**7.** Ignition cover, outer - 1984-'99 BT
Die-cast *(HD® #32524-83)* ..... **N/A**
Billet, Chrome with S&S Logo
..... **31-0332**±1,2,3
Billet, Gloss Black with S&S Logo ..... **310-0897**
**8.** Screw, RSH - 8-32 x ½" (replaces stock rivets)
Stainless Steel *(each)* ..... **50-0048**
Chrome *(each)* ..... **50-0266-S**±
**9.** Screw, SH
10-24 x ¼" for steel cover *(each)* ..... **N/A**
10-24 x ⅜" - chrome for billet cover *4091 (each)* ..... **50-0023**±
**10.** Washer, flat .192" x 5⁄16" x .035"
*each* ..... **50-7009**
**11.** Screw, SH ¼"-20 x 1¼" – *4740A, 3482A*
Zinc *(each)* ..... **50-0008**
Chrome *(each) 4740A* ..... **50-0257-S**±
**12.** Washer, flat
¼" x .474" x .050" *(each)* ..... **50-7020**
¼" Flat washer, chrome, billet covers
*each* ..... **50-7017**±
*12 pack* ..... **50-7013**±
**13.** Wire harness clip *38711-93* ..... **31-2029**
**14.** Cam bushing, gearcover
1984-'99 BT *25581-70* ..... **31-4019**
**15.** Pinion shaft bushing, gearcover
1984-'99 BT *25582-93, 25582-73* ..... **31-4031**
**16.** Gearcover oil seal 1984-'99 BT
*(each)* ..... **31-4022**
**17.** Screw, timing mechanism *32606-82*
*each* ..... **31-0224**
*2 pack* ..... **31-0224P**
**18.** Screw, standard panhead 8-32 x ⅜"
*each* ..... **50-0004**
**19.** Clip, outer cover *(each)* ..... **31-0233**

**N/A = No longer available**

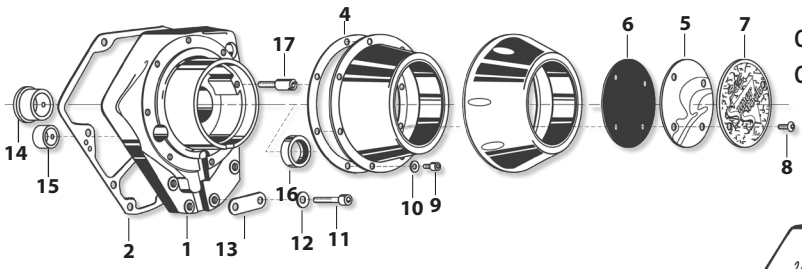


**CAST ALTERNATOR STYLE FLANGED CHROME OR BILLET OUTER COVER**

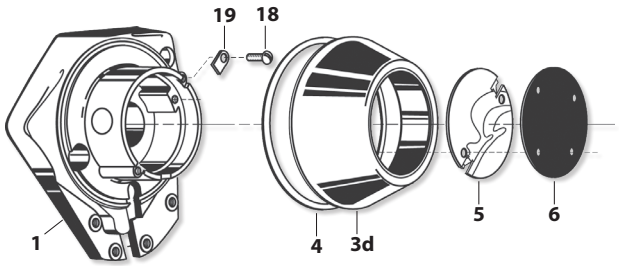


**CAST ALTERNATOR STYLE FLANGELESS**

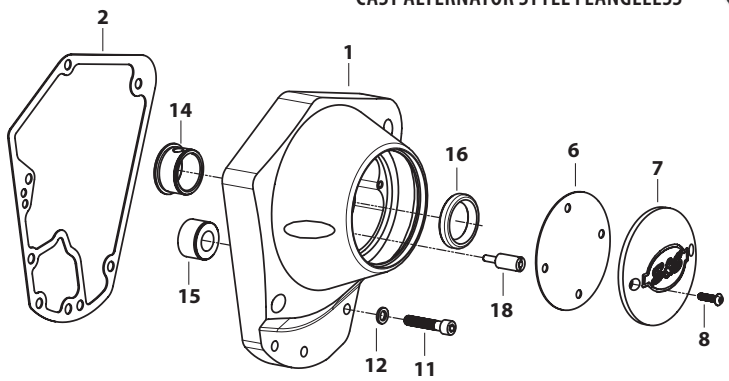


**BILLET ALUMINUM ALTERNATOR STYLES**

*All reference to HD® Part #s is for identification purposes only. We in no way are implying that any of S&S® Cycle's products are original equipment parts or that they are equivalent to the corresponding HD Part # shown.*

± WARNING: Cancer and Reproductive Harm – www.P65Warnings.ca.gov

# VALVE SPRING REPLACEMENT PARTS

### .650" Lift Sidewinder® Valve Springs
**(Stock, Super Stock® and Performance Replacement Cylinder Heads)**

**1.** Spring, Valve .650" ..... **106-5689**
**2.** Collar, Top, Steel. ..... **106-5690**
**3.** Collar, Bottom, Steel *(each)* ..... **106-5691**
**4.** Valve Seal
.420" Cast *(each)* ..... **900-0338**
.562" Powder Metal *(4 pack)* ..... **900-0737**
**5.** Valve Keeper *18229-83 (each)* ..... **90-2094-S**
*8 pack* ..... **50-7166**
**6.** Valve Spring Shim
.015" *(each)* ..... **500-0013**
.030" *(each)* ..... **500-0014**

### .585" Lift Street Performance Valve Springs
**(Stock, Super Stock® and Performance Replacement Cylinder Heads)**

**1.** Spring. ..... **900-0444**
**2.** Collar, top, steel *(each)*. ..... **N/A**
**3.** Collar, bottom, steel ..... **N/A**
**4.** Valve Seal
.420" Cast *(each)*. ..... **900-0338**
.562" Powder Metal *(4 pack)* ..... **900-0737**
**5.** Valve Keeper *18229-83 (each)*. ..... **90-2094-S**
*8 pack* ..... **50-7166**
**6.** Valve spring shim
.015" *(each)* ..... **90-2086**
*5 pack*. ..... **50-7161**
.030" *(each)* ..... **90-2087**
*5 pack*. ..... **90-2198**

**.650" Lift Sidewinder® Valve Springs**

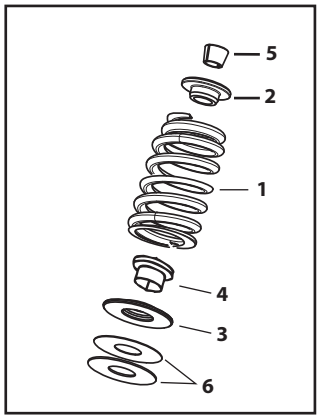


**.585" Lift Street Performance Valve Springs**

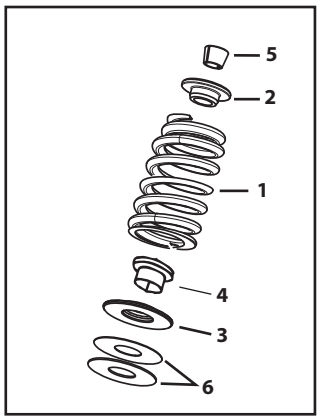


*All reference to HD® Part #s is for identification purposes only. We in no way are implying that any of S&S® Cycle's products are original equipment parts or that they are equivalent to the corresponding HD Part # shown.*

# 2 CAM V-SERIES CRANKCASE REPLACEMENT PARTS
## FOR 1984–'99 BIG TWIN ENGINES

**1.** Screw, SHCS, 10-24 x 1", Alloy Steel *2720* . . . . . **50-0044**
**2.** Seal, Left, Main Bearing, 1.750" x 2.507" x .3130", 1970-up bt *12026B* . . . . . **31-4010**
**3.** Bearing, Assembly, Left, Main *9028* . . . . . **31-4013**
**4.** Insert, Left, Main Bearing. . . . . **N/A**
**5.** Screw, HHC, Gr8, 5⁄16-18 x 3½", Zinc, Steel *3427* . . . . . **50-0117**
**6.** Washer, Flat, .344" x .688" x .065", Zinc, Steel *6320, 70907-07, 6016, 6702* . . . . . **50-7034**
**7.** O-ring, (-013), .437" ID x .565" OD, Viton® *11105, 11273* . . . . **50-8008**
**8.** Plug, Drain, w/O-ring, Magnetic, ½-20, Zinc, Steel . . . . . **50-8335**
**9.** Plug, Pipe, ¾ Taper, ¼-18 NPTF x .460", Zinc, Steel *765* . . . . . **50-8330**
**10.** Plate, Baffle, Crankcase, 1999-up bt. . . . . **31-0119-S**
**11.** Screw, PH, 10-24 x ⅜", Zinc, Steel, ASTM-A307 . . . . . **50-0050**
**12.** Fitting, Vent, ⅜", Plated, 1999-2006 bt . . . . . **50-0454**
**13.** O-ring, (-013), .437" ID x .565" OD, Viton® *11105, 11273* . . . . . **50-8008**
**14.** Fitting, Pipe, 90º, Male/Female, ⅛-27 NPTF x .500", Zinc Plated, Steel *26338-68, 26561-84A, 26561-81A, 26338-68A* . . . . . **106-2682**
**15.** Fitting, Hose, Straight, ⅛-27 NPTF x .500", Zinc, Steel . . . . . **50-8115**
**16.** Washer, Flat, .260" x .425" x .060", Chrome, Steel. . . . . **50-7017±**
**17.** Screw, SHCS, ¼-20 x 1", Zinc, ASTM A574-92A *852* . . . . . **50-0084**
**18.** Retaining Ring, Internal, 2.731" x .031" x .158", Steel, SAE 1070-1090 *35114-02* . . . . . **50-8160-S**
**19.** Bearing, Right, Main, S&S Crankcases 1999-'06 bt, 2000-up Bal bt, 2003-up NB bt *24604-00D* . . . . . **31-4085**
**20.** Valve, Assembly, Breather Reed, 2003-2010 bt . . . . . **310-0742**
**21.** Wave Spring, 2"OD X 1.6"ID X .375" . . . . . **50-8404**
**22.** Screw, SHCS, ¼-20 x 1¼", Zinc *4740A, 3482A* . . . . . **50-0008**
**23.** Washer, Flat, .260" x .425" x .060", Chrome, Steel . . . . . **50-7017±**
**24.** Pin, Dowel, .275" x .397", Steel *(4 pack)*. . . . . **500-0219**
**25.** Nut, HH, ¼-28 UNC-2B x .226", Zinc, Steel *7683* . . . . . **50-5011**
**26.** Washer, .261" x .474" x .050", Annealed, Stainless Steel. . . **50-7020**
**27.** O-ring, (-110), .375" ID x .562" OD, Viton® *11301* *each* . . . . . **50-8066-S**
**28.** O-ring, (-015), .562" ID x .068" OD, Black, Viton® *26432-76A* *each* . . . . . **50-8034-S** *2 pack* . . . . . **50-8034**
**29.** Pin, Dowel, .557" x .500", Black, Steel *16574-99A, 16573-83, 16573-83A* . . . . . **50-8023**
**30.** Screw, Torx Panhead, 8-32 x ⅜", Zinc, Steel *68042-99* . . . . . **50-0054-S**
**31.** Jet, Kit, Piston Cooling, 4⅛" 1984-'99 bt, 1999-up bt, *(2 pack)* *22307-99* . . . . . **31-2026**
**32.** Pin, Dowel, .437" x .610", Steel *16595-99A* . . . . . **50-8177**
**33.** Stud, Cylinder Base, ⅜-16 UNC x 6.070", Black, Steel . . . . . **31-2325-S**
**34.** Screw, HHC, Gr8, ¼-28 x 5½", Zinc, Steel . . . . . **50-0090**

*All reference to HD® Part #s is for identification purposes only. We in no way are implying that any of S&S® Cycle's products are original equipment parts or that they are equivalent to the corresponding HD Part # shown.*

± ⚠ WARNING: Cancer and Reproductive Harm – www.P65Warnings.ca.gov

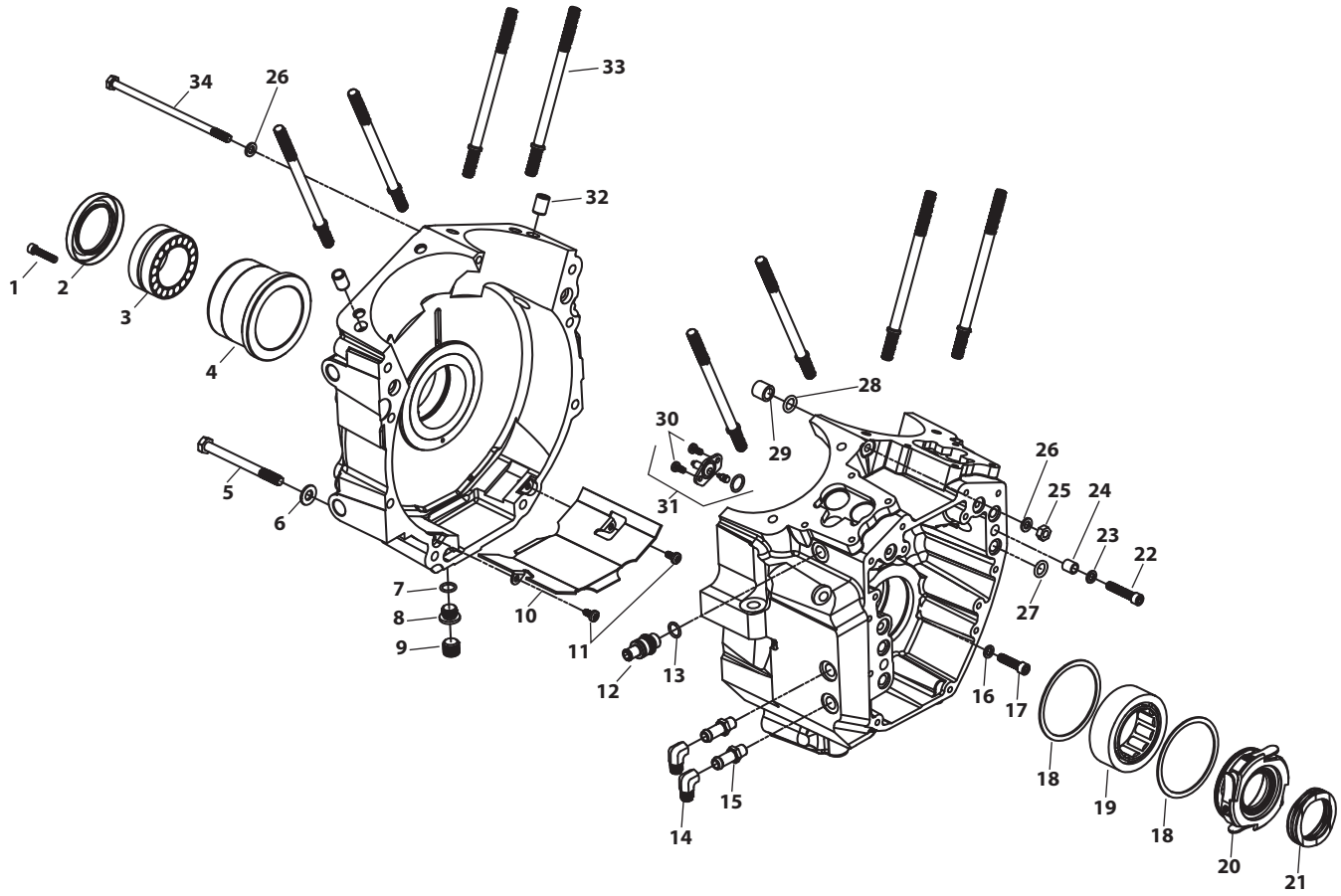
1
2
3
4
5
6
7
8
9
10
11
12
13
14
15
16
17
18
19
18
20
21
22
23
24
25
26
27
28
29
30
31
32
33
34
26

# SUPER STOCK® CRANKCASE REPLACEMENT PARTS
## FOR BIG TWIN ENGINES OF LESS THAN 4" CYLINDER BORE

**1.** Crankcase assembly, half ..... **N/A**

**2.** Race, right main bearing, All S&S BT
Standard (*24599-93, 24599-58A, 24599-58B*) ..... **31-4004**
+.030" O.S. ..... **31-4030**

**3.** Right main bearing assembly BT
White *24626-87A* ..... **31-4005**
Green *24628-87A* ..... **31-4016**
Red *24641-87A* ..... **31-4017**
Blue *24643-87A* ..... **31-4018**

**4.** Retaining ring, main bearing BT
*11177A (each)* ..... **50-8057**
*5 pack* ..... **50-1004**

**5.** Cam needle bearing assembly BT
*9058* ..... **31-4009**

**6.** Washer, cam lock – BT
*25550-57A) (each)* ..... **33-5201**
*5 pack* ..... **33-5213**

**7.** Cam thrust washer – BT
.050" *25550-36 (each)* ..... **33-5200**
.055" *25551-36 (each)* ..... **33-5202**
.060" *25552-36 (each)* ..... **33-5203**
.065" *25553-36 (each)* ..... **33-5204**
.070" *25554-36 (each)* ..... **33-5205**
.075" *(each)* ..... **33-5206**
.080" *(each)* ..... **33-5207**
.090" *(each)* ..... **33-5209**

**8.** Left Timken® main bearing assembly 1984-'99 S&S BT cases *9028* ..... **31-4013**

**9.** Timken Main Bearing Spacers, 1984-'99 BT
.0995" - .1005" *9124* ..... **31-4071**
.1015" - .1025" *9125* ..... **31-4072**
.1035" - .1045" *9126*) ..... **31-4073**
.1055" - .1065" *9127* ..... **31-4074**
.1075" - .1085" *9128* ..... **31-4075**
.1195" - .1205" *9134* ..... **31-4076**

**10.** Spacer, drive sprocket, 1984-'99 S&S BT cases
Standard *24002-70* ..... **31-4011**

**11.** Seal, sprocket shaft oil 1936-'99 S&S BT cases
*12026B (each)* ..... **31-4010**
*5 pack* ..... **31-4110**

**12.** Bushing, oil pump shaft - *24641-36* ..... **31-4008**

**13.** Tappet guide – Shown for reverence only (not included)

**14.** Screw, 12 pt. DHH ¼" -20 x ⅞" *3770*
*Each* ..... **50-0068**
*5-pack* ..... **50-0068P**

**15.** Gasket, tappet guide – 1948-'99 BT
Front *18634-48C* each) ..... **33-5302F**
*10 pack front* ..... **33-5313F**
Rear *18633-48B, 18633-48D* (each) ..... **33-5302R**
*10 pack rear* ..... **33-5313R**
*Set (each front & rear)* ..... **33-5302**
*10 pack set* ..... **33-5313**

**16.** Crankcase oil screen - 1948-'99 BT *24981-70, 24981-66*
*(each)* ..... **31-2010**
*5 pack* ..... **31-7008**

**17.** Crankcase oil screen spring - 1948-'99 BT
*24982-66, 24982-70 (each)* ..... **31-2011-S**

**18.** O-ring, drain plug and cover screw
*11105, 11273 (each)* ..... **50-8008**
*10 pack* ..... **50-8078**

**19.** Cover screw - 1948-'99 S&S BT *26263-80, 26362-36*
*each* ..... **31-6021**
*5 pack* ..... **31-7005**

**20.** Cylinder stud
1984-up BT *16837-85C (each)* ..... **31-2321-S**
*8 pack* ..... **31-2321**

**21.** Crankcase hardware Kits *(N/S - include studs, screws, nut & washers)*
Zinc Plated ..... **106-4908**
Chrome ..... **106-4909±**

**22.** Crankcase studs and screws
(Position 1, 2, 3, & 4) Alignment Stud,
⅝" -24 x 5¾" *24806-36, 3506* ..... **31-2003**
(Position 5 & 6) Screw, HHCS, ⅝" -18 x 3½" ..... **50-0117**
(Position 7) Screw HHCS, ⅝" -24 x 5"
Zinc *3430* ..... **50-0119**
Chrome (each) ..... **50-0253-S±**
(Position 8) Screw HHCS, ¼" -28 x 5½" *(each)*
Zinc ..... **50-0090**
Chrome *(each)* ..... **50-0252-S±**

**23.** Nut, Hex - ¼" -28 *7683* ..... **50-5011**

**24.** Washer, flat - ¼" x ⅝" x 1⁄16" (each)
Zinc *(6194, 6245, 6703, 6736, 6228W, 6192* ..... **50-7021**
Chrome ..... **50-7104-S±**

**25.** Nut, hex - ⅝" -24 *(each)*
Zinc *7833, 7883* ..... **50-5023**

**26.** Washer, flat - ⅝" x 1 1⁄16" x 1⁄16"
*6320, 70907-07, 6016, 6702* ..... **50-7034**

**27.** Plug, timing hole *720* ..... **31-2005**

**28.** Fitting, 45° ⅛" x ⅛" pipe male/female ..... **50-8112**

**29.** Oil pressure switch *26561-84*
(Includes: switch, nut, lock washer.) ..... **31-2016**

**30** Plug, SH pipe - ⅛" -27 *(each)* ..... **50-8331A**
*10 pack* ..... **50-1015**

**31.** Fitting, hose - ⅛" -27 pipe male ..... **50-8115**

**32.** Fitting, 45° hose – ¼" pipe male x ⅜" male hose ..... **50-8113**

**33.** Plug, SH pipe, ¼" -18, 1965-'69 S&S BT *765*
*each* ..... **50-8330**

**34** Dowel pin, .250" diameter x ½" *358, 366*
*(each)* ..... **50-8022**
*2 pack* ..... **50-8022-2**
*5 pack* ..... **50-8105**

**35.** Screw, SHC - 10-24 x 1" *(Stator) (N/S) 2720*
*each* ..... **50-0044**

**36.** Screw, SHS - 10-24 x ⅝" - *(Stator plug clamp) (N/S)*
*each* ..... **50-0045**

**37.** Gearcover – Shown for reference only *(not included)*

**38.** Gearcover gasket 1970-up S&S BT
*25225-93A, 25225-93B, 25225-70C, 25257-80* ..... **31-2107**

**39.** crank position sensor hole plug kit ..... **106-2997**

**40.** Cover, crank position sensor hole ..... **31-2056-S**

**41.** Screw, Torx, 8-32 x ⅜" ..... **50-0054-S**

**42.** Crank posititon sensor hole plug ..... **106-1189**

**43.** O-ring *(each)* ..... **50-8270**
*5 pack* ..... **50-8275**

**(N/S) = Not Shown**

*All reference to HD® Part #s is for identification purposes only. We in no way are implying that any of S&S® Cycle's products are original equipment parts or that they are equivalent to the corresponding HD Part # shown.*

± ⚠ WARNING: Cancer and Reproductive Harm – www.P65Warnings.ca.gov

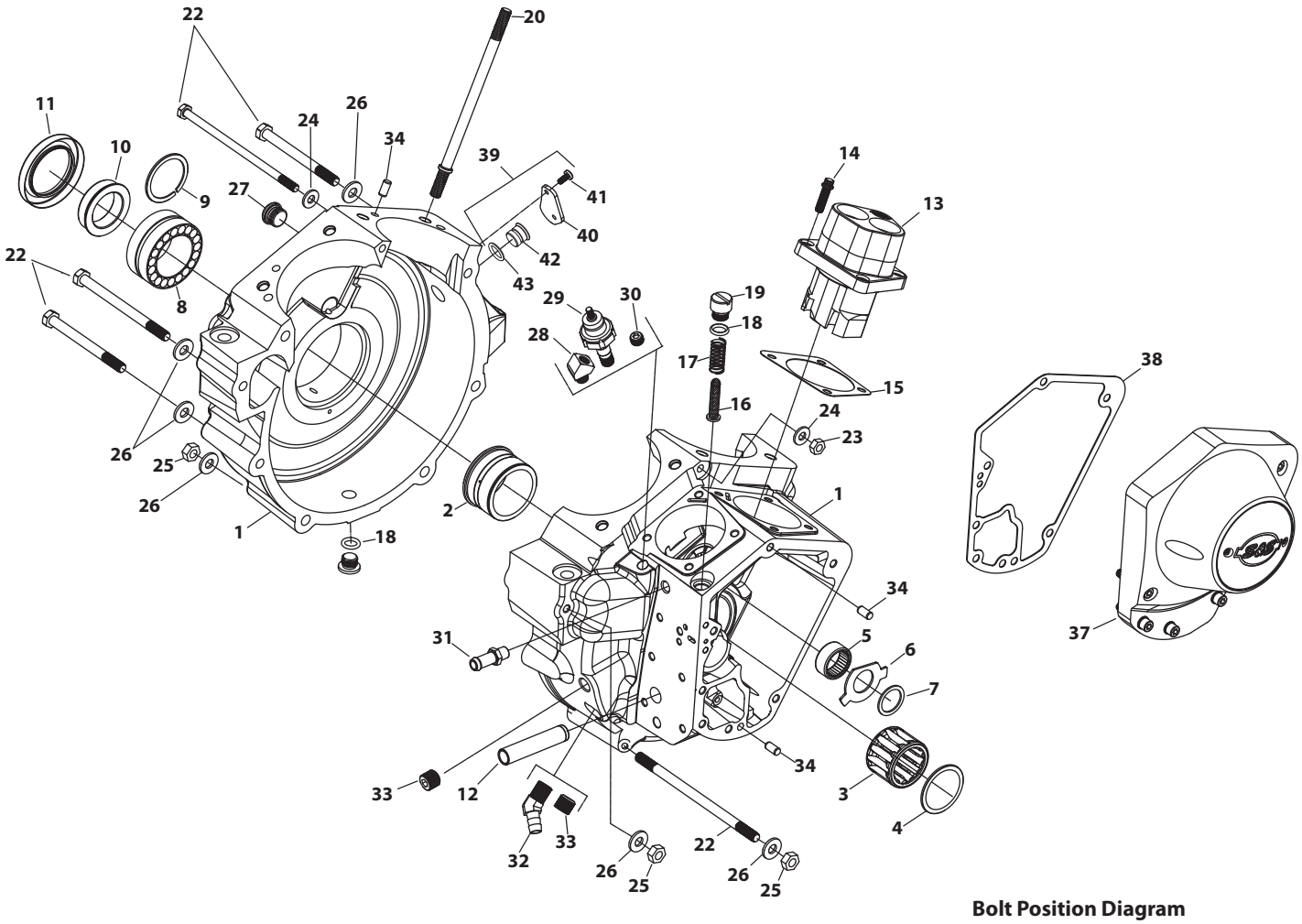


**Bolt Position Diagram**

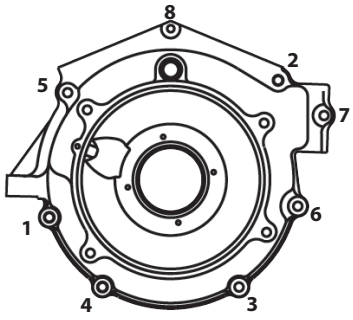




*All reference to HD® Part #s is for identification purposes only. We in no way are implying that any of S&S® Cycle's products are original equipment parts or that they are equivalent to the corresponding HD Part # shown.*

# SPECIAL APPLICATION CRANKCASE REPLACEMENT PARTS
## FOR BIG TWIN ENGINES WITH 4", 4⅛" AND 4⅜" CYLINDER BORE

**1.** Crankcase assembly, half ..... **N/A**
**2.** Race, right main bearing, for 1936-'99 big twin
Standard *#24599-93, 24599-58A, 24599-58B)* ..... USA 1,2,3 **31-4004**
**3.** Right main bearing assembly BT
White *24626-87A* ..... **31-4005**
Green *24628-87A* ..... **31-4016**
Red *24641-87A* ..... **31-4017**
Blue *24643-87A* ..... **31-4018**
**4.** Retaining ring, main bearing BT *11177A*
*each* ..... **50-8057**
*5 pack* ..... **50-1004**
**5.** Cam needle bearing assembly BT*9058* ..... USA USA 1,2,3 **31-4009**
**6.** Washer, cam lock - 1984-'99 BT *(HD® #25550-57A)*
*each* ..... USA **33-5201**
*5 pack* ..... USA **33-5213**
**7.** Cam thrust washer - 1984-'99 BT
.050" *25550-36 (each)* ..... USA **33-5200**
.055" *25551-36(each)* ..... USA **33-5202**
.060" *25552-36 (each)* ..... USA **33-5203**
.065" *25553-36 (each)* ..... USA **33-5204**
.070" *25554-36 (each)* ..... USA **33-5205**
.075" *25555-36 (each)* ..... USA **33-5206**
.080" *25556-36 (each)* ..... USA **33-5207**
.090" *25558-36 (each)* ..... USA **33-5209**
**8.** Left Timken® main bearing assembly
1984-'99 S&S BT cases *9028* ..... USA **31-4013**
**9.** Spacer, drive sprocket
1984-'99 S&S BT cases*24002-70* ..... USA **31-4011**
**10.** Seal, sprocket shaft oil 1936-'99 S&S BT cases
*12026B (each)* ..... USA **31-4010**
*5 pack* ..... USA **31-4110**
**11.** Bushing, oil pump shaft - All S&S BT cases
Standard *24641-36* ..... USA 1,2,3 **31-4008**
**12.** Tappet guide assembly (See PAGE 47)
**13.** Screw, 12 pt. DHH ¼" -20 x ⅞" *3770* ..... **50-0068**
*4 pack* ..... **50-0068P**
**14.** Gasket, tappet guide – 1984-'99 BT
Front *18634-48C (each)* ..... USA **33-5302F**
*10 pack front* ..... USA **33-5313F**
Rear *18633-48B, 18633-48D (each)* ..... USA **33-5302R**
*10 pack rear* ..... USA **33-5313R**
Set *(each front & rear) 18633-48* ..... USA **33-5302**
*10 pack set* ..... USA **33-5313**
**15.** Crankcase oil screen - 1984-'99 BT
*24981-70, 24981-66 (each)* ..... **31-2010**
*5 pack* ..... **31-7008**
**16.** Crankcase oil screen spring - 1984-'99 big twin
*24982-66, 24982-70 (each)* ..... **31-2011-S**
**17.** Cover screw o-ring - 1984-up S&S BT *11105, 11273*
*each* ..... **50-8008**
*10 pack* ..... **50-8078**
**18.** Cover screw - 1984-'99 S&S BT *26263-80, 26362-36*
*each* ..... **31-6021**
*5 pack* ..... **31-7005**
**19.** Cylinder stud
1984-up BT with +.500" cases *16832-86C*
*each* ..... USA **31-2331-S**
*8 pack* ..... USA **31-2331**
**20.** Crankcase Hardware

Special Application Crankcases (For Engines With 4" Cylinder Bore or Greater)
4" and 4⅛" Bore Cases Manufactured Before 6-1-08
**(Positions 1 - 4)**
Alignment Stud, 5/16" -24 x 6 1/16" *24809-30* ..... **31-2034**
**(Positions 5 & 6)**
Screw, HHCS, 5/16" -18 x 3½" *3427* ..... **50-0117**
Screw, HHCS, 5/16" -18 x 3½" chrome *(each)* ..... **50-0254-S±**
**(Position 7)**
Screw HHCS, 5/16" -24 x 5"
Zinc *3430* ..... **50-0119**
Chrome *(each)* ..... **50-0253-S±**
**(Position 8)**
Screw HHCS, ¼" -28 x 5½" *(each)* ..... **50-0090**
Screw HHCS, ¼" -28 x 5½" Chrome *(each)* ..... **50-0252-S±**
**4" and 4⅛" Bore Cases Manufactured After 6-1-08**
**(Positions 1- 7)**
1936-'69 S&S BT cases & S&S BT SA cases
Screw, HHCS, 5/16" -18 x 3½" zinc *3427* ..... **50-0117**
Screw, HHCS, 5/16" -18 x 3½", chrome *(each)* ..... **50-0254-S±**
**(Position 8)**
Screw HHCS, ¼" -28 x 5½" zinc *(each)* ..... **50-0090**
Screw HHCS, ¼" -28 x 5½" Chrome *(each)* ..... **50-0252-S±**
**4⅜" Bore Cases Manufactured Before 6-1-08**
**(Positions 1 - 4)** Alignment Stud
Alignment Stud, 5/16" -24 x 6 1/16" *24809-30* ..... **31-2034**
**(Positions 5 & 6)**
Screw, HHCS, 5/16" -18 x 3½ *3427* ..... **50-0117**
**(Position 7)**
Screw HHCS, 5/16" -24 x 5"
Zinc *3430* ..... **50-0119**
Chrome *(each)* ..... **50-0253-S±**
**(Position 8)** All S&S BT cases Special Application
Screw,HHCS,¼"-28 x 6", zinc *(each)* ..... **50-0020**
**4⅜" Bore Cases Manufactured After 6-1-08**
**(Positions 1- 7)** 1936-'69 S&S BT cases & S&S BT SA cases
Screw, HHCS, 5/16" -18 x 3½", zinc *3427* ..... **50-0117**
Screw, HHCS, 5/16" -18 x 3½", chrome *(each)* ..... **50-0254-S±**
**(Position 8)** All S&S BT cases Special Application
Screw,HHCS,¼"-28 x 6", zinc *(each)* ..... **50-0020**
**21.** Nut, Hex - ¼"-28 *7683* ..... **50-5011**
**22.** Washer, .261" x .474" x .050"
Zinc *(each)* ..... **50-7020**
Chrome *(each)* ..... **50-7105-S±**
**23.** Nut, hex - 5/16"-24
Zinc *7833, 7883* ..... **50-5023**
(for Special Application Cases Manufactured Before 6-1-08)
**24.** Washer, flat - 5/16" x 11/16" x 1/16" *6320, 70907-07, 6016, 6702* ..... **50-7034**
**25.** Plug, timing hole *720* ..... USA 2,3 **31-2005**
**26.** Drain plug - Manufactured before 5-1-2000
⅜"-18 NPT ..... **31-2006**
Manufactured after 5-1-2000
½"-20 ..... **50-8335**
**27.** Fitting, ⅛" x ⅛" pipe male/female ..... **50-8112**
**28.** Oil pressure switch *26561-84*
*(Includes: 1 each switch, nut, lock washer.)* ..... USA 1,2,3 **31-2016**
**29.** Piston Oiler Jet Kit *22307-99 includes #30 (1), #31 (1), #32 (2)*
*2 pack* ..... **31-2026**
**30.** O-ring,(-014),.500" ID x .625" OD
*each* ..... **50-8270**
*10 pack* ..... **50-8130**
**31.** Jet, Assembly, Piston Cooling *22371-99, 22307-99 (each)* ..... **31-2025B**

CONTINUED ON NEXT PAGE

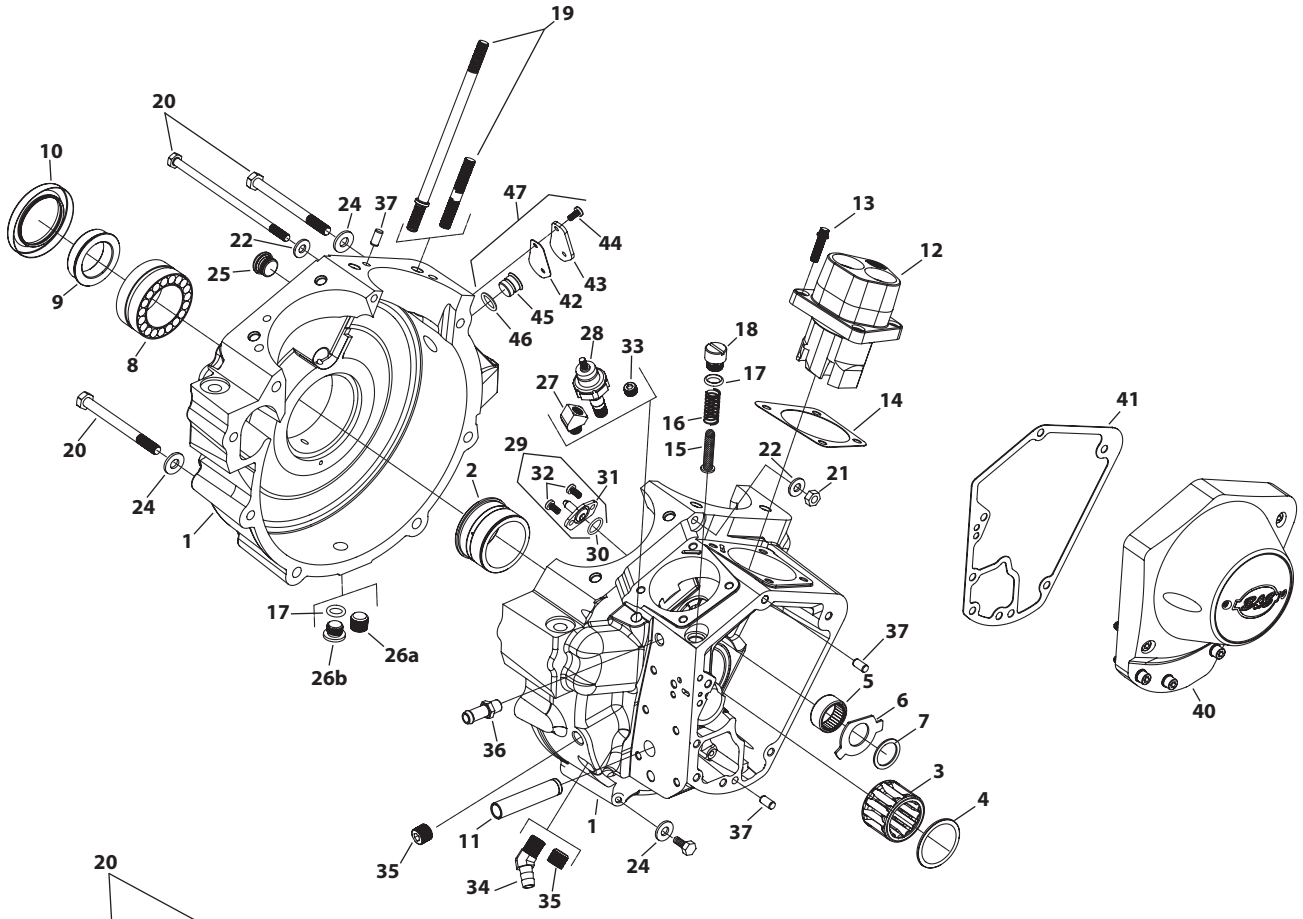





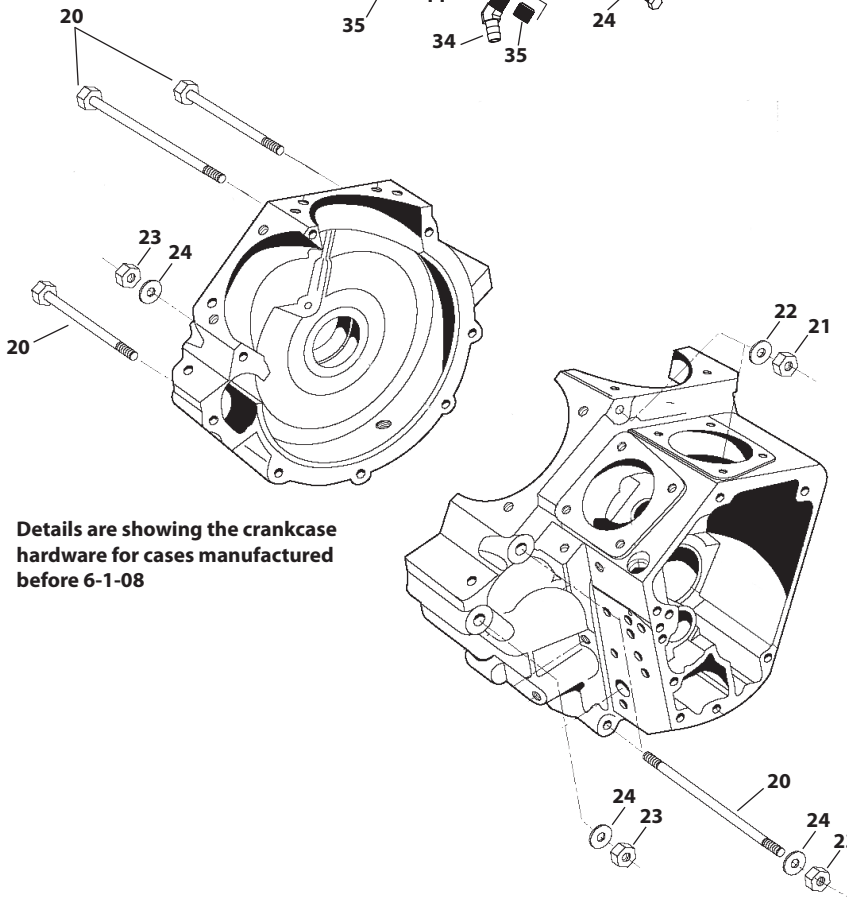


**Details are showing the crankcase hardware for cases manufactured before 6-1-08**

## BOLT POSITION DIAGRAM

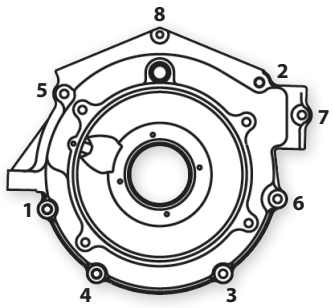


*All reference to HD® Part #s is for identification purposes only. We in no way are implying that any of S&S® Cycle's products are original equipment parts or that they are equivalent to the corresponding HD Part # shown.*

±⚠WARNING: Cancer and Reproductive Harm – www.P65Warnings.ca.gov

## CONTINUED
## SPECIAL APPLICATION CRANKCASE REPLACEMENT PARTS FOR BIG TWIN ENGINES WITH 4", 4⅛" AND 4⅜" CYLINDER BORE

**32.** Screw,Torx Panhead,8-32 x ⅜",Zinc,Steel *68042-99*
*each* ..... **50-0054-S**
**33.** Plug, SH pipe - ⅛"-27 *45830-48 (each)* ..... **50-8331A**
*10 pack* ..... **50-1015**
**34.** Fitting, 45° hose – ¼" pipe male x ⅜" male hose
..... USA 1,2 **50-8113**
**35** Plug, SH pipe, ¼"-18, 1965-'69 S&S BT *765*
..... USA 1,2,3 **50-8330**
**36.** Fitting, hose - ⅛"-27 pipe male ..... USA 1,2,3 **50-8115**
**37.** Dowel pin, .250" diameter x ½" **(1970-up S&S BT)** *358, 366*
*each* ..... **50-8022**
*2 pack* ..... **50-8022-2**
*5 pack* ..... **50-8105**
**38.** Screw, SHC - 10-24 x 1" (Stator) (N/S)*2720*
*each* ..... **50-0044**
**39.** Screw, SHS - 10-24 x 5⁄16" - (Stator plug clamp) (N/S)
*each* ..... **50-0045**
**40.** Gearcover (See PAGE 39)
**41.** Gearcover gasket 1970-up S&S BT
*25225-93A, 25225-93B, 25225-70C, 25257-80* ..... **31-2107**
**42.** Gasket, crank position sensor hole (obsolete) ..... **N/A**
**43.** Cover, crank position sensor hole ..... **31-2056-S**
**44.** Screw, Torx, 8-32 x ⅜" *68042-99 (each)* ..... **50-0054-S**
**45.** Crank position sensor hole plug ..... **106-1189**
**46.** O-ring *(each)* ..... **50-8270**
*5 pack* ..... **50-8275**
**47.** Crank position sensor hole plug kit ..... **106-2997**

**(N/S) = Not Shown**
**N/A = No longer available**

± ⚠ WARNING: Cancer and Reproductive Harm – www.P65Warnings.ca.gov

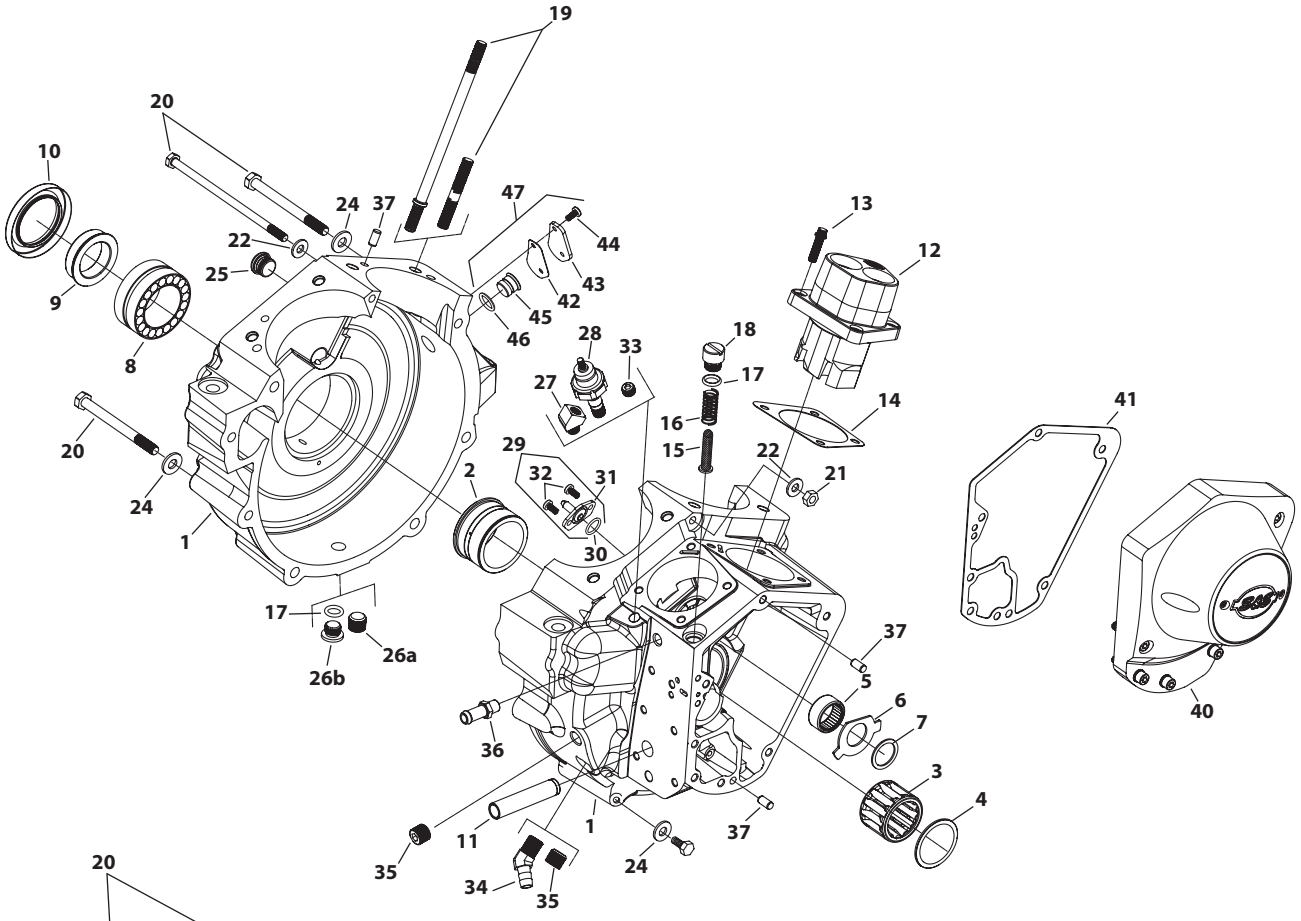


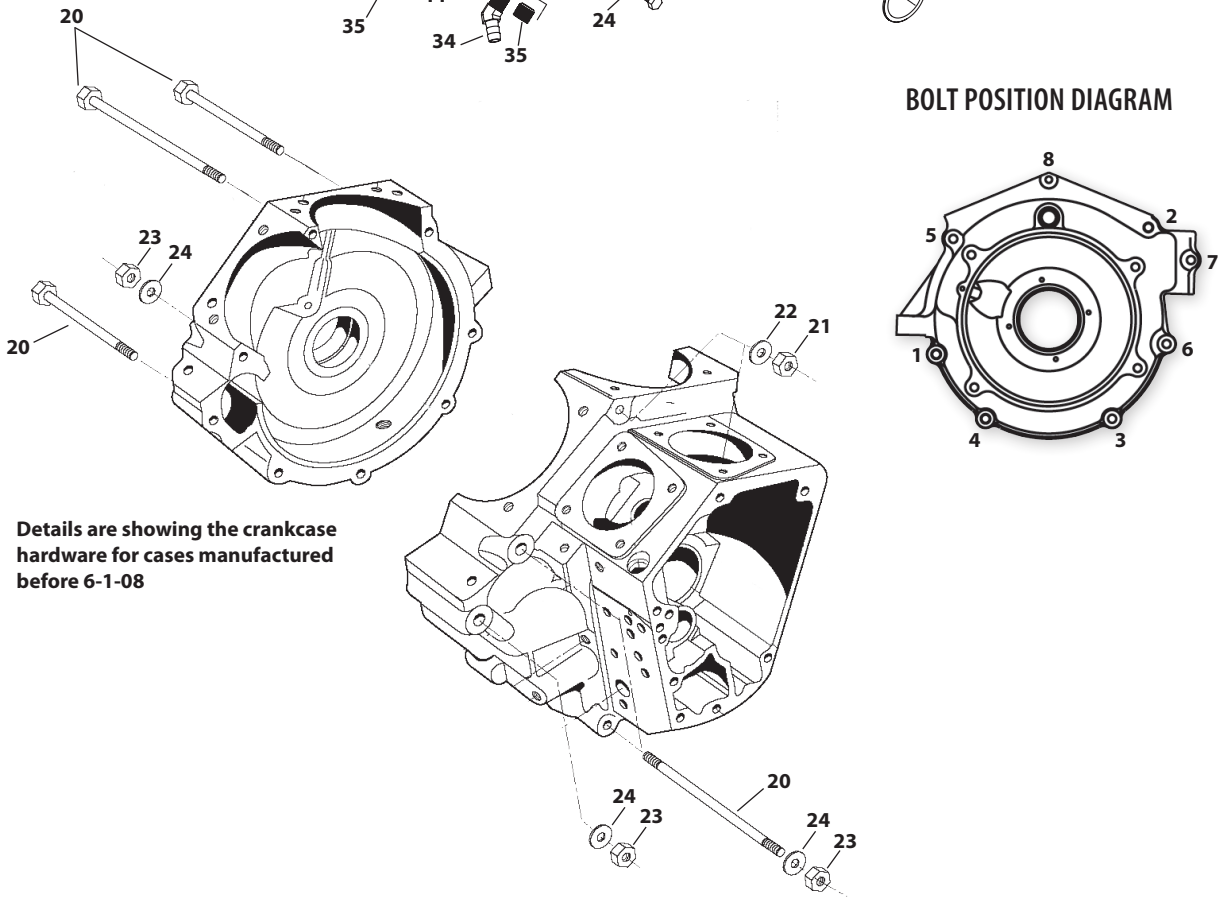


**Details are showing the crankcase hardware for cases manufactured before 6-1-08**

## BOLT POSITION DIAGRAM

# FLYWHEEL REPLACEMENT PARTS
## FOR V96, V107 AND V113

1. Sprocket Shaft, 1984-1999 w/S&S SE/SL flywheels *(includes #2 & 3)* ..... **33-2004**
2. Key *(each)* ..... **50-8225-S**
3. Sprocket Shaft Nut ..... **33-2033**
4. Sprocket Shaft, 1984-'99 w/S&S SGX/SF/SM flywheels *(includes #5)* ..... **320-0122**
5. Key *(each)* ..... **50-8227**
6. Pinion Shaft *(includes #7, 8, 9, 10, 11)*
   1984-1986 Stock Flywheels, L1981-99 S&S BL/SL/SM flywheels Stock or S&S® Super Stock® Cases
   Standard ..... **33-2027**
   1984-1999 S&S BL/SL/SM flywheels S&S SA cases +.250"
   Standard ..... **33-2040**
7. Key, pinion & oil pump *(each)* ..... **50-8221-S**
   *5 pack* ..... **50-1008**
8. Pinion Shaft Key *11218 (each)* ..... **50-8222-S**
   *5 pack* ..... **50-1009**
9. Bearing Retaining Ring *11177A (each)* ..... **50-8057**
   *5 pack* ..... **50-1004**
10. Pinion Shaft Nut ..... **33-2034**
11. Meter Plug
    .0625" hole ..... **50-8316±**
    .0925" hole ..... **50-8317±**
12. Pinion Shaft (+.250" longer) *(includes #7, 9, 13)*
    1984-1999 S&S SG flywheels/SA crankcases ..... **N/A**
13. Pinion Shaft Key ..... **50-8234**
14. Front Rod Bushing, 1941-1999 all S&S flywheels *24356-36A* ..... **34-4005**
15. Rear Rod Bushing *24345-36A (each)* ..... **34-4006**
16. Wristpin Bushing *24334-36* ..... **34-4007**
17. Race and Bushing Set *(includes #14, 15, 16)* ..... **34-4040**
18. Cage and Bearing Set (std.) *24346-87A, 24385-40B* ..... **34-4010**
19. Crankpin *(includes #20, 21)*, late 1981 -1999 all S&S flywheels
    Standard *23961-80A* ..... **34-2102**
    .001" OS *23974-87* ..... **34-2103**
    .002" OS *23975-87* ..... **34-2105**
    .003" OS ..... **34-2106**
20. Crankpin Key, late 1981-1999 all S&S flywheels *11218 each* ..... **50-8222-S**
    *5 pack* ..... **50-1009**
21. Crankpin Nut, late 1981-1999 all S&S flywheels *23967-54A, 23969-83, 23901-81, 23981-98* ..... **34-2104**
22. Connecting Rod Assembly, 1984-'99 all big twins *(includes #14, 15, 16, 18, 19, 20, 21)*
    Heavy Duty *24281-80, 24281-83* ..... **34-7013**

*All reference to HD® Part #s is for identification purposes only. We in no way are implying that any of S&S® Cycle's products are original equipment parts or that they are equivalent to the corresponding HD Part # shown.*

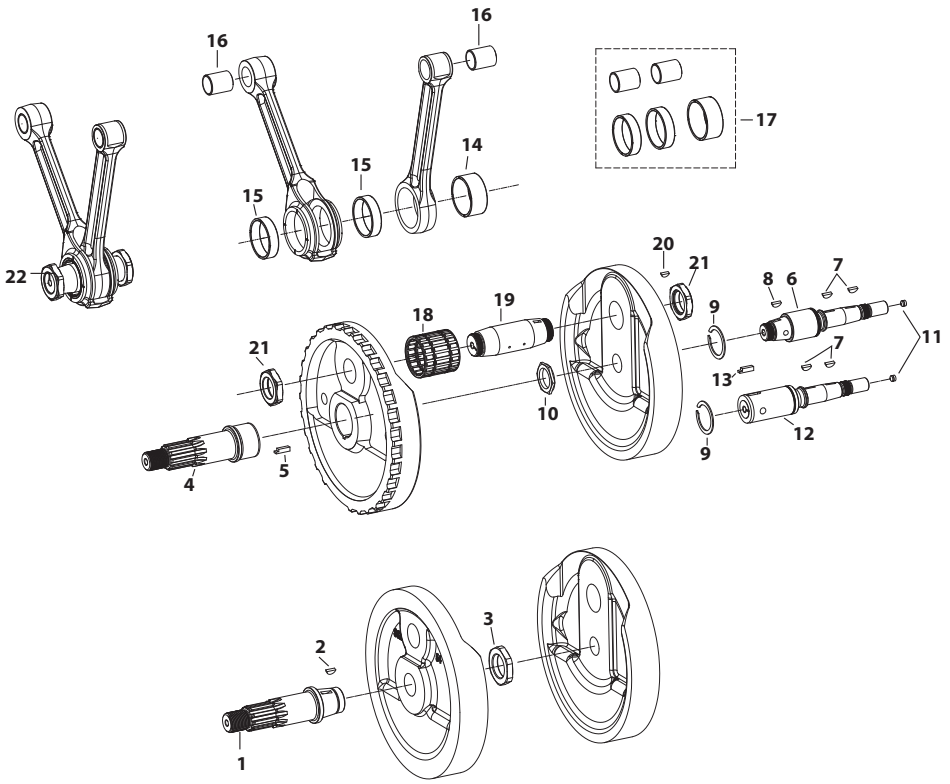


±⚠ WARNING: Cancer and Reproductive Harm – www.P65Warnings.ca.gov

***NOTES:*** S&S rods with their beefier than stock construction are slightly heavier than stock connecting rods. Therefore, rebalancing the flywheels is recommended when S&S rods are used in stock replacement applications. We realize that rebalancing is an inconvenience, but we did not want to sacrifice rod strength. In addition, given the variations in stock and aftermarket components available to engine builders, flywheel rebalancing is a desirable step in any major engine overhaul.

We recommend and sell only the pre-1990 big twin shaft. Since the S&S pinion shafts are of the earlier design, they will not accept the late style stock pinion gear, oil pump drive gear, gear spacer and pinion gear nut—to make it easier to install S&S flywheels.

1989-'99 big twin engines: S&S offers a conversion package consisting of earlier style pinion gear, spacer, nut, and oil pump drive gear to fit the S&S pinion shaft. S&S offers pinion and oil pump drive gears to fit the S&S pinion shaft for Harley-Davidson® Sportster® models.

Crankpins must be measured prior to final honing of bearing races to ensure proper clearance. (Inquire about S&S flywheel rebuild program if adequate measurement equipment is not available.) Dimensions shown are nominal.

# FLYWHEEL REPLACEMENT PARTS
## FOR V111, V117 AND V124

1. Sprocket Shaft, 1984-'99 bt *(includes key)* ..... **320-0122**
2. Pinion Shaft *(+.250" longer) (includes #7, 9, 13)*
   1984-1999 S&S SG flywheels/SA crankcases ..... **N/A**
3. Meter Plug
   .0625" hole ..... **50-8316**±
   .0925" hole ..... **50-8317**±
4. Key, pinion & oil pump *11218* ..... **50-8221-S**
   *5 pack* ..... **50-1008**
5. Bearing Retaining Ring *11177A* ..... **50-8057**
   *5 pack* ..... **50-1004**
6. Pinion Shaft Key ..... **50-8234**
7. Key ..... **50-8227**
8. Front Rod Race ..... **34-4008**
9. Rear Rod Race ..... **34-4013**
10. Crankpin (std.) ..... **106-6239**
11. Crankpin Plug *(each)* ..... **106-5256**
    *2 pack* ..... **50-8329-2**
12. Race/Bearing Set ..... **340-0028**
13. Wristpin Bushing,
    1984-'99 bt , straight bushing ..... **34-4012**
14. Connecting Rod Set
    1984-'99 bt, straight wristpin ends ..... **N/A**

***NOTES:*** Due to different crankpin diameters, S&S® connecting rod assemblies cannot be used with stock Harley-Davidson® flywheels.
S&S flywheels for S&S V111, V117 AND V124 engines are pressed together as opposed to using the traditional tapered shafts and crankpin.
Assembly and truing requires special equipment.

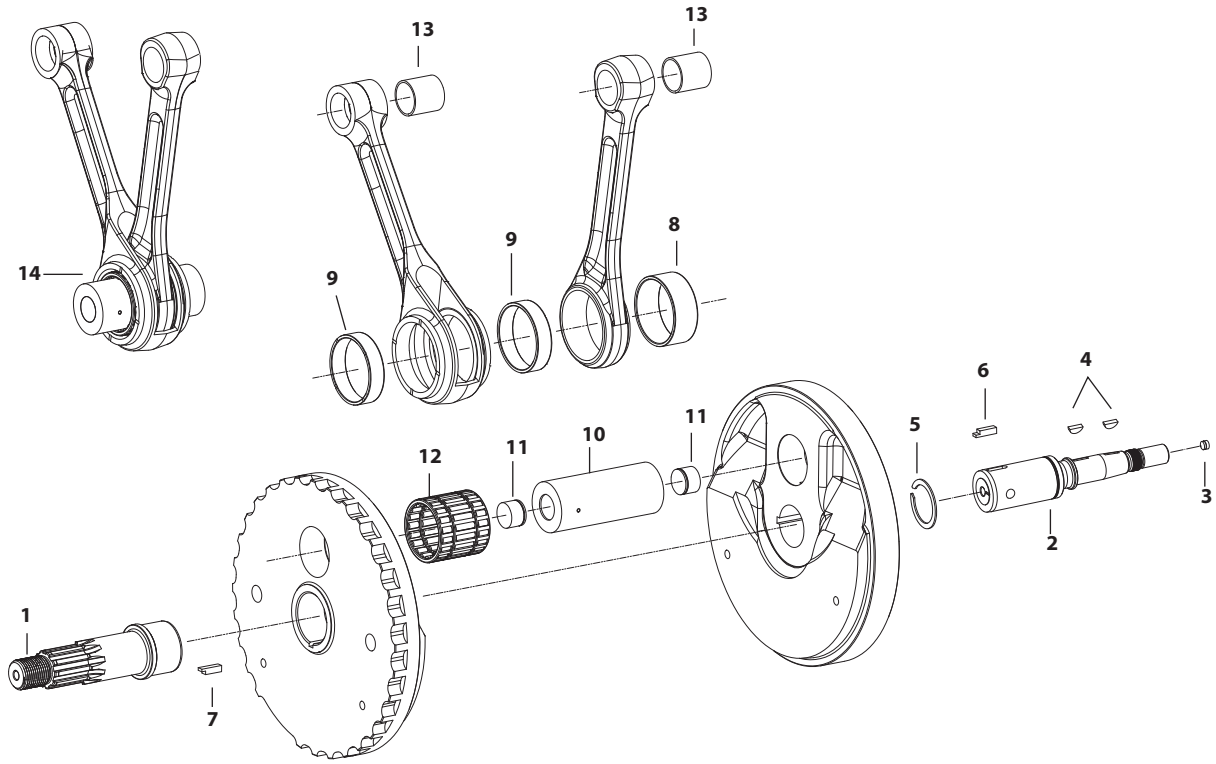


± ⚠ WARNING: Cancer and Reproductive Harm – www.P65Warnings.ca.gov

*All reference to HD® Part #s is for identification purposes only. We in no way are implying that any of S&S® Cycle's products are original equipment parts or that they are equivalent to the corresponding HD Part # shown.*

# STANDARD OIL PUMP KIT REPLACEMENT PARTS

**1.** Pump body assembly
Fits 1984-'91 *31-6042* ..... **31-6050**
Fits 1992-'99 *31-6043* ..... **31-6051**
**2.** Shaft, idler *26327-68* ..... USA **31-6004**
**3.** Seal, drive shaft *26227-58* ..... USA **31-6005**
**4.** Gear, return drive *26315-68A* ..... USA **31-6013**
**5.** Gear, return idler *26317-68A* ..... USA **31-6014**
**6.** Gear, supply drive *26328-74, 26320-36* ..... USA **31-6015**
**7.** Gear. supply idler *26326-62A* ..... USA **31-6016**
**8.** Shaft, drive *26346-70* ..... USA 1,2,3 **31-6011**
**9.** Key, drive shaft *26347-15 (each)* ..... **50-8220-S**
*10 pack* ..... **50-8229**
**10.** Plug, 1/8"-27 *45830-48 (each)* ..... **50-8331A**
*10 pack* ..... **50-1015**
**11.** Check ball valve *8866, 8873* ..... USA 1,2,3 **50-8091**
**12.** Spring, check valve *26363-36, 26363-56, 26262-80 (each)* ..... **31-6022**
*10 pack* ..... **31-6092**
**13.** Relief valve *26400-82, 26400-82B* ..... **31-6082**
**14.** Spring, relief valve *26207-83 (each)* ..... **31-6018**
*10 pack* ..... **31-6084**
**15.** Screw, check valve & relief valve cover *26263-80, 26362-36*
*each* ..... **31-6021**
*5 pack* ..... **31-7005**
**16.** O-ring *11105, 11273 (each)* ..... **50-8008**
*10 pack* ..... **50-8078**
**17.** Pump cover assembly
Pre-1992 *(Top or bottom fittings; accepts pressure gauge)*
*31-6041* ..... **31-6059**
1992-'99 *(Universal)* ..... **31-6061**
1992-'99 *(Bottom fittings or central supply fitting)* ..... **31-6062**
**18.** Fitting, front chain hose ..... **50-8116**
**19.** Plug, pipe 1/16"-27 x 1/4" pipe ..... USA **50-8332**
**20.** Elbow, supply/return
*26338-68A, 26561-81A, 26561-84A, 26338-68* ..... **106-2682**
*5 pack* ..... **50-1007**
**21.** Fitting, supply/return hose ..... USA 1,2,3 **50-8115**
**22.** Return fitting, compression *63523-92, 63523-62*
..... USA 1,2,3 **50-8120**
**23.** Seal, tubing, 3/8" x 1/2" O.D. x 1/4" ..... **50-8271**
**24.** Plug, 1/4"-20 *(each)* ..... **50-0069**
*2 pack* ..... **50-0069P**

**25.** Screws, mounting - 1984-'99
**a.** 1/4"-24 x 1-1/2" (HHCS) ..... **50-0082**
**b.** 1/4"-24 x 2-1/4" (HHCS) *5430W* ..... **50-0088**
**c.** 1/4" -20 x 1-1/2" (HHCS) ..... **50-0080**
**d.** 1/4" -20 x 2-1/4" (SHCS) *4717A* ..... **50-0078**
**e.** 1/4" -20 x 1-1/2" (SHCS) *4718A* ..... **50-0079**
**26.** Washer, 1/4" *(each)* ..... **50-7017**
*12 pack* ..... **50-7013**
**27.** Retaining ring *695-36, 26348-36 (each)* ..... **50-8058**
*10 Pack* ..... **50-8106**
**28.** Retaining ring, external *11002 (each)* ..... **50-8059**
*10 Pack* ..... **50-8107**
**29.** Gear, pump drive, 24T *26345-73* ..... **33-4230**
**30.** Gear, pinion shaft pump drive – 1984-'89
*26349-73, 26349-73A* ..... **33-4232**
**31.** Gear, steel breather valve
Standard *25310-82A, 25313-77B, 25311-90* ..... **33-4241**
+.030" ..... **33-4242**
**32.** Shim, steel breather kit - *8 pack (includes one of each thickness)* .. **33-4249**
**a.** +.100" thick ..... **33-4200**
**b.** +.110" thick *25320-79* ..... **33-4201**
**c.** +.120" thick *25322-79* ..... **33-4202**
**d.** +.130" thick *25325-79, 25320-82* ..... **33-4203**
**e.** +.140" thick *25322-82, 25327-79* ..... **33-4204**
**f.** +.150" thick *25325-82* ..... **33-4205**
**g.** +.160" thick *25327-82* ..... **33-4206**
**h.** +.170" thick ..... **33-4207**
**33.** Gasket rebuild kit **(N/S)** Includes key and retaining ring
**a.** 1984-'91 ..... **31-6271**
**b.** 1992-'99 ..... **31-6273**
**34.** Master rebuild kit - **(N/S)**
*Includes: gasket rebuild kit, seal, retaining ring, relief valve spring, check valve spring, . check valve, ball, and cover screw o-rings*
**a.** 1984-'91 ..... **31-6275**
**b.** 1992-'99 ..... **31-6278**
**35.** Drill jig, oil pump **(N/S)** ..... **53-0013**

**Oil pump mounting hardware kit (N/S)**
1984-91 *(Includes # 25a,25b,25c,25d,26)* ..... **31-6288**
1992-99 *(Includes # 25d,25e,26)* ..... **31-6290**

**Hardware Kit, Oilpump Cover (N/S)**
1984-91 *(Includes #10,18,19,20,21,22)* ..... **31-6283**±
1992-99 *(Inlcudes #10,20,21,22)* ..... **31-6286**±

**(N/S) = Not Shown**

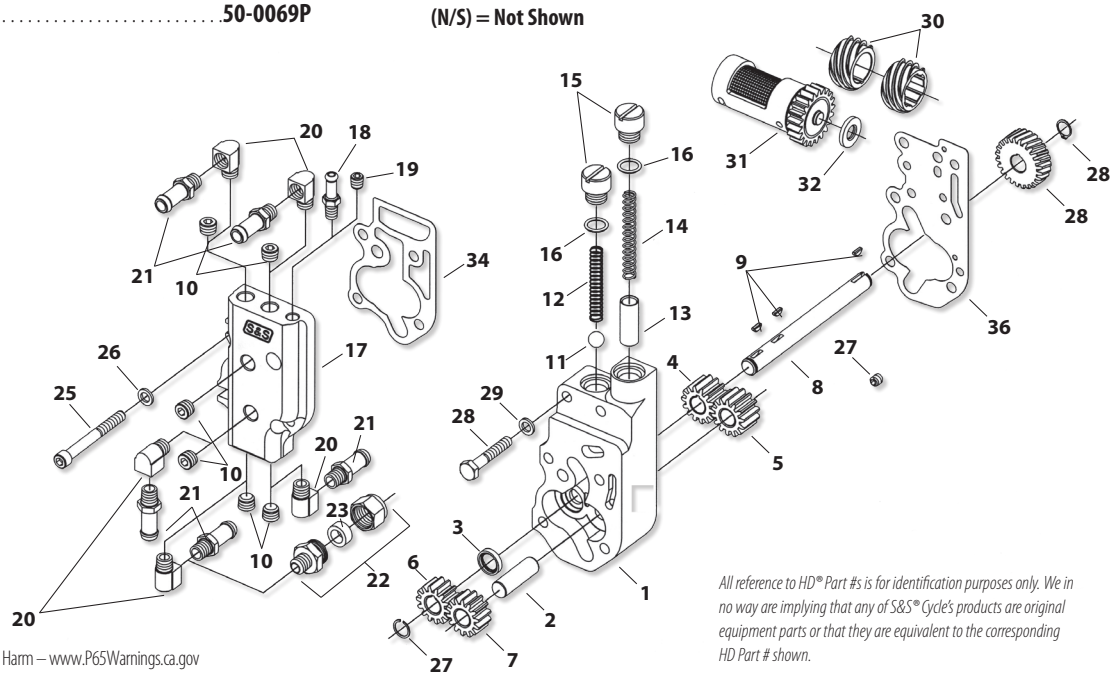


*All reference to HD® Part #s is for identification purposes only. We in no way are implying that any of S&S® Cycle's products are original equipment parts or that they are equivalent to the corresponding HD Part # shown.*

± WARNING: Cancer and Reproductive Harm – www.P65Warnings.ca.gov

# HIGH VOLUME HIGH PRESSURE OIL PUMP REPLACEMENT PARTS

**1.** Pump body assembly
Fits 1984-'91 ..... **31-6097**
Fits 1992-'99 ..... **31-6078**
**2.** Shaft, idler ..... **31-6080-S**
**3.** Seal, drive shaft *(each)* ..... **31-6064-S**
**4.** Gear, return drive, HVHP ..... **31-6075**
**5.** Gear, return idler, HVHP ..... **31-6083**
**6.** Gear, supply drive, HVHP ..... **31-6074**
**7.** Gear, supply idler, HVHP ..... **31-6081**
**8.** Shaft, drive *26346-70* ..... USA 1,2,3 **31-6011**
**9.** Key, drive shaft *(each)* ..... **50-8228-S**
**9a.** Key,Woodruff,.094" x .313" x .311",Steel *26347-15*
*each* ..... **50-8220-S**
*10 pack* ..... **50-8229**
**10.** Plug, ⅛"-27 *45830-48 (each)* ..... **50-8331A**
*10 pack* ..... **50-1015**
**11.** Check ball valve *(HD® #8866, 8873* ..... USA 1,2,3 **50-8091**
**12.** Spring, check valve *26363-36, 26363-56, 26262-80*
*each* ..... **31-6022**
*10 pack* ..... **31-6092**
**13.** Relief valve *26400-82, 26400-82B* ..... **31-6082**
**14.** Spring, relief valve *26207-83 (each)* ..... **31-6018**
*10 pack* ..... **31-6084**
**15.** Screw, check valve & relief valve cover *26263-80, 26362-36*
*each* ..... **31-6021**
*5 pack* ..... **31-7005**
**16.** O-ring *11105, 11273 (each)* ..... **50-8008**
*10 pack* ..... **50-8078**
**17.** Pump cover assembly
1984-'91 (Universal) ..... **31-6098**
1992-'99 (Universal) ..... **31-6079**
1992-'99 (Standard Style) ..... **31-6094**
**18.** Elbow, supply/return *26338-68A, 26561-81A, 26561-84A, 26338-68*
*each* ..... **106-2682**
*5 pack* ..... **50-1007**
**19.** Fitting, supply/return hose ..... USA 1,2,3 **50-8115**
**20.** Return fitting, compression *63523-92, 63523-62* ..... USA 1,2,3 **50-8120**
**21.** Seal, tubing ⅜" x ½" O.D. x ¼" ..... **50-8271**

**22.** Screws, mounting
**a.** 1/4"-20 x 1-1/2" (SHCS) *4718A* ..... **50-0079**
**b.** 1/4"-20 x 1-1/2" (HHCS) ..... **50-0080**
**c.** 1/4"-20 x 2-1/2" (SHCS) ..... **50-0086**
**23.** Washer, ¼" *(each)* ..... **50-7017**
*12 pack* ..... **50-7013**
**24.** Retaining ring *695-36, 26348-36 (each)* ..... **50-8058**
*10 Pack* ..... **50-8106**
**25.** Retaining ring, external *11002 (each)* ..... **50-8059**
*10 Pack* ..... **50-8107**
**26.** Gear, pump drive, 24T *26345-73* ..... **33-4230**
**27.** Gear, pinion shaft pump drive 1954-'89
*26349-73, 26349-73A* ..... **33-4232**
**28.** Gear, steel breather valve
Standard *25310-82A, 25313-77B, 25311-90* ..... **33-4241**
+.030" ..... **33-4242**
**29.** Shim, steel breather kit
8 pack *(Includes one of each thickness)* ..... **33-4249**
+.100" thick ..... **33-4200**
+.110" thick *25320-79* ..... **33-4201**
+.120" thick *25322-79* ..... **33-4202**
+.130" thick *25325-79, 25320-82* ..... **33-4203**
+.140" thick *25322-82, 25327-79* ..... **33-4204**
+.150" thick *25325-82* ..... **33-4205**
+.160" thick *25327-82* ..... **33-4206**
+.170" thick ..... **33-4207**
**30.** Gasket rebuild kit
Includes key and retaining ring (N/S)
1984-'91 BT HVHP *31-6306* ..... **31-6308**
1992-'99 BT HVHP ..... **31-6299**
**31.** Master rebuild kit (N/S)
*Includes gasket rebuild kit, seal, retaining ring,relief valve spring, check valve spring, check valve, ball, and cover screw o-rings.*
1984-'91 BT HVHP ..... **31-6309**
1992-'99 BT HVHP ..... **31-6300**

Hardware Kit, Oilpump Cover (N/S)
*(Includes # 10,18,19,20)* ..... **31-6285**±
Oilpump Mounting Hardware Kit (N/S)
*(Includes # 22a,22b,22c,23)* ..... **31-6301**

**(N/S) = Not Shown**

***NOTE:*** HVHP oil pump gaskets are not interchangeable with standard S&S or stock oil pump gaskets.

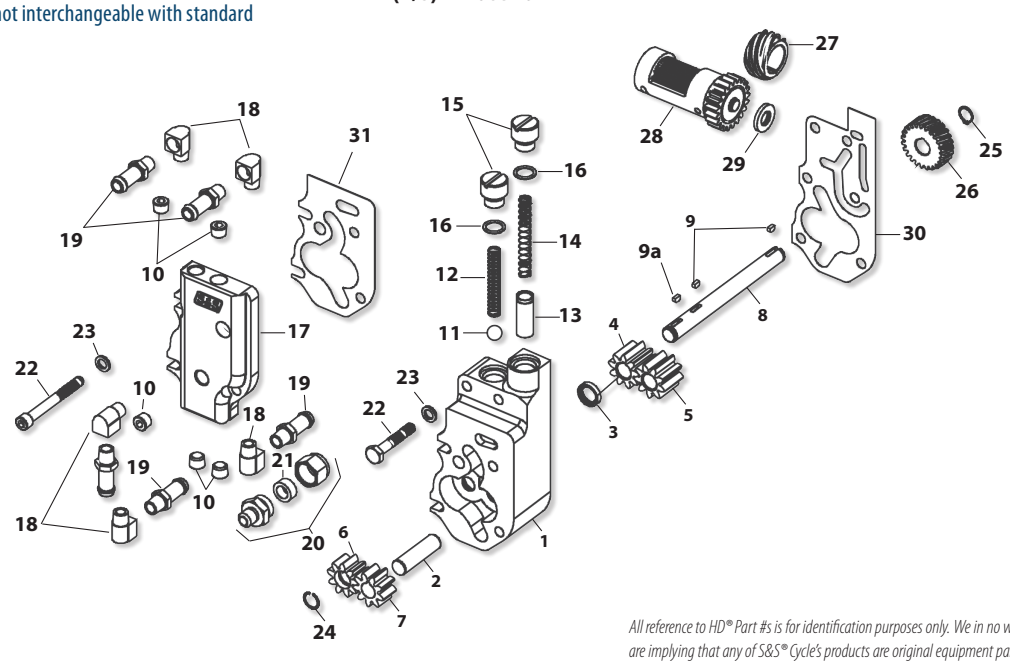


*All reference to HD® Part #s is for identification purposes only. We in no way are implying that any of S&S® Cycle's products are original equipment parts or that they are equivalent to the corresponding HD Part # shown.*

± WARNING: Cancer and Reproductive Harm – www.P65Warnings.ca.gov

# PERFORMANCE REPLACEMENT HEAD REPLACEMENT PARTS
## FOR 1984–'99 BIG TWIN ENGINES

**1.** Cylinder head (See cylinder heads on PAGE 52)
**2.** Valve
- Intake – 1.900" diameter. . . . **90-2139**
- Exhaust – 1.575" diameter . . . **90-2026**

**3.** Valve seats
- Intake – 1.900" diameter. . . . **90-2138**
- Exhaust – 1.605" diameter . . . **90-2003**

**4a.** Valve guide – Cast - intake or exhaust
- Standard Diameter *.5625/.5620 18112-92* USA USA 1,2,3 . . . **90-2210**
- +.001" *Diameter .5635/.5630 18130-83C* . . . USA **90-2211**
- +.002" *Diameter .5645/.5640 18133-83A, 18133-83D* . . . USA **90-2212**
- +.003" *Diameter .5655/.5650 18131-83C* . . . USA **90-2213**
- +.030" *Diameter .5925/.5920* . . . USA **90-2219**

**4b.** Valve Guide - Powder Metal - Intake/Exhaust
- Standard . . . **900-0553**
- +.001 . . . **900-0554**
- +.002 . . . **900-0555**
- +.003 . . . **900-0556**

**13.** Head mount bolt - ⅜"-16 x 1¼" *4716W each* . . . USA 1,2,3 **50-0168**
**14.** Flat washer - ⅜"
- Zinc *(each)* . . . USA 1,2,3 **50-7051**
- Chrome *(each)* . . . **50-7106-S**±

**15.** Head bolt assembly – Includes head bolt washer. (See PAGE 54)
**16.** Head bolt washer
- .150" *(each)* . . . **50-0418-S**
- .250" *(each)* . . . **50-7091**

**17.** Exhaust port stud *16715-83 (each)* . . . **50-0493**
*5 pack* . . . **50-1028**
**18.** Lock washer - 5⁄16" . . . **50-7032**
**19.** Nut, HH - 5⁄16" -24 *7833, 7883* . . . **50-5023**
**20.** Exhaust pipe gasket *65324-83B, 65324-83A (each)* . . . **106-5029**
*10 pack* . . . **93-1072**
**21.** Thread conversion insert , ½"-13 to 5⁄16"-18 . . . **50-8151**
**22.** Intake manifold (See PAGE 56)
**23.** Screw, manifold mounting
- SH 5⁄16"-18 x 1" *3201WA, 2708* . . . **50-0101**
- HH - 5⁄16"-18 x 1" *3987 (each)* . . . **50-0108**

**24.** Washer, flat - 5⁄16" *6320, 70907-07, 6016, 6702* . . . **50-7034**
**25.** Flange, manifold mounting
- Front *27009-86A (each)* . . . USA **16-0232**
- *5 pack* . . . USA **16-0600**
- Rear *27010-86A (each)* . . . USA **16-0233**
- *5 pack* . . . USA **16-0601**
- Set of Two. . . . **106-3516**

**26.** O-ring, manifold USA
- Stock manifolds *26995-86B, 26995-86A, 26992-99 (each)* . . . **16-0236**
- *10 pack* . . . **16-0244**
- S&S manifolds *(each)* . . . **16-0235**
- *10 pack* . . . **16-0243**

**27.** Head gasket, 1984-'99 big twin (No o-rings required)
- 3½" Bore
  - .045" thick *16770-84D, 16770-84F (each)* . . . **93-1011-S**
  - *10 pack* . . . **93-1024**
  - .0625" thick *16770-84D, 16770-84F, 10773-85(each)* . . . **93-1313-S**
  - *10 pack* . . . **93-1051**
- 3⅝" Bore
  - .045" thick *(each)* . . . **93-1037-S**
  - *10 pack* . . . **93-1052**
  - .062" thick *(each)* . . . **93-1016-S**
  - *10 pack* . . . **93-1053**

**28.** Alignment dowel *16574-99A, 16573-83, 16573-83A (each)* . . . **50-8023**
*10 pack* . . . **50-8109**
**29.** Temp Sensor Hole Plug Screw, SHCS, ⅜"-16 x 1" *(each)* . . . **50-0161**

### TOP END REBUILD GASKET KITS FOR S&S® ENGINES FOR BIG TWINS

| Engine Family | Year Group | Bore Size | Part # |
|---|---|---|---|
| V-Series | 1984–'99 | 3⅝" | **90-9502** USA 1 |
| V-Series | 1984–'99 | 3½" | **90-9507** |

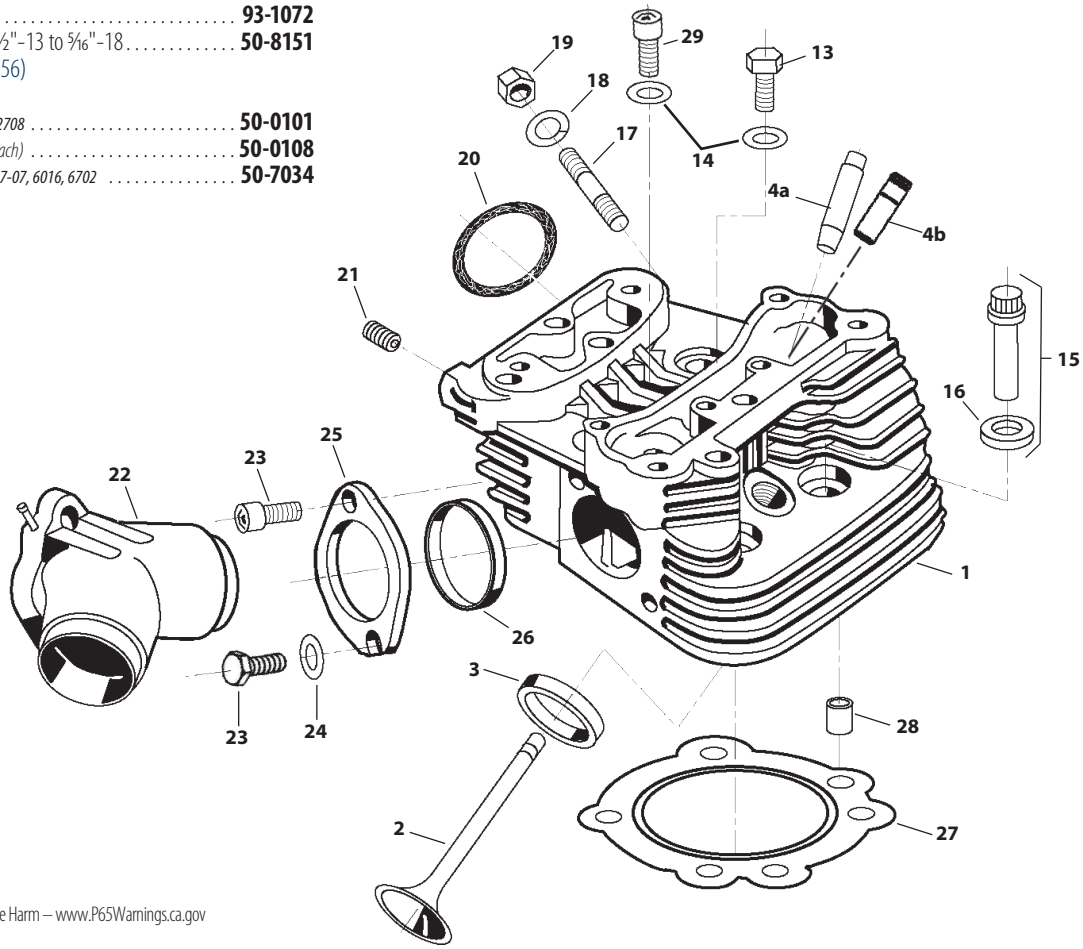


±⚠ WARNING: Cancer and Reproductive Harm – www.P65Warnings.ca.gov

# SUPER STOCK® CYLINDER HEADS REPLACEMENT PARTS

## FOR S&S 4⅛" V-SERIES

**1.** Cylinder head - All S&S 4⅛" bore (See PAGE 53)

**2.** Valve
- Intake
  - 2.000" diameter ..... **90-2000**
  - 2.000" diameter +.085" stem length ..... **90-2004**
- Exhaust
  - 1.605" diameter ..... **90-2001**

**3.** Valve seat
- Intake - 2.000" diameter ..... USA 1,2,3 **90-2002**
- Exhaust - 1.605" diameter ..... USA 1,2,3 **90-2003**

**4a.** Valve guide -Cast - Intake/Exhaust *(see valve guide diameter chart)*
- Standard Diameter .5625/.5620 *18112-92* ..... USA USA 1,2,3 **90-2210**
- +.001" Diameter .5635/.5630 *18130-83C* ..... USA **90-2211**
- +.002" Diameter .5645/.5640 *18133-83A, 18133-83D* ..... USA **90-2212**
- +.003" Diameter .5655/.5650 *18131-83C* ..... USA **90-2213**
- +.030" Diameter .5925/.5920 ..... USA **90-2219**

**4b.** Valve Guide - Powder Metal - Intake/Exhaust
- Standard ..... **900-0553**
- +.001 ..... **900-0554**
- +.002 ..... **900-0555**
- +.003 ..... **900-0556**

**5.** Head bolt assembly *(Includes head bolt washer)*
- 111" *(Includes washer .100")* ..... **93-3030**
- 117" *(Includes washer .250")* ..... **93-3037**
- 124" *(Includes washer .250")* ..... **93-3037**

**6.** Head bolt washer
- .150" *(each)* ..... **50-0418-S**
- .250" *(each)* ..... **50-7091**

**7.** Exhaust port stud *16715-83 (each)* ..... **50-0493**
- *5 pack* ..... **50-1028**

**8.** Lock washer - 5⁄16" ..... **50-7032**

**9.** Nut, flanged - 5⁄16"-24 *7593*
- Zinc *(each)* ..... **50-5025-S**
- *2 pack* ..... **50-5025-2**
- *5 pack* ..... **50-1001**
- Chrome *(each)* ..... **50-5030-S**±

**10.** Exhaust pipe gasket *(each) 65324-83B, 65324-83A* ..... **106-5029**
- *10 pack* ..... **93-1072**

**11.** Intake manifold (See Manifolds on PAGE 56 )

**12.** Manifold mounting screw
- SH - 5⁄16"-18 x ¾" *3275 (each)* ..... **50-0302-S**
- HH - 5⁄16"-18 x 1" *3987 (each)* ..... **50-0108**

**13.** Flat washer - 5⁄16" *6320, 70907-07, 6016, 6702* ..... **50-7034**

**14.** Manifold mounting flange
- Front *27009-86A (each)* ..... USA **16-0232**
- *5 pack* ..... USA **16-0600**
- Rear *27010-86A (each)* ..... USA **16-0233**
- *5 pack* ..... USA **16-0601**
- *Set of Two* ..... **106-3516**

**15.** Manifold o-ring *(each)* ..... **16-0235**
- *10 pack* ..... **16-0243**

**16.** Head gasket - All S&S SSW+ – 4⅛" Bore, Micropore
- *each* ..... **93-1047-S**
- *10 pack* ..... **93-1073**

**17.** Alignment dowel, base and head *16595-99A (each)* ..... **50-8177**
- *4 pack* ..... **50-8177-4**

**18.** Plug, HH - 14mm *(Use when compression releases are not installed)*
- *each* ..... **90-4916**
- *2 pack* ..... **90-4916-2**

**19.** Washer, compression – 14mm – .507" x .705" x .047" ..... **50-7094**

**20.** Head mount bolt ⅜"-16 x 1¼" *4716W* ..... **50-0168**

**21.** Flat washer - ⅜" ..... USA 1,2,3 **50-7051**

**22.** Vent hose fitting,
- Front, 1⁄16"-27 pipe ..... USA 3 **50-8117**
- Rear, ⅛"-27 pipe ..... USA 1,2,3 **50-8115**

**23.** Check Valve ..... **50-8122**

**24.** Screw, HHC, 5⁄16-18 x ⅝" *(each)* ..... **50-0106**

**25.** Washer, flat, .319" x .545" x .42" *(each)* ..... **50-7026**

**26.** Plug, Pipe, ¾ Taper, 1⁄16-27 NPTF x .156" ..... **50-8332**

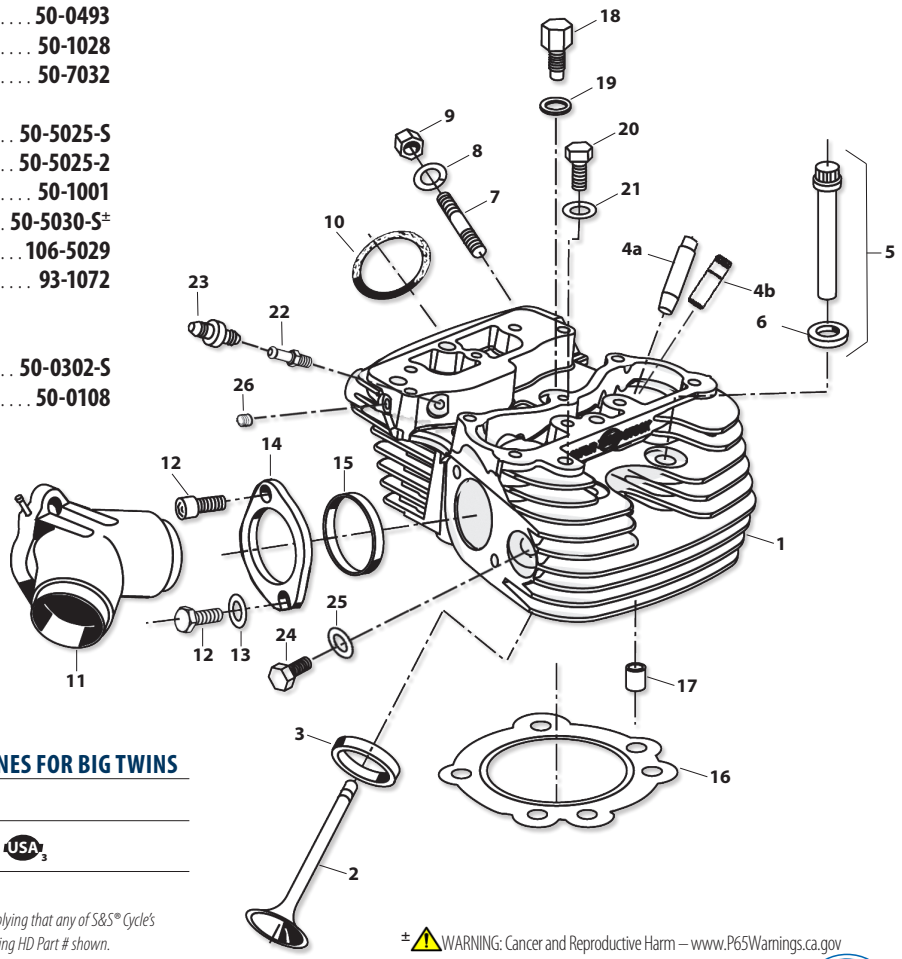


### TOP END REBUILD GASKET KITS FOR S&S® ENGINES FOR BIG TWINS

| Engine Family | Year Group | Bore Size | Part # |
|---|---|---|---|
| V-Series | 1984–'99 | 4⅛" | **90-9506** USA 3 |

*All reference to HD® Part #s is for identification purposes only. We in no way are implying that any of S&S® Cycle's products are original equipment parts or that they are equivalent to the corresponding HD Part # shown.*

± WARNING: Cancer and Reproductive Harm – www.P65Warnings.ca.gov

# SUPER STOCK® CYLINDER HEAD REPLACEMENT PARTS
## FOR 1984–'99 BIG TWIN 3⅝" TO 4" BORE

**1.** Cylinder head (See PAGE 52 & PAGE 53)

**2.** Valves
Intake
2.000" diameter ..... **90-2000**
2.000" diameter+ .085" stem length ..... **90-2004**
2.000" diameter+ .005" stem diameter ..... **90-2029**
Exhaust
1.605" diameter ..... **90-2001**
1.605" diameter,+.005" stem ..... **90-2030**

**3.** Valve seats
Intake - 2.000" diameter ..... USA 1,2,3 **90-2002**
Exhaust - 1.605" diameter ..... USA 1,2,3 **90-2003**

**4a.** Valve guide - intake or exhaust
Standard Diameter .5625/.5620 *18112-92* ..... USA USA 1,2,3 **90-2210**
+.001" Diameter .5635/.5630 *18130-83C* ..... USA **90-2211**
+.002" Diameter .5645/.5640 *18133-83A, 18133-83D* ..... USA **90-2212**
+.003" Diameter .5655/.5650 *18131-83C* ..... USA **90-2213**
+.030" Diameter .5925/.5920 ..... USA **90-2219**

**4b.** Valve Guide - Powder Metal - Intake/Exhaust
Standard ..... **900-0553**
+.001 ..... **900-0554**
+.002 ..... **900-0555**
+.003 ..... **900-0556**

**5.** Head mount bolt - ⅜"-16 x 1¼" *4716W*
*each* ..... **50-0168**

**6.** Flat washer - ⅜"
Zinc *(each)* ..... USA 1,2,3 **50-7051**
Chrome *(each)* ..... **50-7106-S**±

**7.** Head bolt assembly – Includes head bolt washer (See PAGE 54)

**8.** Head bolt washer
.150" *(each)* ..... **50-0418-S**
.250" *(each)* ..... **50-7091**

**9.** Exhaust port stud *16715-83 (each)* ..... **50-0493**
*5 pack* ..... **50-1028**

**10.** Lock washer - 5/16" *(each)* ..... **50-7032**

**11.** Nut, HH - 5/16" -24 *7833, 7883 (each)* ..... **50-5023**

**12.** Exhaust pipe gasket *65324-83B, 65324-83A (each)* ..... **106-5029**
*10 pack* ..... **93-1072**

**13.** Thread conversion insert ½"-13 to 5/16"-18 ..... **50-8151**

**14.** Intake manifold (See PAGE 56)

**15.** Screw, manifold mounting
SH - 5/16"-18 x 1" *3201WA, 2708 (each)* ..... **50-0101**
HH - 5/16"-18 x 1" *3987 (each)* ..... **50-0108**

**16.** Washer, flat - 5/16" *6320, 70907-07, 6016, 6702(each)* ..... **50-7034**

**17.** Flange, manifold mounting
Front *27009-86A (each)* ..... USA **16-0232**
*5 pack* ..... USA **16-0600**
Rear *27010-86A (each)* ..... USA **16-0233**
*5 pack* ..... USA **16-0601**
*Set* ..... **106-3516**

**18.** O-ring, manifold *(each)* ..... **16-0235**
*10 pack* ..... **16-0243**

**19.** Head gasket 3½" Bore
.045" thick (no o-rings required) *16770-84D, 16770-84F*
*each* ..... **93-1011-S**
*10 pack* ..... **93-1024**
.0625" thick (no o-rings required) *16770-84D, 16770-84F, 10773-85*
*each* ..... **93-1313-S**
*10 pack* ..... **93-1051**
3⅝" Bore .045" thick *(no o-rings required) (each)* ..... **93-1037-S**
*10 pack* ..... **93-1052**
.062" thick *(no o-rings required) (each)* ..... **93-1016-S**
*10 pack* ..... **93-1053**
4" Bore
.045" thick *(each)* ..... **93-1040-S**
*10 pack* ..... **93-1071**
.070" diameter *26432-76A* ..... **50-8034-S**

**20.** Alignment dowel *16574-99A, 16573-83, 16573-83A (each)* ..... **50-8023**
*10 pack* ..... **50-8109**
Dowel pin - ¼" diameter x ½" - 4" bore *358, 366 (each)* ..... **50-8022**
*2 pack* ..... **50-8022-2**
*5 pack* ..... **50-8105**

**21.** Plug, HH - 14mm *(each)* ..... **90-4916**
*2 pack* ..... **90-4916-2**

**22.** Washer, compression release - 14mm
.507" x .705" x .047" *(each)* ..... **50-7094**

*All reference to HD® Part #s is for identification purposes only. We in no way are implying that any of S&S® Cycle's products are original equipment parts or that they are equivalent to the corresponding HD Part # shown.*

±⚠ WARNING: Cancer and Reproductive Harm – www.P65Warnings.ca.gov

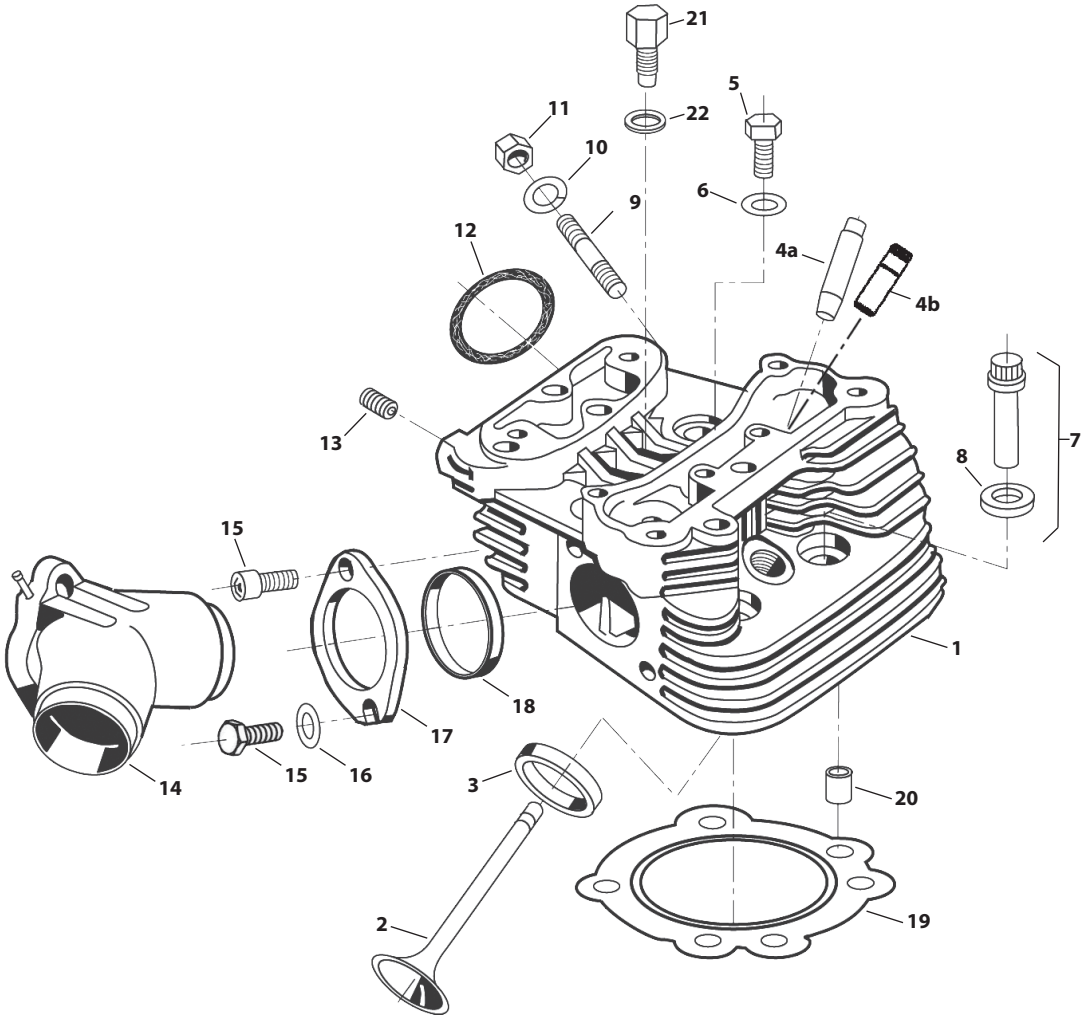


## TOP END REBUILD GASKET KITS FOR S&S® ENGINES FOR BIG TWINS

| Engine Family | Year Group | Bore Size | Part # |
|---|---|---|---|
| V-Series | 1984–'99 | 4" | **90-9503** USA 2 |
| V-Series | 1984–'99 | 3⅝" | **90-9502** USA 1 |

*All reference to HD® Part #s is for identification purposes only. We in no way are implying that any of S&S® Cycle's products are original equipment parts or that they are equivalent to the corresponding HD Part # shown.*

# DIE-CAST ROCKER COVER REPLACEMENT PARTS
## FOR 1984–'99 BIG TWINS & S&S 4⅛" BORE ENGINES

**1.** Screw, socket head ¼"-20 x ¾" *4069A (each)* ..... **50-0067**
**2.** Washer, flat ¼" *(each)* ..... **50-7017**
*12 pack* ..... **50-7013**
**3.** Washer, rubber coated ¼" *(each)* ..... **50-7015**
*8 pack* ..... **50-7015-8**
*12 pack* ..... **50-7015-12**
**4.** Seal, o-ring *(Included in gasket set see #16 below.)* ..... **50-8044**
**5.** Screw, SH ¼"-20 x 2" *25794-36* ..... **50-0013**
**6.** Screw, hex flange head 5⁄16"-18 x 2¼" *3501* ..... **50-0123**
**7.** Support, rocker arm ..... **90-4140**
**8.** Gasket, rocker housing, 1984-'99 bt
**a.** Gasket, Bottom, Rocker Cover, 1984-99 bt
*each* ..... **900-0538**
*2 pack* ..... **900-0592**
**b.** S&S 4⅛" Bore *16719-99B (each)* ..... **90-4071-S**
*2 pack* ..... **90-4071**
*10 pack* ..... **90-4099**
**9.** Housing, rocker, chrome
1984-'99 bt ..... **900-0790**±
S&S 4⅛" Bore ..... **900-4283**±
**10.** Screw, 1984-'99 bt, SHCS ¼"-20 x 1" *4741A (each)* ..... **50-0092-S**
*4 pack* ..... **50-0092P**
S&S 4⅛" Bore, SHCS 5⁄16"-18 x 1" ..... **50-0125-S**
**11.** Seal, rocker cover (Included in gasket set see #16 below.) . **90-4079**
**12.** Washer, flat 5⁄16" *(each)* ..... **50-7026**
**13.** Screw, SH 5⁄16"-18 x 2¼" *(each)* ..... **50-0115-S**
**14.** Screw, socket head, ¼"-20 x 1" (S&S 4⅛" bore only) *4741A*
*each* ..... **50-0092-S**
*4 pack* ..... **50-0092P**
**15.** Cover, rocker, chrome ..... **900-0706**±
**16.** Gasket Set (N/S)
1984-'99 bt ..... **90-4091**
S&S 4⅛" Bore ..... **90-4111**
**17.** Washer, flat, .261"x.474"x.050" Annealed, Stainless Steel
*each* ..... **50-7020**

**(N/S) = Not Shown**

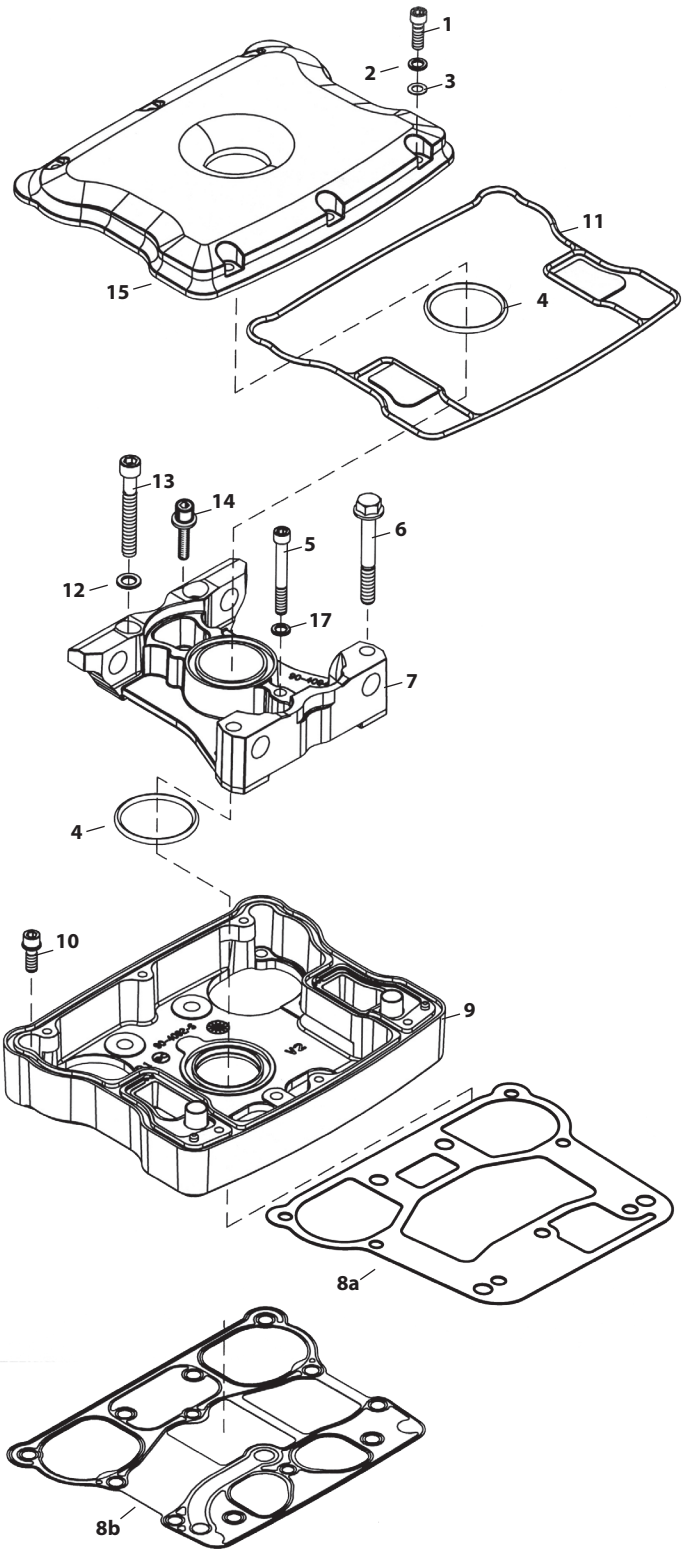


*All reference to HD® Part #s is for identification purposes only. We in no way are implying that any of S&S® Cycle's products are original equipment parts or that they are equivalent to the corresponding HD Part # shown.*

± WARNING: Cancer and Reproductive Harm – www.P65Warnings.ca.gov

# BILLET ROCKER COVER REPLACEMENT PARTS
## FOR 1984-'99 BIG TWIN ENGINES

**1.** Screw, SH - ¼"-20 x ¾" *4069A (each)* ..... **50-0067**
**2.** Washer, flat - ¼" *(each)* ..... **50-7017**
*12 pack* ..... **50-7013**
**3.** Washer, flat - ¼" rubber covered *(each)* ..... **50-7015**
*8 pack* ..... **50-7015-8**
*12 pack* ..... **50-7015-12**
**4.** O-ring – 1⅜" I.D. x 1⅞" O.D. x ⅛" CS Viton ®
(Included in gasket set – See #16 below.)
**5.** Rocker cover umbrella valve cover – 1992-'99 big twin
(Included in gasket set. See #16 below.)
*26856-89, 26856-89A* ..... **90-4030**
**6.** Gasket, Bottom, Rocker Cover, 1984-99 bt *(each)* ..... **900-0538**
*2 pack* ..... **900-0592**
**7.** Rocker cover base – billet
Chrome ..... **90-4051**±
Natural ..... **90-4056**
**8.** Screw, SH w/washer – ¼"-20 x 1" *4741A (each)* ..... **50-0092-S**
*4 pack* ..... **50-0092P**
**9.** Rocker cover o-ring gasket – S&S billet rocker cover
(Included in gasket set. See #16 below.)
**10.** Washer, flat – 5⁄16" *(each)* ..... **50-7026**
**11.** Bolt, rocker support – socket head
**a.** 5⁄16"-18 x 2-¼" (left support) .....
*each* ..... **50-0115-S**
**b.** 5⁄16"-18 x 2-½" (right support) *876A*
*each* ..... **50-0118**
**12.** Rocker cover top – billet
Chrome ..... **90-4054**±
**13.** Right rocker shaft support – billet ..... **90-4053**
**14.** Left rocker shaft support – billet. ..... **90-4052**
**15.** Rocker cover gasket set – S&S billet rocker cover – **(N/S)** . **90-4049**
**16.** Rocker cover hardware kit – **(N/S)** ..... **90-4050A**

**(N/S) = Not Shown**

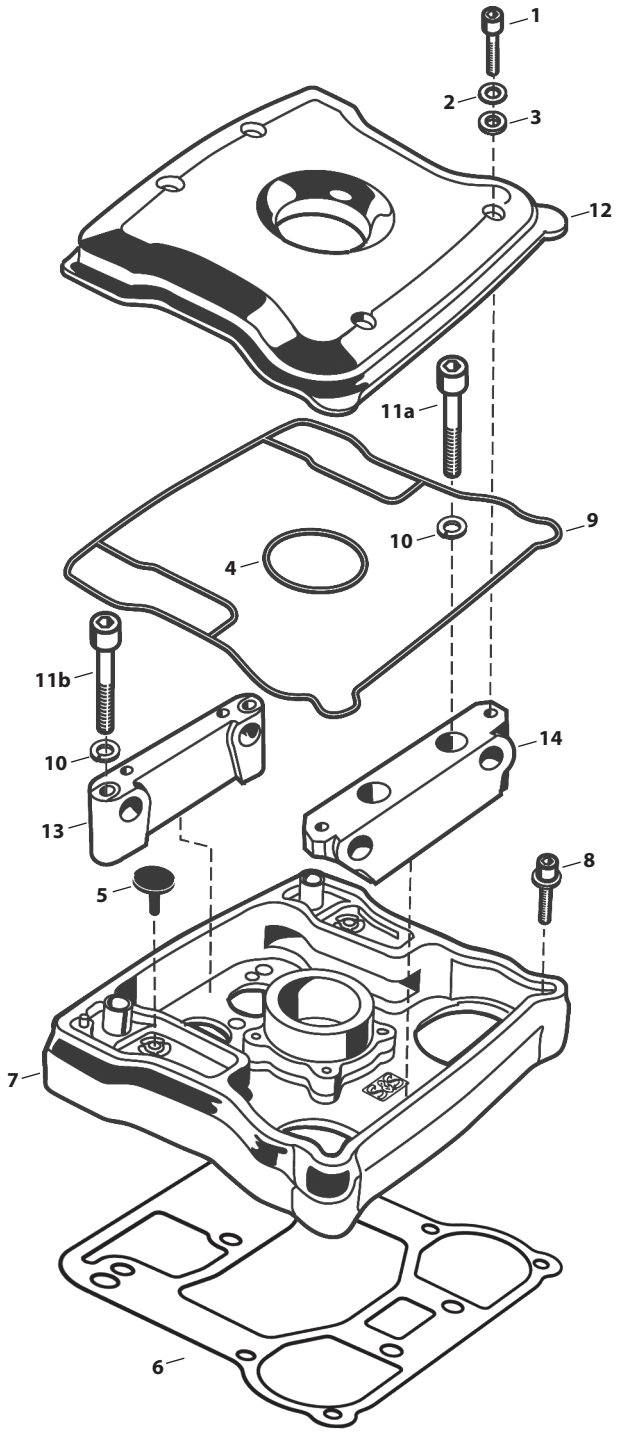


*All reference to HD® Part #s is for identification purposes only. We in no way are implying that any of S&S® Cycle's products are original equipment parts or that they are equivalent to the corresponding HD Part # shown.*

± WARNING: Cancer and Reproductive Harm – www.P65Warnings.ca.gov

# STEALTH AIR CLEANER KIT REPLACEMENT PARTS

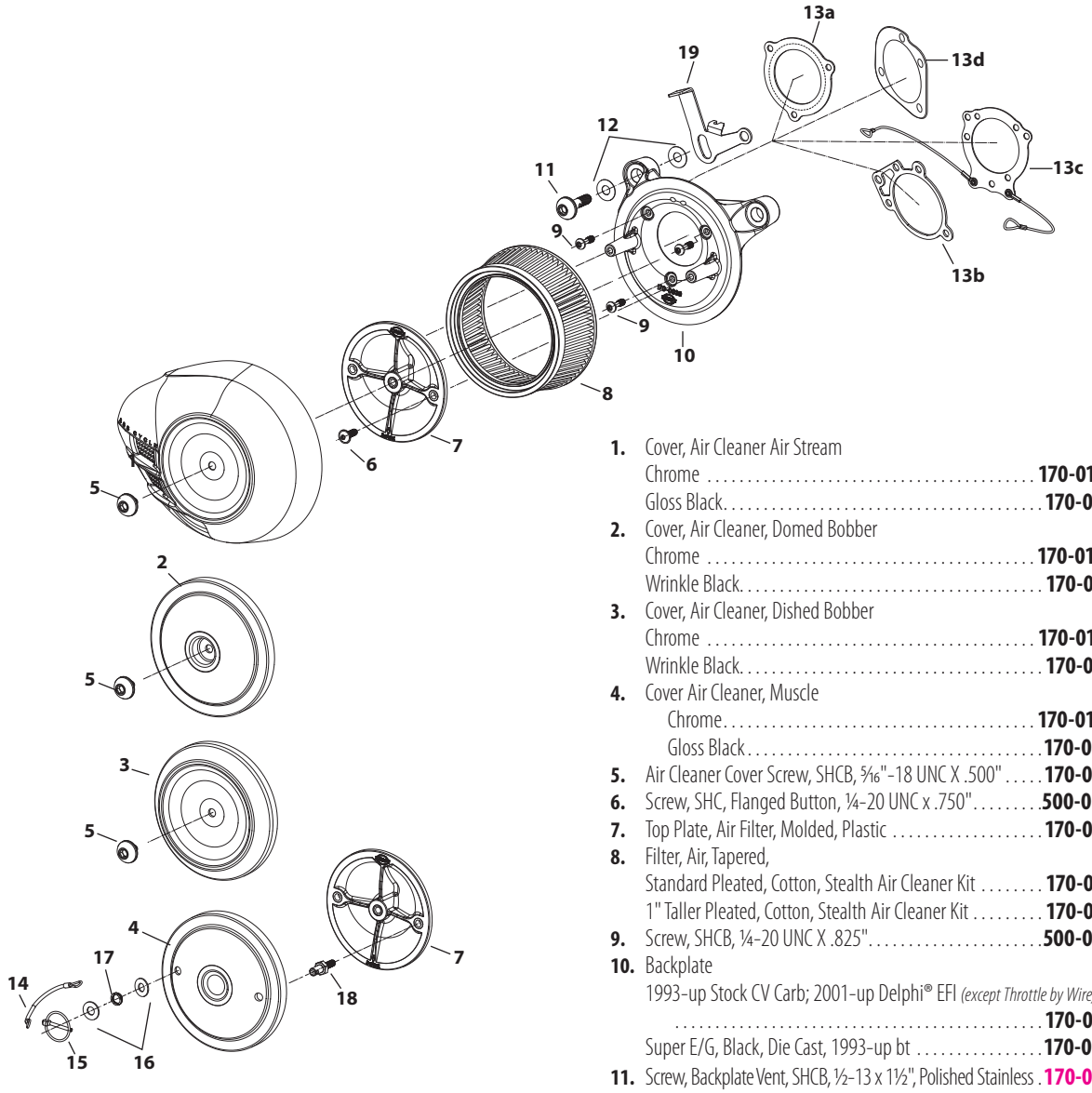


1. Cover, Air Cleaner Air Stream
   - Chrome ..... **170-0118**±
   - Gloss Black ..... **170-0396**
2. Cover, Air Cleaner, Domed Bobber
   - Chrome ..... **170-0120**±
   - Wrinkle Black ..... **170-0124**
3. Cover, Air Cleaner, Dished Bobber
   - Chrome ..... **170-0119**±
   - Wrinkle Black ..... **170-0123**
4. Cover Air Cleaner, Muscle
   - Chrome ..... **170-0172**±
   - Gloss Black ..... **170-0462**
5. Air Cleaner Cover Screw, SHCB, 5⁄16"-18 UNC X .500" ..... **170-0508**
6. Screw, SHC, Flanged Button, ¼-20 UNC x .750" ..... **500-0060**
7. Top Plate, Air Filter, Molded, Plastic ..... **170-0026**
8. Filter, Air, Tapered,
   - Standard Pleated, Cotton, Stealth Air Cleaner Kit ..... **170-0126**
   - 1" Taller Pleated, Cotton, Stealth Air Cleaner Kit ..... **170-0127**
9. Screw, SHCB, ¼-20 UNC X .825" ..... **500-0059**
10. Backplate
    - 1993-up Stock CV Carb; 2001-up Delphi® EFI *(except Throttle by Wire)* ..... **170-0021**
    - Super E/G, Black, Die Cast, 1993-up bt ..... **170-0049**
11. Screw, Backplate Vent, SHCB, ½-13 x 1½", Polished Stainless . **170-0044**
12. Washer, Flat, Nitrile Rubber Coated
    - .520" x .880" x .024" BT 1993-'99 & xl 1991-'06 *(each)* .... **50-7055**
    - 10 pack ..... **50-7057**
    - .380" x .880" x .024" BT 1999-'06 (each) ..... **50-7054**
    - 10 pack ..... **50-7059**
13. Gasket, Backplate
    - **a.** Throttle by Wire, .0625"Thick, 2008-up bt ..... **160-0035**
    - **b.** Super E/G ..... **106-1724**
    - **c.** Stock CV Carb & EFI Throttle Body, Throttle by Wire, Lanyard style, 1991-up xl/bt ..... **170-0137**
    - **d.** Stock CV Carb & EFI Throttle Body, 1991-up xl/bt *(except Throttle by ... Wire) 29062-95B* ..... **106-6022**
14. Lanyard, 6" Stainless Steel ..... **500-0095**
15. Lynch Pin ..... **500-0083**
16. Washer, Fender, Chrome Plated ..... **500-0094**±
17. Spring, Wave Washer, Stainless Steel ..... **500-0093**
18. Screw, Hex, Hood-pin, ¼-20, UNC ..... **500-0113**
19. Lever,Enrch,SuperE/G,Stealth,Short ..... **17-0327**

*All reference to HD® Part #s is for identification purposes only. We in no way are implying that any of S&S® Cycle's products are original equipment parts or that they are equivalent to the corresponding HD Part # shown.*

± WARNING: Cancer and Reproductive Harm – www.P65Warnings.ca.gov

# SINGLE BORE TUNED INDUCTION SYSTEM REPLACEMENT PARTS

1. Tuned Intake Kit, 2.19" Single Bore
   - Natural ..... **106-4968**
   - Gloss Black ..... **170-0453**
   - Chrome Plated ..... **106-4970**±
2. Tuned Intake Assembly, 2.19" Single Bore
   - Gloss Black ..... **170-0454**
   - Chrome Plated ..... **106-4967**±
3. Air Filter, with Clamp
   Stainless Cap – Conical – 2⁷⁄₁₆" I.D. x 4"
   - Red *(each)* ..... **17-1020**
   - Blue *(each)* ..... **17-1023**
4. Gasket, Intake – Adapter Plate
   2.19" Single Bore Tuned Intake ..... **17-1022**
5. Plate, Adapter, 2.19" Single Bore Tuned Intake
   Chrome Steel ..... **17-1014**±
6. FHSC ¼-20 x ⅝" ..... **50-0433**
7. FHSC ⁵⁄₁₆-18 x ⅝" ..... **50-0432**
8. O-ring, Adapter Plate Bracket
   3⅝" O.D. x 3½" I.D. ⅛ CS, Viton® ..... **50-0446**
9. Bracket Kit, 2.19" Single Bore Tuned Intake
   - Super E/G, S&S V124 - Chromed ..... **106-4973**±
   - Super E/G, 1984-'99 BT - Chromed ..... **106-4974**±
   - Single VFI, S&S V124 - Chromed ..... **106-4976**±
   - Single VFI, 1984-'99 BT - Chromed ..... **106-4977**±
   - Stock carb, Delphi® EFI, 1984-'99 BT - Chromed ..... **106-4978**±
10. Backplate Screw
    - Screw, SHC, w/Threadlock, ¼-20 x ½" ..... **106-2084**
    - *10 pack* ..... **106-2105**
11. Screw, ⁵⁄₁₆-18 x 1¼, BHC, Chrome ..... **50-0309-S**±
12. Flat Washer ⁵⁄₁₆" x ⅛" *6320, 70907-07, 6016, 6702* ..... **50-7034**
13. Hose, Breather, ¼" I.D., 90° ..... **19-0178A**
14. Screw, Breather Fitting, ⅜-16 x 1¼" ..... **50-0436**
15. Washer, Flat, ⅜" x ¹³⁄₁₆" x ⅛", Chrome ..... **50-7106-S**±
16. Screw, Breather Fitting, ½-13 x 1.25 ..... **50-0435**
17. Shim Kit
    - a. ⁵⁄₁₆" I.D. 1984-'92 BT ..... **17-0314**
    - b. ½" I.D. 1993-'99 BT ..... **17-0464**
18. Enrichment Device, S&S Super E & G carbs
    (Use in place of enrichment device on air cleaner backplate) ..... **11-2084**±
19. Gasket, Backplate - E/G/SBEFI ..... **106-1724**
    - *10 pack* ..... **106-2328**
20. Gasket, S&S SBEFI 58mm ..... **106-4662**
21. Gasket, Stock carb/Throttle Body *29062-95B* ..... **106-6022**
22. Hardware Kit, 1984-'99 - (N/S)
    Stock Carb & S&S Single Bore EFI ..... **17-5098**
    - S&S Super E or G Carb ..... **17-5099**±
    - S&S 124 V-Series ..... **500-0016**
23. Canister Purge Fitting Cap *(each)* ..... **50-8266-S**
24. Breather Vent Hose ..... **106-4982**

**(N/S) = Not Shown**

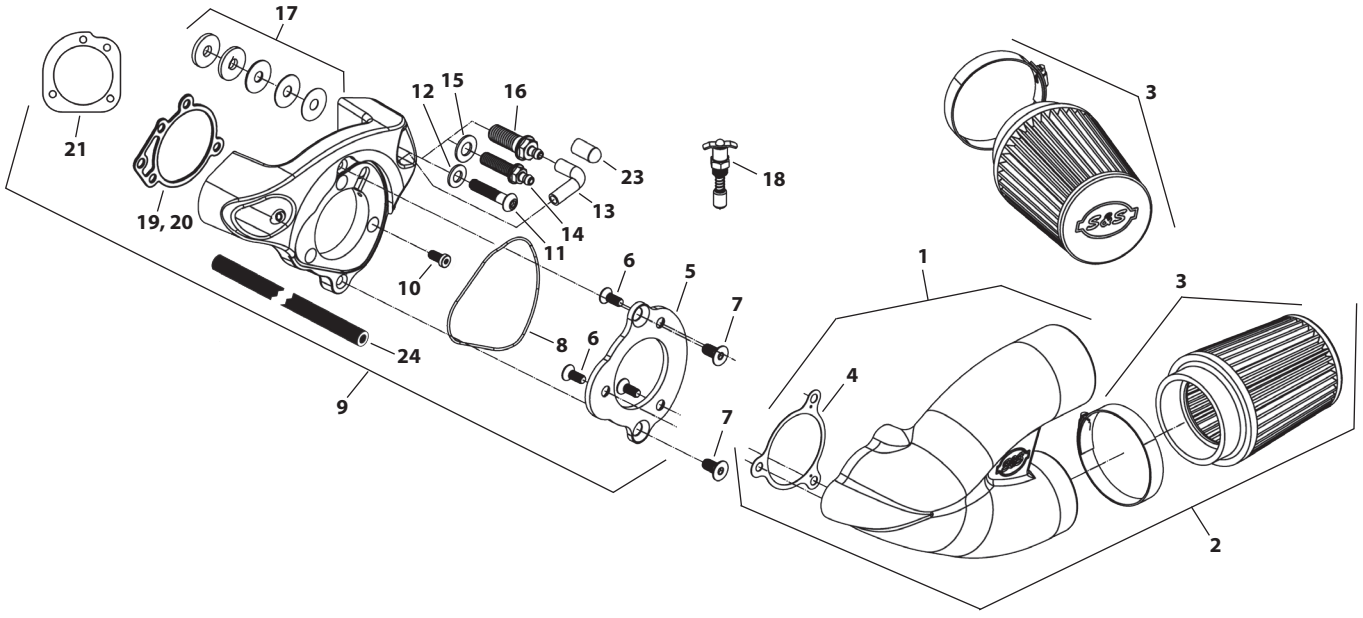



106-0248


17-1020


17-1023


106-1163


106-1164

## ACCESSORIES

| Description | | Part # |
|---|---|---|
| Air Filter Oil, 8 oz. Bottle | Red | **106-1163** |
| | Blue | **106-1164** |
| Nylon Air Filter Cover | *each* | **106-0247** |
| | *2 pack* | **106-0248** |

± ⚠ WARNING: Cancer and Reproductive Harm – www.P65Warnings.ca.gov

*All reference to HD® Part #s is for identification purposes only. We in no way are implying that any of S&S® Cycle's products are original equipment parts or that they are equivalent to the corresponding HD Part # shown.*

# AIR CLEANER REPLACEMENT PARTS
## FOR STOCK FUEL SYSTEMS

**1.** Air cleaner cover
Chrome ..... **17-0078**±
Black ..... **17-0075**
**2.** Element ..... **17-0079**
**3.** Backplate
BT 1966-'89..... **106-0907**
**4.** Cover screw *1305 (each)*..... **50-0072**
*3 pack*..... **50-1052**
*10 pack*..... **50-0094**
Black *902 (each)*..... **50-0310-S**
*3 pack*..... **50-0310**
**5.** Screw HHCS ¼"-28 x ⅞"..... **50-0074**
**6.** Backplate screw
Zinc Plated *(each)*..... **106-2084**
*10 pack*..... **106-2105**
**7.** Shim kit
**a.** BT 1966-'89 *(Includes 2 each 5⁄16" x .018", 5⁄16" x .030", 5⁄16" x .048", 5⁄16" x .105" and 4 each 5⁄16" x .125")* ..... **17-0314**
**b.** BT 1993-'99 *(Includes 2 each ½" x .018", ½" x .030", ½" x .048", ½" x .105", and 4 each ½" x .125")*..... **17-0464**
**8.** Replacement shims
**BT 1966-'89**
**a.** 5⁄16" x .018" *(each)*..... **50-7038**
**b.** 5⁄16" x .030" *(each)*..... **50-7039**
**c.** 5⁄16" x .048" *(each)*..... **50-7040**
**d.** 5⁄16" x .105" *(each)*..... **50-7041**
**e.** 5⁄16" x .125" *(each)* ..... **50-7042**
**BT 1993-up**
**f.** ½" x .018" *(each)* ..... **50-7085**
**g.** ½" x .030" *(each)* ..... **50-7086**
**h.** ½" x .048" *(each)* ..... **50-7087**
**i.** ½" x .105" *(each)* ..... **50-7089**
**j.** ½" x .125" *(each)* ..... **50-7090**
**BT 1999-up, All 2002-up EFI BT**
**k.** ⅜" x .025" *(each)* ..... **50-7113**
*10 pack* ..... **50-7110**
**l.** ⅜" x .050" *(each)* ..... **50-7114**
*10 pack* ..... **50-7111**
**m.** ⅜" x .075" *(each)* ..... **50-7115**
*10 pack* ..... **50-7112**
**9.** Shim, head vent - .62" I.D. x .80" O.D. x .175"
**10.** O-ring
**a.** (-014),.500" ID x .625" OD,Nitrile *(each)*..... **50-8270**
*5 pack*..... **50-8275**
**b.** (-012),.375" ID x .500" OD,Viton® *11110 (each)* ..... **50-8006**
*10 pack*..... **50-8077**
**11.** Breather fitting (each) ..... **17-0350**
*2 pack*..... **17-0355**
**12.** Crankcase breather vent hose
**a.** BT 1984-'92..... **17-0113**
**b.** BT 1993-'99..... **17-0339**
**13.** Vent hose connector,
BT 1984-'92..... **50-8111**
**14.** Vent hose, with angle cut ..... **17-0365**
**15.** 90° Elbow fitting *(each)*..... **50-8110**
**16.** Hose fitting ..... **17-0336C-S**
**17.** Flatwasher, ¼" *6194, 6245, 6703, 6736, 6228W, 6192 each* ..... **50-7021**
**18.** Backplate plug, ⅛" -27 NPT *45830-48*
*each*..... **50-8331A**
*10 pack*..... **50-1015**
**19.** Plug, press-in clear plastic..... **50-8313**
**20.** Support bracket locknut - ¼"-28 x ⅞"
*each*..... **50-5010**
**21.** Support bracket screw - 5⁄16"-18 x 1¼" ..... **50-0110**
**22.** Lockwasher, 5⁄16"..... **50-7032**
**23.** Support bracket, Air cleaner to head
BT 1984-'99..... **17-0311**
**24.** Rubber tubing - ¼" x ⅝" x 3' ..... **N/A**
**25.** Wire tie **(N/S)** ..... **50-8003**
**26.** Hardware kit, air cleaner mounting **(N/S)**
BT 1984-'99..... **N/A**
**27.** Washer, flat - ⅜" x ⅞" x .146"
*each*..... **50-7053**
**28.** Carb support bracket –
BT 1999-up & EFI Softail® 2001 ..... **N/A**
**29.** Shim - ¼" x ¾" x .200" ..... **50-7024**
**30.** Screw vent fitting
**a.** BT 1993-'99..... **17-0347**
**b.** BT 1999-up ..... **17-0345**
**31.** Screw air cleaner backplate..... **17-0346**
**32.** Spring clamps **(N/S)**..... **50-8001**
**33.** Breather cap screw..... **17-0338**
**34.** Breather screw seal
**a.** BT 1993-'99, All 2002 EFI BT - Washer .520 *(each)*..... **50-7055**
*10 pack* ..... **50-7057**
**b.** BT 1999-up, All 2002 EFI BT - Washer .380 *(each)* ..... **50-7054**
*10 pack* ..... **50-7059**

**FI = fuel injected**
**(N/S) = Not Shown**

CONTINUED ON NEXT PAGE

*All reference to HD® Part #s is for identification purposes only. We in no way are implying that any of S&S® Cycle's products are original equipment parts or that they are equivalent to the corresponding HD Part # shown.*

± WARNING: Cancer and Reproductive Harm – www.P65Warnings.ca.gov

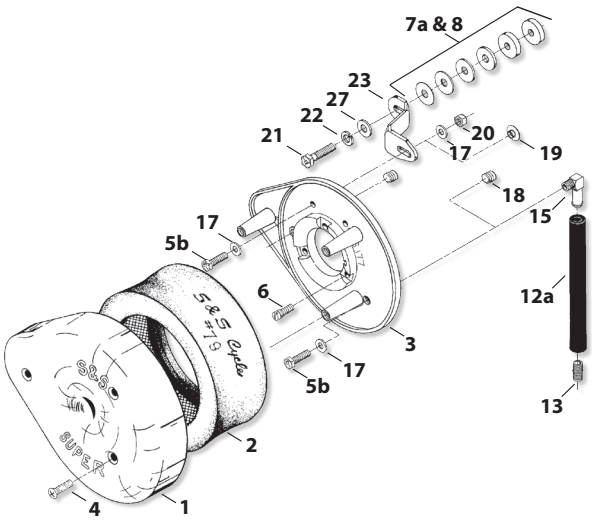


**1984–'89 BIG TWIN**
**(WITH BUTTERFLY CARBURETOR) 17-0108**

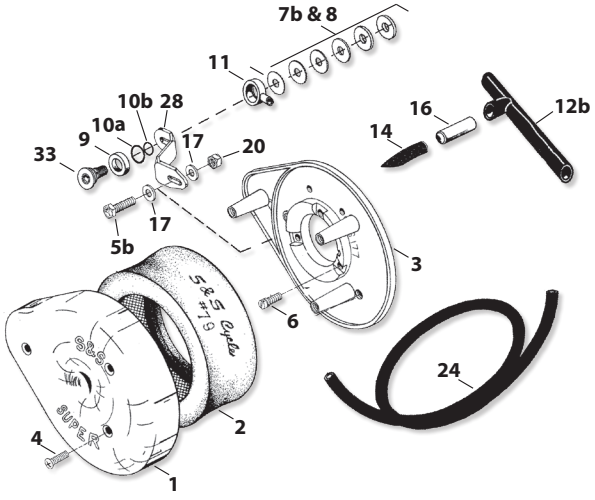


**1993–'99 BIG TWIN**
**(WITH CV CARBURETOR) (OBSOLETE) 17-0100**

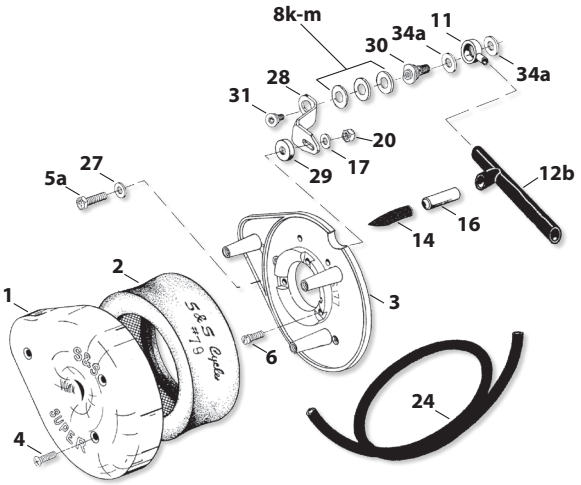


**1993–'06 CARBURETED BIG TWIN MODELS,**
**2001 EFI SOFTAIL® MODELS, AND 2002-UP ALL EFI MODELS**
**(EXCEPT 2006–UP DYNA®) (OBSOLETE)**
**17-0117**

## 1993-UP (EXCEPT 2008-UP TOURING MODELS) BT STOCK CV AND DELPHI® SINGLE BORE EFI

**1.** Air cleaner cover
Chrome ..... **17-0378±**
Gloss Black ..... **170-0384A**
Slasher ..... **17-0004±**
**2.** Element, pleated ..... **106-4722**
**3.** Backplate
1993-2007 BT ..... **106-0907**
**4.** Cover screw *1305 (each)* ..... **50-0072**
*3 pack* ..... **50-1052**
*10 pack* ..... **50-0094**
Black *902 (each)* ..... **50-0310-S**
*3 pack* ..... **50-0310**
**5.** Backplate screw
Zinc Plated *(each)* ..... **106-2084**
*10 pack* ..... **106-2105**
**6.** Screw, air cleaner backplate ..... **17-0346**
7. Backplate plug ⅛"-27 *45830-48*
*each* ..... **50-8331A**
*10 pack* ..... **50-1015**
**8.** Gasket, backplate *(each)* ..... **106-1724**
*10 pack* ..... **106-2328**
**9.** Adaptor assembly
1993-'99 bt ..... **106-0881**
**10.** Hose, vent, breather, formed,
.250" x .375" x 1.825", 1993-'07 BT ..... **17-0364A**
**11.** Clamp, spring, 9⁄16" ..... **50-8001**
**12.** Banjo fitting *(each)* ..... **17-0350**
*2 pack* ..... **17-0355**
**13.** Washer, silicone coated steel
1993-up BT, ½" *(each)* ..... **50-7055**
*10 pack* ..... **50-7057**
1999-up BT, ½" *(each)* ..... **50-7054**
*10 pack* ..... **50-7059**
**14.** Breather screw,
1993-'98 BT ..... **106-0845**
1999-up BT ..... **17-0348**
**15.** Replacement shims
⅝" x .025" *(each)* ..... **50-7113**
*10 pack* ..... **50-7110**
⅝" x .050" *(each)* ..... **50-7114**
*10 pack* ..... **50-7111**
⅝" x .075" *(each)* ..... **50-7115**
*10 pack* ..... **50-7112**
**16.** Backplate Gasket *29062-95B* ..... **106-6022**

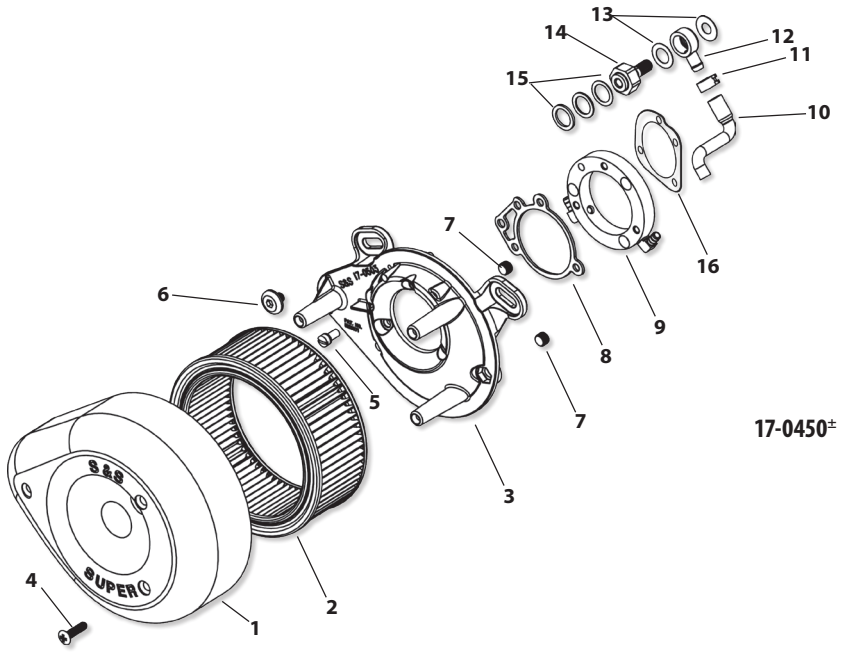


*All reference to HD® Part #s is for identification purposes only. We in no way are implying that any of S&S® Cycle's products are original equipment parts or that they are equivalent to the corresponding HD Part # shown.*

± WARNING: Cancer and Reproductive Harm – www.P65Warnings.ca.gov

## CONTINUED
## AIR CLEANER REPLACEMENT PARTS FOR STOCK FUEL SYSTEMS

### REPLACEMENT PARTS FOR S&S AIR CLEANER FOR MAGNETI MARELLI® EFI 1995–'01 BIG TWIN

**1.** Cover ..... **17-0378**±
**2.** Filter ..... **106-4722**
**3.** Backplate, Assembly, Air Cleaner, Stock EFI,
**4.** Screw, PHIL/OH ¼-20x1" *1305*
*each* ..... **50-0072**
*3 pack* ..... **50-1052**
*10 pack* ..... **50-0094**
**5.** Spacer, ½" Hex, Threaded ..... **N/A**
**6.** Stud, Fully Threaded, ¼-20 x 1.25", Zinc Plated
1995-'98 ..... **N/A**
1999-'01 ..... **N/A**
**7.** SHCS, ¼-20 x ¾" SEMS *(each)* ..... **50-0066**
**8.** Screw, SHCS,
1995-'98, ¼-20 x ¾", SEMS *4069A*
*each* ..... **50-0067**
1999-'01, 5⁄16-18 x ¾" *3275*
*each* ..... **50-0302-S**
**9.** Screw, LSHC 5⁄16-24, x ½" Stainless Steel
Front Head ..... **106-2023**
**10.** Cover, Breather Screw, Front Head
Chrome, Aluminum ..... **106-2022**±
**11.** Screw, Backplate Vent, Front Head
1995-'98, ½-13 ..... **17-0347**
1999-01, 5⁄16-18 ..... **17-0345**
**12.** Screw, Backplate, Rear Head, Socket Panhead
5⁄16 - 24 x .360", Zinc, Alloy Steel ..... **17-0346**
**13.** Screw, Breather, +.250" (Rear Head)
1995-'98, ½ -13 UNC. ..... **106-0845**
1999-'01 ..... **17-0348**
**14.** Washer, glat, Nitrile Rubber Coated, Cold Rolled Steel
1995-'98, .520" x .880" x .024"
*each* ..... **50-7055**
*10 pack* ..... **50-7057**
1999-01, .380" x .880" x .024"
*each* ..... **50-7054**
*10 pack* ..... **50-7059**
**15.** Clamp Spring, 9⁄16" ..... **50-8001**
**16.** Hose, Vent Breather,
Epichlorohydrin Polymer ..... USA 1,2 **17-0339**
**17.** Banjo Fitting *(each)* ..... **17-0350**
*2 pack* ..... **17-0355**
**18.** Spacer .406" x .975" x .250" *(each)* ..... **50-7140-S**
**19.** Bracket, Support, Air Cleaner To Head
Nickel Plated ..... **106-1285**
**20.** Washer, Flat, .281" x .625" x .080", Zinc, Steel
*6194, 6245, 6703, 6736, 6228W, 6192 (each)* ..... **50-7021**
**21.** Washer, Lock, .250" *7035, 7036* ..... **50-7019**
**22.** Screw, SHCS, ¼-20 x 1¼" *4740A, 3482A (each)* ..... **50-0008**

**N/A = No longer available**

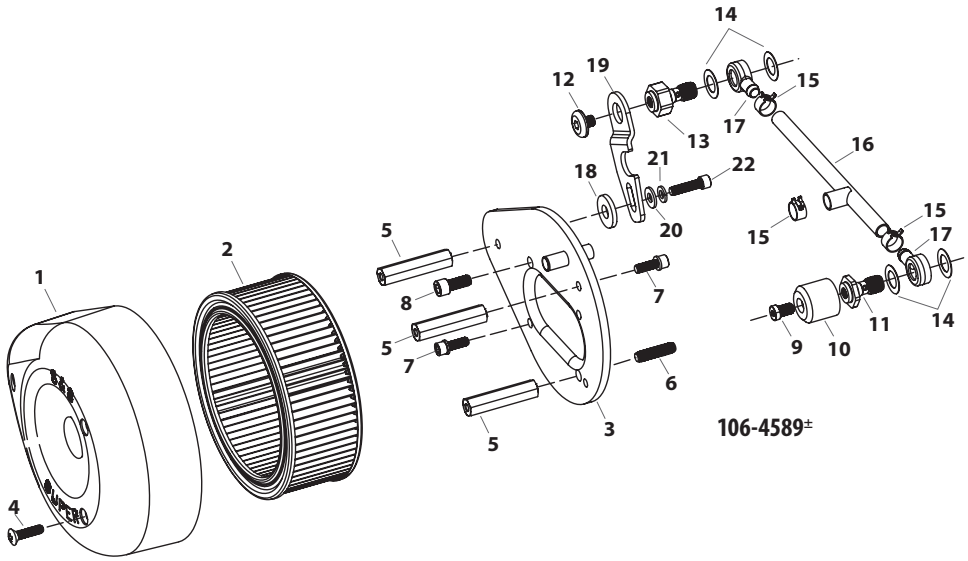


**106-4589**±

*All reference to HD® Part #s is for identification purposes only. We in no way are implying that any of S&S® Cycle's products are original equipment parts or that they are equivalent to the corresponding HD Part # shown.*

± WARNING: Cancer and Reproductive Harm – www.P65Warnings.ca.gov

# CLASSIC TEARDROP AIR CLEANER REPLACEMENT PARTS
## FOR S&S® SINGLE BORE EFI

**1.** Air Cleaner Cover
- Slasher *(slotted chrome)* ..... **17-0004**±
- Chrome ..... **17-0378**±
- Gloss Black *(includes black screws)* ..... **170-0384A**

**2.** Element, pleated ..... **106-4722**

**3.** Backplate SBFFI
- BT 1999-up ..... **17-0120**
- S&S 4-⅛" bore engines ..... **17-0380**

**4.** Screw, oval ¼-20 x *1305 (each)* ..... **50-0072**
- *3 pack* ..... **50-1052**
- *10 pack* ..... **50-0094**

**5.** Backplate screw
- Zinc Plated *(each)* ..... **106-2084**
- *10 pack* ..... **106-2105**
- Black *902 (each)* ..... **50-0310-S**
- *3 pack* ..... **50-0310**

**6.** Pipe plug, ⅛, air cleaner backplate *(each)* ..... **50-8331A**
- *10 pack* ..... **50-1015**

**7.** Mounting bracket bolt, hex 5⁄16-18 x 1¼ ..... **50-0110**

**8.** Flat washer, 5⁄16" x 1⁄16" *6320, 70907-07, 6016, 6702* ..... **50-7034**

**9.** Shim, .850" x .325" x .400" ..... **50-7027**

**10.** Shim kit for 4⅛" bore ..... **17-0314**
Individual shims:
- 5⁄16" x .018" *(each)* ..... **50-7038**
- 5⁄16" x .030" *(each)* ..... **50-7039**
- 5⁄16" x .048" *(each)* ..... **50-7040**
- 5⁄16" x .105" *(each)* ..... **50-7041**
- 5⁄16" x .125" *(each)* ..... **50-7042**

**11.** Screw, cable guide & air cleaner backplate
- 10-24 x ¼" *(each)* ..... **50-0041**
- *10 pack* ..... **50-0062**

**12.** Shims, individual
- ⅝ x ⅞ x .025 *(each)* ..... **50-7113**
- *10 pack* ..... **50-7110**
- ⅝ x ⅞ x .050 *(each)* ..... **50-7114**
- *10 pack* ..... **50-7111**
- ⅝ x ⅞ x .075 *(each)* ..... **50-7115**
- *10 pack* ..... **50-7112**

**14.** Silicone washer, ½" ID *(each)* ..... **50-7055**
- 10 pack ..... **50-7057**

**15.** Silicone washer, ⅜" ID *(each)* ..... **50-7054**
- *10 pack* ..... **50-7059**

**16.** Screw, wide head, 5⁄16-24 x .36 ..... **17-0346**

**17.** Air cleaner hardware kit (N/S)
- BT 1999-up ..... **17-0482**
- S&S 4-⅛" bore engines ..... **17-0481**

**18.** Breather vent fitting
- BT 1993-'99 ..... **17-0347**

**19.** Breather fitting *(each)* ..... **17-0350**
- *2 pack* ..... **17-0355**

**20.** Check Valve ..... **50-8122**

**21.** Hose, Vent Breather, Epichlorohydrin Polymer ..... **17-0339**

**22.** Clamp Spring, 9⁄16" ..... **50-8001**

**23.** Breather hardware for 4⅛" bore ..... **31-2104**
*(Not included in air cleaner kit)*

**24.** Clamp,Spring, .660" ..... **50-8076-S**

**25.** Hose one ..... **50-8263-S**

**26.** Hose two ..... **50-8262-S**

**27.** Clamp,Spring,.440" ..... **50-8143-S**

**28.** Hose,Cut To Size,.1875" x 6",Black,Rubber ..... **50-8142AS**

**(N/S) = Not Shown**

***NOTE:*** Breather hardware not included in these air cleaner kits.

*All reference to HD® Part #s is for identification purposes only. We in no way are implying that any of S&S® Cycle's products are original equipment parts or that they are equivalent to the corresponding HD Part # shown.*

± WARNING: Cancer and Reproductive Harm – www.P65Warnings.ca.gov

**1995½–'99 BIG TWIN**
**TEARDROP AIR CLEANER KIT . . 17-0498±**
**SLASHER AIR CLEANER KIT. . . . 17-0497±**

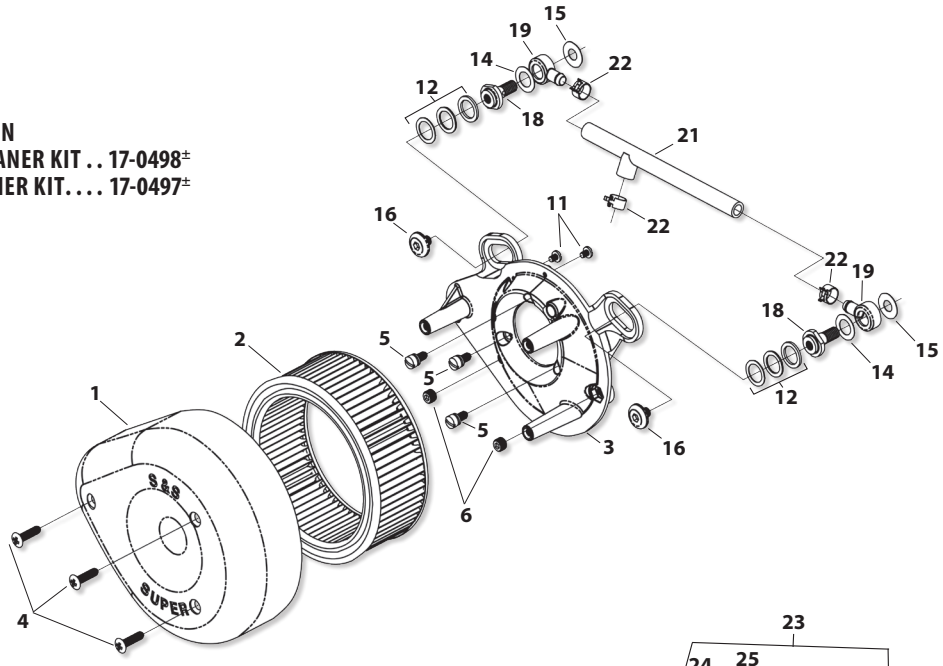


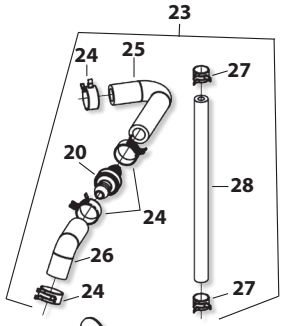


**S&S 4⅛" BORE ENGINES**
**SLASHER AIR CLEANER KIT . . . . 17-0496±**

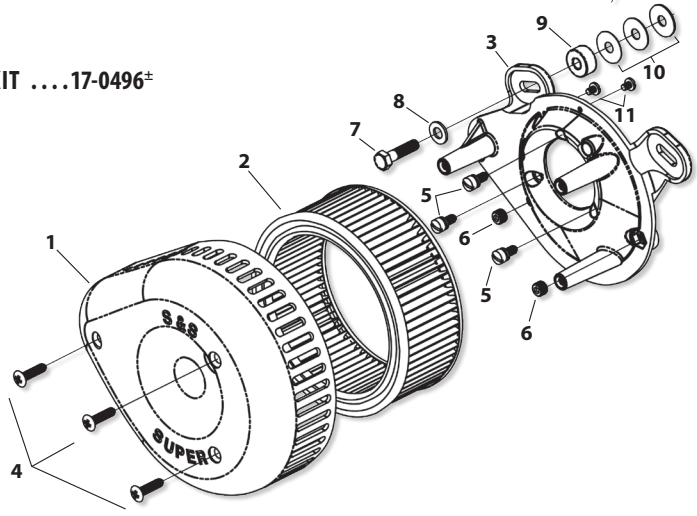


± ⚠ WARNING: Cancer and Reproductive Harm – www.P65Warnings.ca.gov

# SUPER E & G AIR CLEANERS REPLACEMENT PARTS
## FOR 1984–'99 BIG TWINS

**1.** Air cleaner cover –
Chrome ..... **17-0378±**
Gloss Black ..... **170-0384A**
Slasher ..... **17-0004±**
**2.** Element, pleated ..... **106-4722**
Element, pleated carbon ..... **17-0375**
**3.** Backplate
BT 1993-'99 ..... USA 1,2 **17-0336**
BT 1984-'92, S&S 4⅛" bore Manufactured
Prior to 1-1-03 ..... **17-0380**
4⅛" Bore – Manufactured
After 1-1-03 ..... USA 3 **17-0387**
**4.** Cover screw *1305 (each)* ..... **50-0072**
*3 pack* ..... **50-1052**
*10 pack* ..... **50-0094**
Black *902* ..... **50-0310-S**
*3 pack* ..... **50-0310**
TÜV style *(each)* ..... **50-0347-S**
**5.** Backplate screw, Zinc *(each)* ..... **106-2084**
*10 pack* ..... **106-2105**
**6.** Fast idle friction washer *(each)* ..... **50-7035**
*10 pack* ..... **50-7058**
**7.** Fast idle steel washer *(each)* ..... **50-7037**
*10 pack* ..... **50-7061**
**8.** Fast idle nylon washer *(each)* ..... **50-7036**
*10 pack* ..... **50-7060**
**9.** Fast idle lever ..... USA 1,2,3 **17-0329**
**10.** Fast idle brass washer *(each)* ..... **50-7007±**
*10 pack* ..... **50-7010±**
**11.** Fast idle lever screw *(one required for current backplate) (each)* ..... **50-0041**
*10 Pack* ..... **50-0062**
**12.** Shim kit
BT 1984-'92 ..... **17-0314**
*(Includes two each 5⁄16" x .018", 5⁄16" x .030", 5⁄16" x .048", 5⁄16" x .105", and four each 5⁄16" x .125")*
BT 1993-'99 ..... **17-0464**
*(Includes two each ½" x .018", ½" x .030", ½" x .048", ½" x .105", and four each ½" x .125")*
**13.** Shims
**a.** BT 1984-'92, S&S 4⅛" Bore
5⁄16" x .018" (each) ..... **50-7038**
5⁄16" x .030" (each) ..... **50-7039**
5⁄16" x .048" (each) ..... USA **50-7040**
5⁄16" x .105" (each) ..... **50-7041**
5⁄16" x .125" (each) ..... **50-7042**
**b.** BT 1993-'99
⅝" x .025" *(each)* ..... **50-7113**
*10 pack* ..... **50-7110**
⅝" x .050" *(each)* ..... **50-7114**
*10 pack* ..... **50-7111**
⅝" x .075" *(each)* ..... **50-7115**
*10 pack* ..... **50-7112**
**14.** Elbow fitting *(each)* ..... **50-8110**
**15.** Breather fitting *(each)* ..... **17-0350**
*2 pack* ..... **17-0355**
**16.** Crankcase breather hose
**a.** BT 1984-'92 ..... **17-0113**
**b.** BT 1993-'99 ..... USA 1,2 **17-0339**
**17.** Vent hose connector ..... **50-8111**
**18.** Backplate plug ⅛"-27 *(each)* ..... **50-8331A**
*10 pack* ..... **50-1015**
**19.** Flatwasher – 5/16" x 1⁄16" *6320, 70907-07, 6016, 6702* ..... **50-7034**
**20.** Mounting bracket bolt – 5⁄16"-18 x 1¼"
1984-'92, S&S 4⅛" Bore ..... **50-0110**
**21.** Wire tie **(N/S)** ..... **50-8003**
**22.** Hose clamp **(N/S)** ..... **50-8002**
**23.** Air cleaner assembly
*Includes: Chrome cover, backplate, filter element, and hardware kit.*
BT 1984-'92 ..... **17-0399±**
BT 1993-'99 ..... **17-0404±**
BT 1984-'05, 4⅛" Bore ..... **17-0416±**
**24.** Mounting hardware package (N/S)
*Includes all parts needed to install following style air cleaners:*
BT 1984-'92 ..... **17-0458±**
BT 1993-'99 ..... **17-0436±**
BT 1984-'05, 4⅛" Bore ..... **17-0460±**
**25.** Screw vent fitting, BT 1993-'99 ..... **17-0347**
**26.** Screw, air cleaner to head ..... **17-0346**
**27.** Washer, .520" silicone coated steel, BT 1993-'99 *(each)* ..... **50-7055**
*10 pack* ..... **50-7057**
**28.** Shim, .850" x .325" x .400"
S&S 4⅛" Bore ..... **50-7027**
**29.** Spring clamps (N/S) ..... USA 3 **50-8001**
**30.** Thread insert ½"-13 to 5⁄16" -18 (N/S) *(Used on 1992 big twins)* ..... **50-8151**
**31.** Breather conversion kit BT (N/S) ..... **17-0486**
Convert early S&S air cleaners for 1993-'99 BT with o-ring breather fittings to new style breather hardware.

**(N/S)= Not Shown**

*All reference to HD® Part #s is for identification purposes only. We in no way are implying that any of S&S® Cycle's products are original equipment parts or that they are equivalent to the corresponding HD Part # shown.*

± ⚠ WARNING: Cancer and Reproductive Harm – www.P65Warnings.ca.gov

**1984–'92 BIG TWIN . . . . . 17-0399±**

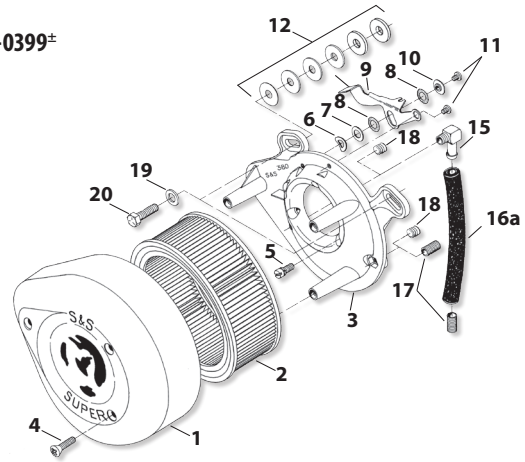


**1984–'05 BIG TWIN**
**4⅛" BORE . . . . . 17-0416±**

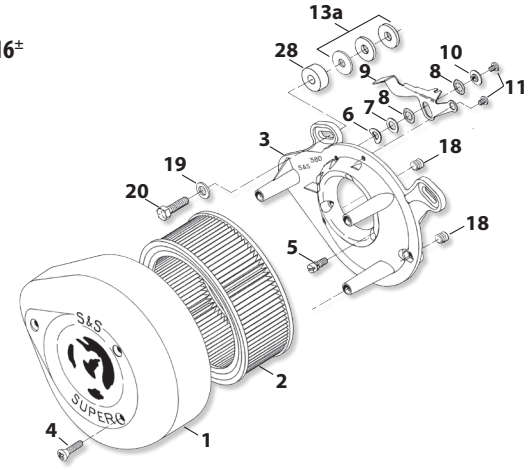


**1993–'99 BIG TWIN . . . . . 17-0404±**

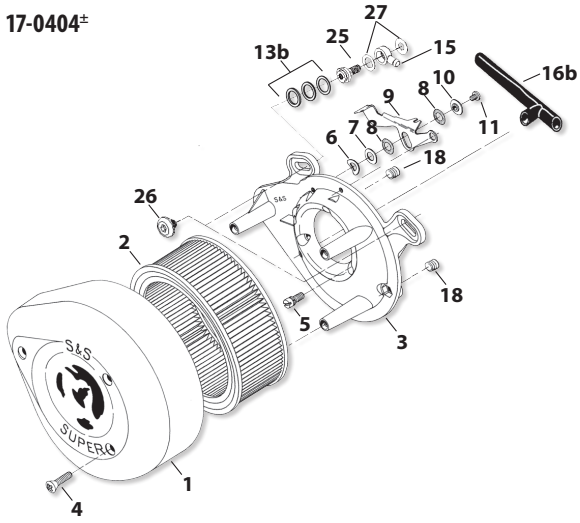

# CARB EXEMPT AIR CLEANER REPLACEMENT PARTS
## FOR S&S SUPER E OR G CARBS

1. Cover, air cleaner teardrop, chrome ..... **17-0378**±
2. Screw, phil/oval head ¼ - 20 x 1 *1305 (each)* ..... **50-0072**
   *3 pack* ..... **50-1052**
   *10 pack* ..... **50-0094**
3. Filter, air, sealed air cleaner ..... **106-1451**
4. O-ring, 7.613" x 7.753" x .070" Viton® ..... **N/A**
5. Bracket Kit, head to backplate
   V111, V117, V124 ..... **106-5210**
   Includes:
   Bracket, V111, V117, V124 ..... **17-0311**
   Washer,Flat, .281" x .625" x .080", Zinc, Steel
   *6194, 6245, 6703, 6736, 6228W, 6192 (each)* ..... **50-7021**
   Shim, .325" x 1" x .048", Stainless Steel ..... **50-7040**
   Shim,.325" x 1" x .105",Stainless Steel ..... **50-7041**
   Nut, Lock, HH, Gr5, ¼-20 ..... **N/A**
6. Backplate Assembly *(Backplate assembly includes #7-22)* ..... **N/A**
7. Valve assembly, backplate, sealed air cleaner ..... **N/A**
8. Pin, guide, stainless *(each)* ..... **17-0086**
9. Spring, 5.2 lb/in .24" OD x .208" ID x .25 stainless *(each)* .... **50-0489**
10. Washer, flat with .18" step .192" x.500" x .030" *(each)* .... **106-5772**
11. Screw, FHSC, ¼-20 x ¾" zinc *(each)* ..... **50-0491**
12. Screw, FHSC 5-40 x ⅜" stainless *(each)* ..... **106-1098**
13. Screw, SHS set cup point, 8-32 x ¼" stainless *(each)* ..... **106-1648**
14. Housing, solenoid, aluminum ..... **N/A**
15. Retaining ring, external E-type 3⁄32 shaft stainless ..... **106-3391**
16. Solenoid assembly, pull dual coil 12v ..... **N/A**
17. Pin, dowel, grooved .094" x 1" stainless ..... **106-3275**
18. Connector, kit, style DTM, 3-position male ..... **N/A**
19. Connector, kit, style DTM, 3-position female ..... **N/A**
20. Screw, FHSC, 8-32 x ½", stainless *1601 (each)* ..... **50-0353-S**
21. Plug, SH pipe, ⅛-27, NPT, zinc *45830-48 (each)* ..... **50-8331A**
    *10 pack* ..... **50-1015**
22. Stand-off ..... **N/A**
23. Enrichment device ..... **11-2084**±
24. Gasket, backplate *(each)* ..... **106-1724**
    *10 pack* ..... **106-2328**

**N/A = No longer available**

±⚠ WARNING: Cancer and Reproductive Harm – www.P65Warnings.ca.gov

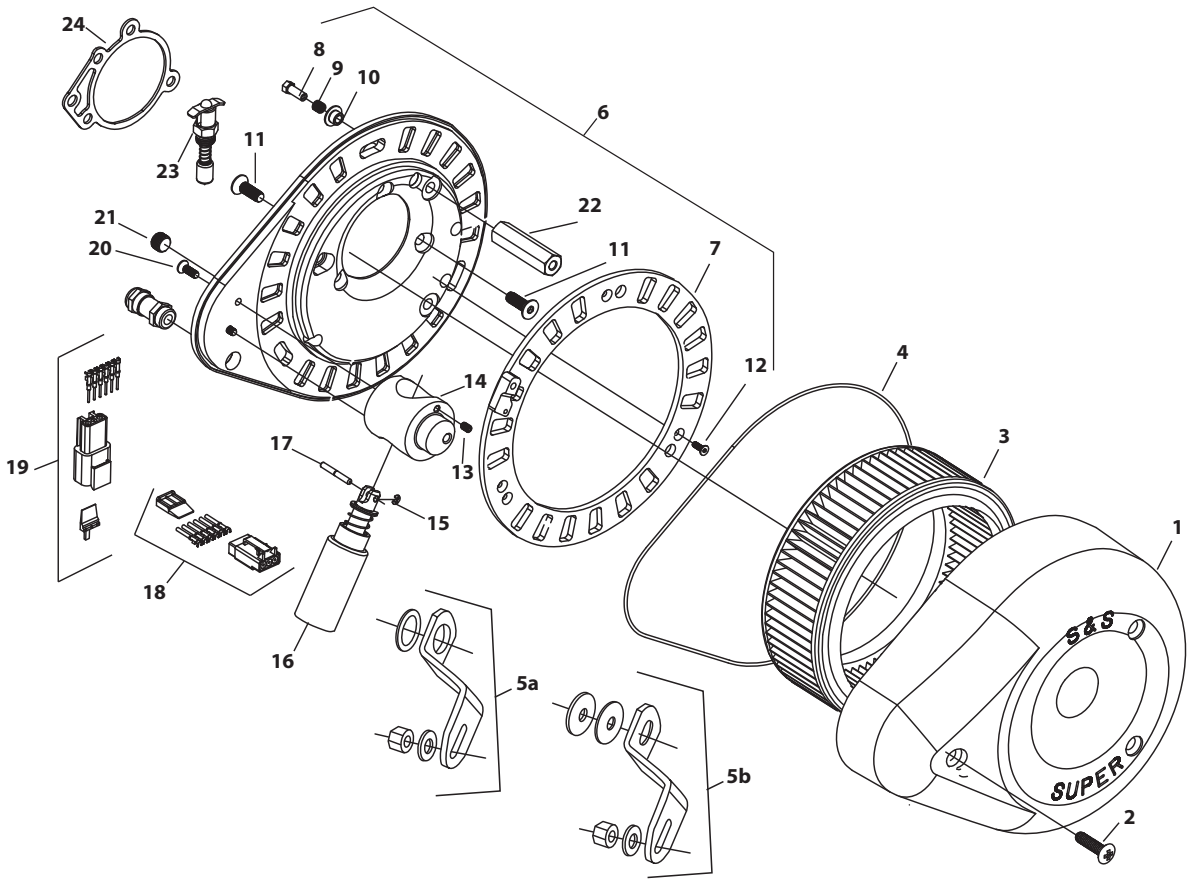


*All reference to HD® Part #s is for identification purposes only. We in no way are implying that any of S&S® Cycle's products are original equipment parts or that they are equivalent to the corresponding HD Part # shown.*

# SUPER E & G CARBURETOR REPLACEMENT PARTS

**1.** Carb body assembly
1⅞" Super E ..... **11-2381±**
2¹⁄₁₆" Super G ..... **11-2391±**

**2.** Throttle shaft
1⅞" Super E – Includes two plate screws ..... **11-2383**
2¹⁄₁₆" Super G – Includes two plate screws ..... **11-2483**

**3.** Throttle plate screw *11-2045- (two required) (each)* ..... **50-0055-S**
*10 pack* ..... **50-0064**

**4.** Throttle plate
1⅞" Super E ..... **11-2055**
2¹⁄₁₆" Super G ..... **11-2355**

**5.** Throttle return spring *(each)* ..... **11-2382**
*5 Pack* ..... **11-3502**

**6.** Throttle spool ..... **11-2385**

**7.** Throttle shaft lock washer *(two required)* ..... **50-7031**

**8.** Throttle shaft nut *(two required) (each)* ..... **11-2350**
*5 pack* ..... **11-2363**

**9.** Throttle shaft nylon washer *(each)* ..... **50-7050**
*10 pack* ..... **50-7072**

**10.** Pump actuator lever ..... **11-2376**

**11.** Actuator spring *(each)* ..... **11-2375-S**
*5 pack* ..... **11-3501**

**12.** Pump actuator arm ..... **11-2377**

**13.** Idle mixture screw
**a.** Idle mixture screw, brass *(each)* ..... **11-2354±**
*5 pack* ..... **11-2378±**
**b.** Idle mixture screw only
*each* ..... **110-0003**
Idle mixture screw w/500-0036 o-ring
*each* ..... **110-0068±**
*5 pack* ..... **110-0069±**

**14.** Idle mixture screw spring *(each)* ..... **11-2052**
*10 Pack* ..... **11-2060**

**15.** Idle speed screw *(each)* ..... **50-0038**
*10 Pack* ..... **50-0150**

**16.** Pump adjustment screw *(each)* ..... **50-0039**
*10 Pack* ..... **50-0146**

**17.** Idle speed/pump adjuster spring *(each)* ..... **11-2048**
*10 Pack* ..... **11-2053**

**18.** Plunger nut *(each)* ..... **11-2344±**
*5 pack* ..... **11-2372±**

**19.** Plunger spring *(each)* ..... **11-2340**
*10 Pack* ..... **11-2359**

**20.** Fast idle plunger ..... **11-2343**

**21.** Cable guide assembly with screw
Use with butterfly style cables ..... **11-2339P**
Use with constant velocity style cables ..... **11-2338P**

**22.** Cable clamp/float pin screw *(each)* ..... **50-0041**
*10 Pack* ..... **50-0062**

**23.** O-ring
1⅞" Super E *(each)* ..... **50-8016**
*10 Pack* ..... **50-8094**
2¹⁄₁₆" Super G *(each)* ..... **50-8015**
*10 Pack* ..... **50-8093**

**24.** Bellows seal *(each)* ..... **11-2266**
*5 pack* ..... **11-2279**

**25.** Bowl vent plug *(each)* ..... **50-0105**
*10 Pack* ..... **50-0151**

**26.** Main discharge tube ..... **11-2085±**

**27.** Main jet – See PAGE 60

**28.** Intermediate Jets – See PAGE 60
Series #94 fits all Super 1⅞", 2¹⁄₁₆", 2¼" gas carburetors.

**29.** Bowl gasket *(each)* ..... **11-2386**
*10 Pack* ..... **11-2387**

**30.** Float ..... **11-2187**

**31.** Float pin *(each)* ..... **11-2369**
*5 pack* ..... **11-2370±**

**32.** Bowl screw
10-24 x ¾" - *Three required (each)* ..... **50-0034**
*10 Pack* ..... **50-0063**
10-24 x 2⅜" - *One required (each)* ..... **50-0040**
*10 Pack* ..... **50-0061**

**33.** Carb bowl *(only)* ..... **11-2388±**
Carb bowl complete assembly ..... **11-2388P**

**34.** Bowl plug *(each)* ..... **11-2090**
*5 pack* ..... **11-2092±**

**35.** Seat o-ring* *(required with part #11-2465 only when replaces 360° style fuel inlet.)*
*each* ..... **50-8009**
*10 Pack* ..... **50-8095**

**36.** Needle
1⅞" Super E & 2¹⁄₁₆" Super G ..... **11-2195±**
Racing only ..... **11-2197±**

**37.** Seat - Includes O-ring #35
*(Replaces obsolete seats 11-2347 and 11-2348)*
**a.** 1⅞" E & 2¹⁄₁₆" G *(Uses part #11-2195± needle)* ..... **11-2465**
**b.** Racing only *(Uses part #11-2197± needle)* ..... **N/A**
**c.** Racing only -threaded fuel inlet *(6AN .157" ID)*
*(Uses part #11-2195± needle)* ..... **11-2395**
**d.** Permeation Compliant fuel inlet seat Super E or G
*(Uses part #11-2195± needle)* ..... **106-2011**

**38.** Ejector nozzle o-ring *(each)* ..... **50-8011**
*10 Pack* ..... **50-8096**

**39.** Pump pushrod *(each)* ..... **11-2373**
*5 pack* ..... **11-2393**

**40.** Check ball - *(two required) (each)* ..... **50-8090**
*10 Pack* ..... **50-8125**

**41.** Check ball spring *(each)* ..... **11-2374**
*5 pack* ..... **11-2392**

**42.** Pump cap o-ring - *(two required) (each)* ..... **50-8012**
*10 Pack* ..... **50-8100**

**43.** Pump cap assembly ..... **11-2389**

**44.** Overflow hose per 24" *27369-76 (each)* ..... **19-0262-S**
*5 pack* ..... **19-0263**

**45.** Pump cap screw 8-32 - *(two required) (each)* ..... **50-0042**
*10 Pack* ..... **50-0098**

**46.** Diaphram spring *(each)* ..... **11-2275**
*10 Pack* ..... **11-2278**

**47.** Diaphragm ..... **11-2282**

**48.** Gasket, backplate *(each)* ..... **106-1724**
*10 Pack* ..... **106-2328**

**49.** Enrichment device *(Use with air horn only)* ..... **11-2084±**

**50.** Fuel line"
**a.** Fuel line With 90° bend*19" *(Use with part #11-2465)* ..... **N/A**
**b.** Permeation Compliant straight, 311" x .563" x 17.5"
*(Use with part #106-2011 , 90° seat)* ..... **190-0001**

**51.** Fuel line insulator – 12" USA 1,2,3 ..... **19-0172**

**52.** Spacer, Kit, w/O-ring
1⅞" x 1" ..... **16-0057***
2¹⁄₁₆" x 1" ..... **16-0357***
2¼" x 1" ..... **16-0157***
*Use with 1" Spacer Block ..... **16-0058**

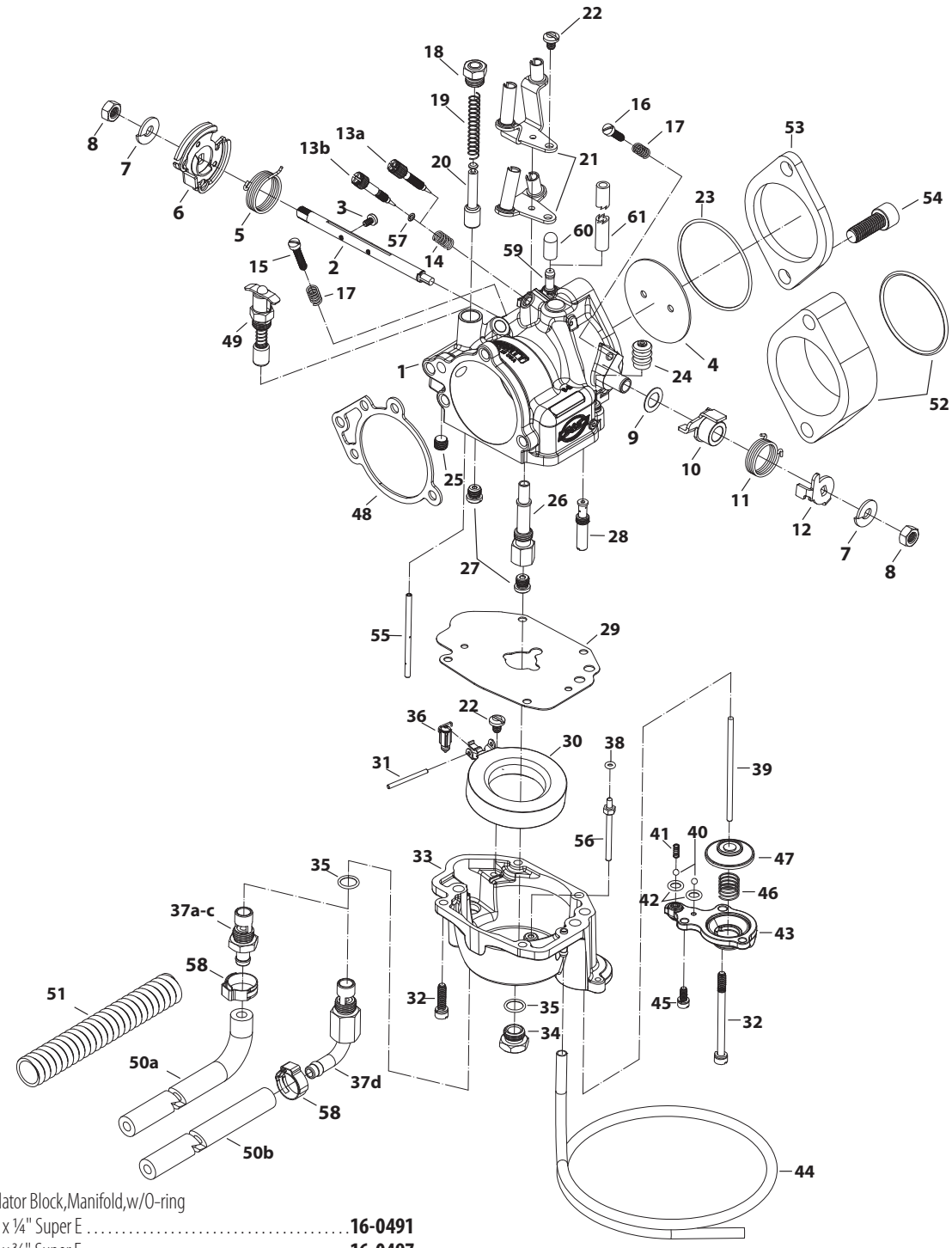


**53.** Insulator Block,Manifold,w/O-ring
- 1⅞" x ¼" Super E ..... **16-0491**
- 1⅞" x ⅜" Super E ..... **16-0497**
- 2⅛" x ¼" Super G ..... **16-0492**
- 2⅛" x ⅜" Super G ..... **16-0498**
- 2¼" x ¼" Super D ..... **16-0499**

**54.** Screw
- 1" x ⅜"-16 *(each)* ..... **50-0161**
- 1¼" x ⅜"-16 *(each)* ..... **50-0162**
- *10 Pack* ..... **50-0177**
- 1⅜" x ⅜"-16 *(each)* ..... **50-0163**
- *5 pack* ..... **50-0178**
- 2" x ⅜"-16 *(each)* ..... **50-0164**
- *5 pack* ..... **50-0185**

**55.** Tube,Fast Idle Pick-Up,Super E/G,.125" x 2.350",Brass ..... **0381F**±

**56.** Tube,Ejector Nozzle,Super E/G,Flared,Brass ..... **106-6124**±

**57.** O-ring, 3mm x 5mm x 1mm *(each)* ..... **500-0036**
- *10 Pack* ..... **500-0148**

**58.** Clamp, ⅝" - ⅞" ..... **50-8002**

**59.** Hose, Fitting straight, .040" ..... **16-0134**

**60.** VOES Fitting Cap ..... **50-8372**

**61.** VOES/Oil Return Hose ..... **19-0395**

± ⚠ WARNING: Cancer and Reproductive Harm – www.P65Warnings.ca.gov

**360° banjo style fuel inlet fitting used on early S&S E&G carbs is no longer available. Replace with one of the inlet/seat fittings listed under #37 on this page. We highly recommend inlet/seat #106-2011.*

→ CARBURETOR REBUILD KITS **PAGE 60**

# SINGLE BORE EFI THROTTLE BODY & RELATED REPLACEMENT PARTS

**1.** Throttle body
52mm 1995-'99 ..... **16-5101**
58mm 1995-'99 ..... **106-3954**
**2.** Cap, canister purge *(each)* ..... **50-8266-S**
**3.** Manifold (See PAGE 57)
**4.** Cap, rubber, manifold, fitting ..... **50-8372**
**5.** Throttle cable guide packet with hardware ..... **55-5084**
**6.** Screw, cable guide & air cleaner backplate *(each)* ..... **50-0041**
*10 Pack* ..... **50-0062**
**7.** O-ring, throttle body to manifold ..... **50-7967-S**
**8.** Intake air temperature sensor packet with hardware
*27270-95* ..... **55-5041**±
**9.** Gasket, IAT ..... **16-5009-S**
**10.** Screw, M3, IAT ..... **50-0357-S**
**11.** Idle air control motor SS EFI packet with hardware - 1995-'99
*27628-01, 27628-01A* ..... **55-5085**±
**12.** O-ring, IAC ..... **50-8149-S**
**13.** Screw, 10-24, IAC, 1995-'99
*each* ..... **50-0356-S**
**14.** Fuel rail kit
1995-'99 *(Fuel inlet tube included) (N/S)* ..... **16-5207**
**15.** Screw, rail, 1995-'99 *(each)* ..... **50-0039**
*10 Pack* ..... **50-0146**
**16.** Fuel injector
*1 pack* ..... **55-5052A**
*2 pack* ..... **55-5052**
**17.** O-ring, injector top, black ..... **50-8264-S**
**18.** O-ring, injector bottom, orange ..... **50-8265-S**
**20.** Screw, TP sensor & fuel rail *(each)* ..... **50-0358-S**
**23.** Screw, throttle body to manifold *(each)* ..... **50-0359-S**
**24.** Washer, lock, .200" x .334" x .047", Stainless Steel
Throttle body to manifold ..... **50-7000**
**25.** Gasket, backplate
52mm *(each)* ..... **106-1724**
*10 Pack* ..... **106-2328**
58mm *(each)* ..... **106-4662**
**26.** Harness, injector adapter kit, 1995-'99 ..... **55-5074**
**27.** Pressure regulator, 1995-'99 ..... **16-5297**
**28.** Screw, pressure regulator, 6-32 x 3⁄16", 1995-'99 ..... **50-0279-S**
**29.** Clamps, Hose, ½" diameter, smooth, 1995-'99 ..... **50-8352**
**30.** Plug, assembly, MAP sensor hole, 1995-'99 (N/S) ..... **50-8350**
**31.** O-ring, MAP plug, 1995-'99 (N/S) *(each)* ..... **50-8133-S**

**(N/S)= Not Shown**

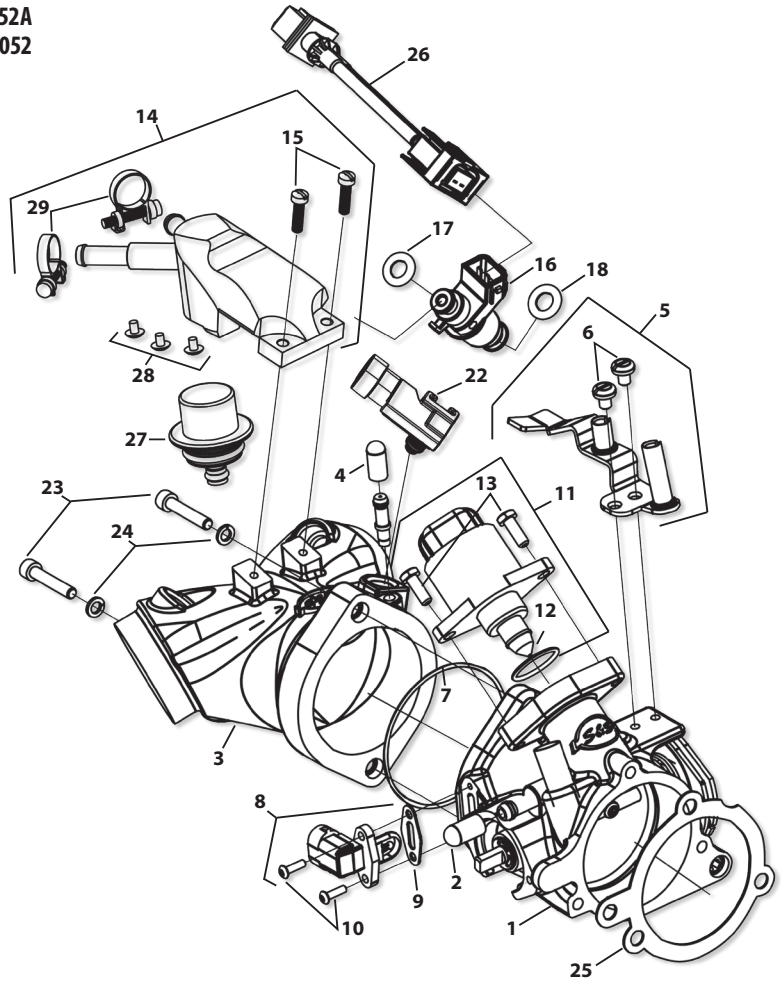


±⚠ WARNING: Cancer and Reproductive Harm – www.P65Warnings.ca.gov

*All reference to HD® Part #s is for identification purposes only. We in no way are implying that any of S&S® Cycle's products are original equipment parts or that they are equivalent to the corresponding HD Part # shown.*

# Mk45 4.5" MUFFLER REPLACEMENT PARTS

**1.** 4.5" Muffler Assembly
Left, Chrome ..... **551-0020**±
Right, Chrome ..... **551-0021**±
Left, Black ..... **551-0022**
Right, Black ..... **551-0023**
**2.** Endcap
Thruster, Chrome ..... **550-0634A**±
Thruster, Highlighted Machined ..... **550-0629A**
Tracer, Chrome ..... **550-0636A**±
Tracer, Highlighted Machined ..... **550-0632A**
**3.** Main Baffle Assembly, 4.5" Muffler ..... **551-0007**
**4.** dB reducer ..... **551-0026**
**5.** Insulation, 4.5" Muffler ..... **551-0003**
**6.** Button Head Cap Screw, Stainless, ¼"-20X⅜" ..... **500-0441**
**7.** Hardware Kit, Muffler Clamps And Screws (N/S) ..... **551-0027**

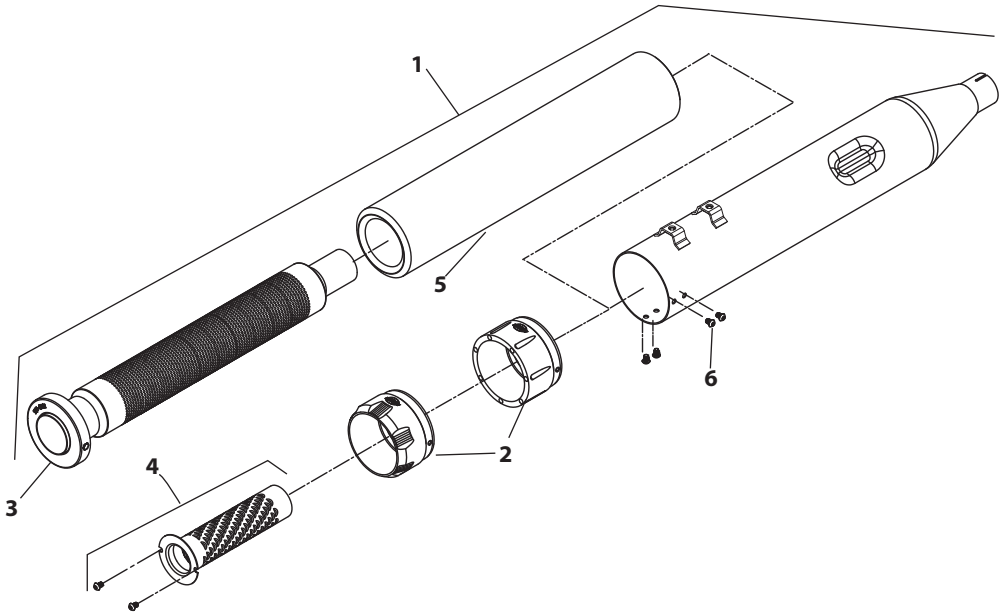


± WARNING: Cancer and Reproductive Harm – www.P65Warnings.ca.gov

# SIDEWINDER® 2:1 EXHAUST REPLACEMENT PARTS

1. Header,Assembly,2 into 1,Sidewinder¨,Weldment, 1995-'16 Touring Modelss ..... **551-0705**
2. Muffler, Street Legal
   - Chrome ..... **551-0529A±**
   - Black ..... **551-0530A±**
3. Collector, heat shield,
   - Chrome ..... **551-0379±**
   - Black ..... **551-0381±**
4. Heat shield, front, 2:1, Sidewinder®, chrome, 1995-'16 touring models
   - Chrome ..... **551-0709±**
   - Black ..... **551-0715±**
5. Heat shield, rear, 2:1, Sidewinder®, chrome, 1995-2016 touring models
   - Chrome ..... **551-0712±**
   - Black ..... **551-0717±**
6. Clamp, header mount, 2:1, chrome plate, mild steel, 11 gauge, M8 2017 touring ..... **551-0361**
7. Clamp, muffler, band style, 2.5" ..... **551-0135**
8. Clamp, hose, worm drive, SAE #20 (qty. 3) ..... **551-0527**
9. Clamp, hose, worm drive, SAE #40 ..... **551-0402**
10. Clamp, hose, worm drive, SAE #24 (qty. 3) ..... **500-0791**
11. Adapter, oxygen sensor, 12mm to 18mm, stainless steel . **550-0375**
12. Gasket, exhaust, tapered, stainless steel, 1984-up bt, 1986-up xl *65324-83B, 65324-83A* ..... **106-5029**
13. Bracket, header mount, 2:1, powdercoated, black, 2007-'16 touring models ..... **551-0719**
14. Bracket, header mount, 2:1, powdercoated, black, 1995-'06 touring ..... **551-0786**
15. Bolt, carriage, 5/16-18 x 3/4" ..... **500-0555**
16. Nut, HSFH, 5/16-18 unc-2b x .283", Zinc, steel ..... **50-5053-S**
17. Nut, HSFH, 5/16-24 unf-2b x .283", Zinc, steel *7593* ..... **50-5025-S**
18. Washer, Spacer, Floor Board ..... **551-0400**
19. Spacer, floor board, powdercoated, black ..... **551-0399**
20. Screw, shc, 3/8-16 x 1-3/4", zinc, steel ..... **500-0789**
21. Screw, shc, 3/8-16 x 2-3/4", zinc, steel ..... **500-0790**
22. Screw, hh, flg, serrated, 5/16-18 x 1/2" ..... **500-0744**
23. dB reducer ..... **551-0026**

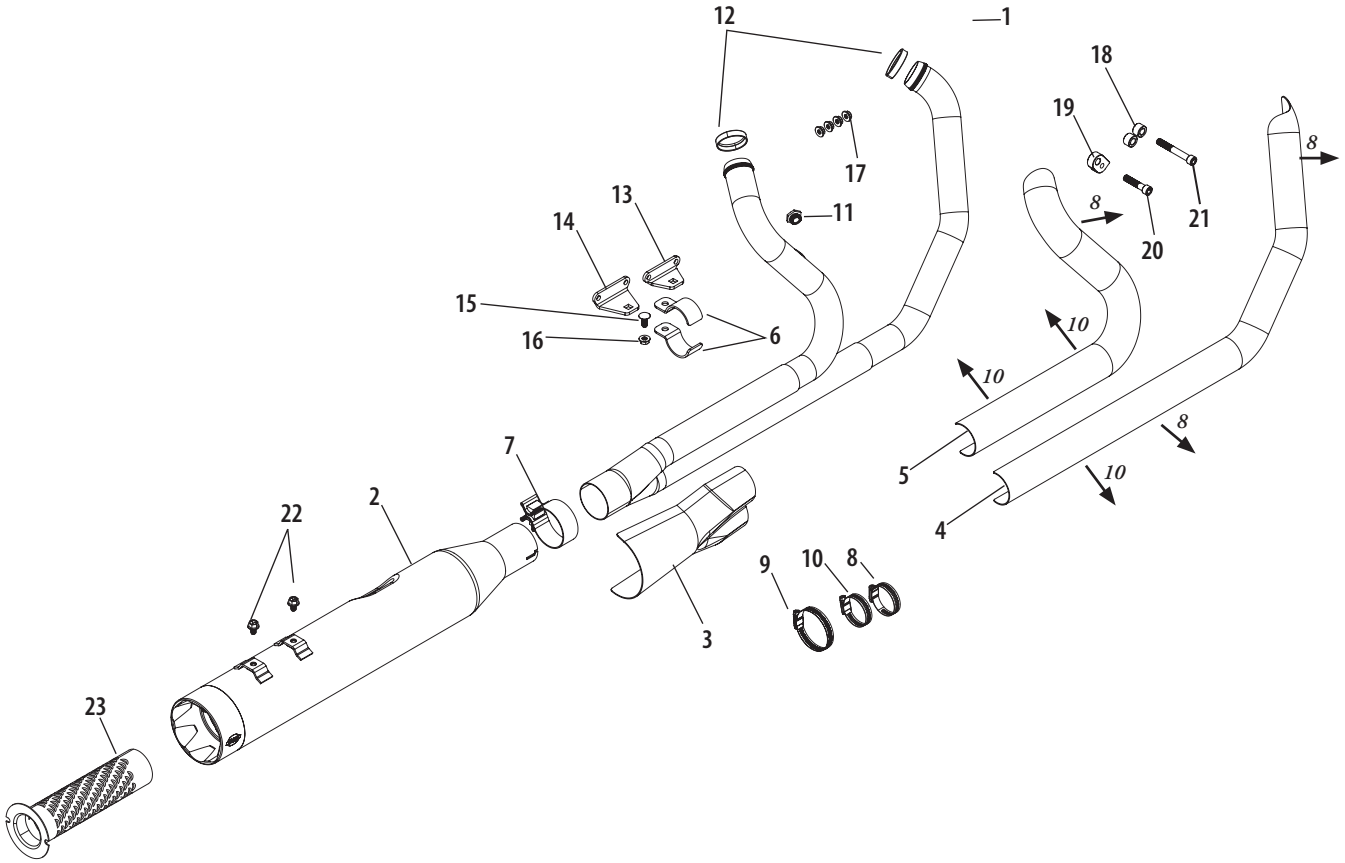


± ⚠ WARNING: Cancer and Reproductive Harm – www.P65Warnings.ca.gov

# SHADOW PIPE REPLACEMENT PARTS

1. Tube, crossover, power tune dual, Weldment, 1995-2008 Touring (1 Req) ..... **551-0077**
2. Shield, left, power tune dual, 1995-2016 Touring (1 Req)
   Chrome ..... **551-0115**
   Black ..... **551-0116**
3. Bracket,Assembly,Transmission,Pan, Power Tune Dual, 1995-2008 Touring (1 Req) ..... **551-0126**
4. Screw,SHC,1/4-20 x 17/8",Zinc Plated (4 Req) ..... **500-0641**
5. Bolt, carriage, 5/16"-18 x 3/4" ..... **500-0555**
6. Clamp,P-Style,Crossover,Power Tune Dual Header, 1995-2008 Touring (1 Req) ..... **551-0120**
7. Nut, Flanged, Serrated, 5/16"-18 (2 Req) ..... **50-5053-S**
8. Clamp,Hose,Worm Drive, #20 (2 Req) ..... **551-0527**
9. Band style clamp ..... **551-0028**

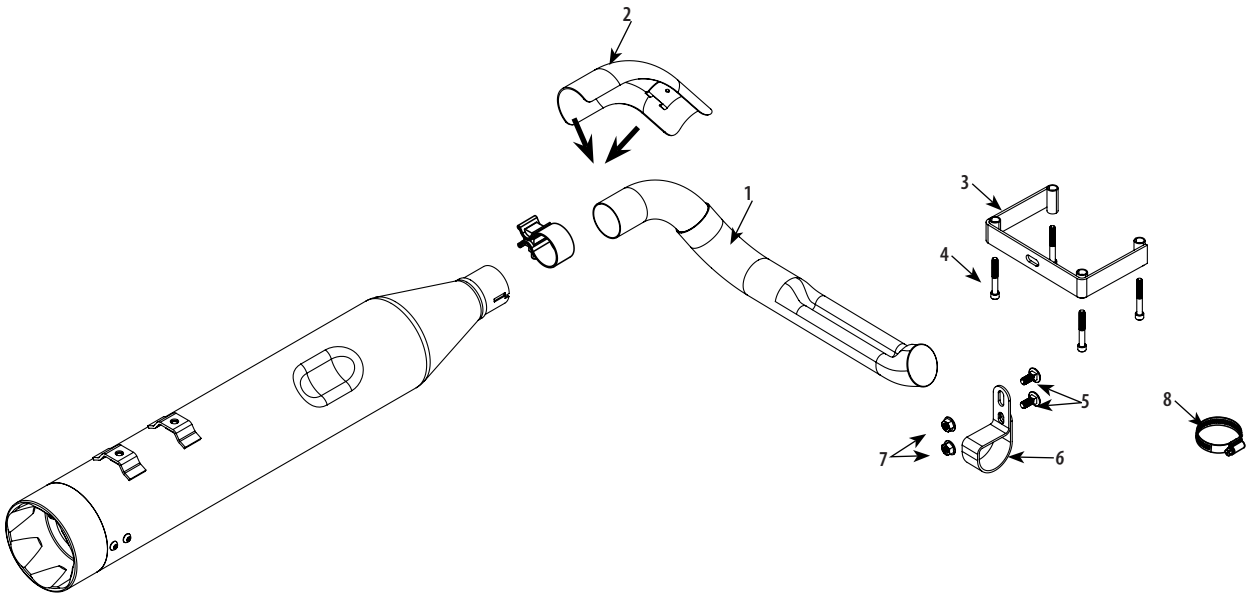


**NOTE: Install #5 heat shield clamps with screw heads pointing in direction shown by arrows.** →

# SLASH CUT REPLACEMENT PARTS FOR DYNA® MODELS

1. Slash Cut Muffler Assembly, Front or Rear
   Chrome ..... **551-0308**
   Black ..... **551-0311**
2. Main Baffle Assembly ..... **551-0301**
3. dB Reducer Baffle ..... **551-0350**
4. Button head cap screw, Stainless, ¼"-20x3/8"
   (Hold Main baffle assy to muffler shell) ..... **500-0441**
5. Socket head cap screw, Stainless, 10-32x3/8"
   (Hold db killer baffle to main baffle assy) ..... **500-0570**

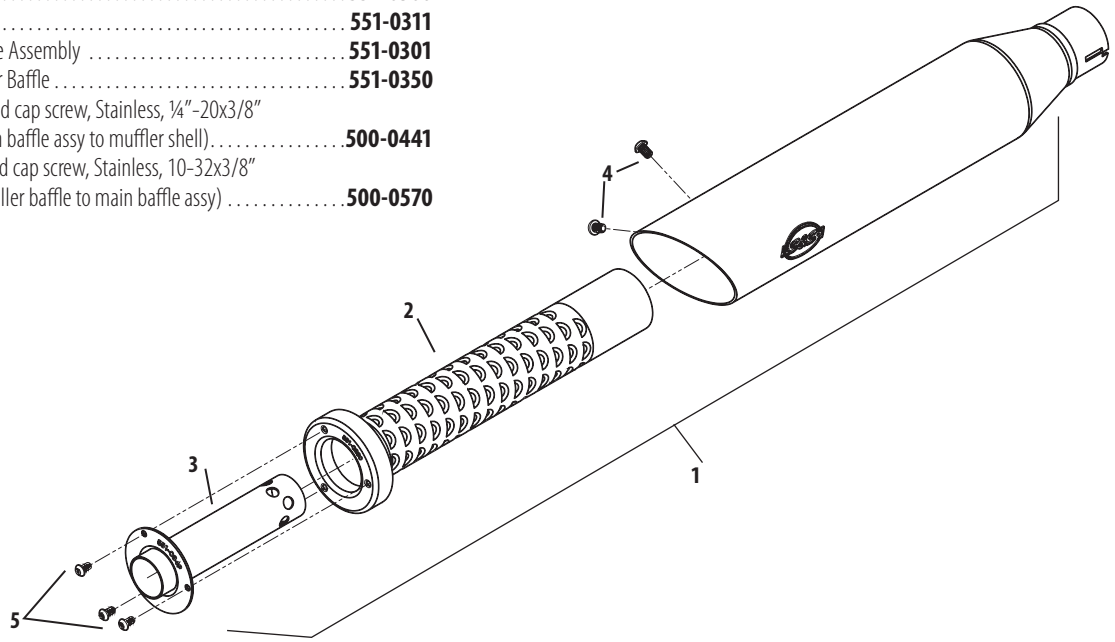


# GRAND NATIONAL® REPLACEMENT PARTS FOR DYNA® MODELS

1. Muffler Assembly Front or Rear
   Grand National, Chrome ..... **551-0314**
   Grand National, Black ..... **551-0317**
2. End Cap ..... **551-0292**
3. Main Baffle Assembly ..... **551-0299**
4. dB Reducer Baffle ..... **551-0304**
5. Button head cap screw, Stainless, ¼"-20x3/8"
   (Hold Main baffle assy to muffler shell) ..... **500-0441**
6. Socket head cap screw, Stainless, 10-32x3/4"
   (Hold End Cap to main baffle assy) ..... **500-0569**
7. Insulation, Muffler, Pillow Pack ..... **551-0305**

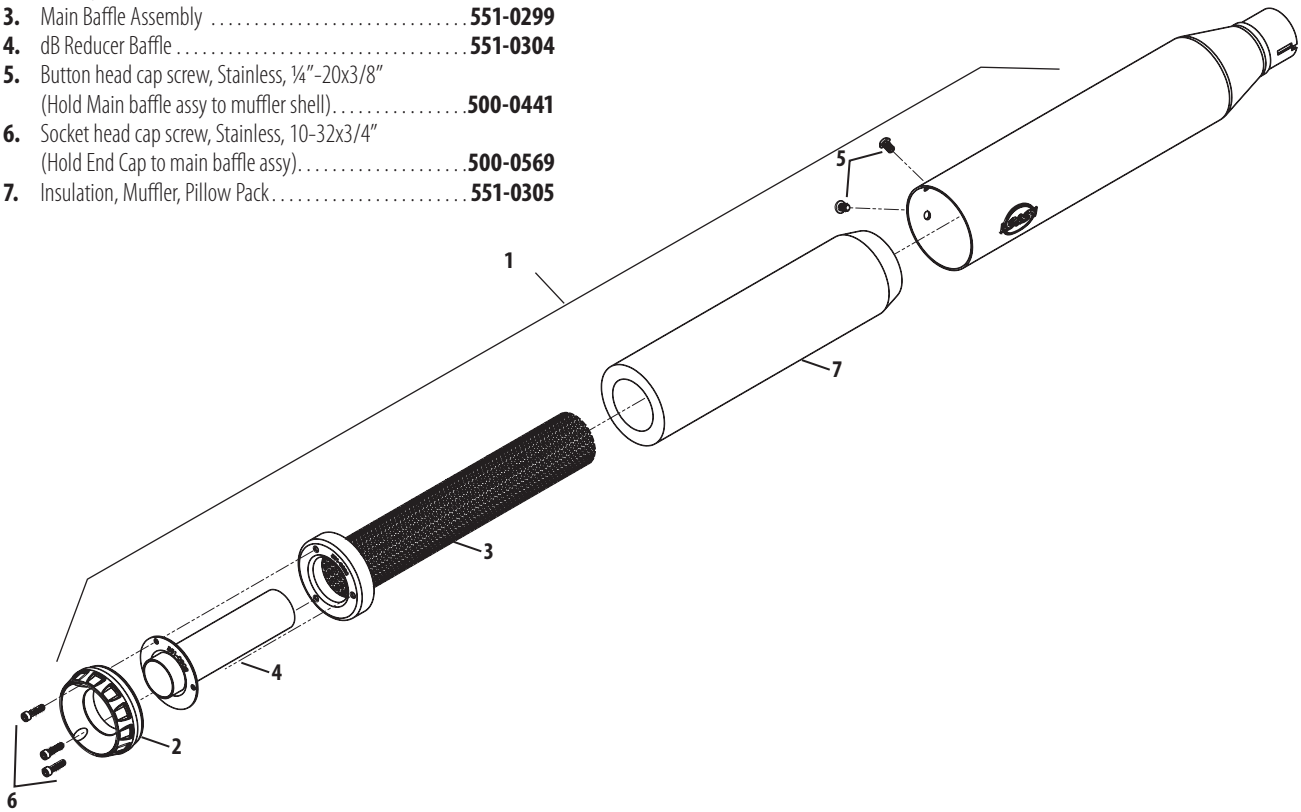


±⚠ WARNING: Cancer and Reproductive Harm – www.P65Warnings.ca.gov

# GRAND NATIONAL® 4" REPLACEMENT PARTS

**1.** 4" Muffler assembly with Grand National endcap
- Left, Chrome. . . . . **551-0055**±
- Right, Chrome . . . . . **551-0056**±
- Left, Black. . . . . **551-0057**
- Right, Black . . . . . **551-0058**

**3.** Endcap (Left and Right) . . . . . **551-0291**
**4.** Main baffle assembly (Left and Right) . . . . . **551-0053**
**5.** dB reducer baffle (Left and Right). . . . . **551-0063**
**6.** Button head cap screw, Stainless, ¼"-20x⅜" . . . . . **500-0441**
**7.** Socket head cap screw, Stainless, 10-32x¾" . . . . . **500-0569**
**9.** Hardware kit, muffler clamps and screws (N/S) . . . . . **551-0027**

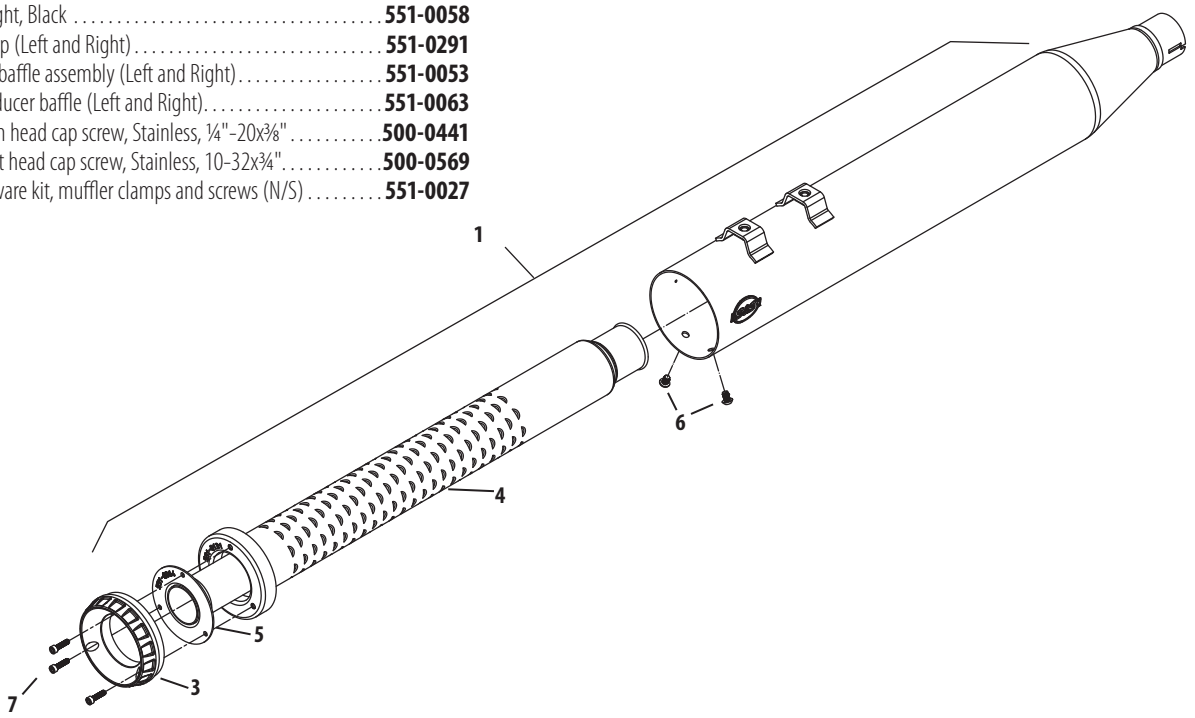


# SLASH CUT 4" REPLACEMENT PARTS

**2.** 4" Muffler assembly Slash Down
- Left, Chrome. . . . . **551-0059**±
- Right, Chrome . . . . . **551-0060**±
- Left, Black. . . . . **551-0061**
- Right, Black . . . . . **551-0062**

**4.** Main baffle assembly (Left and Right) . . . . . **551-0053**
**5.** dB reducer baffle (Left and Right). . . . . **551-0063**
**6.** Button head cap screw, Stainless, 1/4"-20x3/8" . . . . . **500-0441**
**8.** Button head cap screw, Stainless, 10-32x3/8" . . . . . **500-0570**
**9.** Hardware kit, muffler clamps and screws (N/S) . . . . . **551-0027**

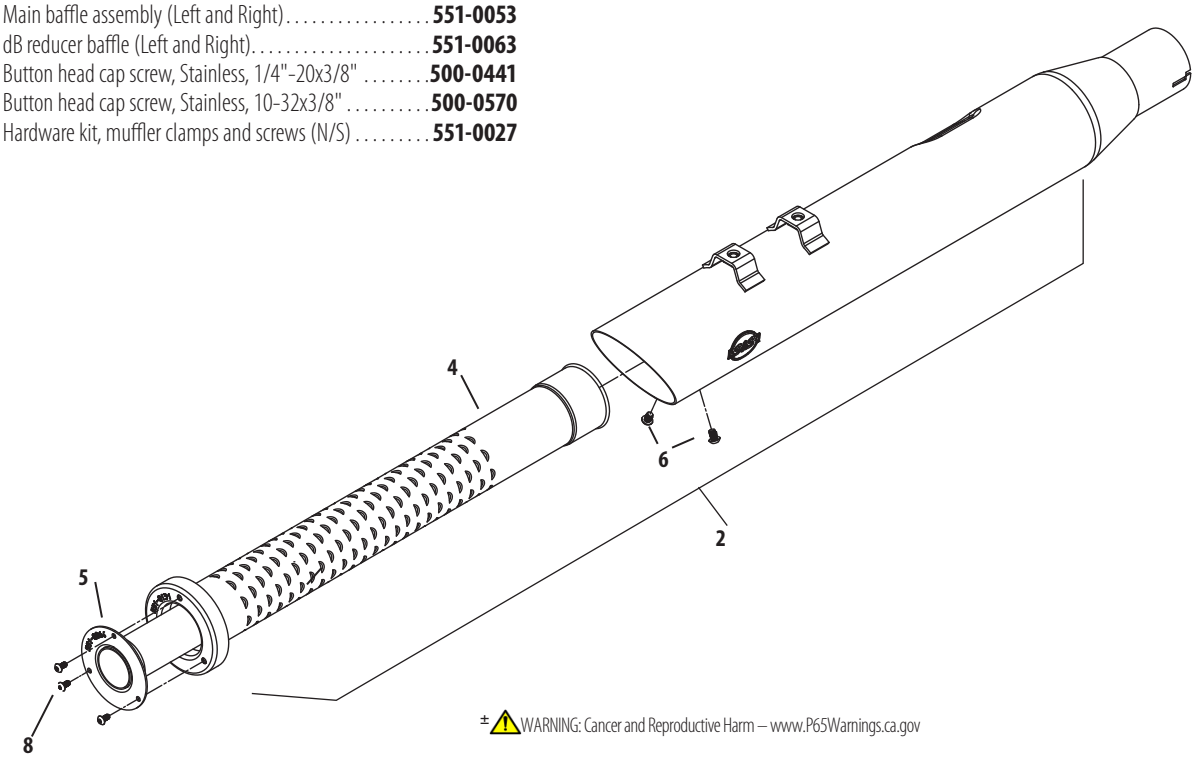


± ⚠ WARNING: Cancer and Reproductive Harm – www.P65Warnings.ca.gov

# POWER TUNE® DUAL HEADER REPLACEMENT PARTS

1. Pipe,Header,Power Tune Dual, Weldment,1999-2008 Touring *(1 Req)* ..... **551-0083**
2. Tube,Crossover,Power Tune Dual,Weldment, 1995-2008 Touring *(1 Req)* ..... **551-0077**
3. Shield,Front,Power Tune Dual,1995-2008 Touring *(1 Req)*
   - Chrome ..... **551-0091±**
   - Black ..... **551-0092**
4. Shield,Rear,Power Tune Dual,1995-2016 Touring *(1 Req)*
   - Chrome ..... **551-0103±**
   - Black ..... **551-0104**
5. Shield,Left,Power Tune Dual, 1995-2016 Touring *(1 Req)*
   - Chrome ..... **551-0115±**
   - Black ..... **551-0116**
6. Gasket,Exhaust,Tapered,Stainless Steel, 1984-up bt, 1986-up xl *65324-83B, 65324-83A (2 Req)* ..... **106-5029**
7. Plug,M18 x 1.5 Thread *(2 Req)* ..... **551-0122**
8. Bolt,Carriage,⅜-16 x 1¼" *(1 Req)* ..... **500-0553**
9. Bracket,Transmission,Side,Power Tune Duals, 1995-2008 Touring *(1 Req)* ..... **551-0125**
10. Clamp,P-Style,Power Tune Dual,Side, 1995-2016 Touring *(1 Req)* ..... **551-0119**
11. Nut,Flanged,Serrated,⅜-16 *(1 Req)* ..... **500-0554**
12. Bracket,Assembly,Transmission,Pan, Power Tune Dual,1995-2008 Touring *(1 Req)* ..... **551-0126**
13. Screw,SHC,¼-20 x 1⅞",Zinc Plated *(4 Req)* ..... **500-0641**
14. Bolt,Carriage, 5⁄16-18 x ¾" *(2 Req)* ..... **500-0555**
15. Clamp,P-Style,Crossover, Power Tune Dual Header,1995-2008 Touring *(1 Req)* ..... **551-0120**
16. Nut, Flanged, Serrated, 5⁄16"-18 *(2 Req)* ..... **50-5053-S**
17. Clamp,Muffler,Band Style *(1 Req)* ..... **551-0028**
18. Clamp,Hose,Worm Drive,SAE #28 *(8 Req)* ..... **551-0124**
19. Nut, HSFH,5/16-24 *7593* ..... **50-5025-S**

± ⚠ WARNING: Cancer and Reproductive Harm – www.P65Warnings.ca.gov

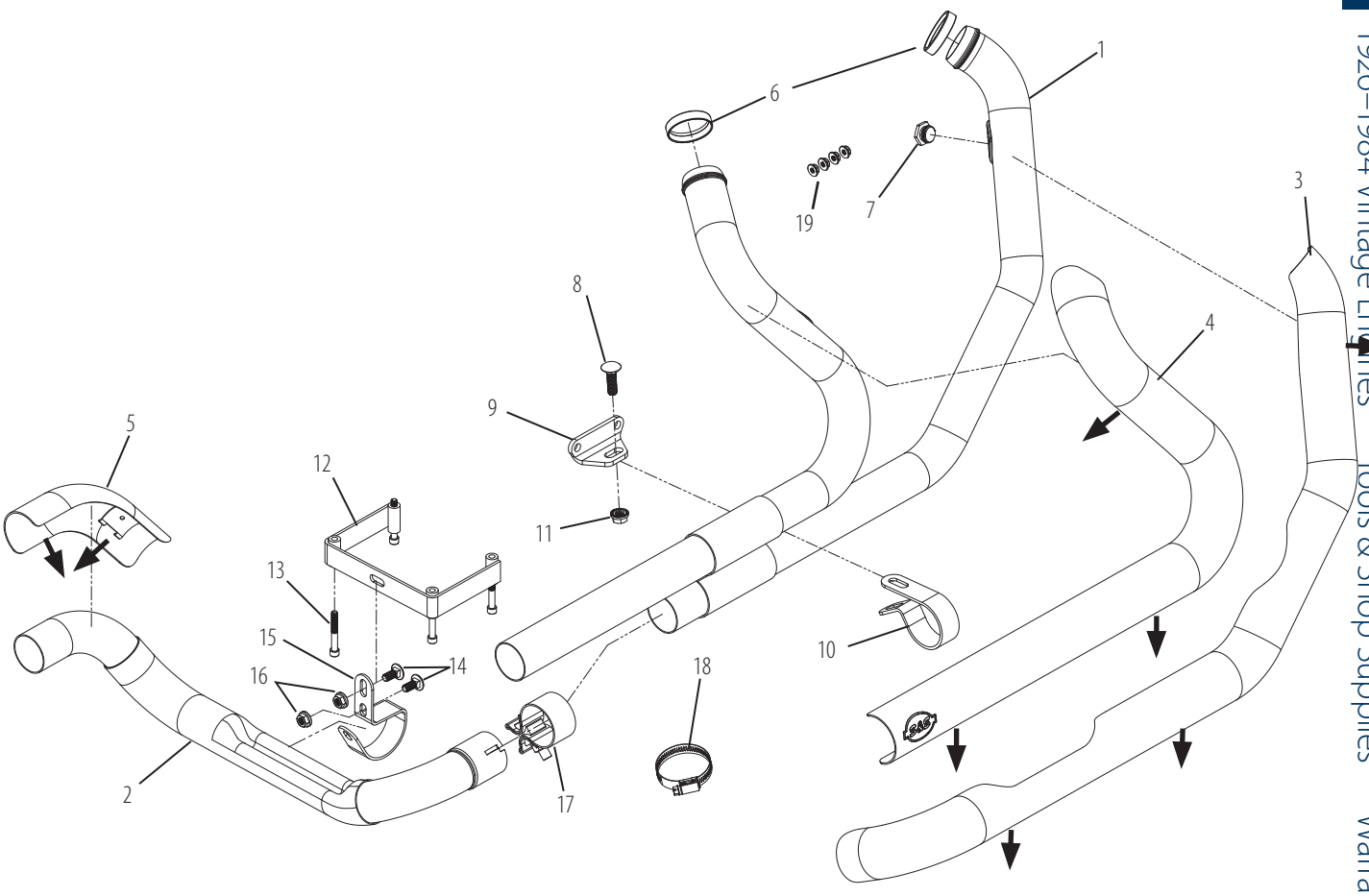


NOTE - Install #18 heat shield clamps with screw heads pointing in direction shown by arrows. →

# TRANSMISSION CASES REPLACEMENT PARTS
## FOR 1986–'99 SOFTAIL® MODELS

**1.** Transmission case assembly, 5-speed, rigid mount 1986-'99 Harley-Davidson® Softail® ..... **N/A**
**2.** Case only ..... **N/A**
**3.** Screw, socket buttonhead, ¼"-20 x ½" ..... **50-0065**
**4.** Set-screw, sockethead, ½"-20 x ½" *(HD® #3784)* ..... **50-0203**
**5.** Nut, hex head, 7/16"-14 *(each)* ..... **50-5044**
**6.** Pin, dowel, .308" diameter x .70" *375* ..... **50-8029**
**7.** Stud, ⅜"-24, 7/16"-14 x 1.300" *11733A* ..... **50-8084**
**8.** Pin, dowel, 5/16" diameter x 1" *337* ..... **50-8171**
**9.** Pin, roll, ⅜" x .300" *609* ..... **50-8173**
**10.** Screw, shift lever adjustment *33119-79B* ..... **56-1002**
**11.** Cover, speedo sensor hole ..... **56-1061**
**12.** Gasket, speedo sensor hole cover ..... **N/A**
**13.** Guide, shifter shaft, 5-speed rigid mount 1986-'99 BT *33114-79* ..... **56-1067**
**14.** Ring, internal retaining, 3.734" O.D. x .109" tru-arc *11161, 11599* ..... **50-8051**
**15.** Seal, oil - 1984-'99 BT *12045* ..... **56-1064**
**16.** Bearing, transmission output shaft, 1984-'99 BT *8996A* ..... **56-1280**
**17.** Bearing, transmission countershaft *8977* ..... **56-3031**
**18.** Seal, oil *12067B* ..... **56-3033**
**19.** Door assembly, transmission access, 5-speed 1986-'99 BT ..... **56-1027**
**20.** Capscrew, sockethead ¼"-20 x 1¼" *4740A, 3482A each* ..... **50-0008**
**21.** Capscrew, SH 5/16"-18 x 1¼" *3210A* ..... **50-0121**
**22.** Washer, flat - ¼" x 7/16" x 1/16" *(each)* ..... **50-7017**
*12 pack* ..... **50-7013**
**23.** Washer, flat - 5/16" x .545" x.042" *(each)* ..... **50-7026**
**24.** Ring, internal retaining, 2.072" O.D. x .062" Tru-Arc *35021-89* ..... **50-8053**
**25.** Pin, roll - 5/16" x ¾" *634 (each)* ..... **50-8175**
**26.** Plug, magnetic - ⅛" -27 *739A* ..... **50-8334**
**27.** Door, transmission access *35258-87C* Only 5-speed rigid mount 1986-'99 BT ..... **56-1025**
**28.** Gasket, transmission access door *35652-79B, 35653-98A* ..... **56-1026**
**29.** Bearing, transmission access door *8992A, 8998* ..... **56-3026**
**30.** O-ring, Quad Seal *11165* ..... **50-8045**

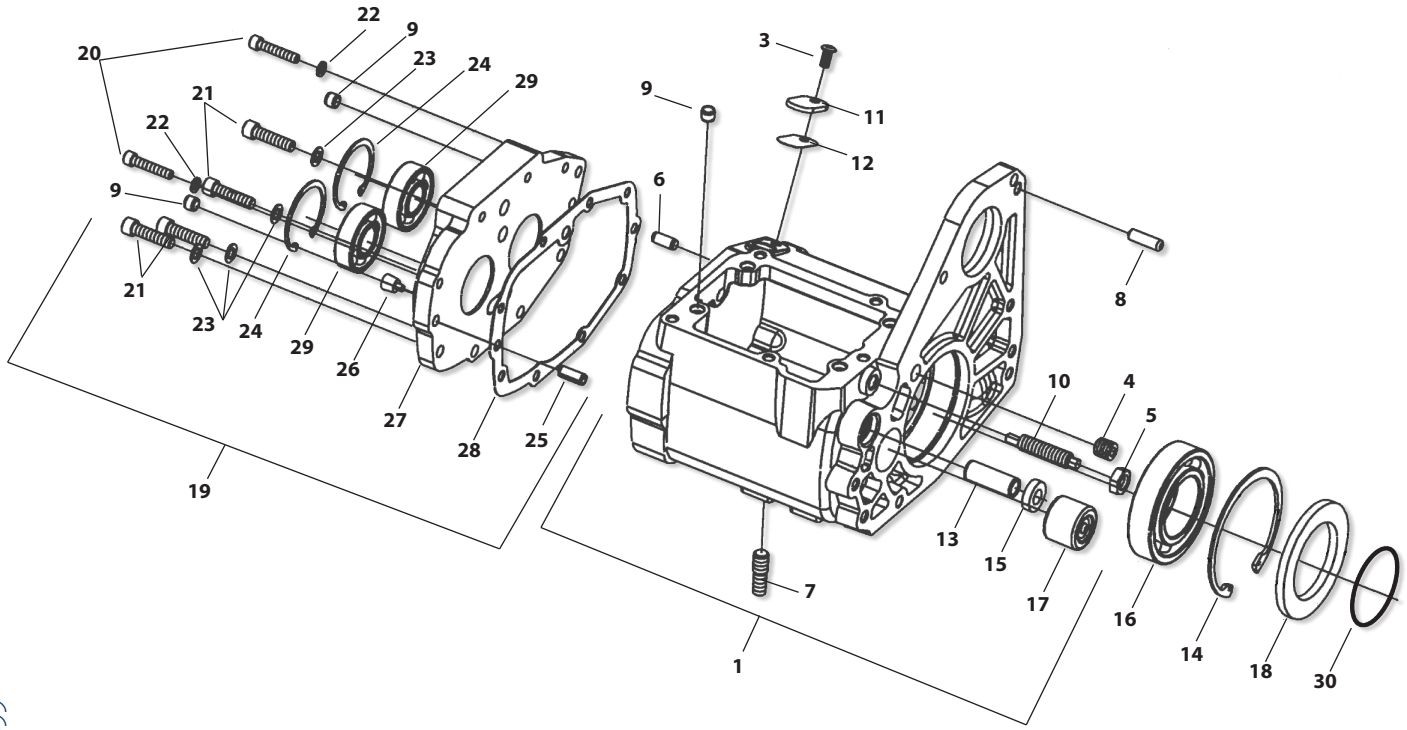


*All reference to HD® Part #s is for identification purposes only. We in no way are implying that any of S&S® Cycle's products are original equipment parts or that they are equivalent to the corresponding HD Part # shown.*

# 1926–'84 VINTAGE MODELS





**PERFORMANCE KITS**

84", 86", 88" Stock Bore Stroker Kit ..... 115
84" Stroker Hot Set Up Kit ..... 118
93" Sidewinder Hot Set Up Kit ..... 118
Performance Kit Overview ..... 114
Retro Conversion Kit ..... 117
Sidewinder Big Bore Kit ..... 114
Stock Bore Stroker Kit ..... 116
Top End Replacement ..... 119

**PERFORMANCE ENGINES**

KN-Series ..... 124
P-Series ..... 123
SH-Series ..... 122

**PERFORMANCE PARTS**

Air Cleaner Kits ..... 112
Camshafts ..... 132
Carburetors ..... 165
Cylinder Heads ..... 147
Cylinders & Pistons ..... 141
Crankcases ..... 125
Electronics ..... 170
Flywheels ..... 126
Gaskets ..... 173
Gearcovers ..... 138
Manifolds ..... 162
Oil Pumps ..... 131
Pushrods ..... 152
Rocker Arms ..... 158
Rocker Covers ..... 160
Tappets ..... 151
Transmission ..... 171
Valve Springs ..... 157

**REPLACEMENT PARTS** ..... 176

# UNIVERSAL STEALTH AIR CLEANER KIT

## FOR 1936–'92 BIG TWINS AND 1957–'90 SPORTSTER® MODELS



### FITMENT

- 1936–'92 bt case breathing engines equipped with a Super E or G carb
- 1957–'03 Sportster® models case breathing engines equipped with a Super E or G carb

### FEATURES AND BENEFITS

- Increased performance
- Perfect addition with a performance exhaust system
- Filter element can be cleaned and reuse

### KIT CONTENTS

- Backplate
- Air Filter
- All necessary mounting hardware
- Complete instructions

**UNIVERSAL STEALTH AIR CLEANER KIT**

| Model | Part # |
|---|---|
| 1936–'92 big twins, 1957–'90 Sportster® models | **170-0176** |

DISCLAIMER: NOT LEGAL FOR SALE OR USE IN CALIFORNIA ON ANY POLLUTION CONTROLLED MOTOR VEHICLE. NOT LEGAL FOR SALE OR USE NATIONWIDE ON ANY FEDERAL POLLUTION CONTROLLED MOTOR VEHICLE UNDER THE CLEAN AIR ACT

# STEALTH AIR CLEANER KIT COVERS



NEW FOR 2020 FROM S&S CYCLE

**Stealth Tribute**





**Teardrop**

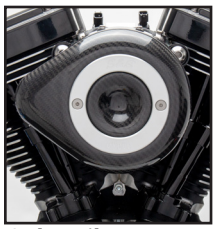

**Carbon Fiber**



**Mini in Gloss Black**



**Tri-Spoke**



**Torker**



**Air 1**



**Muscle in Chrome**



**Airstream in Chrome**

**STEALTH COVERS**

| NEW FOR 2020 Tribute | | Teardrop | | Teardrop—Slasher | | Carbon Fiber | Mini | |
|---|---|---|---|---|---|---|---|---|
| Chrome | Gloss Black | Chrome | Gloss Black | Chrome | Gloss Black | Black | Chrome | Gloss Black |
| **170-0592** | **170-0593** | **170-0530** | **170-0531** | **170-0532** | **170-0533** | **170-0501** | **170-0367** | **170-0366** |

| Tri-Spoke | Torker | Air 1 | Airstream | | Muscle | |
|---|---|---|---|---|---|---|
| Gloss Black w/Highlights | Gloss Black w/Highlights | Gloss Black w/Highlights | Chrome | Gloss Black | Chrome | Gloss Black with Highlighted Logo |
| **170-0210** | **170-0206** | **170-0214** | **170-0118** | **170-0396** | **170-0121** | **170-0463** |

| Displacement | | |
|---|---|---|
| 111 | 124 | 143 |
| **170-0319** | **170-0321** | **170-0323** |
| *$175.95* | *$175.95* | *$175.95* |

⚠WARNING: Cancer and Reproductive Harm – www.P65Warnings.ca.gov

# CLASSIC TEARDROP AIR CLEANER KITS
## FOR S&S AND STOCK CARBURETORS

### FITMENT
- 1966–'84 big twins
- 1966–'85 Harley-Davidson® Ironhead Sportster®

### FEATURES AND BENEFITS
- Increased air flow adds 2–5 horsepower *(more with performance exhaust and cams)*
- Easy installation
- S&S chrome teardrop air cleaner looks great

### KIT CONTENTS
- Chrome teardrop cover
- Backplate
- Filter
- Mounting hardware
- Instructions



**CLASSIC TEARDROP AIR CLEANER KITS±**

| Model Year and Engine Style | Super E & G |
|---|---|
| **Big Twin Models** | |
| 1966–'84 w/5 gl. tanks | **17-0440** |
| 1966–'84 | **17-0400** |
| **Harley-Davidson® Ironhead Sportster® Models** | |
| 1966–'85 | **17-0400** |

DISCLAIMER: NOT LEGAL FOR SALE OR USE IN CALIFORNIA ON ANY POLLUTION CONTROLLED MOTOR VEHICLE. NOT LEGAL FOR SALE OR USE NATIONWIDE ON ANY FEDERAL POLLUTION CONTROLLED MOTOR VEHICLE UNDER THE CLEAN AIR ACT

± ⚠ WARNING: Cancer and Reproductive Harm–www.P65Warnings.ca.gov

→ REPLACEMENT PARTS: SEE PAGE 200

**CLASSIC TEARDROP AIR CLEANER COVERS**

| Style | Finish | Part # |
|---|---|---|
| Mini | Chrome | **170-0367±** |
| | Gloss Black | **170-0366** |
| Classic Teardrop | Chrome | **17-0378±** |
| | Gloss Black | **170-0384A** |
| Slasher Teardrop | Chrome | **17-0004±** |
| | Gloss Black | **170-0419** |
| Nostalgic Teardrop | Polished | **17-0071** |

± ⚠ WARNING: Cancer and Reproductive Harm–www.P65Warnings.ca.gov



**170-0367±**



**170-0366**



**17-0378±**



**170-0384A**


**17-0004±**



**17-0071**

# PERFORMANCE KIT OVERVIEW FOR VINTAGE HARLEY-DAVIDSON® MODELS

### SIDEWINDER® BIG BORE KITS FOR 1966–'84 BIG TWINS

Sidewinder big bore/stroker kits are available in displacements from 88" to 103". The 3⅜" bore cylinders are coupled with strokes from 4¼" to 5" to yield the various displacements (See page 114). The most popular and highly recommended Sidewinder Kit is the 93" (3⅜" bore X 4½" stroke). This is also available as a Hot Set Up Kit which includes everything you need to achieve the potential of the increased displacement (See page 118).

### STOCK BORE STROKER KITS FOR 1936–'84 BIG TWINS AND IRONHEAD SPORTSTER®

Stock bore stroker kits were the original solution to attaining more cubic inches back in the day. They are still popular today because of they produce good power for less money. Stock bore strokers reuse most of the components of the stock engine, and don't require expensive crankcase machining so installation is also economical. Stroker kits are available for knuckles, pans, and shovels in 84" to 88" displacement. By far the 84" stroker is the most popular and is available as a Hot Set Up Kit. The Hot Set Up Kit comes with cam, carb pushrods, and valve springs that will allow you to take full advantage of the displacement increase (See page 115). There is a 74" stroker for Ironhead Sportster that has been a favorite since the 1970s (See page 116). Order the basic kit or configure your own Hot Set Up Kit with the CTO number.

### RETRO CONVERSION KIT FOR 1966–'84 BIG TWINS

Give your shovel the nostalgic look of a panhead, gain performance, and upgrade to modern 1984–'99 style hydraulic valve train with one simple to install kit. (See page 117)

### TOP END REPLACEMENT KITS FOR 1966–'84 BIG TWINS

Restore that tired iron with a bolt-on Top End Replacement kit. Kit includes cylinders, pistons, cylinder heads and all gaskets and hardware. Available for 74" and 80" engines. (See page 119)

# SIDEWINDER® BIG BORE KITS

## FOR 1966–'84 BIG TWIN ENGINES

### FITMENT

- 1966–'84 big twins

### FEATURES AND BENEFITS

- Increase displacement and power
- High strength cast iron cylinders with increased cooling fin area
- Stock like appearance—durable black powder coat finish
- Easy installation
- Long engine life, good dependability




**S&S® SIDEWINDER® BIG BORE KIT SPECIFICATIONS FOR 1966–'84 BIG TWINS**

| Displacement | Bore | Stroke | Compression Ratio | Cylinder Length | Recommended Cam (Stock Valve Train*) | Recommended Cam (S&S Valve Train**) | Recommended Carb |
|---|---|---|---|---|---|---|---|
| 88" | 3⅜" | 4¼" | 7.5:1 | 5.330" | S&S 514 | S&S 585 | Super E |
| 93" | 3⅜" | 4½" | 8.5:1 | 5.405" | S&S 514 | S&S 585 | Super E |
| 93" HC | 3⅜" | 4½" | 9.1:1 | 5.363" | S&S 560S | S&S 600 | Super E |
| 96" | 3⅜" | 4⅝" | 9.1:1 | 5.440" | S&S 560S | S&S 600 | Super E |
| 98" | 3⅜" | 4¾" | 8.9:1 | 5.530" | S&S 560S | S&S 600 | Super E |
| 103" | 3⅜" | 5" | 9.7:1 | 5.630" | S&S 560S | S&S 600 | Super E or G |

**1966–'84 style cams for valve train with stock style tappets* ***1984–'99 style cams for S&S valve train conversion kit with 1984-'99 style tappets*

**COMPLETE S&S® SIDEWINDER® KITS FOR SHOVELHEAD ENGINES**

| Displacement | 93" | 93" HC | 96" | 98" | 103" |
|---|---|---|---|---|---|
| 1970–'84 | **91-9126** | **91-9130** | **91-9134** | **91-9138** | **91-9140** |

DISCLAIMER: NOT LEGAL FOR SALE OR USE IN CALIFORNIA ON ANY POLLUTION CONTROLLED MOTOR VEHICLE. NOT LEGAL FOR SALE OR USE NATIONWIDE ON ANY FEDERAL POLLUTION CONTROLLED MOTOR VEHICLE UNDER THE CLEAN AIR ACT These kits require manifolds, see page 162.

# 84", 86", OR 88" STOCK BORE STROKER KIT

## FEATURES AND BENEFITS

- Increased displacement and power
- Economical—re-use most stock engine components
- Easy installation—like a stock engine rebuild
- Stock appearance

## OPTIONS

- Displacement 84", 86", or 88"
- Cylinder Bore 3⅞" or 3½"

Optional parts available—cam, prefit cylinder and piston kits, cylinder heads, S&S retro conversion kit *(pan style heads and upgraded valve train)*, and S&S valve train upgrade kit



32-2222



**S&S® STOCK BORE STROKER KIT SPECIFICATIONS 1936–'84 BIG TWINS**

| Displacement | Bore | Stroke | Compression Ratio | | Recommended Cam (Stock Valve Train) | Recommended Cam (S&S® Valve Train) | Recommended Carb |
|---|---|---|---|---|---|---|---|
| | | | HC | LC | | | |
| 84" | 3⅞" | 4½" | 8.4:1 | 7.3 | S&S 450S | S&S 513 | Super E |
| 86" | 3⅞" | 4⅝" | 9.4:1 | 8.1 | S&S 514 | S&S 585 | Super E |
| 88" | 3⅞" | 4¾" | 10.8:1 | 9.1 | S&S 565S | S&S 640 | Super E |

**STOCK BORE STROKER KITS FOR KNUCKLEHEAD, PANHEAD, & SHOVELHEAD ENGINES**

| Displacement | 84" | 86" | 88" |
|---|---|---|---|
| 1936–'53 | **32-2219** | – | – |
| 1958–'64† | **32-2220** | – | – |
| 1965–'69 | **32-2221** | – | – |
| 1970–'84 | **32-2222** | **32-2108** | **–** |
| Custom Flywheels | **32-2015** | **32-2015** | **32-2015** |

DISCLAIMER: NOT LEGAL FOR SALE OR USE IN CALIFORNIA ON ANY POLLUTION CONTROLLED MOTOR VEHICLE. Not legal for sale or use on any EPA pollution controlled motor vehicle..

*†S&S does not offer a pinion shaft for 1954–'57 engines.*

**THESE KITS REQUIRE SPECIAL S&S PISTONS. SEE CHART.**

**FORGED STOCK BORE STROKER PISTONS**

| Oversize | Standard | Low Compression |
|---|---|---|
| Standard (3⅞") | **106-5527** | **920-0073** |
| +.010" | **106-5528** | **920-0075** |
| +.020" | **106-5529** | **920-0077** |
| +.030" | **106-5530** | **920-0079** |
| +.040" | **106-5777** | **920-0081** |
| +.050" | **106-5778** | **920-0083** |
| +.060" | **106-5779** | **920-0085** |
| +.070" | **106-5780** | **920-0087** |
| +.080" | **106-5781** | **920-0089** |
| +.090" | **106-5782** | **920-0091** |



106-5527

# STOCK BORE STROKER KITS

## FOR 1971–'85 HARLEY-DAVIDSON® IRONHEAD SPORTSTER®

### FITMENT
- 1972–'85 1000cc Ironhead Sportster models

### FEATURES AND BENEFITS
- Economical—re-use most stock engine components
- More Power—longer stroke and larger displacement

### OPTIONS
- Piston oversize
- S&S Super B or Super E carburetor
- S&S pushrods

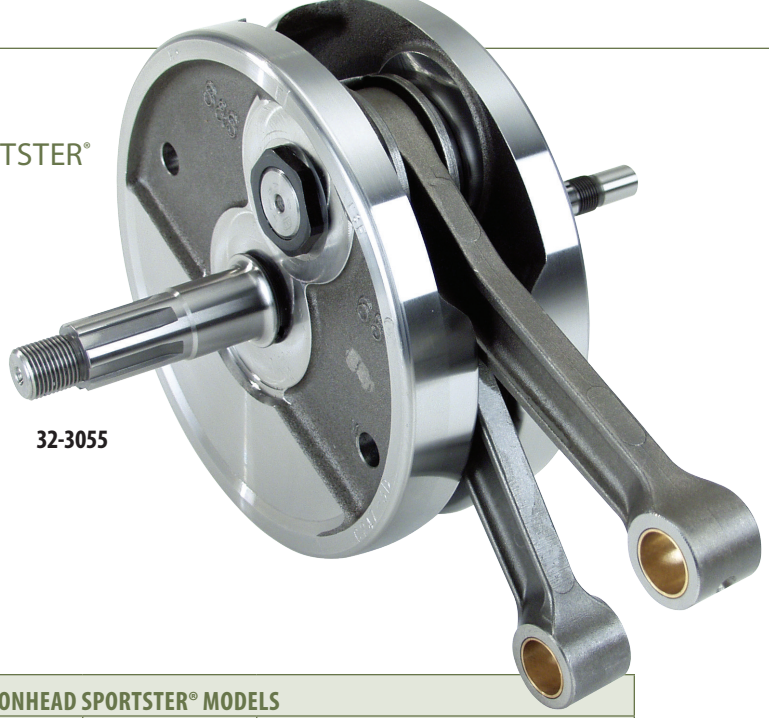

**32-3055**

**S&S® STOCK BORE STROKER KITS SPECIFICATIONS–HARLEY-DAVIDSON® IRONHEAD SPORTSTER® MODELS**

| Displacement | Stroke | Bore | Compression Ratio | Piston Type* | Cylinder Length | Application |
|---|---|---|---|---|---|---|
| 74" | 4⅝" | 3⅜₁₆" | 9:1 | Forged | Stock | Short Trips, Street, & Strip |

**Order pistons separately. See chart below.*

**STOCK BORE STROKER KITS FOR HARLEY-DAVIDSON® IRONHEAD SPORTSTER® MODELS**

| Year | Part # |
|---|---|
| 1977–'81 | **32-3055** |
| Custom Flywheels | **32-3014** |

*Note: Order pistons separately. See chart below. .*

**THESE KITS REQUIRE SPECIAL S&S PISTONS. SEE CHART.**

**106-5542**



**STROKER PISTON KITS FOR 1972–'85 HARLEY-DAVIDSON® SPORTSTER® MODELS**

| Oversize | +.010 | +.020 | +.030 | +.060 |
|---|---|---|---|---|
| Part # | **106-5542** | **106-5543** | **106-5544** | **106-5791** |

*Piston Deck Height = .806". Piston kits include rings, wristpins and keepers.* *Recommended Piston Fit: Close: .0030"-.0035" Loose: .0045"-.0055"*

***NOTES:*** For the best performance, an S&S carburetor, performance cams, and performance exhaust are recommended.
Do to the increased displacement and compression, cams with longer duration are recommended for easier starting.
If replacing the pistons in a older 77" stroker engine, stroker plates are required, and all clearances must be checked.

# RETRO CONVERSION KIT
## FOR 1966–'84 BIG TWINS



### FITMENT
- 1966–'84 big twins
- 1954–'65 big twins with shovel cylinders

### FEATURES AND BENEFITS
- Gives a shovel engine the retro look of a pan
- S&S heads improve performance with increased air flow
- Quiet, dependable valve train with hydraulic tappets

### OPTIONS
- Stock or 3⅝" bore
- Dual spark plugs available on 3⅝" bore heads
- Internal or external oil returns

**RETRO CONVERSION KITS FOR 1954–1984 BIG TWINS**

| Application | Bore | Option | Part # |
|---|---|---|---|
| 1966–'84 bt S&S SH-Series | Stock | Single Plug | **106-1070** |
| | 3⅝" | Single Plug | **106-1071** |
| | | Dual Plugs | **106-1078** |

DISCLAIMER: NOT LEGAL FOR SALE OR USE IN CALIFORNIA ON ANY POLLUTION CONTROLLED MOTOR VEHICLE. Not legal for sale or use on any EPA pollution controlled motor vehicle.
*These kits have internal oil drains.*

**LATE STYLE CAM RECOMMENDATIONS FOR SHOVELHEAD ENGINES WITH RETRO CONVERSION KIT**

| Application | RPM Range | Compression Ratio | If You Used… | Then Use… | Generator Style | Alternator Style |
|---|---|---|---|---|---|---|
| 74" - Stock<br>84" low compression | Low–Mid | 8.5 and below | S&S 450 or Andrews® J or A | S&S 513 | **106-6028** | **106-6027** |
| 74" and 80"–Modified | Mid–High | 8.5 - 9.5 | S&S 514 or Andrews #3 or B | S&S 585 | **33-5131** | **33-5109** |
| 84" - 93" | Low–Mid | 8.0 - 9.0 | S&S 514 | S&S 585 | **33-5131** | **33-5109** |
| 93" HC - 103" | Mid–High | 9.0 - 10.0 | S&S 495 or 560S | S&S 600 | **33-5132** | **33-5058** |
| High Compression | High | Over 10.0 | S&S® 495 or 565S | S&S® 640 | - | **33-5108** |

***NOTES:***
The S&S Retro Conversion Kit requires that a 1984–'99 style cam be used to ensure correct valve timing due to the roller size on the late style tappets use in the kit.
1970–'77 stock engines will also require a 1978–'87 style pinion gear to mate with the late style cam gear.
1966–'69 engines or other engines with generator style crankcases will require a special generator style cam with 1984–'99 style lobes. See chart for recommendation.
1979–'84 o-ring style pushrod covers are required; S&S part #93-4040 or equivalent.

→ REPLACEMENT PARTS: SEE PAGE 188

# 93" SIDEWINDER® HOT SET UP KIT®
## FOR 1966–'84 BIG TWIN ENGINES

### FITMENT
- 1966–'84 big twin engines

### FEATURES AND BENEFITS
- Yields 93 cubic inches with an approximate compression ratio of 8.5:1
- 4½" stroker flywheels assembled with mainshafts and rod
- 3⅝" bore cylinders and pistons
- S&S 514 cam kit, valve springs, adjustable chromoly pushrods
- S&S Super E carb kit



32-2266

**S&S® SIDEWINDER® HOT SET UP KIT SPECIFICATIONS FOR 1966–'84 BIG TWINS**

| Displacement | Bore | Stroke | Compression Ratio | Cylinder Length | Recommended Cam (Stock Valve Train*) | Recommended Cam (S&S Valve Train**) | Recommended Carb |
|---|---|---|---|---|---|---|---|
| 93" | 3⅝" | 4½" | 8.5:1 | 5.405" | S&S 514 | S&S 585 | Super E |

**CRANKCASES & CYLINDER HEADS MUST BE BORED TO ACCECPT S&S® SIDEWINDER BIG BORE CYLINDERS.**

**93" SIDEWINDER® HOT SET UP KIT® FOR 1966–'84 SHOVELHEAD ENGINES±**

| Model Year | Part # |
|---|---|
| 1966–'69 | **32-2265** |
| 1970–'72 | **32-2266** |
| 1973–'77 | **32-2267** |
| 1978–'84 | **32-2268** |

DISCLAIMER: NOT LEGAL FOR SALE OR USE IN CALIFORNIA ON ANY POLLUTION CONTROLLED MOTOR VEHICLE. NOT LEGAL FOR SALE OR USE NATIONWIDE ON ANY FEDERAL POLLUTION CONTROLLED MOTOR VEHICLE UNDER THE CLEAN AIR ACT

±⚠ WARNING: Cancer and Reproductive Harm–www.P65Warnings.ca.gov

# 84" STROKER HOT SET UP KIT®
## FOR STOCK BORE PANHEAD AND SHOVELHEAD ENGINES

### FITMENT
- 1955–'65 & 1966–'84 big twin engines

### FEATURES AND BENEFITS
- Healthy increases in torque and horsepower
- No complicated machining



32-2289

**84" STROKER HOT SET UP KITS®**
**FOR STOCK BORE PANHEAD & SHOVELHEAD ENGINES±**

| Model Year | Part # |
|---|---|
| 1955*–'64 | **32-2284** |
| 1966–'69 | **32-2286** |
| 1970–'77 | **32-2287** |
| 1978–'84 | **32-2289** |

DISCLAIMER: NOT LEGAL FOR SALE OR USE IN CALIFORNIA ON ANY POLLUTION CONTROLLED MOTOR VEHICLE. NOT LEGAL FOR SALE OR USE NATIONWIDE ON ANY FEDERAL POLLUTION CONTROLLED MOTOR VEHICLE UNDER THE CLEAN AIR ACT

**Note: 1955–'57 cases require modification to accept 1.250" Pinion Bearing*

±⚠ WARNING: Cancer and Reproductive Harm–www.P65Warnings.ca.gov

⚠ **THESE KITS REQUIRES SPECIAL S&S PISTONS. SEE CHART.**

**FORGED STOCK BORE STROKER PISTON KITS**

| Oversize | Piston Kit Part # |
|---|---|
| Standard | **106-5527** |
| +.010" | **106-5528** |
| +.020" | **106-5529** |
| +.030" | **106-5530** |
| +.040" | **106-5777** |
| +.050" | **106-5778** |
| +.060" | **106-5779** |
| +.070" | **106-5780** |
| +.080" | **106-5781** |
| +.090" | **106-5782** |

*Piston kits include two pistons, rings, wristpins, and keepers*
*Wristpin Deck Height: 1.100"*

# TOP END REPLACEMENT KITS
## FOR 1966–'84 BIG TWIN ENGINES

### FITMENT
- 1966–'84 big twin engines

### FEATURES AND BENEFITS
- Provide everything you need to replace the top end of a 74" or 80" shovelhead engine.
- S&S top end kits for shovelheads include a set of S&S Super Stock® cylinder heads, a pair of S&S® stock bore cylinders (3⅞" for 74" and 3½" for 80"), S&S 8:1 compression forged pistons, complete with rings and wristpins, manifold clamps, manifold seals, all required hardware, and gaskets.
- 74" top end kits include S&S 106-5495 series 3³¹⁄₃₂" stroke pistons and o-ring style cylinder heads.
- Top end kits for 80" engines include the S&S 106-5511 series 4¼" stroke pistons and rubber band style cylinder heads. Pistons are pre-fit to the cylinders

### TOP END REPLACEMENT KITS FOR STOCK DISPLACEMENT SHOVELHEAD ENGINES

| Displacement | Model Year | Stroke | Compression | High Temp Gloss Finish Part # |
|---|---|---|---|---|
| 74" | 1966–'78 | 3³¹⁄₃₂ | 8:1 | **90-0097** |
| 80" | 1979–'84 | 4¼" | 8:1 | **90-0098** |

DISCLAIMER: NOT LEGAL FOR SALE OR USE IN CALIFORNIA ON ANY POLLUTION CONTROLLED MOTOR VEHICLE. NOT LEGAL FOR SALE OR USE NATIONWIDE ON ANY FEDERAL POLLUTION CONTROLLED MOTOR VEHICLE UNDER THE CLEAN AIR ACT

***NOTES:*** 74" engines have a stroke of 3³¹⁄₃₂", and 80" shovelhead engines have a 4¼" stroke, but the cylinder length for both engines is the same. The 74" piston is taller than the 80" piston; piston deck heights of the two pistons are designed for the same piston to head clearance in both engines. While it is possible to install an 80" top end on a 74" engine, this will result in very low compression and poor performance. A 74" top end will bolt to an 80" crankcase, but, the pistons will contact the cylinder head due to the combination of the taller 74" pistons and the longer stroke of the 80" flywheels. Therefore, it is important to correctly identify the stroke of the engine before ordering a top end kit.

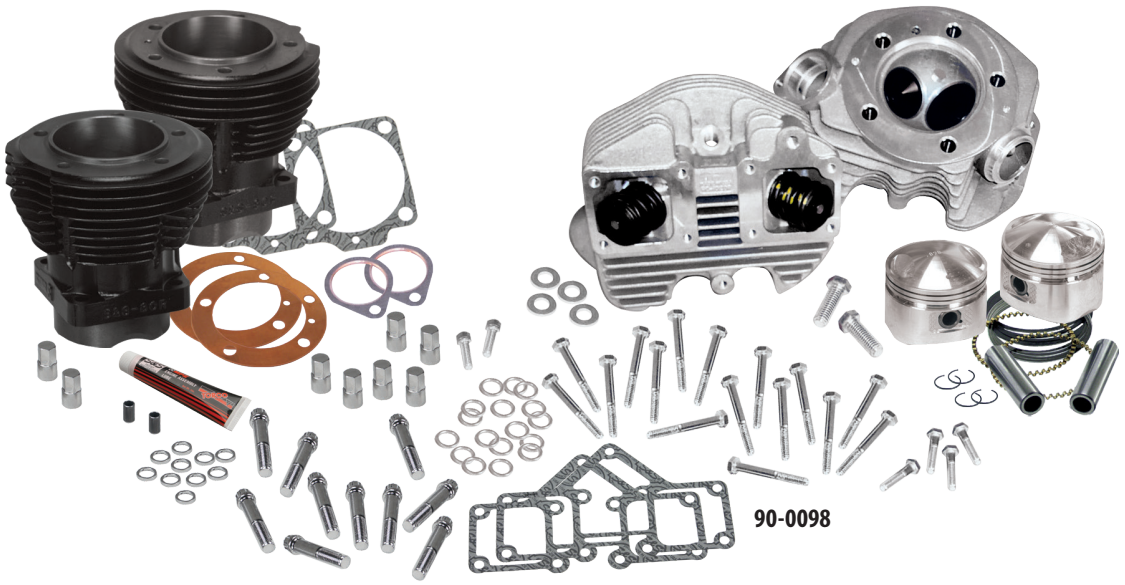


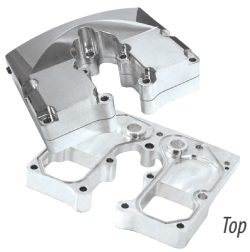

*Top it off with S&S billet rocker boxes. See page 160*

# ENGINE OVERVIEW

S&S offers performance engines in a variety of displacements for 1936–'84 Harley-Davidson® OHV big twins, that provide a vintage vibe and modern muscle. These engines have a deceptively stock appearance, but feature larger displacement and updated internal components for improved performance and reliability. Engineering grade cast iron cylinders are protected with a durable powder coat finish.

## 1966–'84 BIG TWINS

### SH93 (93 CID)

An excellent upgrade option to replace a worn out Harley-Davidson® shovelhead engine, or to power a retro custom. The SH93 provides a significant increase in power over stock 74" or 80" engines, and since it runs well on pump gas, it's a great daily driver. Available with generator, alternator, or alt/gen crankcases.

### SH93H (93 CID HIGH COMPRESSION)

The SH93H is a higher compression version of the SH93. It features dual plugged cylinder heads to control knock, and a more aggressive cam to take advantage of the higher compression. Alternator style crankcases only. Complete with S&S Super E Carb and ignition.

### SH103 (103 CID)

The SH103 is the largest engine S&S offers for 1970–'84 chassis. This engine will require frame clearancing when installed in a stock chassis. Available with alternator style crankcases only. Complete with S&S Super E Carb and ignition.

## 1948–'65 BIG TWINS

### P74 (74 CID)

The P74 engine is preferred by some riders as a replacement engine for bikes with stock drive train that may not be able to take the power of a larger engine. Timken® sprocket shaft bearing makes this engine more reliable. Available with generator style crankcases only. Complete with S&S Super E Carb and ignition.

### P93 (93 CID)

An excellent upgrade option to replace a worn out Harley-Davidson® panhead engine, or to power a retro custom. The P93 provides a significant increase in power over stock 74" engines, and since it runs well on pump gas, it's a great daily driver. Available with generator, alternator, or alt/gen crankcases.

### P93H (93 CID HIGH COMPRESSION)

The P93H is a higher compression version of the P93. It features dual plugged cylinder heads to control knock, and a more aggressive cam to take advantage of the higher compression. Alternator/generator style crankcases only. Complete with S&S Super E Carb and ignition.

### P103 (103 CID)

The P103 is the largest engine S&S offers for 1970–'84 chassis. This engine will require frame clearancing when installed in a stock chassis. Available with alternator style crankcases only. Complete with S&S Super E Carb and ignition. Complete with S&S Super E Carb and ignition.

## 1936–'47 OHV BIG TWINS

### KN74 (74 CID)

The KN74 is a stock displacement engine favored by riders replacing an engine in a chassis with stock drive train that may not handle the increased power of a larger engine. Timken® sprocket shaft bearing makes this engine more reliable. Available with generator style crankcases only. Complete with S&S Super E Carb and ignition.

### KN93 (93 CID)

An excellent upgrade option to replace a worn out Harley-Davidson® knucklehead engine, or to power a retro custom. The KN93 provides a significant increase in power over stock 74" or 61" engines, and since it runs well on pump gas, it's a great daily driver. Available with generator, alternator, or alt/gen crankcases.

# SH-LONG BLOCK

## 1970–'99 STOCK CHASSIS WITH ALTERNATOR STYLE PRIMARY

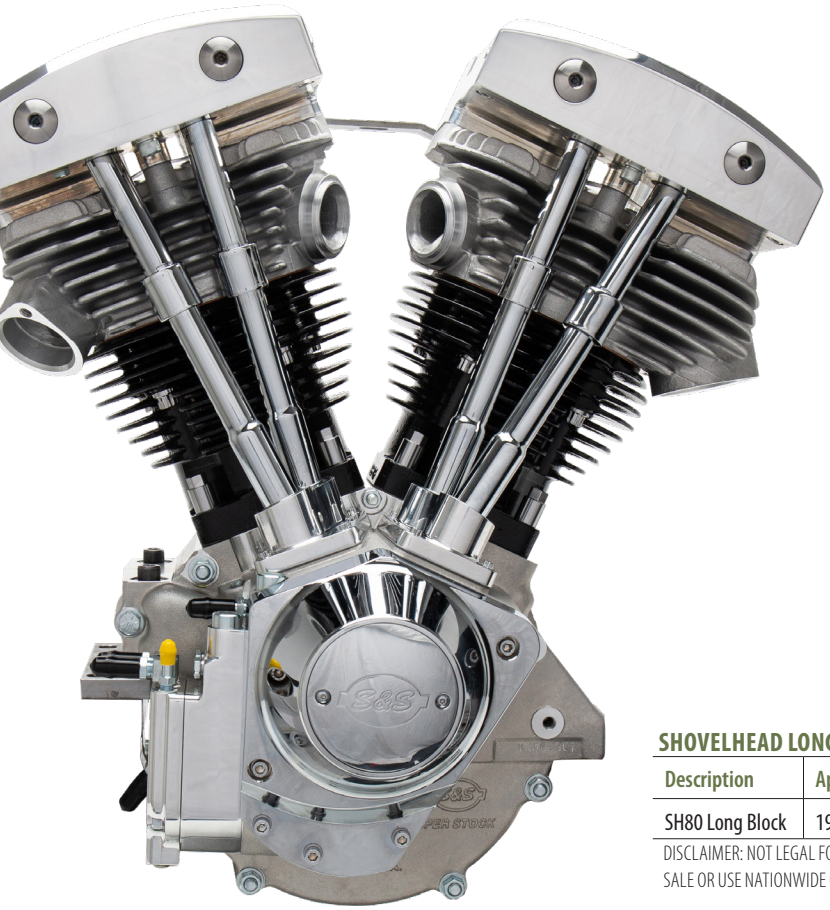

### FEATURES & BENEFITS

- Natural crankcases and black powder coated cylinders
- S&S hydraulic valve train and roller rockers
- Sold without ignition, carb, manifold and air cleaner—Save money by using what you have
- Stock spec H-grind cam
- Billet gearcover
- 3½" Bore
- 4¼" Stroke
- 2 year warranty

### SHOVELHEAD LONG BLOCK

| Description | Application | Part # |
|---|---|---|
| SH80 Long Block | 1970–'99 stock chassis with alternator style primary | **310-0975** |

DISCLAIMER: NOT LEGAL FOR SALE OR USE IN CALIFORNIA ON ANY POLLUTION CONTROLLED MOTOR VEHICLE. NOT LEGAL FOR SALE OR USE NATIONWIDE ON ANY FEDERAL POLLUTION CONTROLLED MOTOR VEHICLE UNDER THE CLEAN AIR ACT



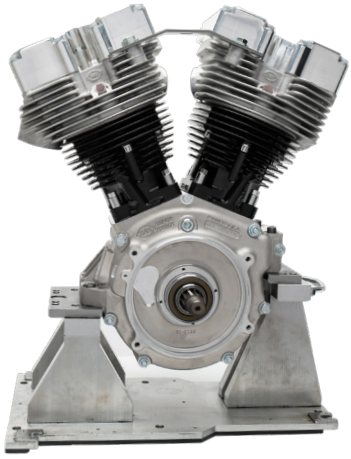



# SH-SERIES ENGINES
## FOR 1966–'99 CHASSIS

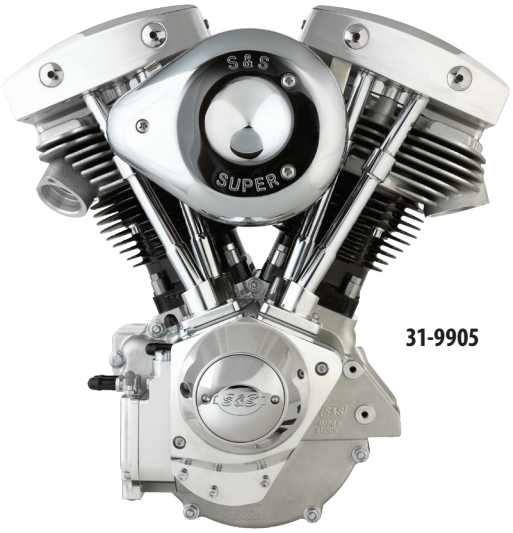


31-9905

### FITMENT
- 1966–'69 stock chassis electric start with alloy primary—flat side gearcover and flat timer cover—available through CTO
- 1970–'99 stock chassis with alternator style primary
- 1970–'99 alternator/generator and alternator custom versions custom bikes with 1970–'99 alternator style primary

### FEATURES AND BENEFITS
- Natural crankcases and black powder coated cylinders
- S&S hydraulic valve train and roller rocker arms
- S&S Super Stock™ single fire ignition system
- 1966–'69 models have correct length sprocket shaft for stock primary and transmission
- Alternator and alternator/generator models have correct sprocket length sprocket shaft for 1970–up primary and transmission
- Alternator/generator engines include oil filter mounting bracket for generator location
- Two-year warranty

### OPTIONS
- 93", 93" high compression, and 103" displacements
- Stock style generator, alternator/generator, or alternator crankcases

**SH-SERIES ENGINE SPECIFICATIONS**

| Engine | Displacement | Bore | Stroke | Carb | Cam | Piston | CR |
|---|---|---|---|---|---|---|---|
| SH93 | 93" | 3⅝" | 4½" | Super E | 585 | Forged | 8.5:1 |
| SH93H | 93" | 3⅝" | 4½" | Super E | 600 | Forged | 9.1:1 |
| SH103 | 103" | 3⅝" | 5" | Super G | 600 | Forged | 9.7:1 |

*NOTE: S&S® SH93H engine contains 1984–'99 style S&S cam and tappets.*
**SH103 will not fit stock chassis—not for everyone!*

**COMPLETE CARBURETED SH-SERIES ENGINES±**

| Engine | Application | Style | Warranty | Billet Gearcover | Cast Gearcover |
|---|---|---|---|---|---|
| SH93 | 1970–'99 Chassis | Alternator | 2 Years | **31-9905** | **31-9904** |
| | Custom | Alternator/Generator | | – | **31-9917** |
| SH93H | 1970–'99 Chassis | Alternator | | **31-9908** | **31-9907** |
| SH103 | 1970–'99 Chassis | Alternator | | **31-9919** | – |
| CTO | Specify | Specify | | **319-0005** | **319-0005** |

DISCLAIMER: NOT LEGAL FOR SALE OR USE IN CALIFORNIA ON ANY POLLUTION CONTROLLED MOTOR VEHICLE. NOT LEGAL FOR SALE OR USE NATIONWIDE ON ANY FEDERAL POLLUTION CONTROLLED MOTOR VEHICLE UNDER THE CLEAN AIR ACT

± ⚠ WARNING: Cancer and Reproductive Harm–www.P65Warnings.ca.gov

# BILLET FILTER MOUNT



### FITMENT
- 1936–'69 big twins with Alt/Gen Crankcase

### FEATURES AND BENEFITS
- Accepts stock oil pressure sending switch
- Machined for easy routing of an oil cooler
- Seals off cam chest, providing a convenient place to spin on an oil filter

| BILLET FILTER MOUNT± | 106-3134 |
|---|---|

± ⚠ WARNING: Cancer and Reproductive Harm–www.P65Warnings.ca.gov

# P-SERIES ENGINES
## FOR 1948–'99 CHASSIS

### FITMENT
- Several versions are available:
- 1948–'64 stock chassis with tin primary—4 rib gearcover and domed timer cover
- 1965 stock chassis electric start with alloy primary—flat side gearcover and flat timer cover *(will fit 1966–'69 chassis)*
- 1970–'99 Alternator/generator and alternator custom versions

### FEATURES AND BENEFITS
- Vintage vibe—*Modern muscle*
- Natural crankcases and stock-looking silver powder coated cylinders
- S&S hydraulic valve train with roller rocker arms
- S&S billet timer and S&S Super Stock single fire ignition system
- 1948–'64 and 1965 models have correct length sprocket shaft for stock primary and transmission
- Alternator and alternator/generator models have correct sprocket length sprocket shaft for 1970–up primary and transmission
- Alternator/generator engines include oil filter mount for generator location
- 1966–'84 exhaust systems
- 1966–'84 intake ports with o-ring inlets
- Two-year warranty

### OPTIONS
- 74", 93", 93" high compression, and 103" displacements
- Stock style generator, alternator/generator, or alternator crankcases

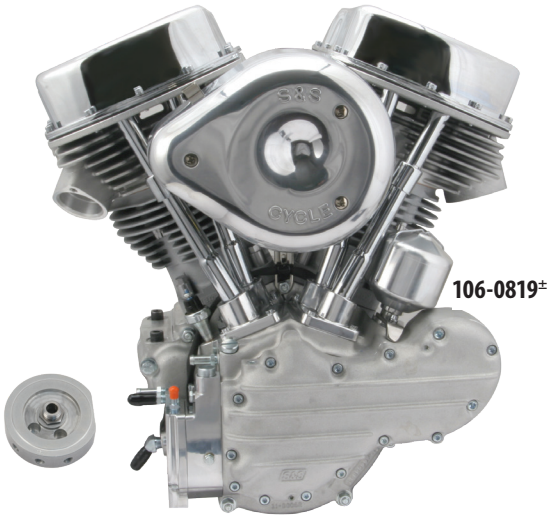

**106-0819±**

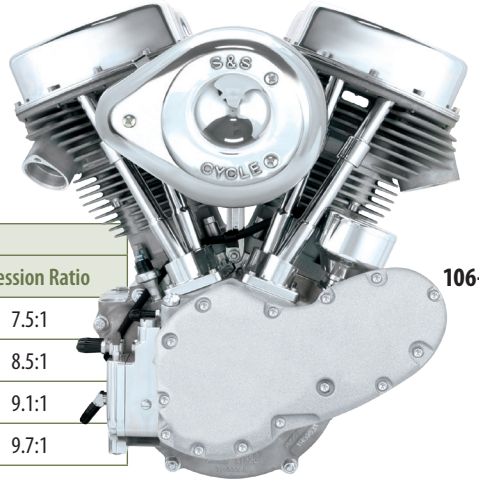

**106-0820±**

**P-SERIES ENGINE SPECIFICATIONS**

| Engine | Displacement | Bore | Stroke | Carb | Camshaft | Piston Type | Compression Ratio |
|---|---|---|---|---|---|---|---|
| P74 | 74" | 3 7/16" | 3 31/32" | Super E | S&S 513 | S&S Forged | 7.5:1 |
| P93 | 93" | 3 5/8" | 4 1/2" | Super E | S&S 585 | S&S Forged | 8.5:1 |
| P93H | 93" | 3 5/8" | 4 1/2" | Super E | S&S 600 | S&S Forged | 9.1:1 |
| P103 | 103" | 3 5/8" | 5" | Super G | S&S 600 | S&S Forged | 9.7:1 |

**COMPLETE CARBURETED P-SERIES ENGINES±**

| Engine | Application | Style | Warranty | Part # |
|---|---|---|---|---|
| P74 | 1948–'64 Chassis | Generator | 2 Years | **310-0224** |
| P93 | 1948–'64 Chassis | Generator | | **106-0819** |
| | 1965–'69 Chassis | Generator | | **106-0820** |
| | Custom 1970–'99 | Alternator | | **106-2685** |
| | | Alternator/Generator | | **106-0821** |
| P93H | Custom 1970–'99 | Alternator/Generator | | **106-0824** |
| P103 | Custom 1970–'99 | Alternator/Generator | | **106-0827** |
| CTO | | Specify | | **319-0003** |

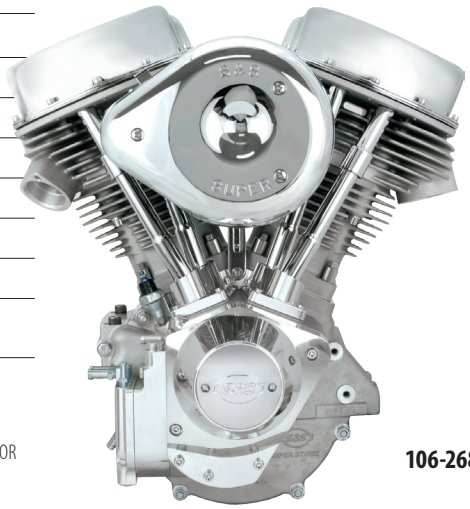

**106-2685±**

*P93H and P103 engines come with dual plugged cylinder heads. Alternator and alternator/generator engines require transmission with 1970–up length main shaft and custom exhaust.*

*1955–'64 style engines may be installed in 1948–'54 chassis if 1955–'64 inner primary tin cover is used.*

DISCLAIMER: NOT LEGAL FOR SALE OR USE IN CALIFORNIA ON ANY POLLUTION CONTROLLED MOTOR VEHICLE. NOT LEGAL FOR SALE OR USE NATIONWIDE ON ANY FEDERAL POLLUTION CONTROLLED MOTOR VEHICLE UNDER THE CLEAN AIR ACT

± ⚠ WARNING: Cancer and Reproductive Harm–www.P65Warnings.ca.gov

# KN-SERIES ENGINES
## FOR 1936–'99 CHASSIS

### FITMENT
- KN74
- 1936–'99 chassis
- KN93
- 1936–'47 stock chassis—will fit in 1948–'65 chassis with front motor mount spacer *(included)*
- 1970–'99 Alternator/generator and alternator custom versions, custom bikes with 1970–'99 alternator style primary

### FEATURES AND BENEFITS
- Natural crankcases and black powder coated cylinders and heads
- S&S Super E
- S&S valve train—solid lifters
- S&S Super Stock™ single fire ignition system and polished billet timer
- 1936–'47 models have correct length sprocket shaft for stock primary and transmission
- Alternator and alternator/generator models have correct sprocket length sprocket shaft for 1970–up primary and transmission
- Alternator/generator engines include oil filter mount for generator location
- Alternator style crankcase—allows the use of modern primary, transmission, clutch components and electrical system
- One-year warranty

**KN-SERIES ENGINE SPECIFICATIONS**

| Engine | Displacement | Bore | Stroke | Carb | Camshaft | Piston Type | Compression Rat |
|---|---|---|---|---|---|---|---|
| KN74 | 74" | 3 7/16" | 3 31/32" | Super E | S&S® 346 | S&S Forged | 7.5:1 |
| KN93 | 93" | 3 5/8" | 4 1/2" | Super E | S&S® 420 | S&S Forged | 8.2:1 |
| KN-Kone | 93" | 3 5/8" | 4 1/2" | Super E | S&S® 420 | S&S Forged | 8.2:1 |

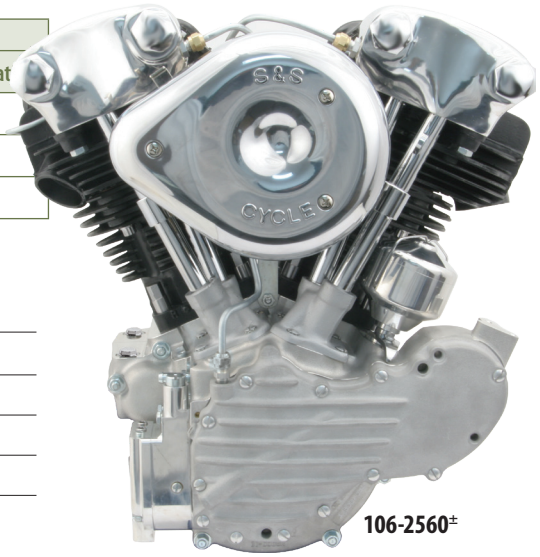

**106-2560±**

**KN-SERIES ENGINES±**

| Description | Application | Style | Warranty | Part # |
|---|---|---|---|---|
| KN74 | 1936–'99 chassis | Generator | 1 year | **310-0025** |
| KN93 | 1936–'47 stock chassis | Generator | | **106-2161** |
| KN93 | 1970–'99 customs | Alternator/Generator | | **106-2560** |

DISCLAIMER: NOT LEGAL FOR SALE OR USE IN CALIFORNIA ON ANY POLLUTION CONTROLLED MOTOR VEHICLE. NOT LEGAL FOR SALE OR USE NATIONWIDE ON ANY FEDERAL POLLUTION CONTROLLED MOTOR VEHICLE UNDER THE CLEAN AIR ACT

± ⚠ WARNING: Cancer and Reproductive Harm–www.P65Warnings.ca.gov

***NOTES:*** Alternator/generator cases have 1948–'99 style front motor mount. Will not fit stock knuckle frames.

Generator style engines have stock motor mounts for 1936–'47 style frames, but can be used in 1948–'99 style frames with front motor mount spacer, part #31-2017 (included). Alternator/generator cases require a transmission with 1970–up length mainshaft, and custom exhaust pipes must be fabricated.

Engines for 1936–'64 chassis with tin primary must use a 1954–'64 style inner primary cover.

S&S Super Stock generator style crankcases are available for stock 3 7/16" or 3 5/8" bore, but can be special ordered for bore sizes up to 3 13/16" and deck heights as much as 3/16" taller than stock.

1936–'54 must use the 1955–'64 style inner steel primary cover.

Since all S&S generator style crankcases use 1958 and later style main bearings, stock flywheel assemblies 1957 and earlier cannot be used in S&S crankcases. Flywheel assemblies must have 1958 and later pinion shaft with 1.250" diameter bearing, and a 1954 and later style sprocket shaft designed for a Timken® main bearing.

Generator style cases for 1936–'47 knucklehead engines are machined to supply oil to the heads from a boss located near the rear tappet guide or from a stock or S&S gearcover. Provision for oil scavenging from the heads in these crankcases is the same as stock, with passageways that connect the tappet guides to the crankcase breather gear.

Crankcases for 1948–'69 engines are machined with a provision to separate the oil supply to the top and bottom ends if an S&S oil pump is used. This feature lets you choose the 1972 and earlier stock "side oiling" system or the 1973 and later split oil system. The stock cast iron oil pump can be used for the "original look" and stock oiling system. If an S&S billet oil pump, part #31-6200± is used, the oiling system can be set-up as stock or updated to a split system.

1963–'65 panhead engines, with outside oil supply lines to the cylinder heads, must use the oil supply port located behind the rear tappet guide or the oil fitting toward the rear of the S&S gearcover. S&S generator style crankcases do not have the stock style "outside oiler" oil supply boss, so special oil supply lines will need to be fabricated.

# SUPER STOCK® GENERATOR STYLE CRANKCASES
## FOR 1936–'69 BIG TWIN ENGINES

### FITMENT
- 1936–'47 knucklehead engines with tin primary
- 1948–'64 panhead engines with tin primary
- 1965-'69 panhead & generator shovelhead with alloy primary
- Custom—alternator/generator

### FEATURES AND BENEFITS
- Pre-clearanced for strokes up to and including 5"
- Motor mounts on crankcases for knucklehead engines are machined to fit stock 1936–'47 frames. An adapter plate is included for 1948 and later style frames
- All cases are designed for late style generator (two brush type) with 5/16" mounting bolts to eliminate early generator cradle/mounting strap bosses for simplicity and economics
- Timken® sprocket shaft main bearing, in all years, instead of stock straight roller bearings—resulting in better flywheel assembly stability, placement, and longer engine life

### KIT CONTENTS
- Crankcase assembly
- All required bearings and hardware for installation
- Assembly instructions

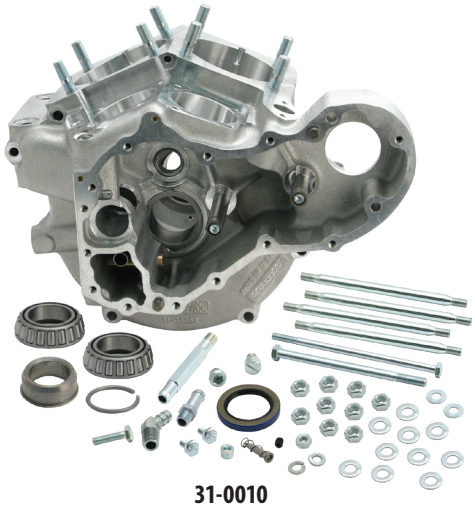

**31-0010**

→ REPLACEMENT PARTS: SEE PAGE 178

### SUPER STOCK® GENERATOR CRANKCASES FOR 1936–'99 BIG TWIN±

| Crankcase Style | Stock Bore | 3⅝" Bore | Notes |
|---|---|---|---|
| 1984–'99 big twin—Alternator/Generator | – | **31-0022** | 7 |
| P-Series and SH-Series—Alternator/Generator | – | **31-0026** | 7 |
| 1965–'69 Panhead or Shovelhead | **31-0010**±<br>*24519-65* | **31-0013** | 1,4,6 |
| 1948–'64 Panhead | **31-0008**±<br>*24519-63, 24519-58, 24519-55* | **31-0009** | 1,2,5 |
| P-Series Replacement 1948–'64 | – | – | 1,5 |
| P-Series Replacement 1965 | **31-0008**±<br>*24519-63, 24519-58, 24519-55* | **31-0013** | 1,6 |
| KN Replacement Alternator/Generator | – | **106-4625** | 1,7,8 |
| KN Replacement Generator/Generator | **31-0006**± | **106-4369** | 1,3,5,8 |

*Note: All S&S crankcases use Timken® style sprocket shaft bearings and 1958 & later pinion bearings. These cases will not accept stock 1957 & earlier flywheel assemblies.s*

*1. 1936–'69 style oil pump.*
*2. Machined for 1948–'62 panhead cylinder base oil feed.*
*3. Motor mounts are machined for stock 1936–'47 frames, adapter plate for 1948 & later style frames is included.*
*4. Includes primary scavenge port machining.*
*5. Machined for 1955–'64 tin primary.*
*6. Machined for 1965–'69 alloy primary.*
*7. Machined for 1970–up alloy primary.*
*8. Uses stock ¼-24 hardware.*

± ⚠ WARNING: Cancer and Reproductive Harm–www.P65Warnings.ca.gov

***NOTES:*** Engines for 1936–'64 chassis with tin primary must use a 1954–'64 style inner primary cover.

S&S Super Stock generator style crankcases are available for stock 3 7/16" or 3⅝" bore, but can be special ordered for bore sizes up to 3 13/16" and deck heights as much as 3/16" taller than stock.

A special order sheet must be filled out for any special order crankcases. Ask your S&S Customer Support Representative or download special order forms from our website at www.sscycle.com/soforms

Since all S&S generator style crankcases use 1958 and later style main bearings, stock flywheel assemblies 1957 and earlier cannot be used in S&S crankcases. Flywheel assemblies must have 1958 and later pinion shaft with 1.250" diameter bearing, and a 1954 and later style sprocket shaft designed for a Timken® main bearing.

Generator style cases for 1936–'47 knucklehead engines are machined to supply oil to the heads from a boss located near the rear tappet guide or from a stock or S&S gearcover. Provision for oil scavenging from the heads in these crankcases is the same as stock, with passageways that connect the tappet guides to the crankcase breather gear.

Crankcases for 1948–'69 engines are machined with a provision to separate the oil supply to the top and bottom ends if an S&S oil pump is used. This feature lets you choose the 1972 and earlier stock "side oiling" system or the 1973 and later split oil system. The stock cast iron oil pump can be used for the "original look" and stock oiling system. If an S&S billet oil pump, part #31-6200±is used, the oiling system can be set-up as stock or updated to a split system.

1963–'65 panhead engines, with outside oil supply lines to the cylinder heads, must use the oil supply port located behind the rear tappet guide or the oil fitting toward the rear of the S&S gearcover. S&S generator style crankcases do not have the stock style "outside oiler" oil supply boss, so special oil supply lines will need to be fabricated.

# SUPER STOCK® ALTERNATOR STYLE CRANKCASES
## FOR 1970–'84 BIG TWIN ENGINES

### FITMENT
- 1970–'84 big twins

### FEATURES AND BENEFITS
- Available for stock, 3⅜", and 3 13/16" bore applications
- Compatible with stock 1970–up flywheel assemblies, primary covers and gearcovers
- Clearanced for 38 amp alternator stators
- Pre-clearanced for strokes up to and including 5"
- Complete with bearings and installation hardware

### KIT CONTENTS
- Crankcase assembly
- All required bearings and hardware for installation
- Assembly instructions

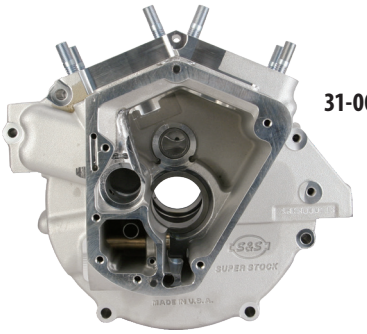

31-0004

CARB compliant
EO #D-355-8

**SUPER STOCK® ALTERNATOR CRANKCASES FOR 1970–'84 BIG TWIN±**

| Crankcase Style | Finish | Stock Bore | 3⅜" Bore | 3⅜" Bore (Small Diameter) | 3 13/16" Bore |
|---|---|---|---|---|---|
| 1970–'84 | Natural | **31-0003†** | **31-0004** | – | – |
| Special Order* | Specify | **31-0002*** | **31-0002*** | **31-0002*** | **31-0002*** |

*NOTES: 1981–'84 style oil pump. Includes primary scavenge port machining. Machined for 1970 & later alloy primary.*

†Exempt from emissions tampering regulations under CARB EO# D-355-8 when used with stock bore cylinders

**Download the Special Order Form at sscycle.com/soforms*

± ⚠ WARNING: Cancer and Reproductive Harm–www.P65Warnings.ca.gov

***Special Orders:***

S&S Super Stock alternator crankcases can be special ordered for cylinder bore sizes up to 3 13/16" and deck heights as much as 3/16" taller than stock.

A special order sheet must be filled out for any special order crankcases. Ask your S&S Customer Support Representative or download special order forms from our website at www.sscycle.com/soforms

→ REPLACEMENT PARTS: SEE PAGE 176

# FLYWHEELS
## FOR 1937–'73 45" FLATHEAD ENGINES

### FITMENT
- 1937–'52 W/WR models
- 1952–'53 KR & all K models (excluding KH)
- 1932–'73 G models

### FEATURES AND BENEFITS
- 3 13/16" stroke
- Complete S&S connecting rod set–includes special crankpin, rods, bearings and cages
- Compatible with stock 45" KR rods or rods for 1957–"84 Sportster® models, when used with the special crankpin



⚠ **WILL NOT FIT KH MODELS**

**FLYWHEELS FOR 1937–'73 45" FLATHEAD ENGINES**

| Description | Part # |
|---|---|
| S&S Replacement Flywheels for 45" Flathead *23925-37* | **32-3013** |

**Special Order: Download the Special Order Form at sscycle.com/soforms*

TRYING TO IDENTIFY A SET OF S&S FLYWHEELS? SEE FLYWHEEL I. D. CHART ON PAGE 226

# FLYWHEELS
## FOR 1936–'84 BIG TWIN ENGINES

### FITMENT
- 1936–'84 OHV big twins
- 1930–'48 flathead *(side valve)*
- KN, P, and SH-Series engines

### FEATURES AND BENEFITS
- CNC machined from heat-treated, closed die, steel forging
- Stronger than cast iron or late style steel flywheels
- Available in a wide variety of styles and strokes
- Available balanced or unbalanced
- Unassembled balanced flywheels are balanced by the static method
- Assembled flywheels are dynamic balanced after assembly using our American-Hofmann® dynamic balancing machine *(unless otherwise specified)*
- 1930–'53 styles fit stock or S&S sprocket shafts
- 1954–'84 styles available for S&S sprocket shafts only

### OPTIONS FOR SPECIAL ORDER
- Model year group
- Stroke
- Diameter
- Assembly and balancing
- Additional components—pinion shaft, sprocket shaft and connecting rods

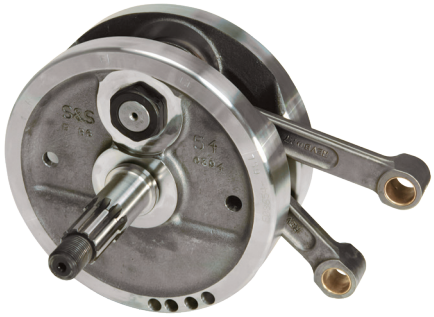

**FLYWHEELS FOR 1936–'84 BIG TWIN**

| | |
|---|---|
| Special Order | **32-2015*** |

**Special Order: Download the Special Order Form at sscycle.com/soforms*

# FLYWHEELS
## FOR 1957–'85 HARLEY-DAVIDSON® IRONHEAD SPORTSTER®

### FITMENT
- 1957–'85 Ironhead Sportster® models
- Fits OHV 900cc and 1000cc engines

### FEATURES AND BENEFITS
- CNC machined from heat-treated, closed die, steel forging
- Stronger than cast iron or late style steel flywheels
- Available in a wide variety of styles and strokes
- Available balanced or unbalanced
- Unassembled balanced flywheels are balanced by the static method
- Assembled flywheels are dynamic balanced after assembly using our American-Hofmann® dynamic balancing machine *(unless otherwise specified)*

### OPTIONS FOR SPECIAL ORDER
- Model year group
- Stroke
- Diameter
- Assembly and balancing
- Additional components—pinion shaft, sprocket shaft, connecting rods
- Available for S&S sprocket shafts only

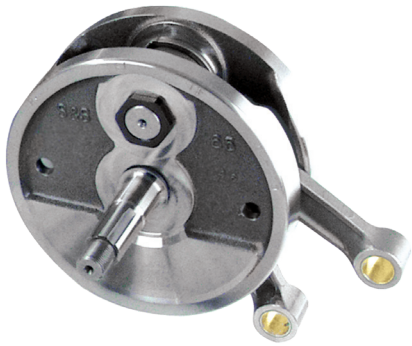

**FLYWHEELS FOR HARLEY-DAVIDSON® SPORTSTER® MODELS**

| Stroke, 7⅞" Diameter (Stock) | Part # |
|---|---|
| Special Order | **32-3014*** |

**Special Order: Download the Special Order Form at sscycle.com/soforms*

**TRYING TO IDENTIFY A SET OF S&S FLYWHEELS?
SEE FLYWHEEL I. D. CHART ON PAGE 226**

**ANY JOB IS EASY WITH THE RIGHT TOOLS
S&S FLYWHEEL BALANCING KIT, SEE PAGE 206.
S&S FLYWHEEL ASSEMBLY FIXTURE &
TRUING SPANNER,
SEE PAGE 207**

# REPLACEMENT FLYWHEELS
## FOR S&S® VINTAGE ENGINES

### FITMENT
- KN-Series Engines
- P-Series Engines
- SH-Series Engines

### FEATURES AND BENEFITS
- Exact same parts used in S&S production engines



**32-2226**

**REPLACEMENT FLYWHEEL ASSEMBLIES FOR KN-SERIES ENGINES 1936–'47±**

| Engine | Stroke | Diameter | Part # |
|---|---|---|---|
| KN74 | 3 31/32" | 8½" | **320-0014** |
| KN93 Alt/Gen | 4½" | 8½" | **106-4658** |

±⚠WARNING: Cancer and Reproductive Harm–www.P65Warnings.ca.gov

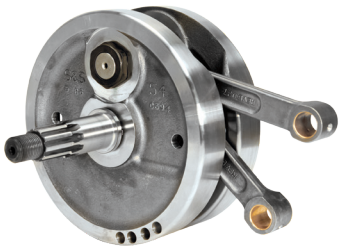

**32-2235**

**REPLACEMENT FLYWHEEL ASSEMBLIES FOR P-SERIES ENGINES 1954–'64**

| Engine | Stroke | Diameter | Part # |
|---|---|---|---|
| P74 | 3 31/32" | 8½" | **320-0013** |
| P93, P93H - 1954–'64 Generator | 4½" | 8½" | **106-0806** |
| P93, P93H - 1965 Generator | 4½" | 8½" | **32-2224** |
| P93, P93H - Alternator/Generator | 4½" | 8½" | **32-2226** |
| P103 - Alternator/Generator | 5" | 8¼" | **32-2990** |

**REPLACEMENT FLYWHEEL ASSEMBLIES FOR SH-SERIES ENGINES 1966–'84**

| Engine | Stroke | Diameter | Part # |
|---|---|---|---|
| SH80 - Alternator | 4¼" | 8½" | **32-2235** |
| SH93, SH93H - Generator | 4½" | 8½" | **32-2224** |
| SH93, SH93H - Alternator/Generator | 4½" | 8½" | **32-2226** |
| SH103 | 5" | 8¼" | **32-2990** |

TRYING TO IDENTIFY A SET OF S&S FLYWHEELS? SEE FLYWHEEL I. D. CHART ON PAGE 226

# SPROCKET SHAFT ASSEMBLIES
## FOR BIG TWIN ENGINES



33-2004



33-2003



33-2002



33-2001

### TAPERED SPROCKET SHAFT ASSEMBLIES

| | |
|---|---|
| **1970–'99 Big Twin** | |
| Fits S&S® SE or SL flywheels only | **33-2004** |
| **1965–'69 Big Twin** | |
| Fits S&S SE or SL flywheels only | **33-2003** |
| **1955–'64 Big Twin** | |
| Fits S&S SE or SL flywheels only | **33-2002** |
| **1930–'54 Big Twin—Including UL SVBT** | |
| Fits S&S E or Stock flywheels *(includes motor sprocket nut)* ***24001-30*** | **33-2001** |

### REPLACEMENT PARTS FOR TAPERED SPROCKET SHAFT ASSEMBLIES

| | |
|---|---|
| **Sprocket Shaft Nut** | |
| 1930–'54 | **33-2031** |
| 1955–'84 | **33-2033** |
| **Sprocket Shaft Key** | |
| 1930–'54 | **50-8224** |
| 1955–'84 | **50-8225-S** |
| **Motor Sprocket Nut** | |
| 1930–'54 *(fits S&S® sprocket shafts only)* | **33-2032** |

# SPROCKET SHAFT ASSEMBLIES
## FOR HARLEY-DAVIDSON® SPORTSTER® MODELS



33-2301



33-2302

### SPROCKET SHAFT ASSEMBLIES

| | |
|---|---|
| **1977–'85 Sportster® Models** | |
| Fits S&S D, SB, SBD, SC, SCD, SCDR, and SCR flywheels only | **33-2302** |
| **1957–'76 Sportster Models** | |
| Fits S&S SB flywheels only | **33-2301** |

### REPLACEMENT PARTS FOR SPROCKET SHAFT ASSEMBLIES

| | |
|---|---|
| **Sprocket Shaft Nut** | |
| Fits all S&S sprocket shafts for Sportster® models | **33-2331** |
| **Sprocket Shaft Key** | |
| Key,.188" x .469",Steel | **50-8224** |

*All reference to HD® part numbers is for identification purposes only. We in no way are implying that any of S&S Cycle's products are original equipment parts or that they are equivalent to the corresponding HD® part number shown.*

# PINION SHAFT ASSEMBLIES
## FOR BIG TWIN ENGINES



**33-2024**



**33-2027**



**33-2021**

| PINION SHAFT ASSEMBLIES | |
|---|---|
| **Late 1981–'99 Big Twin—Tapered Pinion Shaft** | |
| Stock length for S&S or stock big twin crankcases. Fits S&S BL, SL, SM or stock flywheels. | |
| Standard (1.250") Bearing Diameter | **33-2027** |
| **1958–Early '81 Big Twin—Tapered Pinion Shaft** | |
| Fits S&S L, AL, SE, or stock flywheels *24006-54A, 24006-73* | **33-2024** |
| **1939–'53 Big Twin—Splined Pinion Shaft** | |
| Fits S&S E or stock flywheels | **33-2021** |

| REPLACEMENT PARTS FOR PINION SHAFT ASSEMBLIES | |
|---|---|
| **Pinion Shaft Nut** | |
| 1939–'81 | **33-2031** |
| 1981 & 1984 | **33-2033** |
| **Pinion Shaft Key** | |
| 1930–'81 | **50-8224** |
| 1981 & 1984 | **50-8225-S** |
| **Metering Plug** | |
| No Hole | **50-8314**± |
| .0625" Hole | **50-8316**± |
| .0925" Hole | **50-8317**± |
| **Pinion & Oil Pump Drive Key** | |
| 1958–'81 & 1984 | **50-8221-S** |

± ⚠ WARNING: Cancer and Reproductive Harm–www.P65Warnings.ca.gov

# PINION SHAFT ASSEMBLIES
## FOR HARLEY-DAVIDSON® SPORTSTER® MODELS

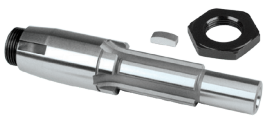

**33-2321**



**33-2322**

| PINION SHAFT ASSEMBLIES | |
|---|---|
| **1957–'76 Sportster Models** | |
| Fits S&S B, SB, or stock flywheels. | |
| Standard *24005-57* | **33-2321** |
| **1977–Early '81 Sportster Models** | |
| Fits S&S B, BD, SB, SBD, or stock flywheels. Requires 1977–'86 main bearing. | **33-2322** |

| REPLACEMENT PARTS PINION SHAFT ASSEMBLIES | |
|---|---|
| **Pinion Shaft Key** | |
| 1957–'81 | **50-8224** |
| 1981–'85 *11218* | **50-8222-S** |
| **Metering Plug** | |
| 1977–'85 | **50-8316** |

*All reference to HD® part numbers is for identification purposes only. We in no way are implying that any of S&S Cycle's products are original equipment parts or that they are equivalent to the corresponding HD® part number shown.*

# BILLET OIL PUMPS
## FOR 1936–'84 OHV BIG TWINS

### FITMENT
- Pumps are available for stock 1936–'84 big twin engines
- Custom engines using S&S crankcases

### FEATURES AND BENEFITS
- Same width oil supply and return gears as the stock Harley-Davidson® aluminum pump
- S&S pinion and oil pump drive shaft drive gears increase potential oil volume delivery by 25% over stock on 1972 and earlier engines
- S&S pumps for 1936–'67 engines used with the S&S oil pump drive gears deliver 33% more oil than the original cast iron pump
- Machined with an oil pressure relief bleed off passageway—*relieves pressure build up on top of the valve to maintain consistent oil pressure*
- Oil pressure regulation bypass routes excess oil directly to the supply side of the pump—*reduces the amount of oil returned to the tank, less foaming and cavitation*
- The standard pump cover allows total flexibility for oil system configuration with a number of oil feed and return options

### OPTIONS
- Pump only kits
- Pump with gears—*includes drive gears and breather gear*

### KIT CONTENTS
- Complete oil pump assembly
- Mounting hardware, fittings and gaskets
- Instructions
- Pump with gear kits also include:
- Pinion shaft pump drive gear
- Oil pump drive shaft gear
- Breather gear




### OIL PUMP KITS FOR 1936–'84 BIG TWIN ENGINES±

| Year/Crankcase | Without Gears & Shims | With Drive Gear, Breather Gear, & Shim Kit |
|---|---|---|
| KN-Series** (Silver Powder Coated) | **106-4688** | – |
| 1936–'47 | **31-6200**§ USA | – |
| 1948–'53 | **31-6200** | **31-6292** USA |
| 1954–'69 | **31-6200** | **31-6293** USA |
| 1970–'77 | – | **31-6294** USA |
| 1978–'84 | **31-6203**§ USA | **31-6295** USA |

**Requires 1973-'77 breather gear. **Uses a 28 lb pop-off spring to lower oil pressure at high RPM.*

§*Universal cover with top and bottom oil feeds.*

± WARNING: Cancer and Reproductive Harm–www.P65Warnings.ca.gov

### OIL PUMP COVER ONLY FOR 1936–'91 BIG TWINS

| Description | Part # |
|---|---|
| Universal | **31-6059** *31-6041* |

→ REPLACEMENT PARTS: SEE PAGE 182

*All reference to HD® part numbers is for identification purposes only. We in no way are implying that any of S&S Cycle's products are original equipment parts or that they are equivalent to the corresponding HD® part number shown.*

# CAMSHAFTS
## FOR 1936–'47 OHV BIG TWINS



### FITMENT
- 1936–'47 OHV big twins
- S&S® KN-Series engines

### FEATURES AND BENEFITS
- Quality construction—Made in-house by S&S Cycle in Viola, Wisc.
- Higher lift and increased valve timing for better performance

### APPLICATIONS
**KN346 Cam**: This is a service part cam for 74" knuckle engines. The KN346 cam is ground to stock specifications.

**KN420 Cam:** This "high-lift" cam for modified knuckle engines features .420" valve lift and increased duration for larger engines up to 93" and compression ratio of up to 8.5:1. Special high-lift valve springs are required.

**CAMS FOR 1936–'47 OHV BIG TWINS & KN-SERIES ENGINES**

| Cam Name | Part # |
|---|---|
| KN420 | **106-2409** |
| KN346 | **106-3676** *25522-36* |

**CAM SPECIFICATIONS FOR 1936–'47 OHV BIG TWINS AND KN-SERIES ENGINES**

| | Cam Timing (Open/Close) | | Cam Duration | | Lobe Centerline | | Max Valve Lift | | Valve Lift @ TDC | |
|---|---|---|---|---|---|---|---|---|---|---|
| Cam Name | Intake | Exhaust | Intake | Exhaust | Intake | Exhaust | Intake | Exhaust | Intake | Exhaust |
| KN420 | 31°/55° | 60°/30° | 266° | 270° | 102° | 110° | .420" | .420" | .167" | .152" |
| KN346* | 10°/51° | 40°/12° | 241° | 232° | 110.5° | 104° | .346" | .346" | .085" | .100" |

**Ground to stock specifications.*

***NOTE:*** S&S can do a special order cam, please contact your S&S customer service representative for more information

# CAMSHAFTS

## FOR 1948–'84 BIG TWINS WITH STOCK VALVE TRAIN

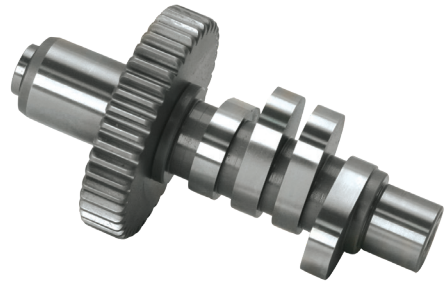

### FITMENT

- 1948–'69 engines with generator style crankcases
- 1970–'84 engines with alternator style crankcases
- Early SH-Series engines with stock style valve train

### APPLICATIONS

**S&S H-Grind:** Service part for panhead and shovelhead engines. This grind is a dead-on reproduction of the stock cams used in 1948–1984 big twins. Perfect for repair and restoration of 74" and 80" engines. Available for generator engines with inner cam bushings or inner cam bearings, and for early and late alternator engines with different cam gear pitch diameters. Note that the front and rear cylinders have unique timing specs.

**450S Cam:** A bolt-in hydraulic cam for 74" and 80" shovelhead engines 1966–'79 and 1983–'84. (Can be used in 1981–'82 models if cylinder heads are updated to late style valve guides.) The 450S can also be used as a low end torque cam in modified shovelhead engines up to 88" with compression ratios of up to 8.5:1. Although designed for use with hydraulic tappets, the S&S 450S can be used with solid lifters. Use with solids will result in more valve train noise, slightly higher cylinder pressure, and slightly more torque. 1500–4500 rpm.

**514 Cam:** For 84" to 93" strokers with no greater than 9:1 CR—best gains occur in the mid range from 2500 to 5000 rpm where most riding is done. Relatively quiet and easier on the valve train than most other cams with lifts as high. Solid lifters or aftermarket hydraulic tappets are recommended, valve spring spacing and other normal clearancing checks required. 2500–5000 rpm.

**560S Cam:** For 88" to 103" engines between 9:1 to 10:1 CR—Excellent power across the rpm range. Not recommended for stock displacement or lower compression engines. Requires high lift valve springs and normal clearance checks. Solid lifters only. 3500–6000 rpm.

**CAMSHAFTS FOR 1948–'84 BIG TWIN ENGINES**

| Cam Name | Model Year | Part # |
|---|---|---|
| Service Part H-Grind | 1948–'57 | **330-0164** |
| | 1958–'69 | **330-0170** |
| | 1970–'77 | **330-0165** |
| | 1978–'84 | **330-0166** |
| S&S 450S | 1948–'69 | **33-5062** |
| | 1970–'77 | **33-5063** |
| | 1978–'84 | **33-5064** |
| S&S 514 | 1948–'69 | **33-5050** |
| | 1970–'77 | **33-5051** |
| | 1978–'84 | **33-5052** |
| S&S 560S | 1948–'69 | **33-5059** |
| | 1970–'77 | **33-5060** |
| | 1978–'84 | **33-5061** |

DISCLAIMER: NOT LEGAL FOR SALE OR USE IN CALIFORNIA ON ANY POLLUTION CONTROLLED MOTOR VEHICLE. NOT LEGAL FOR SALE OR USE NATIONWIDE ON ANY FEDERAL POLLUTION CONTROLLED MOTOR VEHICLE UNDER THE CLEAN AIR ACT

***NOTE:*** S&S can do a special order cam, please contact your S&S customer service representative for more information

**CAM SPECIFICATIONS FOR 1948–'84 BIG TWIN ENGINES**

| Cam Name | Application | Model Year | Valve Timing[1] Open/Close | | Valve Duration | | Valve Lift[2] | Lift @ TDC[3] | | Spring Spacing Required | Tappet[4] Type Required |
|---|---|---|---|---|---|---|---|---|---|---|---|
| | | | Intake | Exhaust | Intake | Exhaust | | Intake | Exhaust | | |
| | | | Open BTDC/ Close ABDC | Open BBDC/ Close ATDC | | | | | | | |
| Service Part H-Grind | Service part replacement cam for pan and shovel engines | 1948–'84 | 0°/40° F<br>20°/33° R | 53°/12° F<br>53°/12° R | 220° F<br>233° R | 245° F<br>245° R | .389" F<br>.391" R | .076" F<br>.076" R | .131" F<br>.131" R | No Bolt-In | Hydraulic |
| S&S 450S | Engines up to 88" with up to 8.5:1 CR Good low and mid range torque | 1948–'84 | 18°/38° | 40°/18° | 236° | 238° | .475" Pan<br>.453" Shovel | .158" Pan<br>151" Shovel | .152" Pan<br>.145" Shovel | No Bolt-In | Hydraulic or Solid |
| S&S 514 | 80" to 96" engines with 8:1 to 9:1 CR Good mid range | 1948–'84 | 23°/43° | 43°/23° | 246° | 246° | .540" Pan<br>.514" Shovel | .177" Pan<br>.169" Shovel | .177" Pan<br>.169" Shovel | Yes | Solid |
| S&S 560S | 88" to 103" engines with 9:1 to 10.1:1 CR Strong power | 1948–'84 | 20°/55° | 60°/20° | 255° | 260° | .587" Pan<br>.560" Shovel | .176" Pan<br>.168" Shovel | .176" Pan<br>.164" Shovel | Yes | Solid |

*[1]Timing designation is function of zero lash @ .053" off base circle.*
*[2]Pan and shovel lifts are determined by rocker arm ratio. Pan ratio is nominally 1.5":1 and shovel ratio is nominally 1.4:1. S&S rocker arms for shovels have 1.5:1 rocker arm ratio, so lift will be the same as pan lift.*
*[3]TDC lifts are measured at the valve and are for reference only. Overlap valve lifts must be checked on assembled motor.*
*[4]Cams specified for solid tappets may be used with modern high performance hydraulic tappets for shovelhead engines. Stock hydraulic tappets are not recommended. 1980-'81 engines require conversion to late style valve guides*

# CAMSHAFTS

## FOR 1954–'84 BIG TWINS WITH S&S® VALVE TRAIN CONVERSION KIT

### FITMENT

- 1954–'65 engines with S&S Head Update kit
- 1966–'84 engines with Hydraulic Conversion kit
- P-Series and SH-Series engines
- Custom generator style engines with 1984–'99 style top end

### FEATURES AND BENEFITS

- Quality construction—Made in-house by S&S Cycle in Viola, Wisc.
- Higher lift and increased valve timing for better performance
- Quiet, dependable hydraulic valve train when used with S&S Hydraulic Conversion kits



**33-5131**



**106-6028**

**CAM SPECIFICATIONS FOR 1954–'84 BIG TWIN ENGINES REQUIRING 1984–'99 STYLE CAMS**

| Cam | Application | Valve Timing[1] Open/Close | | Valve Duration | | Valve Lift | Lift @ TDC[2] | | Spring Spacing Required | Tappet Type Required |
|---|---|---|---|---|---|---|---|---|---|---|
| | | Intake | Exhaust | Intake | Exhaust | | Intake | Exhaust | | |
| | | *Open BTDC/Close ABDC* | *Open BBDC/Close ATDC* | | | | | | | |
| S&S 513 | 74" - 84" Stock or low compression | 18°/38° | 40°/18° | 236° | 238° | .472" | .163" | .187" | No | Hydraulic |
| S&S 585 | 74"- 80" engines 8.5:1 - 9.5:1 CR<br>84" - 93" engines up to 8:1 - 9:1 CR | 20°/45° | 60°/20° | 245° | 260° | .540" | .172" | .166" | Yes | Hydraulic |
| S&S 600 | 93" - 103" engines 9:1 - 10:1 CR | 20°/55° | 60°/20° | 255° | 260° | .554" | .177" | .170" | Yes | Hydraulic |
| S&S 631 | High rpm cam for 93" - 103" engines 11:1+ CR | 34°/61° | 66°/29° | 275° | 275° | .581" | .359" | .204" | Yes | Solid or Hydraulic |
| S&S 640 | 93" - up engines 10:1 or greater compression | 25°/60° | 65°/20° | 265° | 265° | .590" | .205" | .192" | Yes | Hydraulic |

*[1]Timing designation is function of zero lash @ .053" off base circle.*

*[2]Lifts at TDC are measured at the valve and are for reference only. Overlap valve lifts must be checked on assembled motor. Lifts based on 1.5:1 Rocker Ratio*

**CAMSHAFTS FOR 1954–'84 BIG TWIN ENGINES REQUIRING 1984–'99 STYLE CAMS**

| Cam | Application | Generator Part # | Alternator Part # | Tappet Type Required |
|---|---|---|---|---|
| S&S 513 | 74" - 84" Stock or low compression | **106-6028** | **106-6027** | Hydraulic |
| S&S 585 | 74"- 80" engines 8.5:1 - 9.5:1 CR<br>84" - 93" engines up to 8:1 - 9:1 CR | **33-5131** | **33-5109** | Hydraulic |
| S&S 600 | 93" - 103" engines 9:1 - 10:1 CR | **33-5132** | **33-5058** | Hydraulic |

DISCLAIMER: NOT LEGAL FOR SALE OR USE IN CALIFORNIA ON ANY POLLUTION CONTROLLED MOTOR VEHICLE. NOT LEGAL FOR SALE OR USE NATIONWIDE ON ANY FEDERAL POLLUTION CONTROLLED MOTOR VEHICLE UNDER THE CLEAN AIR ACT

**LATE STYLE CAM RECOMMENDATIONS FOR PANHEAD AND SHOVELHEAD ENGINES**

| Application | RPM range | Compression Ratio | If you used… | Then Use | Generator | Alternator |
|---|---|---|---|---|---|---|
| 74"–Stock<br>84" low compression | Low - Mid 1500–4500 rpm | 8.5 and below | S&S® 450 or Andrews® J or A | S&S® 513 | **106-6028** | **106-6027** |
| 74" and 80"–Modified | Mid - High 3500–6000 rpm | 8.5–9.5 | S&S® 514 or Andrews #3 or B | S&S® 585 | **33-5131** | **33-5109** |
| 84"–93" | Low - Mid 2500–5500 rpm | 8.0–9.0 | S&S® 514 | S&S® 585 | **33-5131** | **33-5109** |
| 93" HC–103" | Mid - High 3500–6000 rpm | 9.0–10.0 | S&S® 495 or 560S | S&S® 600 | **33-5132** | **33-5058** |
| High Compression | High 3500–6500 rpm | Over 10.0 | S&S® 495 or 565S | S&S® 640 | – | **33-5108** |

***NOTES:*** In order to achieve stated timing specifications, these cams must be used in engines with 1984–'99 style tappets.

These cams should not be ordered as replacement parts for early S&S SH-Series engines, or for any shovelhead engine equipped with stock valve train. For replacement parts for these engines, select stock style cams and tappets.

S&S can do a special order cam, please contact your S&S customer service representative for more information

# PINION SHAFT GEAR KITS

## FITMENT
- 1939–'89

## FEATURES AND BENEFITS
- Contain all the components that need to be installed on the pinion shaft for the specified year group.
- Kits for 1939–'53 and 1954–'77 can be used in 1972 and earlier engines to speed up the oil pump by 25% for more potential oil volume, since S&S oil pump drive gears are of the 1973 and later 6-tooth design.

### 1939–'53 S&S® BIG TWIN STYLE PINION SHAFT GEAR KITS

| Size | Color Code | Part # |
|---|---|---|
| Biggest | Orange | **106-3217** |
| | Black | **106-3218** |
| Average | Blue | **106-3220** |
| | Green | **106-3221** |



**106-3217**

### EARLY 1954–'77 S&S® BIG TWIN STYLE PINION SHAFT GEAR KITS

| Size | Color Code | Part # |
|---|---|---|
| Smallest | White | **106-3214** |
| | Brown | **106-3215** |
| | Yellow | **106-3216** |



**106-3215**

### LATE 1977–'89* S&S® BIG TWIN STYLE PINION SHAFT GEAR KITS

| Size | Color Code | Part # |
|---|---|---|
| Biggest | Yellow | **33-4185** |
| Average | Red | **33-4148** |
| | Blue | **33-4181** |
| Smallest | Black | **33-4180** |

**Use this kit when installing an S&S® flywheel assembly in a 1990–'99 Engine*



**33-4148**

### INDIVIDUAL COMPONENTS

| Description | Part # |
|---|---|
| Pinion Shaft Gear Spacer<br>Fits 1954–'89 big twin engine. USA 1,2,3 | **33-4289** |
| Pinion Shaft Gear Nut *26349-54*<br>Fits 1954–'89 big twin engine. USA 1,2,3 | **33-4244** |
| S&S Upgrade Pinion Shaft Oil Pump Drive Gear 1939–'53 Big Twin–6-Tooth.<br>Requires S&S part #33-4230 or *26345-73*drive shaft drive gear.<br>Fits 1939–'53 stock and S&S pinion shafts. | **33-4237** |
| Pinion Shaft Oil Pump Drive Gear *26349-73, 26349-73A*<br>1973–'89–6-Tooth.<br>May be used in 1954–'72 engines, but requires S&S part #33-4230 or *26345-73* oil pump shaft drive gear.<br>Fits 1954–'89 stock and 1958–'99 S&S pinion shafts. | **33-4232** |
| Oil Pump Drive Gear 24-Tooth<br>Requires S&S part #33-4232, part #33-4237, or *26349-54* pinion shaft drive gear. Fits 1973–'99 big twin engine.<br>*26349-73, 26349-73A* | **33-4230** |



**33-4289**



**33-4244**



**33-4237**



**33-4232**



**33-4230**

***NOTE:*** All S&S Pinion Shaft Gear Kits must be used with 1973–'99 style 24-tooth oil pump drive shaft gear such as S&S part #33-4230.

*All reference to HD® part numbers is for identification purposes only. We in no way are implying that any of S&S Cycle's products are original equipment parts or that they are equivalent to the corresponding HD® part number shown.*

# REPLACEMENT PINION GEARS

High quality S&S pinion gears are carefully machined, heat treated and then finish ground.

Three distinct year groups, in up to eight different color coded sizes for optimum gear lash, are available for big twin engines. S&S color codes match Harley-Davidson® color codes so that replacement is easy. Just pick the appropriate color S&S gear that matches the color on the damaged stock gear (see notes).

***NOTES:*** If the stock gear is unmarked and the size is unknown or you are scratch building an engine and have no gear, we recommend that you order a gear in the middle of the size range. These sizes were used more often and should provide adequate gear clearance under most circumstances. When in doubt, use a gear from the middle to the small side of the range, because a combination of looser fitting smaller gears is less likely to cause binding and premature wear. Consult the chart for the size and appropriate part number required. If you wish to achieve optimum cam gear to pinion gear fit, consult your factory service manual for instructions on fitting these gears before making a selection. Some sizes, particularly those on and near the ends of each range, are available on a limited basis because they are the extremes.



**Mid**
**1954–'77**



**Early**
**1939–'53**



**Late**
**1977–'99**

**BIG TWIN STYLE PINION GEAR SELECTION CHART**

| | 1939–'53 | | 1954–'77 | | 1977–'89* | |
|---|---|---|---|---|---|---|
| | Color Code | Part # | Color Code | Part # | Color Code | Part # |
| Biggest | Orange | – | Orange | 33-4121 | Orange | 33-4141 |
| | Black | 33-4102 | Black | 33-4122 | White | 33-4142 |
| | Red | – | Red | 33-4123 | Yellow | 33-4143 USA3 |
| Average | Blue | 33-4104 | Blue | 33-4124 | Red | 33-4144 USA1 |
| | Green | – | Green | 33-4125 | Blue | 33-4145 |
| Smallest | – | – | White | 33-4126 | Green | 33-4146 |
| | – | – | Brown | 33-4127 | Black | 33-4147 |
| | – | – | Yellow | 33-4128 | – | – |

*Note: All S&S Pinion Shaft Gear Kits must be used with 1973–'99 style 24-tooth oil pump drive shaft gear such as S&S part #33-4230.*
**Use this kit when installing an S&S flywheel assembly in a 1990–'99 engine.*

# STEEL ROTARY BREATHER GEARS
## FOR 1936–'84 BIG TWIN

### FITMENT
- 1936–'84 OHV big twins

### FEATURES
- All steel construction–superior dimensional stability, abrasion
- Welded-in screen
- Higher flow than stock
- Elongated breather pocket scavenge hole for increased suction

### OPTIONS
- Standard diameter for replacement or new builds
- +.030" diameter for damaged engines
- Breather gear only kits
- Breather gear and shim kits

S&S exclusive BREATHER VALVE US PATENT 6,899,066



**33-4250**

### BREATHER GEAR KITS FOR 1936–'99 BIG TWIN

| Year of Camshaft | Standard Size | +.030" Oversize |
|---|---|---|
| 1936–Early '47 | **106-6010** | **106-6013** |
| 1948–Early '77 | **33-4253** | **33-4263** |
| Late 1977–'99 | **33-4250** | **33-4260** |

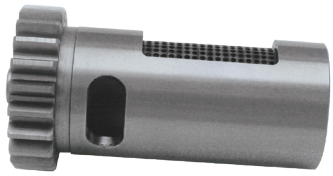

**106-5070**

### BREATHER GEARS ONLY FOR 1936–'99 BIG TWIN

| Year of Camshaft | Standard Size | | +.030" Oversize |
|---|---|---|---|
| 1936–Early '47 | **106-5070** *25300-36* | | **106-6012** |
| 1948–Early '77 | **33-4246** *25313-73* | | **33-4247** |
| Late 1977–'99 | **33-4241** *25310-82A, 25313-77B, 25311-90* | | **33-4242** |



**33-4249**

### BREATHER GEAR SPACING SHIM KIT

| Description | Part # |
|---|---|
| Fits stock 1979–'82 and all S&S® steel breather gears. Includes one of each thickness: *.100", .110", .120", .130", .140", .150", .160", .170"* | **33-4249** |

# GENERATOR STYLE GEARCOVERS

## FOR 1936–'69 OHV BIG TWINS

### FITMENT
- 1936–'62 and 1965–'69 OHV big twins
- Available for stock and S&S crankcases

### FEATURES AND BENEFITS
- Cast gearcovers—stock appearance
- Bushings installed and sized—ready to install

### KIT CONTENTS
- Gearcover assembly
- Gasket and hardware
- Instructions

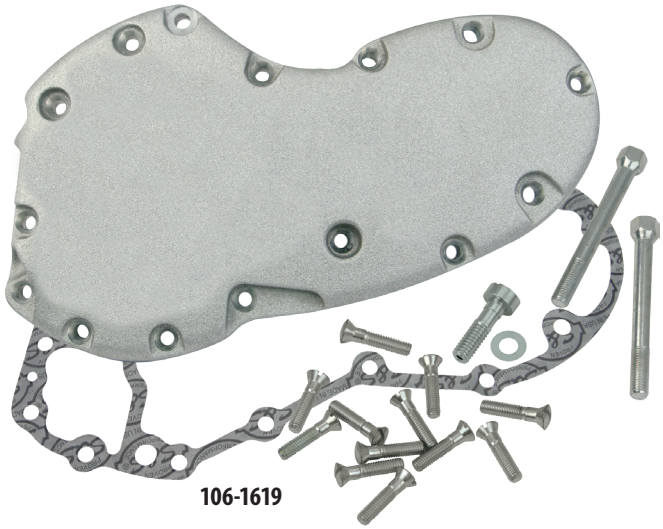

106-1619

**FOR STOCK CRANKCASES—CAST GENERATOR GEARCOVERS**

| Application | Hardware Type | Pinion Bushing I.D. | Distinguishing Characteristics | Part # |
|---|---|---|---|---|
| 1940–early'48 OHV | ¼"-24 | 11⁄16" | 8 Ribs, w/tapped hole for top end oiling, ¼" gen mount holes* | **106-3198** *25216-48* |
| Late 1948–'53 OHV | ¼"-24 | 11⁄16" | 8 Ribs, w/o tapped hole top for end oiling, ¼" gen mount holes* | **106-3499** |
| 1954–'62 OHV | ¼"-24 and ¼"-20 | 9⁄16" | 4 Ribs w/o stock outside oiler passage, 5⁄16" gen mount holes | **31-0240** *25216-58* |
| 1965 OHV | ¼"-24 and ¼"-20 | 9⁄16" | Smooth, w/outside oiler passage, 5⁄16" gen mount holes | **106-1619** |
| 1966–'69 OHV | ¼"-24 and ¼"-20 | 9⁄16" | Smooth w/o outside oiler passage, 5⁄16" gen mount holes w/o 12 o'clock boss | **106-1625** |

**Generator mounting holes must be drilled to 5⁄16" for use with 1958–later generators. Cast generator gearcovers come with countersunk hardware*

**FOR S&S® CRANKCASES—CAST GENERATOR GEARCOVERS**

| Application | Hardware Type | Pinion Bushing I.D. | Distinguishing Characteristics | Part # |
|---|---|---|---|---|
| 1940–'47 OHV | ¼"-24 and ¼"-20 | 9⁄16" | 8 Ribs, w/tapped hole for top end oiling , 5⁄16" gen mount holes | **106-3482** |
| 1954–'64 OHV | ¼"-24 and ¼"-20 | 9⁄16" | 4 Ribs w/o stock outside oiler passage, 5⁄16" gen mount holes* | **31-0240** *25216-58* |
| 1965–'69 OHV | ¼"-24 and ¼"-20 | 9⁄16" | Smooth w/o outside oiler passage, 5⁄16" gen mount holes w/12 o'clock boss | **106-1627** |

*Cast generator gearcovers come with countersunk hardware.*
**A tapped hole on top of the cover can be used to supply oil to the top end–similar to 1936-48 OHV big twins.*

→ REPLACEMENT PARTS: SEE PAGE 185

***NOTE:*** S&S does not offer a direct replacement cover for 1963–'64 engines with outside oilers. However, cover part #106-1619 is functionally compatible, but is not cosmetically correct for those year groups. Stock covers of the four ribbed design, and cover part #106-1619 is a flat-side design.

*All reference to HD® part numbers is for identification purposes only. We in no way are implying that any of S&S Cycle's products are original equipment parts or that they are equivalent to the corresponding HD® part number shown.*

# BILLET GEARCOVERS **GLOSS BLACK NOW AVAILABLE!**
## FOR 1973–'92 BIG TWINS

### FITMENT
- 1973–'92 engines
- S&S alternator style SH-Series engines

### FEATURES AND BENEFITS
- Machined from billet aluminum
- Available gloss black, polished, chrome plated
- Compatible with points or electronic ignition systems

### KIT CONTENTS
- Billet gearcover, billet ignition cover, all gaskets and hardware, installation instructions




**BILLET GEARCOVERS FOR 1973–'92 BIG TWINS**

| Finish | Part # |
|---|---|
| NEW FOR 2020 Gloss Black | **310-0898** |
| Polished USA 1,2,3 | **31-0335** |
| Chrome | **106-4211±** |

± WARNING: Cancer and Reproductive Harm–www.P65Warnings.ca.gov

# CAST GEARCOVERS
## FOR 1973–'84 BIG TWINS

### FITMENT
- 1973–'84 engines

### FEATURES AND BENEFITS
- Flangeless
- Flanged with a chromed billet aluminum cover
- Machined from tough 356-T6 aluminum castings—the same material used to make S&S crankcases
- Inner cast aluminum cover and a decorative bolt-on outer cover
- Both versions will accept either points or electronic ignition systems

### KIT CONTENTS
- Cast gearcover, Gaskets, Mounting Hardware




**CAST GEARCOVERS FOR 1973–84 BIG TWINS**

| Description | Part # |
|---|---|
| Natural—Flangeless Tall | **31-0203** |
| Wrinkle Black—Flangeless Tall | **31-0299** |

# IGNITION COVERS
**GLOSS BLACK NOW AVAILABLE!**

**IGNITION COVER**

| Description | Part # |
|---|---|
| NEW FOR 2020 Gloss Black | **310-0897** |
| Chrome | **31-0332** |

± WARNING: Cancer and Reproductive Harm – www.P65Warnings.ca.gov

# CIRCUIT BREAKER DRIVE GEARS

## GENERATOR CRANKCASE GEAR KIT FOR 1936–69 BIG TWIN ENGINES & CUSTOM ALT/GEN ENGINES

| Description | Part # |
|---|---|
| Standard Clockwise Rotation. | **33-4226** |
| Reverse Counterclockwise Rotation. | **33-4227** |

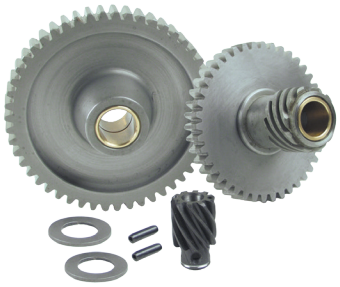

**33-4226**

## CIRCUIT BREAKER DRIVE GEAR ASSEMBLIES FOR 1936–69 BIG TWIN ENGINES

| Description | Part # |
|---|---|
| Standard/Clockwise Rotation. *25850-36A* | **33-4215** |
| Counterclockwise/Reverse Rotation.<br>Requires S&S #33-4208 circuit breaker gear. | **33-4209**± |

*Shims not included*

± ⚠ WARNING: Cancer and Reproductive Harm–www.P65Warnings.ca.gov

## CIRCUIT BREAKER GEARS FOR 1936–69 BIG TWIN ENGINES

| Description | Part # |
|---|---|
| Standard Clockwise Rotation *32531-36* | **33-4217** |
| Reverse Counterclockwise Rotation<br>Requires S&S #33-4209± circuit breaker gear assembly | **33-4208** |
| Roll Pin 7/64" Diameter *255* | **50-8025** |
| Roll Pin 1/8" Diameter | **50-8030** |



**33-4217**

## CIRCUIT BREAKER DRIVE GEAR SHAFT

| Description | Part # |
|---|---|
| Fits 1936–'69 big twin engines. *25856-36* | **31-2037** |

## IDLER GEAR SHAFT

| Description | Part # |
|---|---|
| Fits 1936–'69 big twin engines *25791-36* | **31-2039** |



**31-2039**

## BUSHING

| Description | Part # |
|---|---|
| Fits all S&S® circuit breaker drive and idler gears for 1936–'69 big twin engines | **33-4214** |

## IDLER GEAR ASSEMBLY

| Description | Part # |
|---|---|
| Fits 1936–'69 big twin engines. *(Shims not included.) 25775-36* | **33-4216** |



**33-4214**



**33-4221**

## CIRCUIT BREAKER DRIVE/IDLER GEAR SHIMS

Fits 1936–'69 big twin engines

| Description | Part # |
|---|---|
| .050" Thick | **33-4221** |
| .054" Thick | **33-4222** |
| .058" Thick | **33-4223** |
| .062" Thick | **33-4224** |
| .066" Thick | **33-4225** |

*All reference to HD® part numbers is for identification purposes only. We in no way are implying that any of S&S Cycle's products are original equipment parts or that they are equivalent to the corresponding HD® part number shown.*

# CYLINDERS WITH PISTONS KIT

## FOR 1966–'84 BIG TWINS AND P-SERIES ENGINES




### FITMENT

- 1966–'84 shovel engines
- S&S® Vintage SH-Series and P-Series engines
- Cylinders will not fit OEM panhead engines

### FEATURES AND BENEFITS

- High strength engineering-grade grey cast iron
- Excellent wear resistance
- Durable powder coat finish
- P-Series are silver powder coated

### OPTIONS

- 3⅞", 3⅝", and 3½ bore
- Black or silver powder coat finish
- Available in sets or single front or rear cylinders
- Available fit with your choice of S&S pistons

### CYLINDERS WITH PISTONS KIT

| Displacement | Stroke | Bore | Cylinder Length | Compression Ratio | Part # |
|---|---|---|---|---|---|
| 74" LC | 3³¹⁄₃₂" | 3⅞" | 5.330" | 8.0:1 | **91-9013** |
| 74" HC | 3³¹⁄₃₂" | 3⅞" | 5.330" | 9.0:1 | **91-9012** |
| 80" LC | 4¼" | 3½" | 5.330" | 8.0:1 | **91-9024** |
| 80" HC | 4¼" | 3½" | 5.330" | 9.0:1 | **91-9023** |
| Special Order | Specify | Specify | Specify | Specify | **91-9307*** |

*Cylinders with pistons include cylinders, piston kit, head bolts, base nuts, and head & base gaskets. All piston kits include rings, wristpins, and clips.Recomended Piston Fit: Close: .0035" to .004" Loose: .0045" to .0055"* **Special Order: Download the Special Order Form at sscycle.com/soforms*

### STOCK BORE STROKER CYLINDERS WITH PISTONS KIT

| Displacement | Stroke | Bore | Cylinder Length | Compression Ratio | Part # |
|---|---|---|---|---|---|
| 84" | 4½" | 3⅞" | 5.330" | 8.4:1 | **91-9017** |
| 86" | 4⅝" | 3⅞" | 5.330" | 9.4:1 | **91-9017** |
| 88" | 4¾" | 3⅞" | 5.330" | 10.8:1 | **91-9017** |
| Special Order | Specify | Specify | Specify | Specify | **91-9307*** |

*Cylinders with pistons include cylinders, piston kit, head bolts, base nuts, and head & base gaskets. All piston kits include rings, wristpins, and clips. Recomended Piston Fit: Close: .0035" to .004" Loose: .0045" to .0055" *Special Order: Download the Special Order Form at sscycle.com/soforms*

### 3⅝" BORE STROKER CYLINDERS WITH PISTONS KIT

| Displacement | Stroke | Bore | Cylinder Length | Compression Ratio | Part # |
|---|---|---|---|---|---|
| 88" | 4¼" | 3⅝" | 5.330" | 7.5:1 | **91-9001** |
| 93" LC | 4½" | 3⅝" | 5.405" | 8.5:1 | **91-9101** |
| 93" HC | 4½" | 3⅝" | 5.363" | 9.1:1 | **91-9031** |
| 96" | 4⅝" | 3⅝" | 5.440" | 9.0:1 | **91-9401** |
| 98"* | 4¾" | 3⅝" | 5.530" | 8.9:1 | **91-9201** |
| 103"* | 5" | 3⅝" | 5.630" | 9.7:1 | **91-9302** |
| Special Order | Specify | Specify | Specify | Specify | **91-9307**** |

*Cylinders with pistons include cylinders, piston kit, head bolts, base nuts, and head & base gaskets. All piston kits include rings, wristpins, and clips. Recomended Piston Fit: Close: .0035" to .004" Loose: .0045" to .0055". *Small Diameter Flywheels* ***Special Order: Download the Special Order Form at sscycle.com/soforms*

***NOTES:*** Cylinders for P-Series engines will not fit stock pan cylinder heads. They are machined with a stock shovel head bolt pattern. Cylinders for P-Series engines do not have an internal oil feed passage for top end oiling. Not compatible with stock pan cases or heads.

# CYLINDERS WITH PISTONS KIT
## FOR 1936–'47 OHV BIG TWINS



### FITMENT
- 1936–'47, 74", and 93" knuckle engines
- S&S® Vintage KN-Series engines

### FEATURES AND BENEFITS
- High strength engineering-grade grey cast iron
- Excellent wear resistance
- Durable powder coat finish—high temp gloss black

**3-7⁄16" & 3-5⁄8" BORE CYLINDERS WITH PISTONS KIT FOR 1936–'47 OHV ENGINES**

| Piston Series | Displacement | Stroke | Bore | Cylinder Length | Compression Ratio | Part # |
|---|---|---|---|---|---|---|
| 74 LC Forged | 74" | 3 31⁄32" | 3 7⁄16" | 5.530" | 8:1 | **106-4519** |
| 3 5⁄8" Forged | 93" | 4 1⁄2" | 3 5⁄8" | 5.625" | 8.2:1 | **106-2402** |

*Cylinders with pistons include cylinders, piston kit, and head & base gaskets. All piston kits include rings, wristpins, and clips. Recomended Piston Fit: Close: .0035" to .004" Loose: .0045" to .0055".*

***NOTES:*** S&S® cylinder heads for 1940–'47 OHV big twins are machined for 7⁄16-20 head bolts and are not compatible with stock 7⁄16-16 head bolts. If using S&S heads with 3 7⁄16" bore cylinders, stock style hex head bolts for 1948–'65 big twins, part #106-4523 may be used. S&S 3 5⁄8" bore cylinders require the use of S&S 1966–'84 style 12 point head bolts part #93-3024, due to clearance issues.

Stock 1930–'78 hex style base nut kit is available in cadmium plate, part #106-4522, for 3 7⁄16" bore cylinders only. Stainless raised hex base nuts, part #93-3063-S, are required for 3 5⁄8" bore cylinders.

# CYLINDERS

**3 7⁄16", 3 1⁄2", & 3 5⁄8" BORE CYLINDERS FOR 1966–'84 BIG TWIN—GLOSS BACK**

| Displacement | Bore | Cylinder Sets |
|---|---|---|
| 74", 84", 86", 88' Stock Bore Strokers | 3 7⁄16" | **91-9011** |
| 80", 84" | 3 1⁄2" | **91-9021** |
| 88" | 3 5⁄8" | **91-9000** |
| 93" | | **91-9100** |
| 93"HC | | **91-9030** |
| 96" | | **91-9400** |
| 98" SD† | | **91-9200** |
| 103" SD† | | **91-9300** |
| Special Order | Specify | **91-9307***** |

*†Small Diameter Flywheels **Some early S&S 93" and 96" Sidewinder® Kits were sold with 5.530" length cylinders. Use 91-9200 for replacement cylinders.*
****Special Order: Download the Special Order Form at sscycle.com/soforms.*
*Individual cylinders and cylinder sets without pistons are bored slightly under nominal size and are not honed. Individual cylinder assemblies and cylinder kits with pistons are honed to fit the pistons included.*

**3 7⁄16" & 3 5⁄8" BORE CYLINDERS FOR 1936–'47 OHV ENGINES—HIGH TEMP GLOSS BLACK**

| Displacement | Bore | Cylinder Sets |
|---|---|---|
| 74" | 3 7⁄16" | **106-4512**<br>*16492-41, 16483-41* |
| 93" | 3 5⁄8" | **106-4655** |

*Cylinder set include cylinders, head gaskets, and base gaskets.*

# FORGED PISTON KITS
## FOR 74" AND 80" 1936–'84 OHV ENGINES




### FITMENT
- 74" pistons fit 1936–'78, 74" OHV engines
- 80" pistons fit 1979–'84, 80" big twin engines and may be used in mild stroker engines with 4¼" stroke flywheels

### FEATURES AND BENEFITS
- Forged pistons for superior strength
- Modern alloys and piston skirt profiles for low noise and long engine life
- Dome volume
  - 74 LC = 46cc
  - 74 HC = 57cc
  - 80 LC = 41cc
  - 80 HC = 53cc
- Piston kits include set of pistons, rings, wristpins, and clips

### OPTIONS
- 74"–8:1 or 9:1 compression
- 80"–8:1 or 9:1 compression

S&S will fit these pistons to your existing cylinders *(when purchasing new cylinders, pistons can be fit to them as an option)*

**S&S® STOCK BORE FORGED PISTON SPECIFICATIONS**

| Displacement | Bore | Stroke | Compression Ratio | Piston Deck Height |
|---|---|---|---|---|
| 74" | 3⅞" | 3³¹⁄₃₂" | 8:1 and 9:1 | 1.436" |
| 80" | 3½" | 4¼" | 8:1 and 9:1 | 1.270" |

*Recommended Piston Fit Close: .003" - .0035" Loose: .004" - .005"*

**FORGED 74" PISTONS**

| Oversize | Deck Height | 8:1 Compression | 9:1 Compression |
|---|---|---|---|
| Standard (3⅞") | 1.436" | **106-5495** *22101-41, 22101-48* | **106-5503** |
| +.010" | 1.436" | **106-5496** *22103-48, 22103-41* | **106-5504** |
| +.020" | 1.436" | **106-5497** *22104-48, 22104-41* | **106-5505** |
| +.030" | 1.436" | **106-5498** *22105-48, 22105-41* | **106-5506** |
| +.040" | 1.436" | **106-5773** *22106-48, 22106-41* | **106-5775** |

**REPLACEMENT RINGS FOR 74"**

| Oversize | Part # |
|---|---|
| Standard (3⅞") | **94-2200X** *22325-55B, 22355-53, 22355-48, 22355-41* |
| +.010" | **94-2201X** *22327-55B, 22357-48, 22357-41* |
| +.020" | **94-2202X** *22328-55B, 22358-53, 22358-48, 22358-41* |
| +.030" | **94-2203X** *22329-55B, 22359-48, 22359-41* |
| +.040" | **94-2204X** *22330-55B, 22360-48, 22360-41* |

**FORGED 80" PISTONS**

| Oversize | Deck Height | 8:1 Compression | 9:1 Compression |
|---|---|---|---|
| Standard (3½") | 1.270" | **106-5511** | **106-5519** |
| +.010" | 1.270" | **106-5512** | **106-5520** |
| +.020" | 1.270" | **106-5513** | **106-5521** |
| +.030" | 1.270" | **106-5514** | **106-5522** |

**REPLACEMENT RINGS FOR 80"**

| Oversize | Part # |
|---|---|
| Standard (3½") | **94-2206X** *22334-78A, 22334-78B, 21920-83* |
| +.010" | **94-2207X** *22335-78A, 22335-78B, 21922-83* |
| +.020" | **94-2208X** *22336-78B, 21923-83* |
| +.030" | **94-2209X** *22337-78B, 21924-83* |

***NOTES:*** Since many older motorcycles have been modified, be sure to confirm that your engine is still stock before ordering replacement pistons.

Using 80" pistons with 74" (3³¹⁄₃₂" stroke) flywheels will result in very low compression and poor performance. Using 74" pistons with 80" (4¼" stroke) flywheels will result in contact between piston and cylinder head, and potential engine damage.

**REPLACEMENT WRISTPINS AND KEEPERS**

| Description | | Part # |
|---|---|---|
| Wristpin .791" diameter | | **106-6123** |
| Wristpin keeper, c-clip | *each* | **94-9254-S** |
| | *4 pack* | **94-9254** |

# FORGED STOCK BORE STROKER PISTONS
## FOR 1936–'84 OHV ENGINES

### FITMENT
- 84", 86", and 88" stroker engines for 1936–'84 OHV engines

### FEATURES AND BENEFITS
- Forged pistons for superior strength
- Modern alloys and piston skirt profiles for low noise and long engine life
- Dome volume 50cc
- Piston kits include set of pistons, rings, wristpins, and clips

S&S will fit these pistons to your existing cylinders *(when purchasing new cylinders, pistons can be fit to them as an option)*




| S&S FORGED STOCK BORE STROKER PISTON SPECIFICATIONS | | | | | |
|---|---|---|---|---|---|
| Displacement | Bore | Stroke | Compression Ratio | | Piston Deck Height |
| | | | Standard | LC | |
| 84" | 3⅞" | 4½" | 8.1:1 | 7.3:1 | 1.100 |
| 86" | 3⅞" | 4⅝" | 9.4:1 | 8.1:1 | |
| 88" | 3⅞" | 4¾" | 10.8:1 | 9.1:1 | |
| *Recommended Piston Fit Close: .003"—.0035" Loose: .004"—.005"* | | | | | |

### FORGED STOCK BORE STROKER PISTONS

| Oversize | Standard | Low Compression |
|---|---|---|
| Standard (3⅞") | **106-5527** | **920-0073** |
| +.010" | **106-5528** | **920-0075** |
| +.020" | **106-5529** | **920-0077** |
| +.030" | **106-5530** | **920-0079** |
| +.040" | **106-5777** | **920-0081** |
| +.050" | **106-5778** | **920-0083** |
| +.060" | **106-5779** | **920-0085** |
| +.070" | **106-5780** | **920-0087** |
| +.080" | **106-5781** | **920-0089** |
| +.090" | **106-5782** | **920-0091** |

***NOTE:*** When ordering pistons for a shovel engine, please keep in mind that these pistons are sized by 3⅞" standard bore for a 74" engine. If using 80" cylinders standard bore is 3½" or 3⅞" +.060".

### REPLACEMENT RINGS FOR FORGED STOCK BORE STROKER PISTONS

| Oversize | Part # |
|---|---|
| Standard (3⅞") | **94-2200X**<br>*22325-55B, 22355-53, 22355-48, 22355-41* |
| +.010" | **94-2201X**<br>*22327-55B, 22357-48, 22357-41* |
| +.020" | **94-2202X**<br>*22328-55B, 22358-53, 22358-48, 22358-41* |
| +.030" | **94-2203X**<br>*22329-55B, 22359-48, 22359-41* |
| +.040" | **94-2204X**<br>*22330-55B, 22360-48, 22360-41* |
| +.050" | **94-2205X** |
| +.060" | **94-2206X**<br>*22334-78A, 22334-78B, 21920-83* |
| +.070" | **94-2207X**<br>*22335-78A, 22335-78B, 21922-83* |
| +.080" | **94-2208X**<br>*22336-78B, 21923-83* |
| +.090" | **94-2209X**<br>*22337-78B, 21924-83* |

### REPLACEMENT WRISTPINS AND KEEPERS

| Description | | Part # |
|---|---|---|
| Wristpin .791" diameter | | **106-6123** |
| Wristpin keeper, c-clip | *each* | **94-9254-S** |
| | *4 pack* | **94-9254** |

*All reference to HD® part numbers is for identification purposes only. We in no way are implying that any of S&S Cycle's products are original equipment parts or that they are equivalent to the corresponding HD® part number shown.*

# FORGED 3-5/8" BORE PISTONS
## FOR 1936–'84 OHV ENGINES


106-5535

### FITMENT
- 88", 93", 96", 98" and 103" engines for 1936–'84 OHV big twins

### FEATURES AND BENEFITS
- Forged pistons for superior strength
- Modern alloys and piston skirt profiles for low noise and long engine life
- Dome volume 30cc
- Piston kits include set of pistons, rings, wristpins, and clips

### OPTIONS
- Available in 3⅜" Standard. +.010", .020", .030", and .060"oversizes

S&S will fit these pistons to your existing cylinders *(when purchasing new cylinders, pistons can be fit to them as an option)*

**S&S® 3⅜" BORE FORGED PISTON APPLICATION CHART**

| Displacement | Wristpin Deck Height | Stroke | Flywheel Diameter | Compression Ratio | Cylinder Length | |
|---|---|---|---|---|---|---|
| | | | | | SH-Series & P-Series Engines | KN-Series Engines |
| 88" | 1.260" | 4¼" | 8½" | 7.5:1 | 5.330" | – |
| 93" | 1.260" | 4½" | 8½" | 8.5:1 | 5.405" | 5.625" |
| 93" HC | 1.260" | 4½" | 8½" | 9.1:1 | 5.363" | – |
| 96" | 1.260" | 4⅝" | 8½" | 9.1:1 | 5.440" | – |
| 98" | 1.260" | 4¾" | 8½" | 8.9:1 | 5.530" | – |
| 103" | 1.260" | 5" | 8¼" | 9.7:1 | 5.630" | – |

**FORGED 3⅜" BORE PISTON SETS FOR 1936–'84 OHV BIG TWINS**

| Oversize | Wristpin Deck Height | Part # |
|---|---|---|
| Standard (3⅜") | 1.260" | **106-5535** |
| +.010" | 1.260" | **106-5536** |
| +.020" | 1.260" | **106-5537** |
| +.030" | 1.260" | **106-5538** |
| +.060" | 1.260" | **106-5789** |

*Recommended Piston Fit Close: .003" - .0035" Loose: .004" - .005"*

***NOTE:*** Compression ratios will change when replacing existing pistons in S&S engines with this series of forged pistons. If higher compression is desired, we suggest shortening cylinders, or decking heads to achieve the desired compression ratio. A change of .060" will produce approximately 1 point of change in the compression ratio.

**REPLACEMENT RINGS FOR FORGED 3⅜ BORE PISTONS**

| Oversize | Part # |
|---|---|
| Standard (3⅜") | **94-1220X** |
| +.010" | **94-1221X** |
| +.020" | **94-1222X** |
| +.030" | **94-1223X** |
| +.060" | **94-1226X** |

**REPLACEMENT WRISTPINS AND KEEPERS**

| Description | | Part # |
|---|---|---|
| Wristpin .791" diameter | | **106-6123** |
| Wristpin keeper, c-clip | *each* | **94-9254-S** |
| | *4 pack* | **94-9254** |

# REPLACEMENT PISTON RINGS FOR UL CYLINDERS

### REPLACEMENT RINGS FOR CAST PISTON KITS

| Oversize | Part # |
|---|---|
| Standard (3⅞") | **940-0006** |
| +.010" | **940-0007** |
| +.020" | **940-0008** |
| +.030" | **940-0009** |
| +.040" | **940-0010** |
| +.060" | **940-0011** |



# REPLACEMENT FORGED STROKER PISTONS
## FOR 1972–'85 HARLEY-DAVIDSON® IRONHEAD SPORTSTER®



**106-5544**

### FEATURES AND BENEFITS

- 3⅜" bore stroker pistons are designed to be used in conjunction with S&S 4⅝" stroke flywheels to convert 1000cc Ironhead engines in 1972–'85 Harley-Davidson® Sportster® models to 1200cc (74") displacement.
- Can also be used to replace pistons in older S&S stroker engines with 4⅛", 4⅜", 4½", and 4¹³⁄₁₆" stroke flywheels. All clearances must be checked. See chart below for displacements and compression ratios. These pistons are normally used in stock Harley-Davidson® cylinders. No cylinders are available from S&S for Ironhead Sportster models.
- Piston kits include rings and keeper buttons.

### STROKER PISTONS SPECIFICATIONS FOR 1972–'85 HARLEY-DAVIDSON® IRONHEAD SPORTSTER® MODELS

| Displacement | 71" | 72" | 73" | 74" | 77" * |
|---|---|---|---|---|---|
| Stroke | 4⅞" | 4½" | 4⅜" | 4⅝" | 4¹³⁄₁₆" |
| Cylinder Length | 5.330" | 5.330" | 5.330" | 5.330" | 5.330" |
| Compression | 7.5:1 | 8:1 | 8.5:1 | 9:1 | 9:1 |

**Requires ⅛" base plates and small diameter flywheels.*

### STROKER PISTONS KITS FOR 1972–'85 HARLEY-DAVIDSON® IRONHEAD SPORTSTER® MODELS

| Oversize | Deck Height | Part # |
|---|---|---|
| +.010 | .806" | **106-5542** |
| +.020 | .806" | **106-5543** |
| +.030 | .806" | **106-5544** |
| +.060 | .806" | **106-5791** |

*Recommended Piston Fit: Close: .0030"-.0035" Loose: .0045"-.0055"*

### REPLACEMENT MOLY FACED RINGS FOR 1972–'85 HARLEY-DAVIDSON® IRONHEAD SPORTSTER® MODELS

| Oversize | Part # |
|---|---|
| +.010 | **94-3201X** |
| +.020 | **94-3202X** |
| +.030 | **94-3203X** |
| +.040 | **94-3204X** |
| +.060 | **94-3206X** |

### REPLACEMENT WRISTPINS AND BUTTONS

| Description | | Part # |
|---|---|---|
| Wristpin .791" diameter | | **94-9350** |
| Keeper Buttons | *4 pack* | **94-9351** |

***NOTE:*** If replacing the pistons in a older 77" stroker engine, stroker plates are required, and all clearances must be checked.

# SUPER STOCK™ CYLINDER HEADS
## FOR 1966–'84 BIG TWIN ENGINES

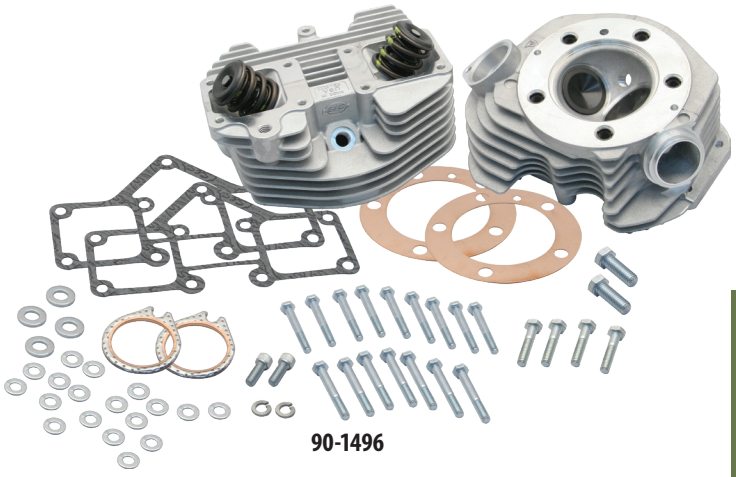

90-1496

### FITMENT
- 1966–'84 big twins
- SH-Series engines

### FEATURES AND BENEFITS
- Stock appearance and improved performance
- S&S .590" lift valve springs
- Fits stock intake manifolds and exhaust pipes
- Rocker cover fastened with 5⁄16"-18 hex-head cap screws

### OPTIONS
- Stock bore or 3⅝" bore
- O-ring or rubber band style manifold
- Natural aluminum or wrinkle black powder coat finish
- Dual spark plugs and/or external oil return lines by special order

### KIT CONTENTS
- Front and rear assembled cylinder heads complete with valves and .590" springs
- Head, rocker and exhaust gaskets
- Mounting hardware and instructions

→ REPLACEMENT PARTS: SEE PAGE 190

**CYLINDER HEAD KITS FOR 1966–'84 BIG TWIN ENGINES**

| Engine Year and Type | Bore | Aluminum Finish | Wrinkle Black |
|---|---|---|---|
| 1966–'78 (O-ring) | Stock | **90-1496** | **90-1596** |
| | 3⅝" | **90-1497** | **90-1597** |
| | 3⅝" Dual Plug | **90-1491** | – |
| 1979–'84 (Band) | Stock | **90-1498** | **90-1598** |
| | 3⅝" | **90-1499** | – |
| | 3⅝" Dual Plug | **90-1488** | – |
| Special Order* | Specify | **90-1490*** | **90-1490*** |

**Use this special order part number to order assembled or unassembled cylinder heads with spring options, and special finish. Front or rear heads available by special order. Download the Special Order Form at sscycle.com/soforms*

DISCLAIMER: NOT LEGAL FOR SALE OR USE IN CALIFORNIA ON ANY POLLUTION CONTROLLED MOTOR VEHICLE. Not legal for sale or use on any EPA pollution controlled motor vehicle.

# REPLACEMENT CYLINDER HEADS
## FOR P-SERIES ENGINES & RETRO CONVERSION KITS

S&S exclusive CYLINDER HEADS US PATENT PENDING

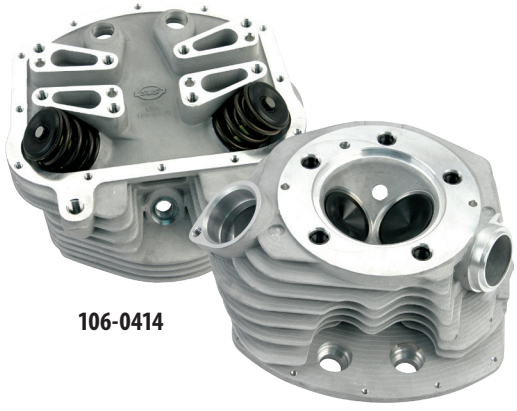

106-0414

### FITMENT
- P-Series engines
- 1966–'84 big twins
- Valve train update kit—available through Special Order

### FEATURES AND BENEFITS
- S&S .590" lift valve springs
- Late style valve chamber eliminates oil pooling
- Cooling channel between combustion chamber and rocker arms

### OPTIONS
- Stock bore or 3⅝" bore
- Dual spark plug available for 3⅝" bore and special order
- Stock pan bolt pattern available through special order

### KIT CONTENTS
- Front and rear cylinder head complete with valves and springs
- Head, pan, and exhaust gaskets

→ REPLACEMENT PARTS: SEE PAGE 188

***NOTE:*** These are not service part cylinder heads for panhead engines. They will not fit on stock panhead cylinders.

**REPLACEMENT CYLINDER HEADS FOR S&S® P-SERIES ENGINES AND RETRO CONVERSION KITS**

| Description | Complete Kit (with Valves and Springs) |
|---|---|
| Stock Bore | **106-0414** |
| 3⅝" Bore | **106-0417** |
| 3⅝" Bore Dual Plug | **106-0420** |

# ALUMINUM CYLINDER HEADS
## FOR 1937–'48 FLATHEAD SIDE-VALVE BIG TWIN ENGINES



### FITMENT
- 1936 V model engines
- 1937–'48 U model engines

### FEATURES AND BENEFITS
- Precision cast aluminum construction for better cooling
- Nine head bolt pattern

### OPTIONS
- Available compression ratios: 5.5:1, 6:1, 6.25:1, and 7:1 (80")
- 14mm or 18mm spark plug hole

### KIT CONTENTS
- Front and rear cylinder heads
- Copper head gaskets
- Head bolts NOT included

**ALUMINUM CYLINDER HEADS FOR UL AND ULH MODELS**

| Description | Part # |
|---|---|
| Set *16671-36, 16661-40* | **106-2475*** |

**Special Order: Download the Special Order Form at sscycle.com/soforms*

# CYLINDER HEADS
## FOR 1940–'47 OHV BIG TWIN ENGINES



### FITMENT
- KN-Series engines
- 1940–'47 OHV big twins
- 1936–'39 with a manifold upgrade

### FEATURES AND BENEFITS
- Made of engineering-grade grey iron—better heat dissipation, less sound transfer
- Durable stock-look black powder coat finish
- Counter bore for 61" cylinder fire ring
- Set up for o-ring manifold or late style port plumber fittings
- 1.940" intake and 1.750" exhaust valve
- Valve springs allow cams with up to .480" lift
- Compatible with stock or S&S valve cover "tins"

### OPTIONS
- Fully assembled or unassembled
- Fully assembled with valves, rocker arms, tins and housings complete
- Guides installed for use with S&S® Vintage tins (valves ground)
- Guides not installed for use with stock tins (valves not ground)
- 14mm or 18mm spark plug hole

→ REPLACEMENT PARTS: SEE PAGE 190

**CYLINDER HEADS**

| Description | Part # |
|---|---|
| Fully assembled heads | **106-4929*** |

***NOTE:*** Stock 1948–'65 head bolts can be used in stock bore applications and are available on ***page 149***, big bore applications must use the S&S 12 point head bolt also found on ***page 149***.

# HEAD BOLT KITS FOR 1948–'84 BIG TWIN ENGINES

### HEAD BOLT KITS FOR 1948–'84 BIG TWIN ENGINES

| Description | | Part # |
|---|---|---|
| 1948–'84 Panhead & Shovelhead & 3⅝" Bore KN-Series Head Bolt Kit *6469HW* 7/16"-20 x 2⅜" 12 pt stainless steel bolt #93-3025 washers. | | **93-3024** |
| Stock Bore KN-Series & Stock Panhead *16814-48* Head Bolt Kit 7/16"-20 x 2⅜" Hex cad plated bolt #106-4523 washers. | | **106-4523** |
| Oil Bypass Plug *(Included with all S&S® stock bore shovelhead style cylinders)* | *each* | **93-1032-S** |
| | *2 pack* | **93-1032** |



**106-4523**



**93-3024**

*Shown: 1 bolt and washer. Kit includes 10 of each.*

# CYLINDER HEAD & MOTOR MOUNTS

### CYLINDER HEAD AND MOTOR MOUNTS

| Description | Part # |
|---|---|
| Complete Kit for 1948–'84 Big Twin—Fits panhead and shovelhead engines with cylinders up to 5.750" long *16852-67A, 16853-48* | **93-4057** |
| Screw,HHC,7/16-20 x 1-¼" *4726* | **50-0176** |
| Nut, Lock, HH, 7/16-20, Steel/Nylon *7825* | **50-5045** |
| Washer, Flat, .469" x .922" x .125", Zinc, Steel *6495HW* | **50-7064** |

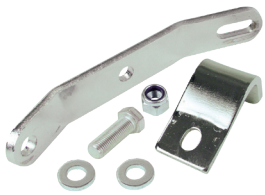

**93-4057**

# CYLINDER BASE NUTS & STUDS

### CYLINDER BASE NUTS AND STUDS

| Fitment | Description | | Part # |
|---|---|---|---|
| Cylinder Base Studs 1930–'84 Big Twin | Stock length base stud—Fits 61", 74", and 80" OHV and SV models 2.030" overall length *16831-30, 16837-30* | *each* | **31-2328-S** |
| | | *8 pack* | **31-2328** |
| | Extra long base stud—5/16" longer than late stock studs 2.390" overall length *16837-78* | *each* | **31-2324-S** |
| | | *8 pack* | **31-2324** |
| *NOTE: This leaves approximately 1.400" above the base gasket surface with 1" of crankcase thread engagement* | | | |
| Base Nuts 1930–'78 Big Twin (stock bore only) | Base Nut Kit—Cadmium plated, includes lock washers | *8 pack* | **106-4522** |
| *NOTE: This leaves approximately 1.400" above the base gasket surfaces with 1.125" of crankcase thread engagement* | | | |
| Base Nuts 1966–'84 Big Twin | Stainless 7/16" hex allows the use of box end wrench to tighten base nuts on S&S Sidewinder® cylinders for shovelhead engines. Requires .375"–.400" stud engagement—stud height may need to be adjusted | *each* | **93-3063-S** |
| | | *8 pack* | **93-3063** |



**31-2328-S**



**31-2324-S**



**93-3063-S**



*Showing 1 nut & washer. Kit includes 8 of each*

**106-4522**

*All reference to HD® part numbers is for identification purposes only. We in no way are implying that any of S&S Cycle's products are original equipment parts or that they are equivalent to the corresponding HD® part number shown.*

# HYDRAULIC VALVE TRAIN CONVERSION KIT
## FOR SHOVELHEAD ENGINES

### FITMENT
- 1966–'84 big twins
- 1953–'65 engines using shovel cylinders and P-Series heads or engines using P-Series valve train update kits

### FEATURES AND BENEFITS
- Quiet, dependable hydraulic valve train
- Through the pushrod or external oiling options
- Easy pushrod installation and removal
- Wide selection of late style cams to choose from

### OPTIONS
- Kit for use with S&S roller rocker arms for oiling through pushrods
- Kit for use with stock style rocker arms for oiling through external oil line

### KIT CONTENTS
- Polished billet tappet guides
- Four 1984–'99 style tappets w/$HL_2T$ kit
- Set of Quickee Adjustable pushrods
- Pushrod cover keepers
- Required hardware and gaskets



**33-5452**

**HYDRAULIC VALVE TRAIN CONVERSION KIT FOR SHOVELHEAD ENGINES**

| Description | Part # |
|---|---|
| For use with S&S roller rocker arms. | **33-5451** |
| For use with stock shovelhead style rocker arms | **33-5452** |

**REPLACEMENT PARTS**

| Description | | Part # |
|---|---|---|
| Quickee Adjustable Pushrods for 74"–103" Shovels | For S&S Rocker Arms *(oil through pushrods)* | **93-5123** |
| | For Stock Rocker Arms *(oil through external oil lines)* | **93-5134** |
| Billet Tappet Guides—Polished | Set | **33-5450±** |
| | Front | **33-5450F±** |
| | Rear | **33-5450R±** |
| Tappets USA 1,2,3 | Without $HL_2T$ Kit *(Set of four)* *18523-86A* | **33-5352** |
| | With $HL_2T$ Kit *(Set of four)* | **33-5353** |

± WARNING: Cancer and Reproductive Harm–www.P65Warnings.ca.gov

***NOTES:*** 1984–'99 cams must be used with this kit to ensure correct valve timing. These cams are not included with the kit. Refer to ***page 133*** for S&S camshaft recommendations to be used with this kit. If sourcing cams from another manufacturer, note that timing specifications will be unchanged, but the actual lift will be about 9% lower than specified due to the difference in rocker arm ratio.

S&S billet tappet guides for shovelhead engines are similar in design to S&S tappet guides for 1984–'99 big twin engines. For that reason, they are not a direct replacement for stock parts, but must be used in conjunction with S&S tappets and cams for 1984–'99 big twin engines. Tappet bore geometry is corrected to compensate for the difference in pushrod angles between the engine types in order to maintain specified valve event timing. When selecting a cam, keep in mind that timing specifications will be the same as shown for 1984–'99 engines, but there will be about a 9% reduction in valve lift due to the lower shovelhead rocker arm ratio.

# TAPPET ASSEMBLIES

## FITMENT
- 1953–'84 bt

## FEATURES AND BENEFITS
- Precision machined tappets complete with premium hydraulic units
- Save money by resusing worn stock tappet guides with +.003" oversize



**HYDRAULIC TAPPET ASSEMBLIES—4 PACK**

| | |
|---|---|
| Standard | **330-0380** |
| +.003" Oversized | **330-0381** |

# HYDRAULIC TAPPET COMPONENTS

## FITMENT
- 1953–'84 bt

## FEATURES AND BENEFITS
- Same quality components used in S&S tappet assemblies
- Compatible with stock tappets



**330-0377**



**330-0384**

**HYDRAULIC TAPPET COMPONENTS**

| | | |
|---|---|---|
| Tappet Body—Standard | *each* | **330-0384** |
| Tappet Body - +.003" | *each* | **330-0385** |
| Hydraulic Insert | *each* | **330-0379** |
| Tappet Rollers* | *4 pack* | **330-0377** |

**Fits 1929–'56 Side Valve bt, 1936-'84 OHV big twins, and 1957–'85 Ironhead Sportster® models*

# TAPPET GUIDES
## FOR KNUCKLEHEAD ENGINES

## FITMENT
- 1936–'47 knucklehead and S&S® KN-Engines

## FEATURES AND BENEFITS
- Cast iron
- Mounting hardware and gaskets included

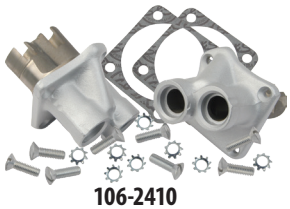

**106-2410**

**TAPPET GUIDES FOR KNUCKLEHEADS**
**1936–47 KNUCKLEHEAD AND S&S® KN ENGINES**

| Description | Part # |
|---|---|
| Tappet, Set, Standard | **106-2410** |
| Front only *18600-36* | **106-2665** |
| Rear only *18610-36* | **106-2666** |

# TAPPETS
## FOR KNUCKLEHEAD ENGINES

## FITMENT
- 1936–'47 knucklehead and S&S® KN-Engines

## FEATURES AND BENEFITS
- Includes lifter body wrench flat
- Includes adjusting screw and nut

**TAPPETS FOR KNUCKLEHEADS**

| Description | | | Standard | +.005" |
|---|---|---|---|---|
| Tappet Set | | *4 pack* | **106-1819** | **106-1820** |
| Tappet Assembly | Intake | *each* | **106-1815** *18491-36* | **106-1816** |
| | Exhaust | *each* | **106-1817** *18493-36* | **106-1818** |



**106-1819**

# QUICKEE ADJUSTABLE PUSHRODS

## FEATURES AND BENEFITS

- Can be installed or removed from an assembled engine

### QUICKEE ADJUSTABLE PUSHRODS

| Application | Displacement | Part # |
|---|---|---|
| 1966–'84 bt*(S&S Rocker Arms) | 74"-103" | **93-5123** |
| 1966–'84 bt*(Stock Rocker Arms) | 74"-103" | **93-5134** |

**S&S tappet guide, S&S 1984-'99 style tappets*



**93-5123**

**WATCH THE S&S PUSHROD INSTALLATION VIDEO AT WWW.SSCYCLE.COM/VIDEOS**

***NOTES:*** S&S Quickee Adjustable pushrods are designed for use with 1984–up hydraulic tappets. They are not compatible with stock or aftermarket hydraulic tappets for shovelhead engines or most solid style tappets.

See ***page 150*** for more information on S&S hydraulic valve train conversion kits, and see ***page 158*** for more info on S&S roller rocker arms.

# PUSHROD KITS

## FOR 1966–'84 BIG TWIN ENGINES

## FEATURES AND BENEFITS

- 7⁄16" Chromoly steel tubing for maximum strength
- Reduced pushrod flex for precise valve control at high rpm
- Solid lifter conversion kits replace troublesome hydraulic tappets

***NOTE:*** If using S&S tappet guides for shovelhead engines, see S&S Quickee Adjustable pushrods.



**93-5067**

### ADJUSTABLE PUSHROD KITS FOR 1966–'84 BIG TWIN WITH SOLID LIFTER ADAPTERS

*INCLUDES ADAPTERS FOR CONVERTING 1953–'84 STYLE HYDRAULIC LIFTERS TO NON-ADJUSTABLE SOLIDS.*

| Cylinder Length | 5.330" (Stock) | 5.405" (+ 1⁄16") | 5.530" (+ 3⁄16") | 5.630" (+ 5⁄16") |
|---|---|---|---|---|
| Part # | **93-5067** | **93-5014** | **93-5015** | **93-5016** |



### NON-ADJUSTABLE PUSHROD KITS FOR 1966–'84 BIG TWIN WITH ADJUSTABLE LIFTER ADAPTERS

*INCLUDES ADAPTERS FOR CONVERTING 1953–'84 STYLE HYDRAULIC LIFTERS TO ADJUSTABLE SOLIDS. ADJUSTER SCREW IN THE LIFTER ADAPTERS.*

| Cylinder Length | 5.330" (Stock) |
|---|---|
| Part # | **93-5068** |

## PUSHROD KIT ONLY—FOR SOLID LIFTERS WITH 1948–'52 SOLID ADJUSTABLE LIFTERS

- Fits 1966–'84, 74", & 80" Shovelhead Engines
- Includes four non-adjustable steel pushrods. *(Pushrods are identical to those used in kit part #93-5068.)*
- Recommended for all shovelhead and shovelhead top/panhead bottom engines with 1948–'52 style lifters

### NON-ADJUSTABLE PUSHROD KITS FOR 1966–'84 BIG TWIN

*PUSHRODS FOR USE WITH 1948–'52 STOCK STYLE SOLID ADJUSTABLE LIFTERS.*

| Cylinder Length | 5.330" (Stock) |
|---|---|
| Part # | **93-5069** |



## SERVICE PART PUSHROD KIT WITH HYDRAULIC LIFTERS

- Fits 1966–'84, 74", & 80" Shovelhead Engines
- Includes four adjustable steel pushrods. Stock adjusting screws *(not included)* must be used in these pushrods.

### ADJUSTABLE PUSHROD KITS FOR 1966–'84 BIG TWIN

*FOR HYDRAULIC LIFTERS. SERVICE PARTS FOR 1966–'84.*

| Cylinder Length | 5.330" (Stock) |
|---|---|
| Part # | **93-5070** *17904-66* |



# PUSHROD KITS
## FOR 1948–'65 BIG TWIN ENGINES

- Converts valve train to solid lifter operation
- Includes all parts needed for conversion




**PUSHROD KITS FOR 1948–'65 BIG TWIN** NON-ADJUSTABLE PUSHRODS WITH ADJUSTABLE LIFTER ADAPTERS

INCLUDES ADAPTERS FOR CONVERTING 1953–'84 STYLE HYDRAULIC LIFTERS TO ADJUSTABLE SOLIDS.

| Cylinder Length | | Part # |
|---|---|---|
| 5.205" | (Stock 61") | **93-5081** |
| 5.330" | (Stock 74") | **93-5058** |
| 5.405" | (+ 1⁄16") | **93-5082** |
| 5.530" | (+ 3⁄16") | **93-5084** |

### SOLID LIFTER PUSHROD KIT—FOR 1948–'52, 61" & 74" PANHEAD ENGINES

- Converts stock 1948–'52 valve train to solid lifter operation.
- Requires stock 1948–'52 style adjustable lifters.
- Pushrods are identical to those used in kit part #93-5058. See above.




**NON-ADJUSTABLE PUSHROD KITS FOR 1948–'52 BIG TWIN** PUSHRODS ONLY

SOLID LIFTER CONVERSION PUSHRODS FOR 1948–'52 STOCK ADJUSTABLE LIFTERS. SET OF FOUR

| Cylinder Length | | Part # |
|---|---|---|
| 5.205" | (Stock 61") | **93-5029** |
| 5.330" | (Stock 74") | **93-5059** *17905-53B* |

### SERVICE PART PUSHROD KIT—FOR 1953–'65 PANHEAD ENGINES WITH HYDRAULIC LIFTERS

- Includes four adjustable pushrods

**MUST USE ORGINAL ADJUSTING SCREW (NOT SUPPLIED)**



**ADJUSTABLE PUSHROD KITS FOR 1953–'65 BIG TWIN** STOCK REPLACEMENT PUSHROD KITS

ADJUSTABLE PUSHROD KITS FOR HYDRAULIC LIFTERS.

| Cylinder Length | | Part # |
|---|---|---|
| 5.330" | (Stock 74") | **93-5091** |

# PUSHROD KITS
## FOR 1936–'47 BIG TWIN ENGINES

- Solid Lifter Pushrod Kit
- Fits 1936–'47, 61", 74" & 93" Knucklehead Engine
- Requires stock-style adjustable tappets
- Includes four aluminum non-adjustable pushrods
- The increase expansion of aluminum provides a quieter valve train



**PUSHROD KITS FOR 1936–'47 BIG TWIN** NON-ADJUSTABLE PUSHRODS KITS

SOLID LIFTER PUSHRODS FOR 1948–'52 STOCK ADJUSTABLE LIFTERS

| Cylinder Length | Part # |
|---|---|
| 5.530" (Stock 74") | **930-0008** *17905-36* |
| 5.625" (KN93") | **930-0009** |

# TIME-SAVER ADJUSTABLE PUSHRODS

## FEATURES AND BENEFITS

- Eliminates the need to disassemble the top end and remove the rocker arms to change pushrods or camshafts
- Reduce installation time by 75%—Hence the name Time Saver
- Larger 9mm diameter chrome moly tubing provides superior strength and minimizes pushrod flex
- Single adjuster end provides pushrod lengths from 9.5" to 11.5" for stock height and taller engines
- Kit includes set of four pushrods and installation instructions
- Not compatible with stock shovelhead hydraulic tappets, but will work with tappets having ⅜" diameter cup



### TIME-SAVER ADJUSTABLE PUSHRODS

| Description | Part # |
|---|---|
| Pushrod Set | **930-0052** |

# ADJUSTABLE CHROMOLY STEEL PUSHRODS

- Adjustable chromoly steel pushrods for 1966–'84 big twins
- Compatible with S&S or original equipment hydraulic tappets
- Set of four pushrods



### ADJUSTABLE CHROMOLY STEEL PUSHRODS

| Description | Part # |
|---|---|
| Pushrod Set | **930-0051** |

# SOLID LIFTER CONVERSION KIT

## FOR 1953–'84 PANHEAD AND SHOVELHEAD ENGINES

- Hardened steel adapters, in place of stock hydraulic units in 1953–'84 lifters
- Use with stock adjustable pushrods



### SOLID LIFTER CONVERSION KIT

| Description | Part # |
|---|---|
| Kit includes four adapters | **33-5348** |
| each | **33-5336** |

# PUSHROD COVERS & RELATED REPLACEMENT PARTS

S&S pushrod cover kits include all of the parts required for four pushrods, except keepers. Keepers are not included because of different length requirements of some engines, but are available separately. Pushrod covers and pushrod keepers are available for 1936–up big twin engines and 1986–'90 Harley-Davidson® Sportster® models. Consult the chart below for the pushrod keepers you require. Sold in kits of four assemblies; enough for one engine.



93-4040

## PUSHROD COVER KITS

*Includes top and bottom covers, cover cap, cover spring, and spring washer for four pushrods.*

| Description | Part # |
|---|---|
| 1979–'84 big twin engines *(o-ring style bottom cover)* | **93-4040** |
| KN-Series & 1936–'47 OHV big twin engines *17939-36* | **106-3949** |

***NOTE:*** Keepers and o-ring kits are available but must be purchased separately.

## PUSHROD COVER PARTS

| Description | Part # |
|---|---|
| Top Cover 1966–up big twin *17935-66T, 17935-79B* | **93-4016** |
| Top Cover KN-Series &1936–'47 OHV big twin *17935-36* | **106-3850** |
| Bottom Cover 1979–'84 big twin | **93-4029-S** |
| Bottom Cover KN-Series & 1936–'47 OHV big twin *17983-40* | **106-3851** |
| Cover Cap 1936–up big twin, 1957–'90 Sportster® *17945-36B* | **93-4017** |
| Cover Spring 1936–up big twin, 1957–'90 Sportster® *17947-36* | **93-4018** |
| Cover Cap Washer *6762B* | **50-7131** |
| Bottom Cover Washer *6737* | **50-7150** |
| Pushrod O-ring Kit *(For o-ring style bottom cover)* *Includes parts for four pushrods: top, middle, bottom o-rings.* | **93-4041** |
| Top O-ring *11293, 11157, 11101, 11190* | **50-8039** |
| Middle O-ring *11132A* | **50-8038** |
| Bottom O-ring *11145A* | **50-8037** |
| Quad Seal *11133A* | **50-8064-S** |
| O-ring Square *17955-36* | **106-3849** |



*All reference to HD® part numbers is for identification purposes only. We in no way are implying that any of S&S Cycle's products are original equipment parts or that they are equivalent to the corresponding HD® part number shown.*

| KEEPER LENGTHS FOR STOCK HARLEY-DAVIDSON® ENGINES | |
|---|---|
| 74" & 80" shovelhead | 3.330" |
| 74" panhead | 2.375" |
| 74" knucklehead | 3.312" |
| Ironhead Sportster® | 2.375" |
| Shovelheads—with S&S tappet guides | 2.900" (Subtract .430" from stock length) |

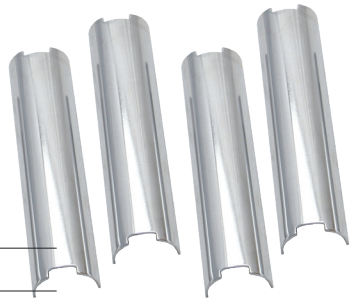

93-4105

## PUSHROD COVER KEEPER SETS

### FOR 1936–'99 BIG TWINS AND HARLEY-DAVIDSON® SPORTSTER® MODELS

| Length / Finish | | Description | Part # |
|---|---|---|---|
| 2.390" / Gloss Black | | | **930-0127** |
| 2.400" / Chrome | | | **93-4070**± *17950-48* |
| 2.500" | Chrome | 900/1000cc + ⅛" | **93-4100**± |
| | Gloss Black | | **930-0142** |
| 2.600" | Chrome | | **93-4101**± |
| | Gloss Black | | **930-0128** |
| 2.800" / Chrome | | | **93-4115**± *17950-86* |
| 2.900" | Chrome | | **93-4102**± |
| | Gloss Black | | **930-0126** |
| 3.000" / Chrome | | | **93-4103**± |
| 3.100" | Chrome | | **93-4104**± |
| | Gloss Black | | **930-0125** |
| 3.200" / Chrome | | | **93-4105**± |
| 3.330" / Chrome | | 74", KN74 , 80", 84", 86", 88", 93", KN93 | **93-4106**± *17949-40, 17950-66* |
| 3.500" / Chrome | | 96", 98" | **93-4107**± |
| 3.625" / Chrome | | 103" | **93-4108**± |
| 4.250" | | Custom. Extra long stainless steel 4.250". Customer to cut to required length. | **93-4109** |

*Notes: Keepers are sold in sets of four. All S&S pushrod keepers are chromed steel, except part #93-4109. Keeper part #93-4109 is intended for unusually tall engines. It is manufactured of unchromed stainless steel to prevent rust or peeling after it is trimmed to the required length.*

± ⚠ WARNING: Cancer and Reproductive Harm—www.P65Warnings.ca.gov

## REPLACEMENT PARTS FOR MANY OF THE COMPONENTS SUPPLIED IN S&S PUSHROD KITS ARE AVAILABLE SEPARATELY. IN SOME CASES THEY MAY BE USED AS DIRECT REPLACEMENTS FOR STOCK ITEMS.

### PUSHROD RELATED REPLACEMENT PARTS

| Description | Part # |
|---|---|
| Adjusting Unit Screw—1936–'52 Style<br>Fits stock 1936–'52 lifter with early stock 9/32"-32 threads. *18555-36* | **33-5332** |
| Adjusting Unit Sleeve | **33-5331** |
| Ball End for S&S Adjustable Pushrods<br>Fits S&S adjustable with 5/16"-32 threads. (Manufactured after 2-1-1996) | **93-5002** |
| Solid Lifter Adapter for S&S Adjustable Pushrod<br>Converts stock 1953–'84 hydraulic lifter to non-adjustable solid lifter. For use with S&S adjustable pushrods in shovelhead engines (same as unit supplied in kit #93-5067) | **33-5335** |
| Adjusting Unit Locknut<br>Fits S&S adjustable pushrods with early stock 9/32"-32 threads | **33-5333** |
| Fits S&S adjustable pushrods with 5/16"-32 threads. (Manufactured after 2-1-1996) | **93-5003-S** |

*All reference to HD® part numbers is for identification purposes only. We in no way are implying that any of S&S Cycle's products are original equipment parts or that they are equivalent to the corresponding HD® part number shown.*

# HIGH-PERFORMANCE VALVE SPRING KITS
## FOR 1948–'84 BIG TWIN ENGINES

### .550" LIFT DOUBLE VALVE SPRING KIT

For 1948–'84 big twins with up to .550" lift.

- Includes 4 inner springs, 4 outer springs, 4 aluminum top collars and late 1981–'85 bottom covers
- Use with stock-style bottom collar, valve guides, valves with stock ⅜" stem, and stock keepers
- Compatible with thin-stem valves if thicker keepers *(that maintain correct valve stem-top collar engagement)* are used
- Late single bottom collars are available for use in S&S cylinder heads for shovels and stock late 1981–'85 heads



**90-2053**

| S&S® .550" VALVE SPRINGS SPECIFICATIONS—1948–'84 BIG TWIN | | | |
|---|---|---|---|
| Lift | Installed Height | Seat Force | Force @ Max Lift |
| .550" | 1.500" | 150 lb. | 343 lb. |

| .550 LIFT VALVE SPRING KIT FOR 1948–'84 PANHEAD AND SHOVELHEAD ENGINES | |
|---|---|
| Description | Part # |
| For 1948–'84 Panhead and Shovelhead Engines | **90-2053** |
| Bottom Collar–Late 1981–'84 *18222-81 (each)* | **90-2038** |

***NOTE:*** Panhead engines usually require clearancing between rocker cover and top collar.

### .590" LIFT TRIPLE VALVE SPRING KIT

For 1981–'84 big twins and S&S SH and P Series heads with up to .590" lift.

- Includes 4 steel top collars, 4 bottom collars, 4 each outer, middle, and inner springs, shims, and 8 keepers
- Use with stock valve guides, stock valves with ⅜" stem, and stock keepers
- Compatible with thin-stem valves if thicker keepers (that maintain correct valve stem-top collar engagement) are used



| S&S® .590" VALVE SPRINGS SPECIFICATIONS—1981–'84 BIG TWIN | | | |
|---|---|---|---|
| Lift | Installed Height | Seat Force | Force @ Max Lift |
| .590" | 1.480" | 157 lb. | 356 lb. |

| .590 LIFT VALVE SPRING KIT FOR–1981–'84 BIG TWIN | |
|---|---|
| Description | Part # |
| For Late 1981–'84 and All S&S Cylinder Heads | **90-2063** |

***NOTE:*** .590" spring kit is year-group specific because of different bottom collars supplied with early and late kits. S&S heads require late 1981–'84 style kit, part #90-2063. When ordering replacement valve springs for S&S cylinder heads for shovelhead engines, order the 1981–'84 style part #90-2063.

# VALVE SPRING KIT
## FOR 1936–'47 BIG TWINS

- Fits S&S KN-Series engines and stock 1936–'47 knucklehead engines
- Accommodates cams with valve lifts up to .480"
- Kit consists of inner and outer springs for four valves, spring collars, shims, and valve keepers.

| S&S® .480" VALVE SPRINGS SPECIFICATIONS—1936–'47 BIG TWIN | | | |
|---|---|---|---|
| Lift | Installed Height | Seat Force | Force @ Max Lift |
| .480" | 1.315" | 160 lb. | 310 lb. |



900-0535



106-3637

### .480" VALVE SPRINGS FOR 1936–'47 BIG TWINS

| Description | Part # |
|---|---|
| S&S Valve Spring Kit for 1936–'47 OHV bt | **106-6398** |

### CAST IRON VALVE GUIDES FOR 1936–'47 OHV

| Description | Part # |
|---|---|
| Standard | **106-3637** *18185-40, 18181-36* |
| +.002" | **106-3948** *18187-40, 18184-36* |
| +.004" | **106-3638** |
| +.008" | **106-3639** |

### REPLACEMENT PARTS FOR .480" VALVE SPRINGS

| Description | | Part # |
|---|---|---|
| Springs, valve, dual, .480" | *each* | **106-4362** |
| | *4 pack* | **900-0535** |
| Top collar, valve spring | | **106-3828** |
| Keepers, valve spring, top collar | *each* | **90-2037-S** |
| | *8 pack* | **50-7165** |
| Bottom collar, valve spring | | **106-3827** |
| Shim, valve spring .015" | | **106-4549** |
| Bottom collar spacer | | **106-5094** |

***NOTE:*** These springs will not fit over stock guides. Stock guides must be turned down or S&S® Vintage guides must be used.

# ROLLER ROCKER ARMS
## FOR 1966–'84 BIG TWIN ENGINES

### FITMENT
- 1966–'84 big twins
- P-Series engines
- SH-Series engines

### FEATURES AND BENEFITS
- 8620 steel heat treated forgings for maximum strength
- .750" rocker arm bushing for 50% more load bearing area than stock .500" bushings
- Roller tip reduces valve tip wear and side thrusting
- 1.5:1 rocker ratio
- Oil passage allows top end oiling through pushrods
- Compatible with stock or S&S billet rocker boxes



900-4320A

### ROCKER ARMS FOR SHOVELHEAD ENGINES

| Description | Part # |
|---|---|
| Set *(includes two each front and rear rocker arms)* | **900-4320A** |
| Front exhaust or rear intake *17375-66A* | **900-4320FA** |
| Rear exhaust or front intake *17360-66A* | **900-4320RA** |

### REBUILD KIT S&S® ROLLER ROCKER ARMS

| | |
|---|---|
| Rebuilds four rocker arms | **90-4321** |



*All reference to HD® part numbers is for identification purposes only. We in no way are implying that any of S&S Cycle's products are original equipment parts or that they are equivalent to the corresponding HD® part number shown.*

# ROCKER ARMS AND SHAFTS
## FOR 1936–'47 OHV BIG TWINS




### FITMENT
- 1936–'47 OHV big twins
- Compatible with S&S® or stock tins
- Rocker arms are not compatible with stock rocker shafts

### FEATURES AND BENEFITS
- High quality CNC machined
- 1:1 stock knuckle rocker arm ratio
- Improved oil control

### KIT CONTENTS
- Four rocker arms FE, FI, RI, and RE, Four rocker shafts, Washers and spacers

**ROCKER ARMS AND SHAFTS FOR 1936–'47 OHV BIG TWINS**

| Description | | Part # |
|---|---|---|
| Rocker Arms and Shaft Set *(includes hardware)* | *4 pack* | **106-2412** |
| Front Intake *(includes shaft and spacers)* | *each* | **106-2862** |
| Front Exhaust *(includes shaft and spacers)* | *each* | **106-2863** |
| Rear Intake *(includes shaft and spacers)* | *each* | **106-2864** |
| Rear Exhaust *(includes shaft and spacers)* | *each* | **106-2865** |
| Rocker Shaft Set *(includes spacers and hardware)* | *4 pack* | **106-2413** |
| Nut and Washer Kit, Rocker Shaft Left Side *7831* | *4 pack* | **106-3632** |
| Nut and O-Ring, Rocker Box, KN-Series *17447-36* | *each* | **106-4355** |

*All reference to HD® part numbers is for identification purposes only. We in no way are implying that any of S&S Cycle's products are original equipment parts or that they are equivalent to the corresponding HD® part number shown.*

# VALVE SPRING COVERS (TINS)
## FOR KN-SERIES ENGINES

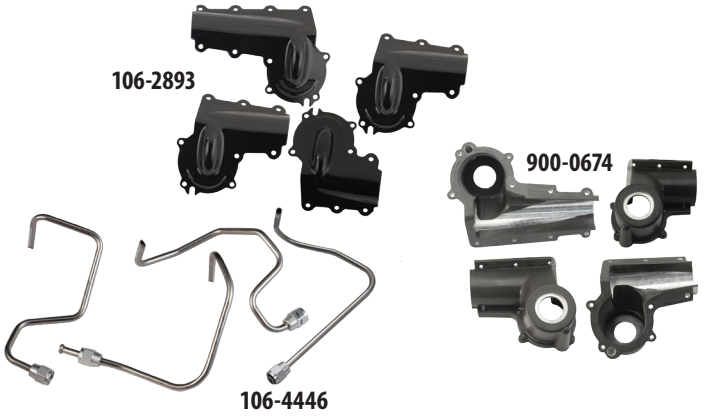


### FITMENT
- KN-Series engines

### FEATURES AND BENEFITS
- Improved design for better oil scavenging and less leaking
- Die-cast lower covers can be removed without pressing out valve guides
- Improved oil return lines are easy to replace and service
- Relatively stock appearance

### OPTIONS
- Chrome, silver powder coat and gloss black powder coat finishes

### KIT CONTENTS
- Lower cover kit contains set of four lower covers and gaskets
- Top cover kits contain four top covers and gaskets
- Oil return lines must be purchased separately

**VINTAGE VALVE SPRING COVER KITS**

| Description | | Part# |
|---|---|---|
| Lower Cover Kit | Black anodized | **900-0674** |
| Top Cover Kit | Chrome | **106-2400±** |
| | Gloss black | **106-2893** |

±⚠WARNING: Cancer and Reproductive Harm–www.P65Warnings.ca.gov

**OIL LINE RETURN 1936–'47 OHV BT (TINS ONLY)**

*CNC bent stainless steel for a perfect fit and long life*

| Description | Part # |
|---|---|
| Kit of 4 | **106-4446** |
| Front Intake | **106-4447** |
| Front Exhaust | **106-4448** |
| Rear Intake | **106-4449** |
| Rear Exhaust | **106-4450** |
| Seal, Oil Return Line, 28" OD x .18" ID x 1", Rubber Hose | **106-4456** |
| Rocker arm cover gasket kit | **900-0493** |

***NOTE: IMPORTANT:*** Requires the use of valve springs 106-6398 and Valve guides 106-3637 or corresponding oversizes. Stock rocker arms and shafts will require modifications to be used.

# ROCKER ARM HOUSINGS
## FOR 1936–'47 OHV ENGINES

### FITMENT
- Faithful reproductions of the stock "knuckles" for 1936–'47 OHV big twins.

### FEATURES AND BENEFITS
- Excellent for stock replacement and restoration.
- Does not include hardware and fittings.



**900-0618**

**ROCKER ARM HOUSINGS FOR 1936–'47 OHV ENGINES**

| Description | | Part # |
|---|---|---|
| Polished | Set | **900-0617** |
| | Front | **900-0618** |
| | Rear | **900-0619** |
| Natural | Set | **900-0622** |
| | Front | **900-0623** |
| | Rear | **900-0624** |



**OIL FEED LINE**

| Description | Part # |
|---|---|
| 74" & 93" | **106-4670** |

# POLISHED BILLET ROCKER COVERS
## FOR 1966–'84 BIG TWIN ENGINES

### FITMENT
- 1966–'84 shovelhead engines with stock or S&S cylinder heads
- SH-Series engines

### FEATURES AND BENEFITS
- CNC machined from 6061-T6511 aluminum billet and polished to a show finish
- Two piece design for easy installation
- Some frames allow installation with engine in the frame
- Works with stock or S&S roller rocker arms
- Clearanced for valve lifts of up to .590" with S&S roller rocker arms
- Fastened to the heads with 5/16" bolts
- Simple and inexpensive straight rocker shafts

### KIT CONTENTS
- Front and rear rocker box assemblies
- Rocker shafts
- Gaskets, seals and mounting hardware
- Installation instructions

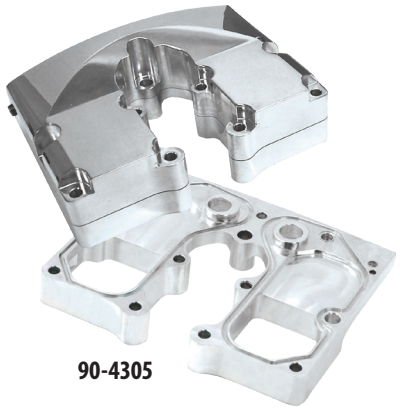

**90-4305**

**POLISHED BILLET ROCKER COVERS FOR 1966–'84 BIG TWIN ENGINES**

| Description | Part # |
|---|---|
| Billet Rocker Cover Set for Shovelhead Engines | **90-4305** |
| Replacement Rocker Arm Shaft Set | **90-4351** |

→ REPLACEMENT PARTS: SEE PAGE 192

# CHROME PAN COVERS
## FOR 1948–'65 BIG TWINS

**CHROME PAN COVER**

| Description | | Part # |
|---|---|---|
| Set *17500-48A* | | **106-0919**± |
| **Replacement Parts** | | |
| D-ring Set *17507-51* | | **106-0920** |
| Screw, SHCS 10-24 x ¾" *2674, 2675* | | **106-0913** |
| Rocker arm cover gasket 1948–'65 bt *117541-48* | *each* | **900-0329** |
| | *2 pack* | **900-0339** |

±⚠ WARNING: Cancer and Reproductive Harm–www.P65Warnings.ca.gov



**106-0919**±

*All reference to HD® part numbers is for identification purposes only. We in no way are implying that any of S&S Cycle's products are original equipment parts or that they are equivalent to the corresponding HD® part number shown.*

# INTAKE MANIFOLD O-RINGS AND CLAMPS

## FITMENT

- Panhead, shovelhead, and Harley-Davidson® Ironhead Sportster® models

## FEATURES AND BENEFITS

- Replace your flimsy and troublesome stock clamps
- ¾" wide and constructed of .020" thick stainless steel and use a curved 10-24 threaded "T"-bolt with plated steel aircraft hex locknut
- Sold individually—Two are required for each engine
- S&S intake manifold o-rings and rubberbands are made of special materials that resist destruction from the additives in today's fuel



16-0230



16-0231

### 1955–'78 BIG TWIN, 1957–'78 IRONHEAD SPORTSTER® MODELS, AND S&S KN, P, & SH SERIES ENGINES WITH O-RING STYLE CYLINDER HEADS

| Description | Part # |
|---|---|
| O-ring *27060-55* | **50-8046** |
| *10 Pack 27060-55* | **50-8132** |
| Clamp for O-ring Style *27063-57* | **16-0230** |

### 1979–'84 BIG TWIN, 1979–'85 IRONHEAD SPORTSTER® MODELS WITH RUBBERBAND STYLE CYLINDER HEADS

| Description | Part # |
|---|---|
| Rubberband *27062-78* | **16-0238** |
| *10 pack 27062-78* | **16-0245** |
| Clamp for Band Style *27063-80, 27063-78* | **16-0231** |

# ELECTRONIC TIMERS

- Fits S&S and stock generator style cases and allows the use of S&S Super Stock™ or other late style electronic ignition systems. (Ignition sold separately).
- Requires reverse timing gears for use in generator style engines.
- The domed billet timer has a period correct look for 1964 and earlier engines.



55-1269

### ELECTRONIC TIMERS

| Description | Part # |
|---|---|
| Billet generator style electronic timer | **55-1269** |
| Domed | **106-4622**± |

± ⚠ WARNING: Cancer and Reproductive Harm—www.P65Warnings.ca.gov



106-4622 ±

*All reference to HD® part numbers is for identification purposes only. We in no way are implying that any of S&S Cycle's products are original equipment parts or that they are equivalent to the corresponding HD® part number shown.*

# MANIFOLDS
## FOR STOCK ENGINES, P-SERIES, SH-SERIES & KN-SERIES ENGINES

- Manifolds for 1955–'65 panhead engines with "o-ring" style cylinder heads are available in 1⅞" bore only.
- 1936–'54 knuckle and pan cylinder heads with "plumber" style intake mounting nipples must be converted to accept a 1955 to 1965 o-ring manifold.




**16-1103**

### O-RING STYLE MANIFOLD FOR 1955–'65 BIG TWIN

| Cylinder Length | Manifold Length (Between Ports) | S&S ES, LS, A, Super B, E–Tillotson®, Bendix®, Keihin® |
|---|---|---|
| Stock—5.330" | 2.975" | **16-1100** |
| 5.392"–+ 1/16" | 3.025" | **16-1101** |
| 5.455"–+ 1/8" | 3.075" | **16-1102** |
| 5.517"–+ 3/16" | 3.125" | **16-1103** |



**16-1200**

### O-RING STYLE MANIFOLDS FOR 1966–'77 BIG TWINS

| Stock or S&S Engine Displacement | Cylinder Length | Size | S&S ES, LS, Super A, B, E, Tillotson®, Bendix®, Keihin® | Super G |
|---|---|---|---|---|
| 74", 80", 84", 88" | Stock 5.330" | 220 | **16-1200** *27021-71A* | **16-2200** |
| 93" HC | 5.363" | 222 | **16-1201** | **16-2201** |
| 93" | 5.405" | 225 | **16-1223** | **16-2223** |
| 96" | 5.440" | 228 | **16-1202** | – |
| 98" | 5.530" | 235 | **16-1204** | **16-2204** |
| 103" | 5.630" | 242 | **16-1206** | **16-2206** |



**16-2200**

### O-RING STYLE VOES MANIFOLD FOR KN-SERIES ENGINES

| Engine Type | Cylinder Length | S&S ES, LS, A, Super B, E–Tillotson®, Bendix®, Keihin® |
|---|---|---|
| KN93 | 5.625" | **106-4530** |
| KN74 | 5.530" | **160-0008** |

*Equipped with a VOES fitting for use with the S&S Super Stock Ignition system. Heads must be set up with o-ring adaptor inserts part #106-4654 (2 required).*




**106-4530**

### O-RING STYLE MANIFOLDS WITH VOES FOR SH-SERIES AND P-SERIES ENGINES

| Stock or S&S Engine Displacement | Cylinder Length | Size | S&S ES, LS, Super A, B, E, Tillotson®, Bendix®, Keihin® | Super G |
|---|---|---|---|---|
| SH80 | Stock–5.330" | 220 | **16-1230** | – |
| SH93H, P93H | 5.363" | 222 | **16-1231** | – |
| SH93, P93 | 5.405" | 225 | **16-1233** | – |
| SH103, P103 | 5.630" | 242 | – | **16-2236** |



**16-1230**

### O-RING STYLE MANIFOLDS FOR 1957–'78 HARLEY-DAVIDSON® IRONHEAD SPORTSTER® MODELS

| Engine Displacement | Cylinder Length | Size | S&S ES, LS, Super A, B, E, Tillotson®,Bendix®, Keihin® | Super G |
|---|---|---|---|---|
| 900cc, 1000cc | Stock 5.330" | 220 | **16-1200** *27021-71A* | **16-2200** |

# MANIFOLDS CON'T

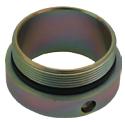

106-4654

## ADAPTOR

| Description | Part # |
|---|---|
| Converts stock "plumber" style heads to o-ring *(sold each, two required)* | **106-4654** |

## RUBBERBAND STYLE MANIFOLDS FOR 1978–'84 BIG TWINS



16-1300

| Stock or S&S Engine Displacement | Cylinder Length | Size | S&S ES, LS, Super A,B, E, Tillotson®, Bendix®, Keihin® | Super G |
|---|---|---|---|---|
| 74", 80", 84", 88" | Stock 5.330" | 220 | **16-1300** *27021-78* | **16-2300** |
| 93" HC | 5.363" | 222 | **16-1301** | **16-2301** |
| 93" | 5.405" | 225 | **16-1323** | **16-2323** |
| 96" | 5.440" | 228 | **16-1302** | **16-2302** |
| 98" | 5.530" | 235 | **16-1304** | **16-2304** |
| 103" | 5.630" | 242 | **16-1306** | **16-2306** |

## RUBBER BAND STYLE MANIFOLDS WITH VOES FITTING FOR 1983–'85 HD® IRONHEAD SPORTSTER® MODELS



16-1400

| Engine Displacement | Cylinder Length | Size | S&S ES, LS, Super A,B, E, Tillotson®, Bendix®, Keihin® |
|---|---|---|---|
| 900cc, 1000cc | Stock 5.330" | 220 | **16-1400** |

## RUBBER BAND STYLE MANIFOLDS WITHOUT VOES FITTING FOR 1979–'82 HD® IRONHEAD SPORTSTER® MODELS



16-2300

| Engine Displacement | Cylinder Length | Size | S&S ES, LS, Super A,B, E, Tillotson®, Bendix®, Keihin® | Super G |
|---|---|---|---|---|
| 900cc, 1000cc | Stock 5.330" | 220 | **16-1300** *27021-78* | **16-2300** |

*All reference to HD® part numbers is for identification purposes only. We in no way are implying that any of S&S Cycle's products are original equipment parts or that they are equivalent to the corresponding HD® part number shown.*

# NOSTALGIC AIR CLEANER COVERS

## FITMENT
- Super E carbs
- Teardrop air cleaner kits for stock carbs




**NOSTALGIC AIR CLEANER COVER**

| Description | Part # |
|---|---|
| Polished, Super E & G | **17-0071** |

***NOTE:*** Super B and Super E & G air cleaner covers are not interchangeable. They each have a unique bolt pattern.

# AIR HORN COVER

## FITMENT
- S&S short air horns

## FEATURES AND BENEFITS
- Sand casted just like the originals
- Really hard to tell them apart from the real deal




**AIR HORN COVER**

| Description | Part # |
|---|---|
| For S&S short air horns | **17-0026** |

# AIR HORNS & AIR HORN CONVERSION KITS

## SHORT AIR HORNS (2½")
- Fits S&S 1¾", 1⅞" L Series carbs and S&S 1⅞" Super A & B carbs
- Any stock carburetor with an identical air cleaner/air horn mounting pattern. These include Tillotson®, Bendix® or butterfly type Keihin®
- Available for S&S Super E & G carburetors

## LONG AIR HORNS (4")
- Available for S&S Super E, G, & D carbs

## KIT CONTENTS
### Air Horn Kit:
- Air Horn
- Three mounting screws

### Air Horn Conversion Kit:
- Air horn
- Three mounting screws
- Carb support bracket (bracket connects the center crankcase bolt to the bottom manifold carburetor mounting bolt)
- Two longer bottom carb to manifold mounting bolts
- Super E & G air horn conversion kit includes an enrichment device

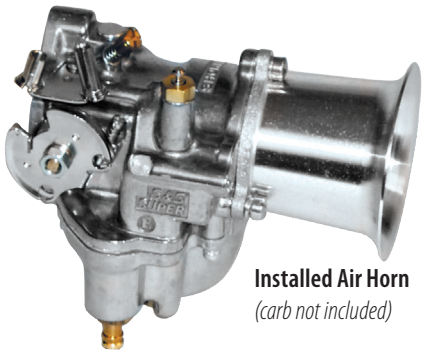


**Installed Air Horn**
*(carb not included)*

**AIR HORN SELECTION CHART**

| Description | Length | Super A & B | Super E & G | Super D |
|---|---|---|---|---|
| Air Horn Conversion Kits | 2½" | **17-0043** | **17-0484**± | – |
| | 4" | – | **17-0485**± | – |
| Air Horn Only | 2½" | **17-0042** | **17-0331** | – |
| | 4" | – | **17-0333** | **17-0141** |

± WARNING: Cancer and Reproductive Harm–www.P65Warnings.ca.gov

***NOTES:*** S&S recommends that air horns be used in racing applications only, as they do not provide the filtration required to protect the engine on a day-to-day basis.

Any installation of an air horn on an S&S carb in place of an air cleaner requires an S&S carb support bracket, part #16-0471, to securely fasten the carb to the engine. This bracket is included in the air horn conversion kits.

S&S recommends that the bowl vent plug at the bottom of carb body be removed when air horn is installed, as air horn may obstruct bowl vent in air cleaner mounting surface of the carb body.

# SUPER E & G SHORTY CARBURETOR KITS

## FITMENT
- 1936–'84 big twins
- 1957–'85 Harley-Davidson® Ironhead Sportster® *(except models with vertical magneto)*

## FEATURES AND BENEFITS
- Four fuel delivery ports—*Better throttle response*
- O-ring sealed idle mixture screw
- Increased air flow for more power
- Super E 1⅞" (47.6mm) bore—*for engines up to 100" displacement*
- Super G 2⅛" (52.4mm) bore—*for engines 100" or greater displacement*
- Adjustable enrichment starting system—*does not restrict air flow like a conventional choke*
- Adjustable accelerator pump
- S&S chrome Classic Teardrop air cleaner
- Two cable throttles required—*see notes*

## OPTIONS
- Complete kits for engines requiring stock length manifolds
- Partial kits for engine requiring non-stock length manifolds *(order manifold separately)*
- Carb only kits for replacement and custom applications




## KIT CONTENTS
- Super E or G carburetor assembly
- Manifold for stock height engine
- Manifold seals and clamps
- S&S chrome Classic Teardrop air cleaner kit
- All gaskets, hoses, and required hardware for installation
- Complete installation and tuning instructions

→ REPLACEMENT PARTS: SEE PAGE 194

### SUPER E AND G CARBURETOR KITS±

| Models | Super E Complete Kit *Manifold Included* | Super E Partial Kit *Manifold & Mounting Hardware Not Included* | | Super G Complete Kit *Manifold Included* |
|---|---|---|---|---|
| | Standard Tanks | Standard Tanks | 5 Gallon Tanks§ | Standard Tanks |
| **Big Twin Models** | | | | |
| 1979–'84 | **11-0411** | **11-0412** | **11-0418** | **11-0431** |
| 1966–'78 | **11-0402** | **11-0412** | **11-0418** | **11-0422** |
| 1955–'65* | **11-0401** | **11-0412** | – | – |
| **Harley-Davidson® Ironhead Sportster® Models** | | | | |
| 1979–'85‡ | **11-0406** | – | – | – |
| 1957–'78‡ | **11-0404** | – | – | – |
| **Carb Only** | | | | |
| All Years | **11-0420** | – | – | **11-0421** |

**Outside oil lines that feed heads on knucklehead and 1963–'65 panhead engines must be refabricated or use a 1" spacer block for additional clearance.*

*‡Does not fit engines equipped with vertical magneto.*

*§Shovelhead engines equipped with .075" longer than stock cylinders in chassis with five gallon gas tanks require additional air cleaner cover to gas tank clearance. Kits in this column include an air cleaner cover clearanced to fit these engines.*

*NOTE: 1979–'80 engines may be equipped with either o-ring or band style heads. Check before ordering.*

DISCLAIMER: NOT LEGAL FOR SALE OR USE IN CALIFORNIA ON ANY POLLUTION CONTROLLED MOTOR VEHICLE. NOT LEGAL FOR SALE OR USE NATIONWIDE ON ANY FEDERAL POLLUTION CONTROLLED MOTOR VEHICLE UNDER THE CLEAN AIR ACT.

± ⚠ WARNING: Cancer and Reproductive Harm–www.P65Warnings.ca.gov

***NOTES:*** Stock motorcycles 1980 or earlier must be updated to a two cable pull open/pull closed throttle control system. A single cable pull open system cannot pull the throttle closed in case the throttle should accidentally stick in the open position. S&S offers high quality throttle cable kits in several lengths for this purpose. A press-on sleeve is also available to increase the diameter of the throttle grip area of 1972 and earlier handle bars to 1", allowing installation of modern throttle assemblies. See ***page 169*** for throttle cables and press-on sleeves.

S&S "Shorty" carburetors will not fit Harley-Davidson® Ironhead Sportster® models with vertical magnetos due to clearance problems between the magneto and the carburetor. Shovelhead engines with five gallon gas tanks and cylinders that are taller than stock require a special notched air cleaner cover to clear the gas tank. Since these taller engines also require a special length manifold, select a carb with a notched air cleaner cover without a manifold from the chart and refer to the manifolds starting on ***page 162*** to select the correct length manifold.

S&S does not recommend polishing or chrome plating Super E & G carburetors. Our repair department has seen many carbs with passages plugged with polishing compounds and some carbs that had been destroyed because the polishing or chrome plating had altered critical machined surfaces.

Recommended for closed circuit use only—S&S Super E & G carbs shown are not approved for use on motor vehicles operated on California public highways, or in other states where similar pollution laws may apply. The user shall determine the suitability of the product for his or her use and shall assume all risk and liability in connection therewith.

# BLACK SUPER E & G CARBURETORS

## FEATURES AND BENEFITS

- Exclusive black coating—heat and chemical resistant
- Increased venturi diameter!—specially machined for 7% more flow—See flow chart

### BLACK CARBURETORS

| Description | | Part # |
|---|---|---|
| Increased venturi diameter *(7% more flow)* | Super E Carb | **110-0099** |
| | Super G Carb | **110-0100** |
| Standard venturi diameter | Super E Carb | **110-0133** |
| | Super G Carb | **110-0138** |

DISCLAIMER: NOT LEGAL FOR SALE OR USE IN CALIFORNIA ON ANY POLLUTION CONTROLLED MOTOR VEHICLE. NOT LEGAL FOR SALE OR USE NATIONWIDE ON ANY FEDERAL POLLUTION CONTROLLED MOTOR VEHICLE UNDER THE CLEAN AIR ACT



**110-0099**

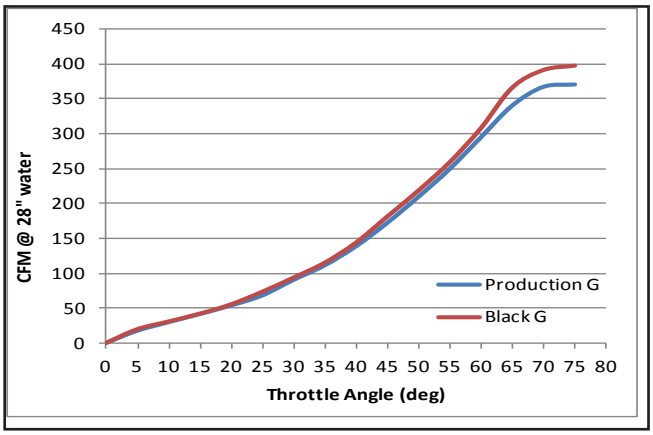


*Flow at WOT (wide open throttle) for the Black G carb increases 7% vs. the base S&S G carb*

***NOTE:*** These black carb kits do not include air cleaners. Air cleaner options areavailable starting on ***page 112***.

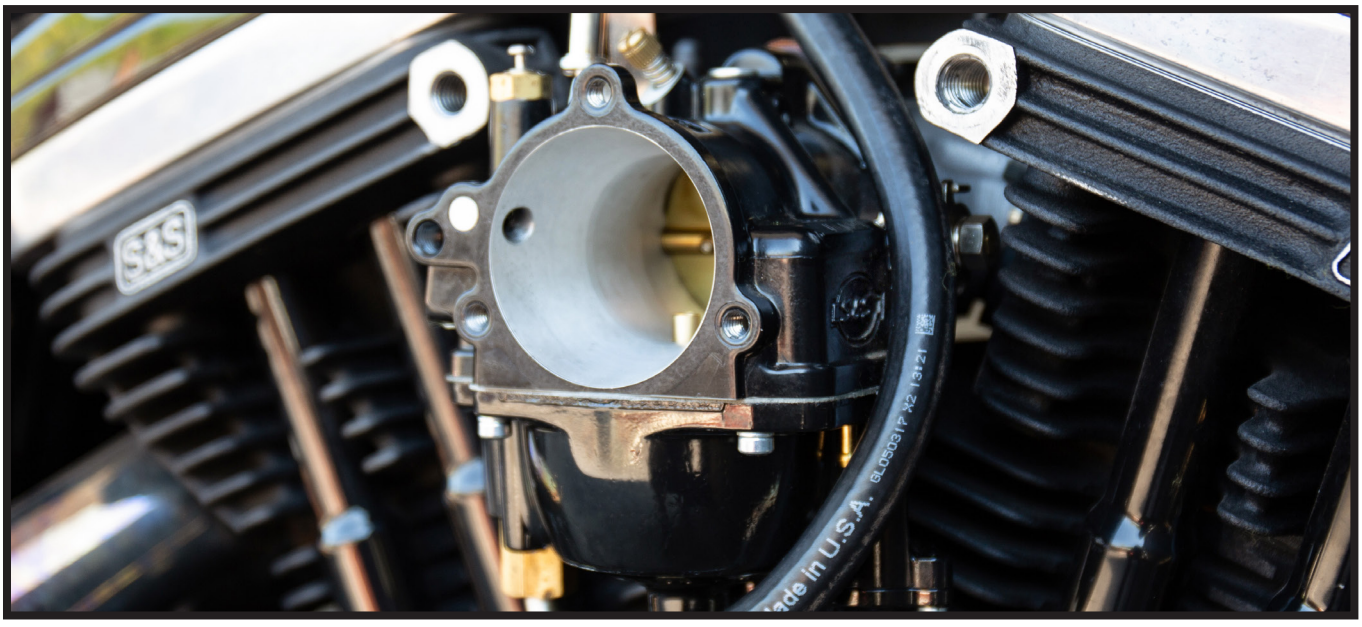

# JETS & CARB REBUILD KITS
## FOR S&S SUPER E & G CARBURETORS

For those who need to rejet their carburetor because of engine modifications, exhaust modifications, or changes in altitude, we have extra jet kits available which are designed to cover most jetting situations.

### DEALER JET KITS±

| Description | Part # |
|---|---|
| S&S Carb Parts Kit *(Contains needed parts to maintain S&S Super E and G carburetors)* | **11-3103** |
| S&S Jet Kit *(Includes 3 each of all intermediate jets and 5 each of all main jets, plus a main jet tool)* | **11-3102** |

±⚠WARNING: Cancer and Reproductive Harm–www.P65Warnings.ca.gov




**11-3103±**




**11-3102±**

### JET PACKS±

| Description | Part # |
|---|---|
| Low Range Jet Pack—For jetting most stock and moderate performance engines | |
| Includes one each intermediate jets *(.025", .0265", .028", .0295")* and one each main jets *(.062", .064", .066", .068", .070", .072", .074")* | **11-7270** |
| High Range Jet Pack—For jetting some stock and all performance engines | |
| Includes one each intermediate jets *(.0295", .031", .032", .033")* and one each main jets *(.072", .074", .076", .078", .080", .082", .084")* | **11-7271** |
| Master Jet Pack—For jetting all Super B, E, and G equipped engines | |
| Includes one each intermediate jets *(.025", .0265", .028", .0295", .031", .032", .033")* and one each main jets *(.062", .064", .066", .068", .070", .072", .074", .076", .078", .080", .082", .084")* | **11-7272** |

±⚠WARNING: Cancer and Reproductive Harm–www.P65Warnings.ca.gov



**11-7272±**

### INTERMEDIATE JETS—SERIES #94 INDIVIDUAL SELECTION±

| Size | QTY | Part # | Size | QTY | Part # |
|---|---|---|---|---|---|
| .025 | *each* | **11-0250** | .032 | *each* | **11-0320** |
| | *3 pack* | **11-7107** | | *3 pack* | **11-7112** |
| .0265 | *each* | **11-0265** | .033 | *each* | **11-0330** |
| | *3 pack* | **11-7108** | | *3 pack* | **11-7113** |
| .028 | *each* | **11-0280** | .036 | *each* | **11-0360** |
| | *3 pack* | **11-7109** | | *3 pack* | **11-7114** |
| .0295 | *each* | **11-0295** | .040 | *each* | **11-0400** |
| | *3 pack* | **11-7110** | | *3 pack* | **11-7115** |
| .031 | *each* | **11-0310** | Blank | *each* | **11-0000** |
| | *3 pack* | **11-7111** | | | |

±⚠WARNING: Cancer and Reproductive Harm–www.P65Warnings.ca.gov

***NOTE:*** No returns or exchanges on jets.

Early Series #94 gas jets were stamped with single digit numbers. Conversions for these numbers are:

1..... .025"
2..... .028"
3..... .031"
4..... .033"
5..... .036"
6..... .040"



**106-3517±**

## MAIN JETS—SERIES #72 INDIVIDUAL SIZE SELECTION±

| Size | QTY | Part # | Size | QTY | Part # |
|---|---|---|---|---|---|
| .040 | each | 11-4040 | .080 | each | 11-4080 |
| | 5 pack | 11-7220 | | 5 pack | 11-7240 |
| .042 | each | 11-4042 | .082 | each | 11-4082 |
| | 5 pack | 11-7221 | | 5 pack | 11-7241 |
| .044 | each | 11-4044 | .084 | each | 11-4084 |
| | 5 pack | 11-7222 | | 5 pack | 11-7242 |
| .046 | each | 11-4046 | .086 | each | 11-4086 |
| | 5 pack | 11-7223 | | 5 pack | 11-7243 |
| .048 | each | 11-4048 | .088 | each | 11-4088 |
| | 5 pack | 11-7224 | | 5 pack | 11-7244 |
| .050 | each | 11-4050 | .090 | each | 11-4090 |
| | 5 pack | 11-7225 | | 5 pack | 11-7245 |
| .052 | each | 11-4052 | .092 | each | 11-4092 |
| | 5 pack | 11-7226 | | 5 pack | 11-7246 |
| .054 | each | 11-4054 | .094 | each | 11-4094 |
| | 5 pack | 11-7227 | | 5 pack | 11-7247 |
| .056 | each | 11-4056 | .096 | each | 11-4096 |
| | 5 pack | 11-7228 | | 5 pack | 11-7248 |
| .058 | each | 11-4058 | .098 | each | 11-4098 |
| | 5 pack | 11-7229 | | 5 pack | 11-7249 |
| .060 | each | 11-4060 | .100 | each | 11-4100 |
| | 5 pack | 11-7230 | | 5 pack | 11-7250 |
| .062 | each | 11-4062 | .102 | each | 11-4102 |
| | 5 pack | 11-7231 | | 5 pack | 11-7251 |
| .064 | each | 11-4064 | .104 | each | 11-4104 |
| | 5 pack | 11-7232 | | 5 pack | 11-7252 |
| .066 | each | 11-4066 | .106 | each | 11-4106 |
| | 5 pack | 11-7233 | | | |
| .068 | each | 11-4068 | .110 | each | 11-4110 |
| .070 | each | 11-4070 | | | |
| | 5 pack | 11-7235 | | 5 pack | 11-7255 |
| .072 | each | 11-4072 | .115 | each | 11-4115 |
| | 5 pack | 11-7236 | | 5 pack | 11-7256 |
| .074 | each | 11-4074 | .120 | each | 11-4120 |
| | 5 pack | 11-7237 | | 5 pack | 11-7257 |
| .076 | each | 11-4076 | | | |
| | 5 pack | 11-7238 | | | |
| .078 | each | 11-4078 | | | |
| | 5 pack | 11-7239 | | | |

± ⚠ WARNING: Cancer and Reproductive Harm–www.P65Warnings.ca.gov

## MAIN JET AIR BLEED KIT (ONE JET EACH SIZE)±

| Sizes | Part # |
|---|---|
| .042" - .060" | 106-3517 |
| .084" - .120" | 106-3518 |

± ⚠ WARNING: Cancer and Reproductive Harm–www.P65Warnings.ca.gov

## S&S® CARBURETOR REBUILD KITS

To insure that you continue to get the utmost in performance from your S&S carburetor, we have put together a series of rebuild kits that are designed to provide the proper parts to return a worn carburetor to top shape. We have assembled different types of kits to cover the different degrees of rebuild necessary.

## MASTER REBUILD KITS

Master rebuild kits contain a body rebuild kit, accelerator pump rebuild kit (Super E and G only), all new fasteners, springs, idle mixture screw, seat, and needle assembly. Everything needed to completely rebuild one carburetor.

### MASTER REBUILD KIT±

| Description | Part # |
|---|---|
| Super E | 11-2923 |
| Super G | 11-2924 |

± ⚠ WARNING: Cancer and Reproductive Harm–www.P65Warnings.ca.gov

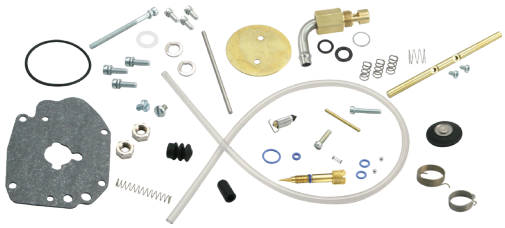

11-2923

## BODY REBUILD KITS

Body rebuild kits for Super E and G carbs also contain throttle shaft nuts, nylon washers, accelerator pump o-ring, and accelerator pump boot. Body rebuild kits for Super E and G carbs do not contain throttle shaft bushings since these carbs have stainless steel throttle shaft bushings already installed.

### BODY REBUILD KIT±

| Description | Part # |
|---|---|
| Super E | 11-2906 |
| Super G | 11-2907 |



11-2907

± ⚠ WARNING: Cancer and Reproductive Harm–www.P65Warnings.ca.gov

## BASIC REBUILD KIT

A gasket and seal kit for low mileage Super E & G carbs. Perfect to reassemble carbs taken apart for inspection and cleaning.

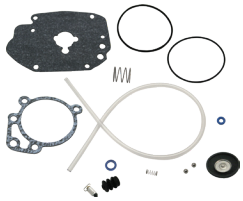

### BASIC REBUILD KIT±

| Description | Part # |
|---|---|
| Super E & G | 110-0067 |

± ⚠ WARNING: Cancer and Reproductive Harm–www.P65Warnings.ca.gov

## ACCELERATOR PUMP REBUILD KITS

Accelerator pump rebuild kits contain diaphragm, diaphragm spring, check balls, check ball spring, pump pushrod, and required hardware and o-rings.

### ACCELERATOR PUMP REBUILD KIT

| Description | Part # |
|---|---|
| Super E & G | 11-2918 |

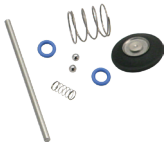

# THROTTLE CABLE ASSEMBLIES

## EARLY STOCK STYLE TWO-CABLE THROTTLE ASSEMBLIES

- Designed to update 1981 and earlier chassis with 1" diameter handlebars for S&S Super E and G carbs or any other butterfly type carburetors with 1981–up stock style throttle linkage
- Cables are not interchangeable since they are specifically designed for the opening or closing side of throttle
- Kit contains throttle grips and both. Select kit with cable length desired. Cable measurement is from throttle grip to end of cable housing, barrel fittings are molded in place.



19-0448

### EARLY STOCK STYLE TWO-CABLE THROTTLE

| Description | Part # |
|---|---|
| Throttle Assembly with 36" Cables | **19-0450** |
| Throttle Assembly with 39" Cables | **19-0448** |
| Throttle Assembly with 42" Cables | **19-0482** |
| Throttle Assembly with 48" Cables | **19-0449** |

### S&S® THROTTLE CABLE APPLICATION CHART

| Application | Length Total Housing | Length Vinyl Housing | Open Side | Close Side |
|---|---|---|---|---|
| FX & FL models 1985 and earlier* big twins 1995 and earlier* | 36" | 32" | **19-0432** | **19-0433** |
| To 1995 Harley-Davidson® Softail® (FXSTC, FXST, FLSTC, FLSTF) 1986–'94 FXR, 1993–'95 Dyna® | 39" | 35" | **19-0434** | **19-0435** |
| To 1995 All FLT models | 48" | 44" | **19-0462** | **19-0463** |
| To 1995 custom application | 42" | 38" | **19-0446** | **19-0447** |

**1980 and earlier must be converted to dual cable throttle assembly*

## UNIVERSAL THROTTLE ASSEMBLY

- Used with early style S&S carburetors including Early Style, L Series, Super B, Super D, and Two-Throat
- Can also be used with any other carburetor which uses a screw clamp style throttle arm
- Threads on both cables are the same size so cables are interchangeable. One end of each cable has a molded ball end, and the other end is plain. Cable can be cut to length required. Fits 1" diameter handlebars.



19-0229

### UNIVERSAL THROTTLE ASSEMBLY

| Description | Part # |
|---|---|
| Universal 48" Throttle Assembly | **19-0229** |
| Universal Replacement Throttle Cable | **19-0224** |

### REPLACEMENT PARTS

| Description | Part # |
|---|---|
| S&S Universal Throttle Cable | **106-3520** |
| Throttle Grip Clamp Set 1985–'95 | **106-3519** |
| Top Throttle Grip Clamp only | **19-0222** |
| Bottom Throttle Grip Clamp only | **19-0220** |
| Throttle Grip Clamp Screw<br>*(Fits S&S throttle assemblies: Part #19-0448, #19-0449, #19-0482, #19-0450, and #19-0229)* | **50-0043** |
| Throttle Grip Set | **106-3521** |
| Right Hand Grip only | **19-0225** |
| Left Hand Grip only | **19-0226** |
| Cable Adjuster<br>Fits S&S throttle assembly part #19-0229 | **19-0223** |
| Cable Adjuster Jam Nut<br>Fits S&S throttle assembly part #19-0229 | **19-0227** |
| Handlebar Spacing Sleeve 4" x 1" O.D.<br>– converts ⅞" handlebars to 1" O.D. | **19-0235** |

# HI-4N PERFORMANCE IGNITION

## FITMENT

- 1970–1984 big twins
- 1971–1985 Ironhead Sportster® Models

## FEATURES AND BENEFITS

- One piece machined aluminum housing reduces vibration and improves heat dissipation and reliability
- Improved kick start algorithm designed to start as easily as points
- BCD switches with solid detent and legible marking allow easy and repeatable adjustments of mode, advance rate, and rev limit
- Single-fire and dual-fire function built into a single module
- Flexible wiring harness makes installation easier
- Initial timing marks allow precise adjustment and reinstallation
- Sensor covers integrated into housing to provide protection during installation



550-0502

### HI-4N PERFORMANCE IGNITION

| Fitment | Part # |
|---|---|
| Ignition only | **550-0501** |
| Kit Includes S&S® HI-4N Ignition, Single-Fire Coil, and 8.5mm double silicone, premium quality spark plug wires | **550-0502** |

# SUPER STOCK™ IGNITIONS

## FITMENT

- S&S® SH-Series
- S&S KN-Series
- S&S P-Series

## FEATURES & BENEFITS

- Electric-start mode allows the pre-ignition cranking to be set anywhere from 1 to 4 engine revolutions *(only available with current modules—earlier modules cannot be updated)*
- Pre-programmed ignitions are custom tailored for a specific S&S engine—no need for adjustments
- Single fire operation—requires a single fire coil for single spark plug applications
- Dual plugged applications require a pair of two tower coils or a single four tower coil
- Minimum 3.0Ω primary resistance
- Overload and short circuit protected
- VOES switches to less aggressive curve under load or hard acceleration
- 6300 rpm rev-limiter
- 24-hour break-in rev-limiter—prevents damage during break-in
- Data logging diagnostic capabilities



55-1352

### SUPER STOCK® IGNITION MODULE AND KITS

| Engine | Kit Part # | Module Part # |
|---|---|---|
| SH80 | **55-1350** | **55-1340** |
| SH93/P93 | **55-1351** | **55-1341** |
| SH93H/P93H/P74 | **55-1352** | **55-1342** |
| SH103 | – | **55-1343** |
| KN93/KN74 | **106-3201** | **106-3200** |

### SUPER STOCK® IGNITION KIT REPLACEMENT PARTS

| Description | | Part # |
|---|---|---|
| Pick-up Cup and Mounting Screw | | **55-1247**± |
| Connector Kit USA[1] | | **55-1249** |
| VOES Switch with Hardware USA[1] | | **55-1248** |
| VOES Hose, 9" USA | *each* | **19-0395** |
| | *5 pack* | **19-0398** |
| VOES Manifold Fitting | | **16-0136-S** |
| VOES Hose Tee | | **50-8124-S** |
| **Optional Parts** | | |
| S&S Single Fire Coil (3.0Ω) | | **55-1571** |

± ⚠ WARNING: Cancer and Reproductive Harm–www.P65Warnings.ca.gov

***NOTES:*** S&S Super Stock ignition systems are available in complete ignition kits and as replacement modules. S&S single fire ignition coils are available separately.

Keep in mind that the curves are preset for a specific S&S engine, and that modules intended for one engine may not yield optimum results when used on another configuration.

Generator style engines require reverse timer gears and a special timer, designed to accept an electronic ignition. S&S offers two beautiful billet timers for this application.

# 5-SPEED TRANSMISSION CASE
## FOR 1965–'85 4-SPEED BIG TWINS



### FITMENT
- 1965–'85 big twin 4-speed chassis

### FEATURES AND BENEFITS
- Update 4-speed bikes to 5-speed transmission
- CNC machined from 356-T6 aluminum castings
- Accepts most OEM and aftermarket parts designed for 1985–'99 big twin 5-speed transmissions
- CNC-machined billet trap door with bearings and required hardware
- Special battery box/starter brackets
- Shift linkage required for 4-speed FX and FL models
- Footpeg adapter kit required for FX

### KIT CONTENTS
- Transmission case assembly
- Required hardware
- Instructions

**4 TO 5-SPEED TRANSMISSION CASE KIT**

| Description | Part # |
|---|---|
| Basic Case Assembly Kit | **56-1051** |

→ REPLACEMENT PARTS: SEE PAGE 204

***NOTES:*** The S&S 4 to 5-speed transmission case is not compatible with the factory Harley-Davidson® primary belt drive used on 1980–'83 FXSB Sturgis models.

For applications that utilize an existing 4-speed driveline, a 1980 to early '84, 5-speed style chain-drive mainshaft and 1980 to early '84 style main drive gear must be used. These parts are compatible with the tapered I.D. clutch hub used on 4-speed big twins.

4 and 5-speed transmissions utilize the same 1:1 final drive ratio. As a result, the 5-speed gear set will not alter engine RPM at highway speeds. The additional gear narrows the gap between lower gears for improved acceleration and better performance in traffic.

This transmission case will fit earlier big twin frames. However, the engine sprocket shaft must be of the type used in 1970-later big twin style engines. The transmission case itself is compatible with HD® secondary (rear) belt drive if the correct mainshaft, main drive gear, inner primary cover, starter shaft, starter housing, and related parts are used. However, the builder may encounter other obstacles when converting a motorcycle with chain final drive to belt final drive.

The purchaser's countershaft and shift fork shaft will require shortening.

A low contact-style countershaft gear must be used in this transmission case to match the 1980–'84 main drive gear required. Harley-Davidson® replaced low-contact gears with high-contact gears on 1994 international big twin models and 1995 U.S. models. Low and high contact gears may not be mixed.

S&S trap doors are of the 1987–'99 style. S&S recommends using this style trap door and end cover with the "ball and ramp" clutch actuator. The strength of the earlier, lever-type actuator is marginal for heavy clutch springs sometimes required in high-performance applications.

Most 4-speed big twin style engines utilize transmission-driven mechanical speedometers. This transmission case has no provision for speedometer drive, and must be used with a wheel-driven speedometer and speedometer drive. The existing wheel may require modification to accept the speedometer drive unit.

The clutch-actuator end of the 4-speed clutch cable is not compatible with the five-speed type clutch actuator. Options are to replace the existing clutch lever with an 1987–'99 style lever or purchase a custom cable with the correct ends from Barnett Tool and Engineering in Ventura, California. (Phone: 805-642-9435)

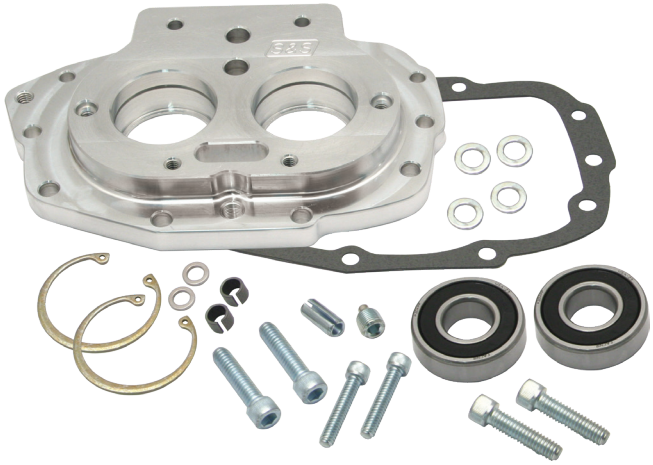

**BILLET TRAP DOOR ASSEMBLY**

| Description | Part # |
|---|---|
| Billet Trap Door Assembly | **56-1027** USA |

→ REPLACEMENT PARTS: SEE PAGE 204

# RETRO KICK STARTER COVER KIT

## FITMENT

- 1940–'86 big twin
  *(year group authenticity is listed in the product descriptions below)*

## FEATURES AND BENEFITS

- Authentic detailing in cover casting
- Updates and improvements eliminate cracking problems of original covers
- Utilizes your stock hardware and filler plug, gasket included
- Heavy duty kicker boss with single bushing



**106-6479-J7**



**106-6479-G6**



**106-6479-00**

### TRANSMISSION COVER KITS

| Description | Part # |
|---|---|
| **1948–'50 Big Twins**<br>J7 Date Code *33277-36, 33277-36A* | **106-6479-J7** |
| **1940–'47 Big Twins**<br>The G6 cover duplicates the external shape for 1940–'47. The G6 cover has a stamped in part number just as the original. The G6 date code stands for June of 1946.<br>G6 Date Code *33277-36, 33277-36A* | **106-6479-G6** |
| **1940–'86 Big Twins**<br>The 00 cover has no part number or date code. It was created with the custom application in mind where authenticity isn't a must, or polishing or other finishes are desired. *33277-36, 33277-36A* | **106-6479-00** |

### REPLACEMENT PARTS

| Description | | Part # |
|---|---|---|
| Bushing | Lower, Clutch Arm *33290-38* | **106-6473** |
| | Upper, Clutch Arm *33291-36* | **106-6474** |
| Kicker Shaft | | **106-6475** |
| Gasket *33295-36* | | **560-0012** |
| Oil Seal/Seal,1" OD x .75" Shaft x .125" | | **106-6476** |



*All reference to HD® part numbers is for identification purposes only. We in no way are implying that any of S&S Cycle's products are original equipment parts or that they are equivalent to the corresponding HD® part number shown.*

# GASKETS

### REBUILD GASKET KITS FOR S&S® ENGINES & HOT SET UP KIT®

| Description | Bore | Part # |
|---|---|---|
| SH-Series 1966–'84 | 3½" | **106-0407** |
| P-Series/SH-Series 1948–'84 | 3⅝" | **106-0408** |
| KN-Series 1936–'47 | 3⅝" | **106-2414** |

### TOP END GASKET KITS

| Description | Bore | Part # |
|---|---|---|
| P Series/SH-Series 1966–'84 | 3⅝" | **90-9501** |
| P Series/SH-Series 1966–'84 | 3½" | **90-9500** |

### CYLINDER HEAD GASKET KITS

| Description | Bore | Part # |
|---|---|---|
| P Series/SH-Series 1966–'84 | 3⅝" | **90-1918** |
| P Series/SH-Series 1966–'84 | 3½" | **90-1917** |

### HEAD GASKETS FOR S&S® P-SERIES AND SH-SERIES 1948–'84 (SHOVELHEAD BOLT PATTERN)

| Description | Thickness | Bore | | Part # |
|---|---|---|---|---|
| Copper | .032" | 3⅝" | *each* | **93-1042** |
| | | | *10 pack* | **93-1062** |
| Copper *16770-66B* | .032" | 3⁷⁄₁₆" & 3½" | *each* | **93-1041** |
| | | | *10 pack* | **93-1061** |

### HEAD GASKETS FOR S&S® SW FOR PAN/KNUCKLE (PANHEAD HEAD BOLT PATTERN)

| Description | Thickness | Bore | | Part # |
|---|---|---|---|---|
| Composite | .032" | 3⅝" | *each* | **93-1019** |

### HEAD GASKETS FOR KN-SERIES 1936–'47

| Description | Thickness | Bore | | Part # |
|---|---|---|---|---|
| Copper | .032" | 3⅝" | *each* | **106-2681** |
| | | | *2 pack* | **106-2432** |
| Copper | .032" | 3⁷⁄₁₆" | *2 pack* | **106-2689** |

### HEAD GASKETS FOR FH-SERIES AND UL 1938–'48

| Description | Thickness | Bore | | Part # |
|---|---|---|---|---|
| Copper *16769-36* | .020" | 3⁷⁄₁₆" | *2 pack* | **106-2669** |

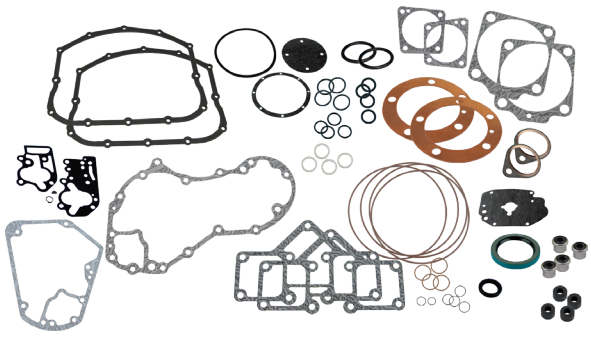

**106-0408**

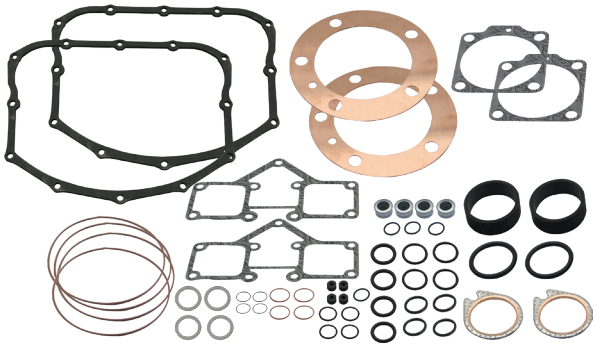

**90-9501**

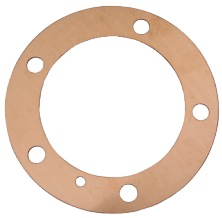

**93-1042**

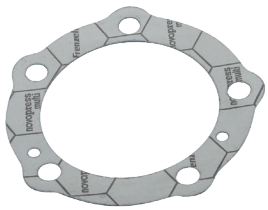

**93-1019**

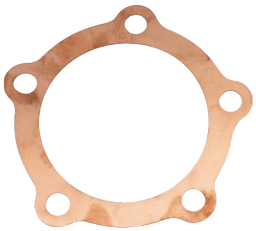

**106-2681**

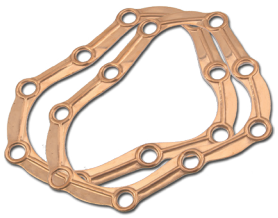

**106-2669**

***NOTES:*** While many of the gaskets in these kits will work for stock applications, some gaskets in the kits are specifically designed for S&S parts used in S&S engines.
Alternator style lower end kits include outer gaskets for both S&S flanged and flangeless gear covers. Not all gaskets will be used.
Oil pump gaskets provided in lower end gasket kits fit the standard pumps provided with S&S engines. If the crankcase of an engine was special ordered to accept a different type of oil pump, these gaskets may not fit.

*All reference to HD® part numbers is for identification purposes only. We in no way are implying that any of S&S Cycle's products are original equipment parts or that they are equivalent to the corresponding HD® part number shown.*

## BASE GASKETS FOR SH-SERIES 1966–'84

| Description | Thickness | Bore | Part # | |
|---|---|---|---|---|
| Micropore | .018" | 3⅝" | *each* | **93-1022-S** |
| | | | *10 pack* | **93-1069** |
| Micropore *16776-63* | .018" | 3½" | *each* | **93-1023-S** |
| | | | *10 pack* | **93-1070** |

## BASE GASKETS FOR P-SERIES 1948–'65

| Description | Thickness | Bore | Part # | |
|---|---|---|---|---|
| Micropore | .018" | 3⅝" | *each* | **93-1022-S** |
| | | | *10 pack* | **93-1069** |

## BASE GASKET FOR S&S PAN/KNUCKLE SW 1936–'65

| Description | Thickness | Bore | Part # | |
|---|---|---|---|---|
| Composite *16776-63* | .018" | 3⅝" | *each* | **93-1023-S** |
| | | | *10 pack* | **93-1070** |
| Composite | .018" | 3⅝" | *each* | **93-1022-S** |
| | | | *10 pack* | **93-1069** |

## BASE GASKETS FOR KN-SERIES 1936–'47

| Description | Thickness | Bore | Part # | |
|---|---|---|---|---|
| Composite | .020" | 3⅝" | *each* | **106-2690** |
| Composite *16774-21* | .020" | 3⁵⁄₁₆" & 3⁷⁄₁₆" | *each* | **106-2692** |

## EXHAUST GASKETS

| | | |
|---|---|---|
| S&S SH-Series, P-Series, and 1966–'84 bt | *each* | **93-1004-S** |

## VALVE GUIDE SEALS

| | | |
|---|---|---|
| Fits S&S Heads for 1966–'84 bt and 1981–'84 stock cylinder heads | *4 pack* | **900-1005** |

## ROCKER BOX GASKET KITS AND INDIVIDUAL GASKETS

| | | |
|---|---|---|
| Gasket Kit S&S Billet Rocker boxes 1966–84 bt | | **90-4311** |
| O-ring,(-160),5.250" ID x 5.437" OD,Viton® | *each* | **50-7961-S** |
| O-ring,(-019),.812" ID x .937" OD,Viton® | *each* | **50-7962-S** |
| O-ring,.551" ID x .627" OD,Viton® | *each* | **50-7963-S** |
| O-ring,.374" ID x .473" OD,Viton® | *each* | **50-7965-S** |
| Gasket,Rocker Cover,1966–'84 bt *17540-69, 17540-69A* | *each* | **90-4040** |
| | *10 pack* | **90-4064** |
| Stock Rocker Boxes1966–'84 bt *17540-69, 17540-69A* | *each* | **90-4040** |
| | *10 pack* | **90-4064** |
| Rocker Arm Cover Gasket 1948–'65 bt *117541-48* | *each* | **900-0329** |
| | *Set* | **900-0339** |
| Rocker Arm Cover Gasket Kit 1936-'47 bt | | **900-0493** |
| Gasket,Bottom,Valve Spring Covers,(Tins), Vulcanized Fiber,1936-'47 OHV bt | | **900-0668** |
| Gasket,Set,Valve Spring Covers,KN-Series,(Tins) | | **106-3166** |
| Seal,Oil,Rocker Arm,1936-'47 OHV bt,KN-Series *17475-38* | | **106-3636** |
| O-ring,Square,.1875" *17955-36* | | **106-3849** |
| O-ring,(-017),.676" ID x .816" OD,Black,Viton® | | **50-0466** |
| O-ring,(-015),.562" ID x .068" OD,Black,Viton® *26432-76A* | *each* | **50-8034-S** |
| | *2 pack* | **50-8034** |
| O-ring,(-326),1.625" ID x 2" OD,Black,Viton® *27060-55* | *each* | **50-8046** |
| | *10 pack* | **50-8132** |

## LOWER END GASKETS AND SEALS

| | | |
|---|---|---|
| 1970–'99 Big Twin Engine *25225-93A, 25225-93B, 25225-70C, 25257-80* | *each* | **31-2107** |
| | *10 pack* | **106-0232** |
| 1936–'69 Big Twin Engine w/S&S Cases *25225-36A* | | **31-2030** |
| 1936–'69 Big Twin Engine w/Stock Cases *25225-36C* | | **106-2072** |

## CAMSHAFT OIL SEALS FOR 1970–'99 BIG TWIN MODELS

| | | |
|---|---|---|
| Seal,Gearcover Cam,1" x 1.441" x .250" *83162-51* | *each* | **31-4022** |

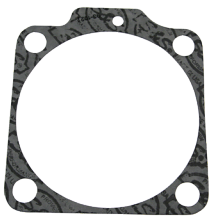

**93-1022-S**

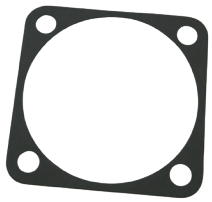

**106-2690**

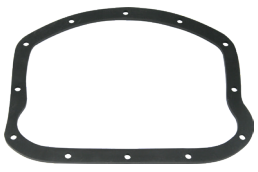

**900-0329**

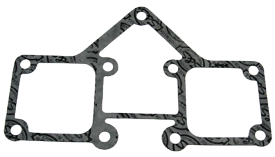

**90-4040**

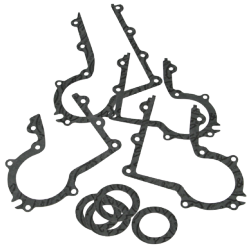

**106-3166**

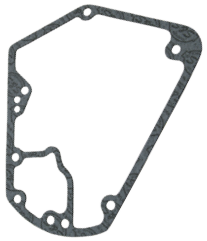

**31-2107**

*All reference to HD® part numbers is for identification purposes only. We in no way are implying that any of S&S Cycle's products are original equipment parts or that they are equivalent to the corresponding HD® part number shown.*

## TAPPET GUIDE GASKETS

| | | |
|---|---|---|
| 1948–'99 bt engines–Set *(Includes Front & Rear)* *18633-48* | each | **33-5302** |
| | 10 pack | **33-5313** |
| Front *18634-48C* | each | **33-5302F** |
| | 10 pack | **33-5313F** |
| Rear *18633-48B, 18633-48D* | each | **33-5302R** |
| | 10 pack | **33-5313R** |
| 1936–'47 OHV bt engines–Set *(Includes Front & Rear)* *18632-36* | | **106-2563** |

## PUSHROD O-RINGS

| | | |
|---|---|---|
| Pushrod O-Ring Kit 1979-'84 Big Twin | | **93-4041** |
| Top O-Ring *11293, 11157, 11101, 11190* | each | **50-8039** |
| Middle O-Ring *11132A* | each | **50-8038** |
| Bottom O-Ring *11145A* | each | **50-8037** |
| Quad Seal *11133A* | | **50-8064-S** |
| Washer, Bottom Pushrod Tube | each | **50-7050** |
| | 10 pack | **50-7072** |

## SPROCKET SHAFT SEAL

| | | |
|---|---|---|
| 1936–'99 Big Twin *12026B* | each | **31-4010** |
| | 5 pack | **31-4110** |

## OIL PUMP GASKET KITS STANDARD S&S BILLET OIL PUMP 1936–'91

| | |
|---|---|
| Gasket Rebuild Kit | **31-6271** |
| Master Rebuild Kit | **31-6275** |
| Oil Pump Drive Shaft Seal *26227-58* | **31-6005** |

## FUEL SYSTEM GASKETS

| | | |
|---|---|---|
| Manifold Seals | | |
| Rubberband–1979-'84 BT and 1979-'85 XL *27062-78* | each | **16-0238** |
| | 10 pack | **16-0245** |
| O-ring–1955-'78 BT and 1957-'78 XL *27060-55* | each | **50-8046** |
| | 10 pack | **50-8132** |
| Cap, rubber, manifold, fitting | | **50-8372** |

## CLASSIC TEARDROP AIR CLEANER GASKETS

| | | |
|---|---|---|
| Backplate gasket Super E | each | **106-1724** |
| | 10 pack | **106-2328`** |
| Backplate gasket Super B | each | **17-0196** |
| | 5 pack | **17-0197** |

## STEALTH AIR CLEANER GASKETS

| | | |
|---|---|---|
| Super E/G | each | **106-1724** |
| | 10 pack | **106-2328** |
| Muscle Air Cleaner (includes lanyards) | | **170-0137** |

## CARBURETOR GASKETS

| | | | |
|---|---|---|---|
| Bowl Gasket | Super E & G | each | **11-2386** |
| | | 10 pack | **11-2387** |
| | Super B & D | each | **11-2086** |
| | | 10 pack | **11-2091** |
| | L Series | each | **11-2070** |
| Pump cap o-ring - (two required) | | each | **50-8012** |
| | | 10 pack | **50-8100** |
| Idle Mixture Needle o-ring | | each | **500-0036** |
| | | 10 pack | **500-0148** |
| Bellows seal Bellows Seal, Accelerator Pump | | each | **11-2266** |
| | | 5 pack | **11-2279** |
| Accelerator pump diaphram | | each | **11-2282** |
| Manifold to Carb/ Throttle Body O-Rings | Super E | each | **50-8016** |
| | | 10 pack | **50-8094** |
| | Super G | each | **50-8015** |
| | | 10 pack | **50-8093** |
| | Super B | each | **50-8013** |
| | L Series 1¾" or 1⅞" | each | **50-8013** |
| Seat and Bowl Plug O-Ring | | each | **50-8009** |
| | | 10 pack | **50-8095** |

## TRANSMISSION GASKETS

| | |
|---|---|
| Seal, quad, 1 49/64" I.D. x 1⅞" O.D. x 1/16" Buna *11165* | **50-8045** |
| Seal, inner primary - 4-speed BT | **56-5101** |
| Seal, oil shifter shaft - 1984–'99 BT *12045* | **56-1064** |
| Seal, oil *12067B* | **56-3033** |
| Gasket, transmission access door *35652-79B, 35653-98A* | **56-1026** |

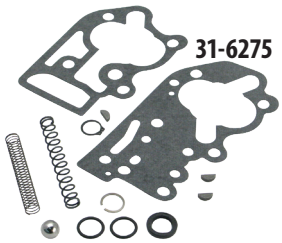








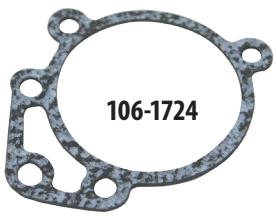


*All reference to HD® part numbers is for identification purposes only. We in no way are implying that any of S&S Cycle's products are original equipment parts or that they are equivalent to the corresponding HD® part number shown.*

# SUPER STOCK CRANKCASE REPLACEMENT PARTS
## FOR ALTERNATOR STYLE BIG TWIN ENGINES OF LESS THAN 4" CYLINDER BORE

**1.** Crankcase assembly, half ..... **N/A**

**2.** Race, right main bearing, All S&S BT
Standard *24599-93, 24599-58A, 24599-58B* ..... USA 1,2,3 **31-4004**
*Clearanced for .798" lift 1984-'99 style cam w/ 1" base circle*

**3.** Right main bearing assembly BT
White *24626-87A* ..... **31-4005**
Green *24628-87A* ..... **31-4016**
Red *24641-87A* ..... **31-4017**
Blue *24643-87A* ..... **31-4018**

**4.** Retaining ring, main bearing BT *11177A (each)* ..... **50-8057**
*5 pack* ..... **50-1004**

**5.** Cam needle bearing assembly BT
*9058* ..... USA USA 1,2,3 **31-4009**

**6.** Washer, cam lock - BT *25550-57A (each)* ..... USA **33-5201**
*5 pack* ..... USA **33-5213**

**7.** Cam thrust washer - BT
.050" *25550-36 (each)* ..... USA **33-5200**
.055" *25551-36 (each)* ..... USA **33-5202**
.060" *25552-36 (each)* ..... USA **33-5203**
.065" *25553-36 (each)* ..... USA **33-5204**
.070" *25554-36(each)* ..... USA **33-5205**
.075" *25555-36 (each)* ..... USA **33-5206**
.080" *25556-36 (each)* ..... USA **33-5207**
.090" *25558-36 (each)* ..... USA **33-5209**

**8.** Left Timken® main bearing assembly 1936-'99 S&S BT cases *9028* ..... USA **31-4013**

**9.** Timken Main Bearing Spacers, 1969-up BT
Fits 1¼" stock diameter shaft.
.0995" - .1005" *9124* ..... **31-4071**
.1015" - .1025" *9125* ..... **31-4072**
.1035" - .1045" *9126* ..... **31-4073**
.1055" - .1065" *9127* ..... **31-4074**
.1075" - .1085" *9128* ..... **31-4075**
.1195" - .1205" *9134* ..... **31-4076**

**10.** Spacer, drive sprocket, 1965-'99 S&S BT cases *24002-70* ..... USA **31-4011**

**11.** Spacer,Drive Sprocket,45A Charging System, ..... **N/A**

**12.** Seal, sprocket shaft oil 1936-'99 S&S BT cases
*12026B (each)* ..... USA **31-4010**
*5 pack* ..... USA **31-4110**

**13.** Bushing, oil pump shaft - All S&S BT cases Standard
*24641-36* ..... USA 1,2,3 **31-4008**

**14.** Tappet guide assembly ..... **N/S**

**15.** Screw, 12 pt. DHH ¼" -20 x ⅞" *3770* ..... **50-0068**
*4 pack* ..... **50-0068P**

**16.** Gasket, tappet guide–1948-'99 BT
Front *18634-48C(each)* ..... USA **33-5302F**
*10 pack front* ..... USA **33-5313F**
Rear *18633-48B, 18633-48D(each)* ..... USA **33-5302R**
*10 pack rear* ..... USA **33-5313R**
Set *18633-48 (each front & rear)* ..... USA **33-5302**
*10 pack set* ..... USA **33-5313**

**17.** Crankcase oil screen - 1948-'99 BT *24981-70, 24981-66*
*(each)* ..... **31-2010**
*5 pack* ..... **31-7008**

**18.** Crankcase oil screen spring - 1948-'99 BT
*24982-66, 24982-70 (each)* ..... **31-2011-S**

**19.** Cover screw o-ring - 1948-up S&S BT
*11105, 11273(each)* ..... **50-8008**
*10 pack* ..... **50-8078**

**20.** Cover screw - 1948-'99 S&S BT *26263-80, 26362-36*
*each* ..... **31-6021**
*5 pack* ..... **31-7005**

**21.** Cylinder stud
1984-up BT*16837-85C (each)* ..... USA **31-2321-S**
*8 pack* ..... USA **31-2321**
1984-up BT with +.500" cases *16832-86C*
*each* ..... USA **31-2331-S**
*8 pack* ..... USA **31-2331**

**22.** Crankcase Hardware
Alternator 1970-'99 and Alt/Gen Cases
Alignment Stud, 5⁄16" -24 x 5¾" *24806-36, 3506* ..... **31-2003**
(Position 5 & 6)
Screw, HHCS, 5⁄16" -18 x 3½" *3427* ..... **50-0117**
(Position 7)
Screw HHCS, 5⁄16" -24 x 5"
Zinc *3430* ..... **50-0119**
Chrome *(each)* ..... **50-0253-S±**
(Position 8)
Screw HHCS, ¼" -28 x 5½" *(each)* ..... **50-0090**
Screw HHCS, ¼" -28 x 5½" Chrome *(each)* ..... **50-0252-S±**

**23.** Nut, Hex - ¼"-28 *7683* ..... **50-5011**

**24.** Washer, flat - ¼" x ⅝" x 1⁄16"
Zinc *6194, 6245, 6703, 6736, 6228W, 6192 (each)* ..... **50-7021**
Chrome *(each)* ..... **50-7104-S±**

**25.** Nut, hex - 5⁄16"-24 zinc *7833, 7883* ..... **50-5023**

**26.** Washer, flat - 5⁄16" x 1⁄16" x 1⁄16" *6320, 70907-07, 6016, 6702* ..... **50-7034**

**27.** Hardware Kits *(includes studs, screws, nut and washers)*
1984-up BT–manufactured after 6-1-08
Chrome ..... **106-4913±**
1970-'99 big twin
Zinc Plated ..... **106-4908**
Chrome ..... **106-4909±**

**28.** Plug, timing hole *720* ..... USA 1,2,3 **31-2005**

**29.** Drain plug
Manufactured before 5-1-2000
a. ⅜"-18 NPT ..... **31-2006**
Manufactured after 5-1-2000
b. ½"-20 thread ..... USA 1,2,3 **50-8335**

**30.** Fitting, ⅛" x ⅛" pipe, male/female ..... **50-8112**

**31.** Oil pressure switch *26561-84*
*(Includes: 1 each switch, nut, lock washer.)*
..... USA 1,2,3 **31-2016**

**32.** Fitting, oil line - .375" x ⅛"-27 *62484-81* ..... **31-2021**

**33.** Plug, SH pipe - ⅛"-27
*each* ..... **50-8331A**
*10 pack* ..... **50-1015**

**34.** Fitting, primary oil return *63533-65, 63533-41A* ..... **31-2019**

**35.** Fitting, 45° hose–¼" pipe male x ⅜" male hose ..... USA 1,2,3 **50-8113**

**36.** Plug, SH pipe, ¼"-18, 1965-'69 S&S BT *765* ..... USA 1,2,3 **50-8330**

## Bolt Position Diagram

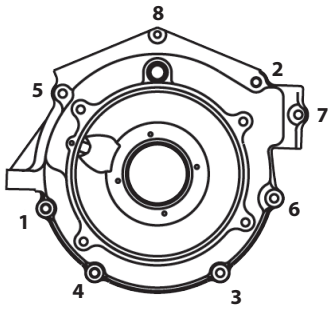





**37.** Fitting, hose - ⅛"-27 pipe male ..... USA1,2,3 **50-8115**
**38.** Dowel pin, .250" diameter x ½"
(1970-up S&S BT) *358, 366 (each)* ..... **50-8022**
*2 pack*..... **50-8022-2**
*5 pack*..... **50-8105**
**39.** Screw, SHC - 10-24 x 1" (Stator) (N/S) *2720*
*each* ..... **50-0044**
**40.** Screw, SHS - 10-24 x 5⁄16" - (Stator plug clamp) (N/S)
*each* ..... **50-0045**
**41.** Gearcover ..... **N/A**
**42.** Gearcover gasket 1970-up S&S BT ..... **N/A**
**43.** Gasket, crank position sensor hole..... **N/A**
**44.** Cover, crank position sensor hole..... **31-2056-S**
**45.** Screw, Torx, 8-32 x ⅜" *68042-99* ..... **50-0054-S**
**46.** Crank posititon sensor hole plug ..... **106-1189**
**47.** O-ring *(each)*..... **50-8270**
*5 pack*..... **50-8275**
**48.** Crank posititon sensor hole plug kit ..... **106-2997**
**49.** Washer,Right,Main Bearing,Thrust
**a.** 1.258" x 1.743" x .071",Steel ..... **31-4038***
**b.** 1.258" x 1.743" x .051",Steel ..... **31-4039***

**Thrust washers are normally used with 1958-'86 style bearings with loose rollers and drop in style cages, but can be used to position 1987-up bearings when used on early style flywheels.*

**(N/S) = Not Shown**
**N/A = No longer available**

*All reference to HD® part numbers is for identification purposes only. We in no way are implying that any of S&S Cycle's products are original equipment parts or that they are equivalent to the corresponding HD® part number shown.*

± ⚠ WARNING: Cancer and Reproductive Harm–www.P65Warnings.ca.gov

# SUPER STOCK CRANKCASE REPLACEMENT PARTS

## FOR ALTERNATOR/GENERATOR STYLE BIG TWIN ENGINES OF LESS THAN 4" CYLINDER BORE

**1.** Crankcase assembly, half ..... **N/A**

**2.** Race, right main bearing, All S&S BT
Standard *24599-93, 24599-58A, 24599-58B* ..... **31-4004**
Clearanced for .798" lift 1984-'99 style cam w/1" base circle

**3.** Right main bearing assembly BT
White *24626-87A* ..... **31-4005**
Green *24628-87A* ..... **31-4016**
Red *24641-87A* ..... **31-4017**
Blue *24643-87A* ..... **31-4018**

**4.** Retaining ring, main bearing BT *11177A (each)* ..... **50-8057**
*5 pack* ..... **50-1004**

**5.** Cam needle bearing assembly *9058* ..... **31-4009**

**6.** Washer, cam lock
1958-'99 bt *25550-57A (each)* ..... **33-5201**
*5 pack* ..... **33-5213**

**7.** Cam thrust washer - BT
.050" *25550-36 (each)* ..... **33-5200**
.055" *25551-36 (each)* ..... **33-5202**
.060" *25552-36 (each)* ..... **33-5203**
.065" *25553-36 (each)* ..... **33-5204**
.070" *25554-36 (each)* ..... **33-5205**
.075" *25555-36 (each)* ..... **33-5206**
.080" *25556-36 (each)* ..... **33-5207**
.090" *25558-36 (each)* ..... **33-5209**

**8.** Left Timken® main bearing assembly 1936-'99
S&S BT cases *9028* ..... **31-4013**

**9.** Timken Main Bearing Spacers, 1969-up bt
*Fits 1¼" stock diameter shaft.*
.0995"–.1005" *9124* ..... **31-4071**
.1015"–.1025" *9125* ..... **31-4072**
.1035"–.1045" *9126* ..... **31-4073**
.1055"–.1065" *9127* ..... **31-4074**
.1075"–.1085" *9128* ..... **31-4075**
.1195"–.1205" *9134* ..... **31-4076**

**10.** Spacer, drive sprocket
1936-'64 S&S BT cases ..... **31-4014**
1965-'99 S&S BT cases *24002-70* ..... **31-4011**

**11.** Washer, Countersunk, ¼" x ½" ..... **106-3848**

**12.** Seal, sprocket shaft oil 1936-'99 S&S BT cases *12026B* .....
*(each)* ..... **31-4010**
*5 pack* ..... **31-4110**

**13.** Bushing, oil pump shaft - All S&S BT cases
Standard *24641-36* ..... **31-4008**

**14.** Tappet guide, 1936-'47 OHV bt & S&S KN-Series
*Set* ..... **106-2410**
*Front 18600-36* ..... **106-2665**
*Rear 18610-36* ..... **106-2666**
Tappet Guide, S&S SH & P series and conversion kits only, uses V-Series lifters
*Set* ..... **33-5450±**
*Front* ..... **33-5450F±**
*Rear* ..... **33-5450R±**

**15.** Screw
Screw, 12pt, DHH, ¼"-20 x ⅞" *3770 (each)* ..... **50-0068**
*4 pack* ..... **50-0068P**
Screw,Slotted, Oval, ¼"-24 x ⅝" *2329* ..... **106-3847**
Screw,Slotted,Oval, "-20 x ⅝" ..... **500-0043**

**16.** Gasket, tappet guide–1948-'99 BT
Front *18634-48C* (each) ..... **33-5302F**
*10 pack front* ..... **33-5313F**
Rear *18633-48B, 18633-48D* (each) ..... **33-5302R**
*10 pack rear* ..... **33-5313R**
Set *(each front & rear) 18633-48B, 18633-48D* ..... **33-5302**
*10 pack set* ..... **33-5313**
Gasket, tappet guide–KN 1936-'47 OHV *18632-36*
*(each)* ..... **106-2561**
*2 pack* ..... **106-2563**

**17.** Crankcase oil screen - 1948-'99 BT *24981-70, 24981-66*
*(each)* ..... **31-2010**
*5 pack* ..... **31-7008**

**18.** Crankcase oil screen spring - 1948-'99 bt *24982-66, 24982-70*
*(each)* ..... **31-2011-S**

**19.** Cover screw o-ring - 1948-up S&S BT *(each)* ..... **50-8008**
*10 pack* ..... **50-8078**

**20.** Cover screw - 1948-'99 S&S BT *26263-80, 26362-36*
*(each)* ..... **31-6021**
*5 pack* ..... **31-7005**

**21.** Cylinder stud
1936-'84 BT Standard *16831-30, 16837-30* ..... **31-2328-S**
*8 pack* ..... **31-2328**
1936-'84 BT +5⁄16" longer *16837-78* ..... **31-2324-S**
*8 pack* ..... **31-2324**

**22.** Crankcase Hardware
Hardware Kit
Alt/Gen Cases
Alignment Stud, 5⁄16" -24 x 5¾" *24806-36, 3506* ..... **31-2003**
(Position 1)
Front Chain Oiler Bolt ..... **106-4795**
(Position 5 & 6)
Screw, HHCS, 5⁄16" -18 x 3½" ..... **50-0117**
(Position 7)
Screw HHCS, 5⁄16" -24 x 5" zinc *3430* ..... **50-0119**
Chrome *(each)* ..... **50-0253-S±**
(Position 8)
Screw HHCS, ¼" -28 x 5½" *(each)* ..... **50-0090**
Screw HHCS, ¼" -28 x 5½" Chrome *(each)* ..... **50-0252-S±**

**23.** Nut, Hex - ¼"-28 *7683* ..... **50-5011**

**24.** Washer, flat - ¼" x ⅝" x 1⁄16"
Zinc *7035, 7036 (each)* ..... **50-7021**
Chrome *(each)* ..... **50-7104-S±**

**25.** Nut, hex - 5⁄16"-24 zinc *7833, 7883* ..... **50-5023**

**26.** Washer, flat - 5⁄16" x 11⁄16" x 1⁄16" *6320, 70907-07, 6016, 6702* ..... **50-7034**

**27.** Plug, timing hole *720* ..... **31-2005**

**28.** Drain plug,
⅜"-18 NPT Manufactured before 5-1-2000 ..... **31-2006**
½"-20 thread Manufactured after 5-1-2000 ..... **50-8335**

**29.** Fitting, ⅛" x ⅛" pipe, male/female ..... **50-8112**

**30.** Oil pressure switch *26561-84*
*(Includes: 1 each switch, nut, lock washer)* ..... **31-2016**

**31.** Dowel pin .375" diameter x ¾" 1936-'64 S&S BT ..... **50-8017**

**32.** Fitting, oil line - .375" x ⅛"-27 *62484-81* ..... **31-2021**

**33.** Plug, SH pipe - ⅛"-27 *(each)* ..... **50-8331A**
*10 pack* ..... **50-1015**

**34.** Fitting, primary oil return *63533-65, 63533-41A* ..... **31-2019**

**35.** Fitting, 45° hose–¼" pipe male x ⅜" male hose ..... **50-8113**

**36.** Plug, SH pipe, ¼"-18, 1965-'69 S&S BT *765* ..... **50-8330**

**37.** Fitting, hose - ⅛"-27 pipe male ..... **50-8115**

**38.** Dowel pin, .250" diameter x ½"
(1970-up S&S BT) *358, 366 (each)* ..... **50-8022**
*2 pack* ..... **50-8022-2**
*5 pack* ..... **50-8105**

**39.** Screw, SHC - 10-24 x 1" (Stator) N/S *2720 (each)* ..... **50-0044**

**40.** Screw, SHS - 10-24 x 5⁄16" - (Stator plug clamp) N/S ..... **50-0045**

**41.** Fitting, oil line *63533-15* ..... **31-2018**

**42.** Idler gear shaft - 1936-'69 BT *25791-36* ..... **31-2039**

**BOLT POSITION DIAGRAM**

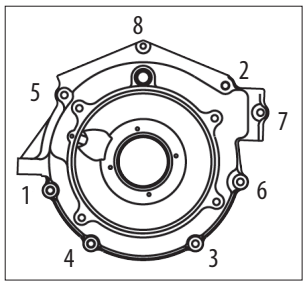





**43.** Screw, SHC ¼"-20 x 2" *(Idler gear shaft)*
*25794-36* ..... **50-0013**
**44.** Screw, SHC ¼" -20 x 3¼" *(Circuit breaker drive gear shaft.)*
*1430* ..... **50-0012**
**45.** Shaft, circuit breaker drive gear , 1936-'69 BT
*25856-36* ..... **31-2037**
**46.** Washer, lock - ¼" *7035, 7036*..... **50-7019**
**47.** Screw, HHC ¼" -20 x ½" 1936-'65
S&S BT timer *3728*..... **50-0014**
¼"-20 x 1" 1966-'69 S&S BT timer *2551W* ..... **50-0018**
**48.** Screw, standard RH ¼"-20 x ½" *2759*..... **50-0015**
**49.** Gearcover (See page 138)
**50.** Gearcover gasket 1936-'69 S&S BT *25225-36A* ..... **31-2030**
**51.** Spacer, motor mount - 1936-'47 BT *24795-48* ..... **31-2017**
**52.** Washer, Right, Main Bearing, Thrust
1.258" x 1.743" x .071",Steel..... **31-4038***
1.258" x 1.743" x .051",Steel..... **31-4039***
**53.** Bracket Kit, Oil Filter 1936-69 bt *(includes 56-66)*..... **106-3134±**
**54.** Fitting, Straight, ¾-16 UNF 2A x 1" *26352-95A*..... **50-8197-S**
**55.** Bracket, Oil Filter ..... **N/A**
**56.** Gasket, Oil Filter Mount..... **106-4423**
**57.** Screw, SHC, 5⁄16-24 x 2-¾" ..... **50-0017**
**58.** Plug, Pipe, ¾" x 1⁄8-27 x .188"..... **50-8331A**
*10 pack* ..... **50-1015**
**59.** Fitting, Pipe, 90°, 1⁄8-27 x .375" ..... **50-8110**
Fitting, Hose, Straight, 1⁄8-27 x .500" ..... **50-8115**
**60.** Clamp, Hose, 5⁄8" - 7⁄8" ..... **50-8002**
**61.** Hose, Oil Line Return, 375" x 12"..... **N/A**
**62.** Fitting, Pipe, 45°, 1⁄8-27 x 1⁄8-27 ..... **50-8112**
**63.** Fitting, Pipe, 90°, Male/Female, 1⁄8-27
*26338-68, 26561-84A, 26561-81A, 26338-68A*..... **106-2682**
*5 pack* ..... **50-1007**

*Thrust washers are normally used with 1958–'86 style bearings with loose rollers and drop in style cages, but can be used to position 1987–up bearings when used on early style flywheels
(N/S) = Not Shown
N/A = No longer available

± ⚠ WARNING: Cancer and Reproductive Harm–www.P65Warnings.ca.gov

# FLYWHEEL REPLACEMENT PARTS
## FOR 1930–'84 BIG TWIN ENGINES

**1.** Sprocket Shaft
- 1930-1954 Including UL SVBT stock & S&S E flywheels (straight–roller bearing) *(includes #2, 3, 4)* *24001-30* ..... **33-2001**
  *Note: This shaft uses the larger 55-later thread for added strength and includes the motor sprocket nut. The stock nut will not fit.*
- 1955-1964 S&S SE/SL flywheels *(includes #5 & 6)* (spline - Timkin®) ..... **33-2002**
- 1965-1969 S&S SE/SL flywheels *(includes #5 & 6)* (spline - Timkin®) ..... **33-2003**
- 1970-1999 S&S SE/SL flywheels *(includes #5 &6)* (spline - Timkin®) ..... **33-2004**

**2.** Key ..... **50-8224**
**3.** Sprocket Shaft Nut ..... **33-2031**
**4.** Motor Sprocket Nut ..... **33-2032**
**5.** Key ..... **50-8225-S**
**6.** Sprocket Shaft Nut ..... **33-2033**
**7.** Pinion Shaft
- 1939-1953 stock/ S&S E flywheels (spline) *(includes #8 & 12)*
  Standard ..... **33-2021**
- 1958-early 1981 stock & S&S L/AL/SE flywheels (tapered) *(includes #8, 12, 10, 14, 15)*
  Standard *24006-54A, 24006-73* ..... **33-2024**
  .001" OS ..... **33-2025**
- Late 1981-1984 stock/ S&S BL/SL/SM flywheels (tapered) *(includes #10, 14, 15, 9, 13)*
  Standard ..... **33-2027**

**8.** Key ..... **50-8224**
**9.** Key *11218* ..... **50-8222-S**
*5 pack* ..... **50-1009**
**10.** Pinion/Oil Pump Key ..... **50-8221-S**
*5 pack* ..... **50-1008**
**11.** Pinion Shaft Nut ..... **N/A**
**12.** Pinion Shaft Nut ..... **33-2031**
**13.** Pinion Shaft Nut ..... **33-2034**
**14.** Bearing Retaining Ring *11177A* ..... **50-8057**
*5 pack* ..... **50-1004**

**15.** Meter Plug
- .0625" hole ..... **50-8316**±
- .0925" hole ..... **50-8317**±
- no hole ..... **50-8314**±

**16.** Front Rod Race, 1941-1984 *24356-36A* ..... **34-4005**
**17.** Rear Rod Race *24345-36A* ..... **34-4006**
**18.** Wristpin Bushing *24334-36* ..... **34-4007**
**19.** Race & Bushing Set *(includes #16, 17, 18)* ..... **34-4040**
**20.** Cage and Bearing Set, Standard *24346-87A, 24385-40B* ..... **34-4010**
**21.** Crankpin
- 1937-'53 EL / 1940-'48 UL/ULH models *(includes #22 & 23)**
  Standard ..... **34-2001**
  **Stepped crankpin for 1936-'52 (61") engines with stock flywheels.*
- 1941-early 1981 *(includes #22 & 23)*
  Standard ..... **34-2003**
  .001" OS ..... **34-2007**
  .002" OS ..... **34-2008**
- Late 1981-1984 *(includes #10 & 23)*
  Standard ..... **34-2102**
  .001" OS ..... **34-2103**
  .002" OS ..... **34-2105**
  .003" OS ..... **34-2106**

**22.** Key ..... **50-8223-S**
**23.** Crankpin Nut
- 1937-'53 EL / 1940-'48 UL/ULH models ..... **34-2005**
- 1941-early 1981 & late 1981-1984 ..... **34-2104**
- 1941-1984 Special Retro Engine ..... **34-2006**

**24.** Connecting Rod Assembly
- 1936-1952, Heavy Duty (Stepped crankpin) ..... **34-7003**
- 1941-1981, Heavy Duty ..... **34-7004**
- 1981-1984, Heavy Duty ..... **34-7011**

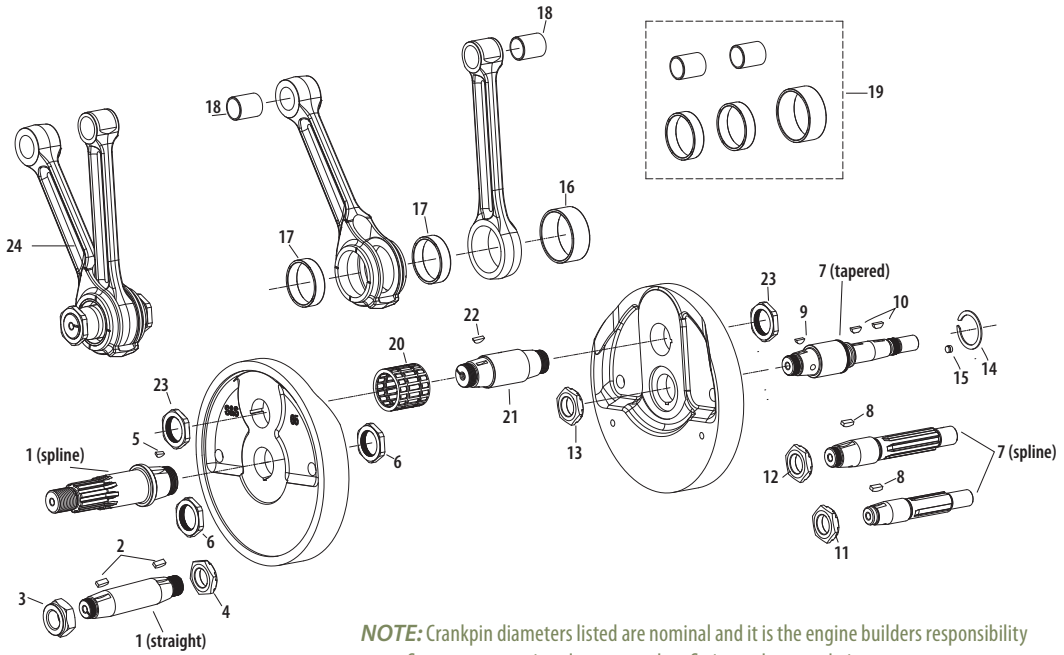


***NOTE:*** Crankpin diameters listed are nominal and it is the engine builders responsibility to confirm correct running clearances when fitting rods to crankpins.

± WARNING: Cancer and Reproductive Harm–www.P65Warnings.ca.gov

# FLYWHEEL REPLACEMENT PARTS
## FOR 1957–'85 XL ENGINES

**1.** Sprocket Shaft (includes #2 & 3)
1957-1976 XL w/S&S SB flywheels ..... **33-2301**
1977-1985 XL w/S&S D/SB/SBD/SCD/SC/SCDR/SCR flywheels ... **33-2302**
**2.** Key ..... **50-8224**
**3.** Sprocket Shaft Nut ..... **33-2331**
**4.** Pinion Shaft
Stock 1957-1976 XL and S&S B/SB flywheels (includes #5 & 6)
Standard ..... **33-2321**
Stock 1977-early 1981 XL and S&S B/BD/SB/SBD/ flywheels (includes #5, 6, 8)*
Standard ..... USA **33-2322**
*requires 1977-1986 main bearing
Stock late 1981-1985 XL and S&S C/SC/SCD/SCDR flywheels (includes #6, 7, 8)
**6.** Pinion Shaft Nut ..... **33-2332**
**7.** Key ..... **50-8222-S**
*5 pack* ..... **50-1009**
**8.** Meter Plug - stock 1977-1985 XL and S&S B/BD/SB/SBD/C/S/SCD/SCDR flywheels
.0626" ..... **50-8316**
**9.** Front Rod Race ..... USA **34-4505**
**10.** Rear Rod Race (one) ..... USA **34-4506**
**11.** Wrist Pin Bushing ..... USA **34-4507**
**12.** Race & Bushing Set (includes #9, 10, 11)
1957-1985 XL (all stock) and all S&S rods ..... USA **34-4540**
**13.** Alloy Bearing Cage Set ..... USA **34-4520**
**14.** Bearing Set (std.) ..... USA **34-4521**
**15.** Crankpin (std.)
1957-early 1981 XL w/ S&S connecting rods (includes #16 & 17)
Standard ..... **34-2503**
Late 1981-1985 XL w/ S&S connecting rods (includes #7 & 17)
Standard ..... **34-2602**
.001" OS ..... **34-2603**
.002" OS ..... **34-2605**
**16.** Crankpin Key ..... **50-8223-S**
*5 pack* ..... **50-1010**
**17.** Crankpin Nut ..... **34-2504**
**18.** Connecting Rod Assembly
1957-early 1981 XL (stock bore) 7.440" rod length
Heavy Duty ..... USA **34-7500**
Late 1981-1985 XL (stock bore) 7.440" rod length
Heavy Duty ..... USA **34-7510**

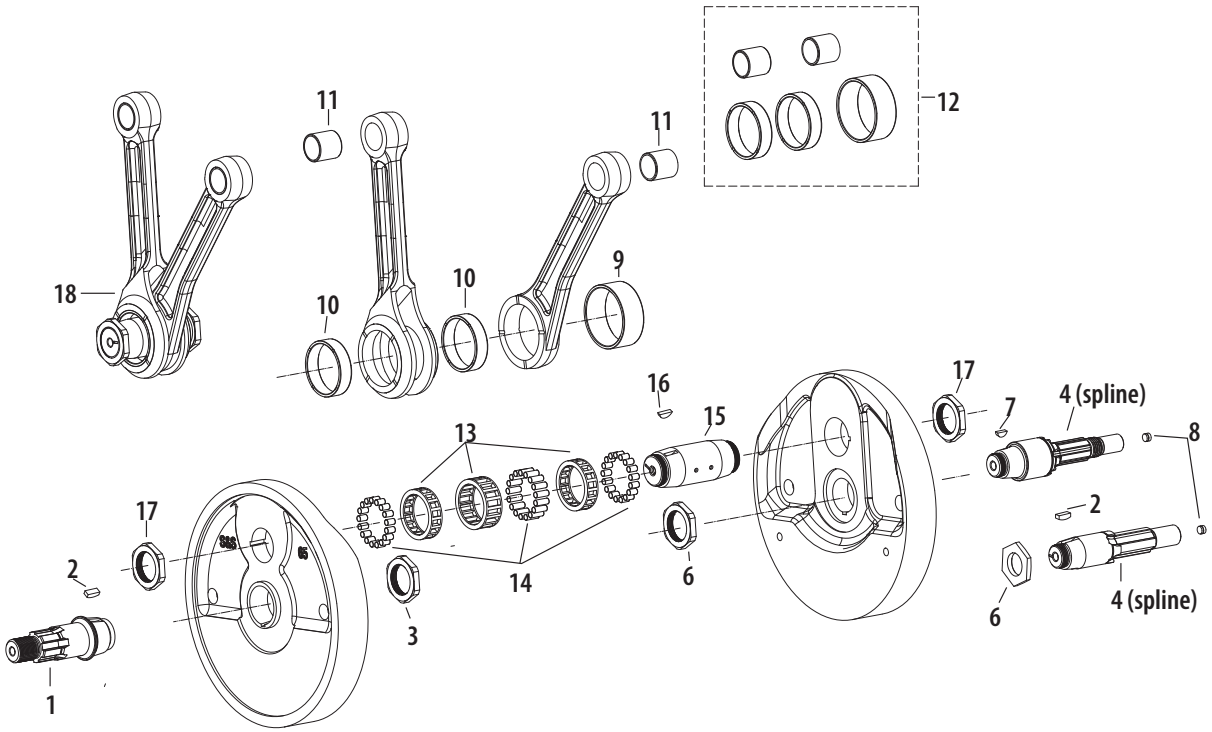

# STANDARD BILLET OIL PUMP KIT REPLACEMENT PARTS

**1.** Pump body assembly
Fits 1936-'69 ..... **31-6048**
Fits 1970-'91 ..... **31-6050**
**2.** Shaft, idler *26327-68* ..... USA **31-6004**
**3.** Seal, drive shaft *26227-58* ..... USA **31-6005**
**4.** Gear, return drive *26315-68A* ..... USA **31-6013**
**5.** Gear, return idler *26317-68A* ..... USA **31-6014**
**6.** Gear, supply drive *26328-74, 26320-36* ..... USA **31-6015**
**7.** Gear. supply idler *26326-62A* ..... USA **31-6016**
**8.** Shaft, drive *26346-70* ..... USA 1,2,3 **31-6011**
**9.** Key, drive shaft *26347-15 each* ..... **50-8220-S**
*10 pack* ..... **50-8229**
**10.** Plug, 1/8"-27
*each* ..... **50-8331A**
*10 pack* ..... **50-1015**
**11.** Check ball valve *8866, 8873* ..... USA 1,2,3 **50-8091**
**12.** Spring, check valve *26363-36, 26363-56, 26262-80*
*each* ..... **31-6022**
*10 pack* ..... **31-6092**
**13.** Relief valve *26400-82, 26400-82B* ..... **31-6082**
**14.** Spring, relief valve *26207-83*
*each* ..... **31-6018**
*10 pack* ..... **31-6084**
For S&S KN-Series engines *(each)* ..... **106-4679**
**15.** Screw, check valve & relief valve cover
*26263-80, 26362-36 each* ..... **31-6021**
*5 pack* ..... **31-7005**
**16.** O-ring *11105, 11273 (each)* ..... **50-8008**
*10 pack* ..... **50-8078**
**17.** Pump cover assembly
Pre-1992 (Top or bottom fittings; accepts pressure gauge.)
*31-6041* ..... **31-6059**
**18.** Fitting, front chain hose ..... **50-8116**
**19.** Plug, pipe 1/16"-27 x 1/4" pipe ..... USA **50-8332**
**20.** Elbow, supply/return *26338-68, 26561-84A, 26561-81A, 26338-68A*
*each* ..... **106-2682**
*5 pack* ..... **50-1007**
**21.** Fitting, supply/return hose ..... USA 1,2,3 **50-8115**
**22.** Return fitting, compression *63523-92* ..... USA 1,2,3 **50-8120**
**23.** Seal, tubing, 3/8" x 1/2" O.D. x 1/4" Viton ..... **50-8271**
**24.** Screw, chain oiler adjusting *63614-72, 63610-70, 26383-32* ..... **31-6026**
**25.** Locknut, chain oiler *each 7634, 7638* ..... **50-5000**
**26.** Washer, chain oiler adjuster
*each 6156* ..... **50-7008**
**27.** Plug, 1/4"-20 ..... **50-0069**
*2 pack* ..... **50-0069P**
**28.** Screws, mounting
1/4"-24 x 1 1/2" - 1936 -'78 (HHCS)
*each* ..... **50-0082**
1/4"-24 x 2 1/4" - 1936 -'78 (HHCS) *5430W*
*each* ..... **50-0088**
1/4"-20 x 1 1/2" - 1979-'99 (HHCS) ..... **50-0080**
1/4"-20 x 2 1/4" - 1979-'99 (SHCS) *4717A* ..... **50-0078**
1/4-20 x 1-1/2" - 1979–'99 (SHCS) *4718A* ..... **50-0079**
**29.** Washer, 1/4" *(each)* ..... **50-7017**
*12 pack* ..... **50-7013**
**30.** Retaining ring *695-36, 26348-36 each* ..... **50-8058**
*10 Pack* ..... **50-8106**
**31.** Retaining ring, external *11002 each* ..... **50-8059**
*10 Pack* ..... **50-8107**
**32.** Gear, pump drive, 24T *26345-73* ..... **33-4230**
**33.** Gear, pinion shaft pump drive
A. 1939-'53 splined ..... **33-4237**
B. 1954-'89 *26349-73, 26349-73A* ..... **33-4232**
**34.** Gear, Steel breather valve
1936-Early 47
Standard *25300-36* ..... **106-5070**
+.030" ..... **106-6012**
1948-Early 77
Standard *25313-73* ..... **33-4246**
+.030" ..... **33-4247**
Late 1977-99
Standard *25310-82A, 25313-77B, 25311-90* ..... **33-4241**
+.030" ..... **33-4242**
**35.** Shim Steel Breather Kit
*8 pack* (Includes one of each thickness) ..... **33-4249**
35a. .+.100" thick. ..... **33-4200**
35b. .+.110" thick *25320-79* ..... **33-4201**
35c. +.120" thick *25322-79* ..... **33-4202**
35d. +.130" thick *25325-79, 25320-82* ..... **33-4203**
35e. +.140" thick *25322-82, 25327-79* ..... **33-4204**
35f. +.150" thick *25325-82* ..... **33-4205**
35g. +.160" thick *25327-82* ..... **33-4206**
35h. +.170" thick. ..... **33-4207**
**36.** Drill jig, oil pump ..... **53-0013**
**37.** Primary chain oiler screw kit (N/S) ..... **31-6291**±

**N/S:**
Gasket rebuild kit (N/S) *Includes key and retaining ring.*
A. 1936-'91 ..... **31-6271**
Master rebuild kit - (N/S)
Includes: gasket rebuild kit, seal, retaining ring, relief valve spring, check valve spring, check valve, ball, and cover screw o-rings.
A. 1936-'91 ..... **31-6275**

Oil pump mounting hardware kit (N/S) ..... **31-6288**
Hardware kit, oil pump cover (N/S) ..... **31-6283**±

**(N/S) = Not Shown**

*All reference to HD® part numbers is for identification purposes only. We in no way are implying that any of S&S Cycle's products are original equipment parts or that they are equivalent to the corresponding HD® part number shown.*

± WARNING: Cancer and Reproductive Harm–www.P65Warnings.ca.gov

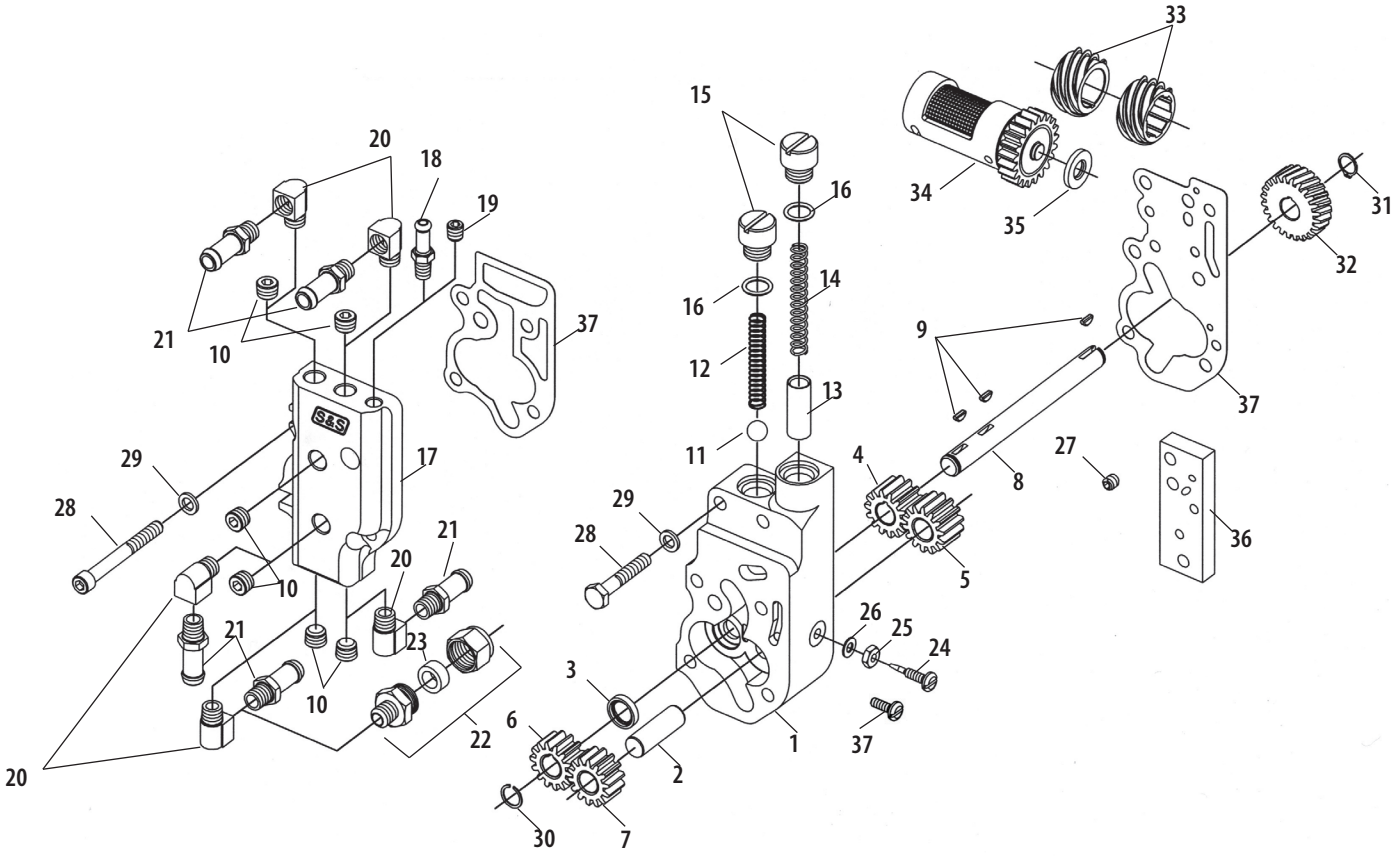
33
15
20
18
19
16
34
35
31
32
14
16
21
10
37
9
12
13
37
11
4
27
8
29
17
28
29
28
21
20
10
5
36
26
25
24
21
23
3
10
6
22
1
37
2
20
30
7

# GENERATOR STYLE GEARCOVER REPLACEMENT PARTS

**1.** Gearcover assembly–(See page 138)

**2.** Gasket, Gear cover
- Stock crankcases, 1936-'69 *25225-36C* ..... **106-2072**
- S&S crankcases, 1936-'69 *25225-36A* ..... **31-2030**

**3.** Bushing, cam, 1936-'69 *25581-36* ..... **31-4025**

**4.** Bushing, pinion shaft
- 1954-'72 *25582-54A, 22582-73* ..... **31-4020**
- 1936-'53 *25582-36* ..... **31-4029**

**5.** Screw, gear cover mounting
- Stock crankcases
  - Slotted countersunk, oval, ¼-24 x 1⅛", cadmium *2341HW, 2341 each* ..... **106-2013**
- S&S crankcases
  - SHCS ¼"-20 x ⅞" ..... **50-0025**
  - Slotted countersunk ¼"-20 x 1⅛" ..... **106-4732**

**6.** Washer (S&S crankcases only) .260" x .425" x .060 chrome
- *each* ..... **50-7017±**
- *12 pack* ..... **50-7013±**

**7.** Generator bolt
- Stock crankcases
  - HH countersunk, 5⁄16"-24 x 3¼" cadmium ..... **106-2107**
  - Slotted countersunk oval ¼ "-24 x 3" *(each)* ..... **106-3814**
- S&S crankcases
  - SHCS 5⁄16"-24 x 2¾" ..... **50-0017**

**8.** Oil passage screw, slotted hollow, includes nylon washer, 1963-'65 BT ..... **106-2014**

**9.** Washer, flat, 5⁄16" x 9⁄16" x .025" white nylon ..... **N/A**

**10.** Screw, SHS–¼"-20 x 3⁄16" ..... **50-0024**
- *2 pack* ..... **50-0024P**

**11.** Pipe plug, SH ⅛"-27 *each* ..... **50-8331A**
- *10 pack* ..... **50-1015**

**12.** Oil line fitting *17330-42* ..... **106-4734**

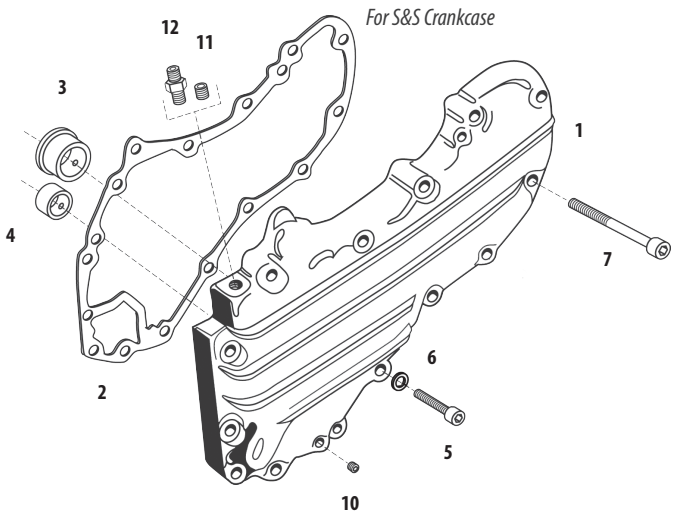


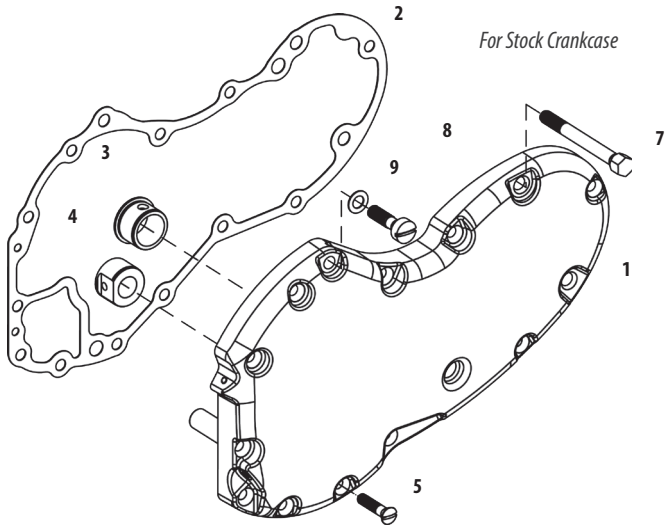


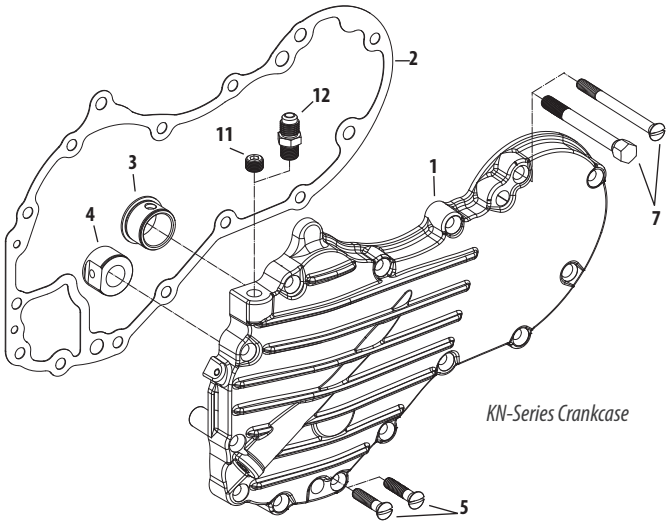


*All reference to HD® part numbers is for identification purposes only. We in no way are implying that any of S&S Cycle's products are original equipment parts or that they are equivalent to the corresponding HD® part number shown.*

± ⚠ WARNING: Cancer and Reproductive Harm–www.P65Warnings.ca.gov

# GEARCOVER KIT REPLACEMENT PARTS

**1.** Gearcover assembly–(See page 139)

**2.** Gasket, gearcover
1970-'99 BT *25225-93A, 25225-93B, 25225-70C, 25257-80*
*each* ..... **31-2107**
*10 pack* ..... **106-0232**

**3.** Outer Cover for Cast Gearcovers 1970-99 bt
Flangeless type - chrome ..... **31-0238±**

**4.** Gasket, outer cover - 1970-'99 BT
Flanged type *each* ..... **31-0218**
*5 pack* ..... **31-0256**
Flangeless type *each)* ..... **31-0237**
*5 pack* ..... **31-0261**

**5.** Ignition cover, inner - 1970-'99 BT
Flangeless type. ..... **31-0235**

**6.** Gasket, ignition cover - 1970-'99 BT
*32591-80, 32591-70 each* ..... **31-0225**

**7.** Ignition cover, outer - 1970-'99 BT
Chrome, billet S&S Logo ..... **31-0332±**
Billet, Gloss Black with S&S Logo ..... **310-0897**

**8.** Screw, RSH - 8-32 x ½" *(replaces stock rivets)*
Stainless Steel *each* ..... **50-0048**
Chrome *each* ..... **50-0266-S±**

**9.** Screw, SH
10-24 x ⅜" - chrome for billet cover ..... **50-0023±**

**10.** Washer, flat .192" x 5⁄16" x .035"
*each 6150W* ..... **50-7009**

**11.** Screw, SH - Use in all positions
1970-'99 BT - ¼"-20 x 1¼" *4740A, 3482A*
Zinc *each* ..... **50-0008**
Chrome ..... **50-0257-S±**

**12.** Washer, flat
¼" x .474" x .050" *each* ..... **50-7020**
¼" Flat washer, chrome, billet covers
*each* ..... **50-7017±**
*12 pack* ..... **50-7013±**

**16.** Wire harness clip *38711-93* ..... **31-2029**

**19.** Cam bushing, gearcover
1970-'99 BT *25581-70* ..... **31-4019**

**20.** Pinion shaft bushing, gearcover
1973-'99 BT *25582-93, 25582-73* ..... **31-4031**

**21.** Gearcover oil seal 1970-'99 BT *83162-51*
*each* ..... **31-4022**

**22.** Screw, timing mechanism *32606-82*
*each* ..... **31-0224**
*2 pack* ..... **31-0224P**

**23.** Screw, standard panhead 8-32 x ⅜" *each* ..... **50-0004**

**24.** Clip, outer cover *each* ..... **31-0233**

**N/A= No longer available**

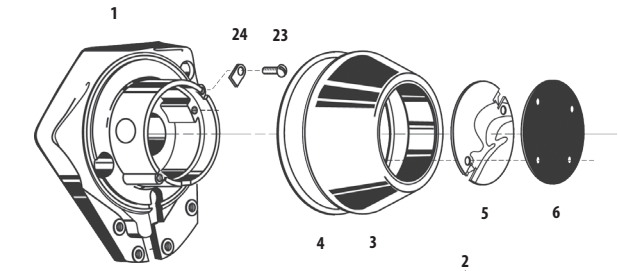


*Cast Alternator Style Flangeless*

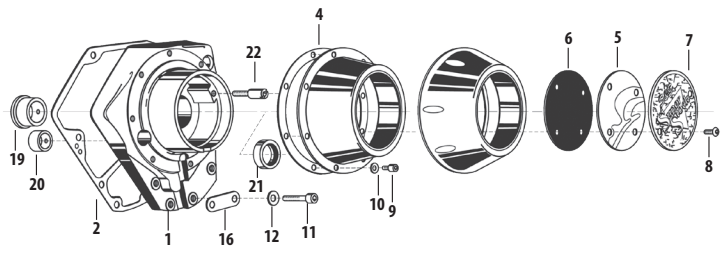


*Cast Alternator Style Flanged*
*Chrome or Billet Outer Cover*

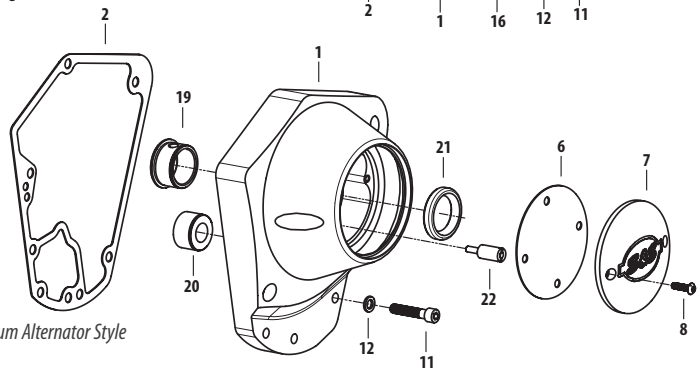


*Billet Aluminum Alternator Style*

*All reference to HD® part numbers is for identification purposes only. We in no way are implying that any of S&S Cycle's products are original equipment parts or that they are equivalent to the corresponding HD® part number shown.*

± ⚠ WARNING: Cancer and Reproductive Harm–www.P65Warnings.ca.gov

# SUPER STOCK® CYLINDER HEADS REPLACEMENT PARTS
## FOR 1966–'84 BIG TWIN ENGINES

**1.** Cylinder head (See page 147)

**2.** Valves
Intake
1.950" *18075-80, 18075-81, 18078-80, 18078- 81, 18078-81* ..... **90-2015**
Exhaust–1948-'84 BT
1.720" *18086-80, 18086-81, 18089-80, 18089-81* ..... **90-2022**

**3.** Valve seats
Intake–1.940"
Standard *18020-79, 18018-66, 18056-66B* ..... **90-2017**
+.002" oversize ..... **N/A**
Exhaust–1.750"
Standard *18017-66, 18055-66B, 18010-79* ..... **90-2018**
+.010" oversize ..... **90-2121**

**4.** Valve guide - cast - 1980–'84 BT
Intake or Exhaust
Standard *18017-66, 18055-66B, 18010-79* ..... **90-2240**
+.001" *18109-81A* ..... **90-2241**
+.002" *18108-81A, 90-2232* ..... **90-2242**
+.003" *18107-81A, 90-2233* ..... **90-2243**
+.004" *18106-81A, 90-2234* ..... **90-2244**
+.006" *18110-81A* ..... **90-2246**
+.060" ..... **90-2249**

**5.** Valve guide seal–intake or exhaust
1981-'84 BT *18000-81 4 pack* ..... **900-1005**

**6.** Valve spring shim - Late 1981-'84 BT
.005" x .765" x 1.500" ..... **50-7121**
.015" x .765" x 1.500" ..... **50-7122**
.025" x .765" x 1.500" ..... **50-7123**

**7.** Valve spring kit–Late 1981-'84
(Includes springs, top & bottom collars, keepers shims)
.590" lift - steel top collars ..... **90-2063**

**8.** Valve spring keeper–intake or exhaust
1936-'84 BT *18228-36 each* ..... **90-2037-S**
*8 pack* ..... **50-7165**

**9.** Screw, SH - 5⁄16"-18 x 1" *2708A* ..... **50-0101**

**10.** Lock washer - 5⁄16" *7041* ..... **50-7032**

**11.** Exhaust pipe gasket - 1966-'84 BT *53834-68A* ..... **93-1004-S**

**12.** Head mount bolt - 7⁄16"-14 x 1¼" *3782 each* ..... **50-0171**

**13.** Flat washer - 7⁄16" x 15⁄16" x 1⁄8" *6495HW* ..... **50-7064**

**14.** Rocker cover mounting screw - 1966-'84 BT
Hex head - 5⁄16"-18 x 1½" *2818 each* ..... **50-0109**
Hex head - 5⁄16"-18 x 2½" *3501 each* ..... **50-0104**

**15.** Flat washer - 5⁄16" *6320, 70907-07, 6016, 6702* ..... **50-7034**

**16.** Rocker cover gasket 1966-'84 BT *17540-69, 17540-69A*
*each* ..... **90-4040**
*10 pack* ..... **90-4064**

**17.** Intake manifold (See page 162)

**18.** Manifold seal
O-ring - 1955-'78 BT *27060-55*
*each* ..... **50-8046**
*10 pack* ..... **50-8132**
Band - 1979-'84 BT *27062-78*
*each* ..... **16-0238**
*10 pack* ..... **16-0245**

**19.** Manifold mounting clamp
O-ring type heads - 1955-'78 BT *27063-57* ..... **16-0230**
Band type heads - 1979-'85 BT *27063-80, 27063-78* ..... **16-0231**

**20.** Head bolt assembly, stainless - 1948-'84 BT
(Includes head bolt & washer.) *6469HW*
*10 pack* ..... **93-3024**
20a. Head Bolt, each ..... **93-3024-S**
20b. Head bolt washer - 1936-'84 BT
(For part #90-3024, #90-3026 & #90-3040) ..... **93-3025**

**21.** Head gasket, copper - 1966-'84 BT
3 7⁄16" & 3½" bore *16770-66B each* ..... **93-1041**
*10 pack* ..... **93-1061**
3 5⁄8" bore *each* ..... **93-1042**
*10 pack* ..... **93-1062**

**22.** Fitting, oil return, 1⁄8"-27 pipe *63533-65, 63533-41A* ..... **31-2019**

**23.** Plug, oil return, 1⁄8"-27 pipe *each* ..... **50-8331A**
*10 pack* ..... **50-1015**

N/A= No longer available

### TOP END REBUILD GASKET KITS FOR S&S® ENGINES FOR BIG TWINS

| S&S Engine Family | Year Group | Bore Size | Part # |
|---|---|---|---|
| P Series/SH-Series | 1966–'84 | 3⅝" | **90-9501** |
| P Series/SH-Series | 1966–'84 | 3½" | **90-9500** |

### CYLINDER HEAD GASKET KITS FOR S&S® ENGINES FOR BIG TWINS

| S&S Engine Family | Year Group | Bore Size | Part # |
|---|---|---|---|
| P Series/SH-Series | 1966–'84 | 3⅝" | **90-1918** |
| P Series/SH-Series | 1966–'84 | 3½" | **90-1917** |

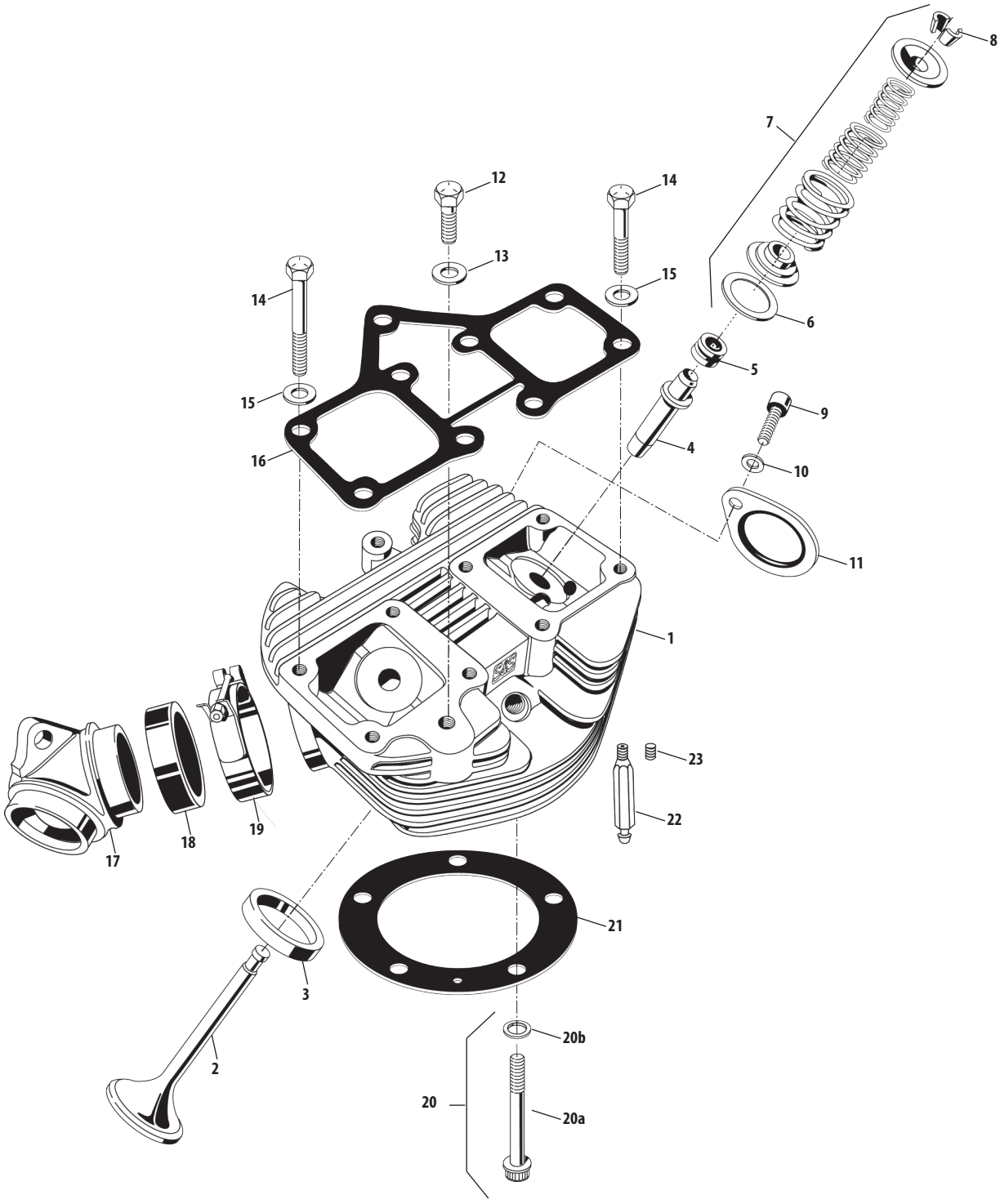


*All reference to HD® part numbers is for identification purposes only. We in no way are implying that any of S&S Cycle's products are original equipment parts or that they are equivalent to the corresponding HD® part number shown.*

# CYLINDER HEAD REPLACEMENT PARTS

## FOR P-SERIES ENGINES, PANHEAD CYLINDER HEAD AND VALVE TRAIN UPDATE KIT & SHOVELHEAD RETRO CONVERSION KIT

**1.** Cylinder head–(See page 147)

**2.** Valves
Intake
1.950" *18075-80, 18075-81, 18078-80, 18078- 81, 18078-81* ..... **90-2015**
Exhaust–1948-'84 bt
1.720" *18086-80, 18086-81, 18089-80, 18089-81* ..... **90-2022**

**3.** Valve seats
Intake - 1.940"
Standard *18020-79, 18018-66, 18056-66B* ..... **90-2017**
+.002" oversize ..... **N/A**
Exhaust - 1.750"
Standard *18017-66, 18055-66B, 18010-79* ..... **90-2018**
+.010" oversize ..... **90-2121**

**4.** Valve guide - cast - 1980-'84 bt
Intake or Exhaust (see valve guide diameter chart)
Standard ..... **90-2240**
+.001" *18109-81A* ..... **90-2241**
+.002" *18108-81A, 90-2232* ..... **90-2242**
+.003" *18107-81A, 90-2233* ..... **90-2243**
+.004" *18106-81A, 90-2234* ..... **90-2244**
+.006" *18110-81A* ..... **90-2246**
+.060" ..... **90-2249**

**5.** Valve guide seal–intake or exhaust 1981-'84 bt *18000-81*
*4 pack* ..... **900-1005**

**6.** Valve spring shim - Late 1981-'84 bt
.005" x .765" x 1.500" *each* ..... **50-7121**
.015" x .765" x 1.500" *each* ..... **50-7122**
.025" x .765" x 1.500" *each* ..... **50-7123**

**7.** Valve spring kit–Late 1981-'84
(Includes springs, top & bottom collars, keepers shims)
.590" lift - steel top collars ..... **90-2063**

**8.** Valve spring keeper - Intake or exhaust 1936-'84 bt
*each* ..... **90-2037-S**
*8 pack* ..... **50-7165**

**9.** Top Collar, Steel, .590" ..... **90-2057**

**10.** Inner Spring, .590" ..... **90-2054**

**11.** Middle Spring, .590" ..... **90-2055**

**12.** Outer Spring, .590" ..... **90-2056**

**13.** Bottom Collar, Steel, .590" ..... **90-2062**

**14.** Screw, SHCS, 5⁄16-18 x ¾" Zinc *3275* ..... **50-0302-S**

**15.** Lock washer - 5⁄16" ..... **50-7032**

**16.** Exhaust pipe gasket - 1966-'84 bt *each* ..... **93-1004-S**

**17.** Intake manifold (See page 162)

**18.** Manifold seal–O-ring - 1955-'78 bt *27060-55*
*each* ..... **50-8046**
*10 pack* ..... **50-8132**

**19.** Manifold mounting clamp O-ring type heads
1955-'78 bt *27063-57* ..... **16-0230**

**20.** Head bolt assembly, stainless - 1948-'84 bt
*(Includes head bolt & washer) 6469HW 10 Pack* ..... **93-3024**
a. Head Bolt,12 pt,7⁄16-20 X 2-3⁄8" x 1" TD *1324-S*
*each* ..... **93-3024-S**
b. Head bolt washer - 1936-'84 bt, *each* ..... **93-3025**

**21.** Head Gaskets
Head, Gasket, Copper - 1966-84bt
**21a.** 3 7⁄16"& 3½" Bore
*each 16770-66B* ..... **93-1041**
*10 pack* ..... **93-1061**
Head Gasket Kit ..... **106-1095**
**21b.** 3⅝"Bore
*each* ..... **93-1042**
*10 pack* ..... **93-1062**
Head Gasket Kit ..... **106-1096**
Head Gasket, Composite - 1948-65 bt
**21c.** 3⅝" Bore
*each* ..... **93-1019**
Head Gasket, Copper - 1948-65 bt
**21d.** 3 7⁄16"& 3½" Bore
*each 16770-48* ..... **106-5933**
**21e.** 3⅝" Bore
*each* ..... **106-5937**
Head Gasket Kit ..... **106-5938**

**22.** Rocker arm support
Front intake/rear exhaust ..... **106-0928**
Rear intake/front exhaust ..... **106-0929**

**23.** Pin, ¼" diameter x ½" *each* ..... **50-8022**
*2 pack* ..... **50-8022-2**
*5 pack* ..... **50-8105**

**24.** Gasket, rocker cover 1948-'65 bt *each* ..... **900-0329**
*Set 117541-48* ..... **900-0339**

**25.** Screw, SHC #10-24 x ¾" *2674, 2675 each* ..... **106-0913**

**26.** Shaft, Rocker Arm, S&S P-Series ..... **106-0915**
*4 pack* ..... **106-0916**

**27.** Snap ring SHF-37 3⁄8" x .050" *each* ..... **106-0917**

**28.** Roller rocker arm
Set ..... **900-4320A**
Front exhaust/rear intake *17375-66A* ..... **900-4320FA**
Rear exhaust/front intake *17360-66A* ..... **900-4320RA**

**29.** Fitting, oil return, 1⁄8"-27 pipe *63533-65, 63533-41A* ..... **31-2019**

**30.** Plug, oil return, 1⁄8"-27 pipe *each* ..... **50-8331A**
*10 pack* ..... **50-1015**

**31.** Flat washer, .192" x 5⁄16" x .035"
*each* ..... **50-7009**

**Not Shown:**

**32.** Head mount bolt - 7⁄16"-14 x 11¼"
*each* ..... **50-0171**

**33.** Flat washer - 7⁄16" x 15⁄16" x 1⁄8" *6495HW* ..... **50-7064**

**34.** Cover, rocker arm, set, 1948-'65 bt *17500-48A* ..... **106-0919**

**35.** Screw,SHC,5/16-18 x 1",Zinc,ASTM A574-92
*3201WA, 2708* ..... **50-0101**

**N/A= No longer available**

*All reference to HD® part numbers is for identification purposes only. We in no way are implying that any of S&S Cycle's products are original equipment parts or that they are equivalent to the corresponding HD® part number shown.*

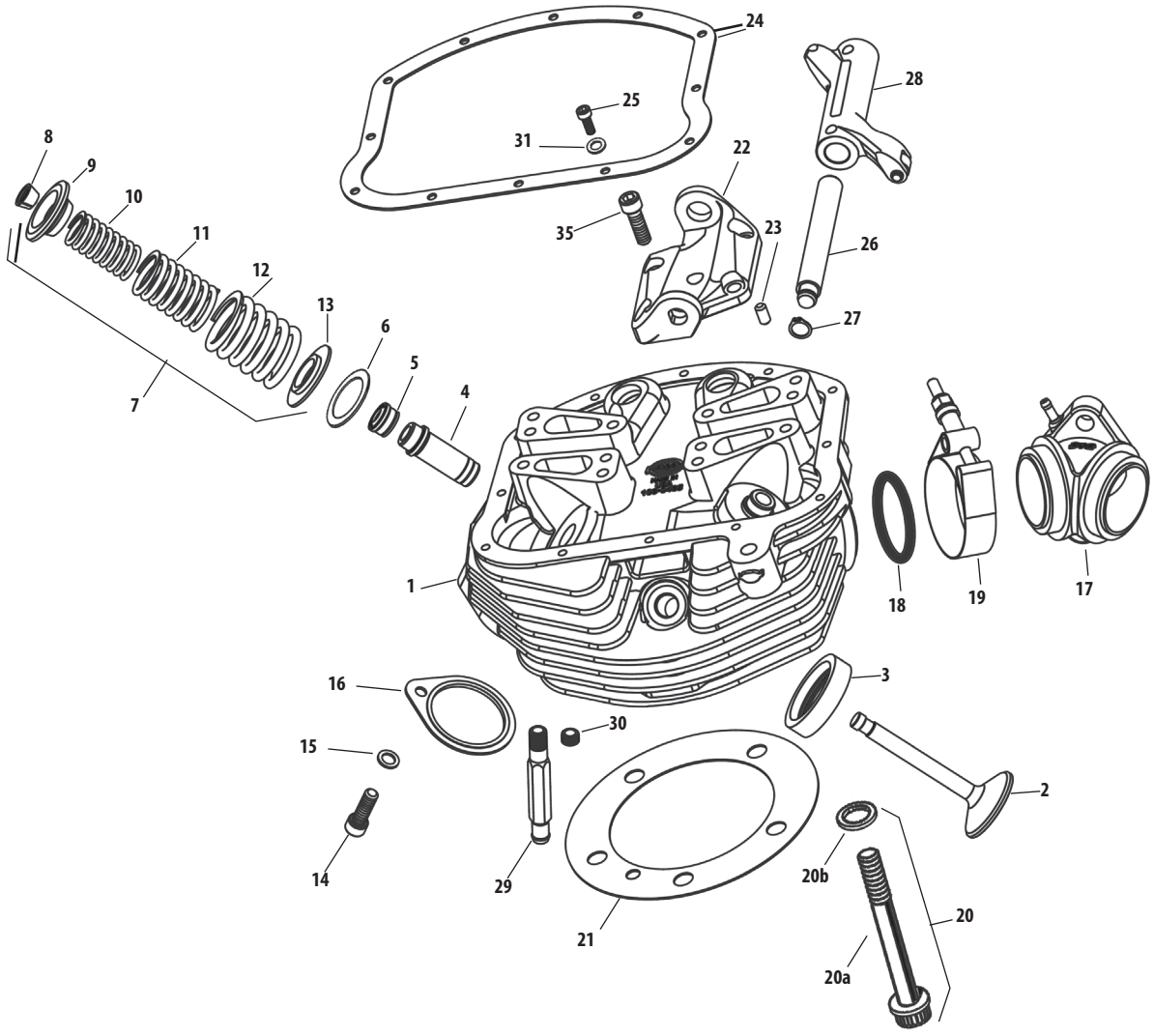


## TOP END REBUILD GASKET KITS FOR S&S® ENGINES

| S&S Engine Family | Year Group | Bore | Part # |
|---|---|---|---|
| P Series/SH-Series | 1966-'84 | 3⅝" | **90-9501** |
| P Series/SH-Series | 1966-'84 | 3½" | **90-9500** |

## VALVE GUIDE DIAMETERS FOR S&S® P AND SH SERIES ENGINES AND 1980–'84 BIG TWIN

| Oversize | Diameter | Part # |
|---|---|---|
| Std. | .6250/.6245 | **90-2240** |
| +.001 *18109-81A* | .6260/.6255 | **90-2241** |
| +.002 *18108-81A, 90-2232* | .6270/.6265 | **90-2242** |
| +.003 *18107-81A, 90-2233* | .6522/.6519 | **90-2243** |
| +.004 *18106-81A, 90-2234* | .6290/.6285 | **90-2244** |
| +.006 *18104-81A, 90-2236* | .6310/.6305 | **90-2246** |
| +.060 | .6850/.6845 | **90-2249** |

*All reference to HD® part numbers is for identification purposes only. We in no way are implying that any of S&S Cycle's products are original equipment parts or that they are equivalent to the corresponding HD® part number shown.*

# CYLINDER HEAD REPLACEMENT PARTS
## FOR 1936–'47 KNUCKLEHEADS AND KN-SERIES ENGINES

**1.** Head, kit, .421" dual steel
For covers, gloss black
1936-'47 OHV BT; KN-Series ..... **N/A**
**2.** Valve
Intake, 1.940" ..... **106-3630**
Exhaust, 1.750" ..... **106-3629**
**3.** Valve seat
Intake, 1.940" ..... **106-2821**
Intake/Exhaust, 1.750" ..... **106-2822**
**4.** Valve guide, intake/exhaust for Stock (see valve guide diameter chart)
Standard *18185-40, 18181-36* ..... **106-3637**
+.002" ..... **106-3948**
+.004" ..... **106-3638**
+.008" ..... **106-3639**
Valve guide, intake/exhaust for S&S KN-Series
Standard ..... **900-0526**
+.002" ..... **900-0527**
+.004" ..... **900-0528**
+.008" ..... **900-0529**
**5.** Gasket, lower valve cover (tin), 1936-'47 OHV BT ..... **900-0668**
**6.** Cover, kit, bottom, valve spring, (tins), black anodized,
(includes screws) 1938-'47 BT KN-Series ..... **900-0674**
NOTE - bottom tins will not fit stock upper tins.
**7.** Screw, valve spring cover *3477* ..... **106-3634**
***NOTE - Valve spring components below are not interchangable with stock and must be used together.***
**8.** Bottom collar, valve spring ..... **900-0670**
**9.** Shim, valve spring .015" ..... **106-4549**
**10.** Spring, kit, valve, dual, .421" ..... **106-4362**
Springs only,1936-'47 OHV BT ..... **900-0535**
**11.** Top collar, valve spring ..... **106-3828**
**12.** Keepers, valve spring, top collar ..... **90-2037-S**
*8 Pack* ..... **50-7165**
**13.** Cover, kit, top, valve spring, (tins) 1938-'47 BT; KN-Series
Chrome ..... **106-2400±**
Gloss Black Powder coat ..... **106-2893**
NOTE - top tins will not fit stock bottom tins.
**14.** Gasket, kit, valve spring cover, top, S&S only ..... **106-3166**
**15.** Nut, rocker shaft, with o-ring, chrome 1936-'47 OHV BT
*17447-36 each* ..... **106-4355±**
**16.** O-ring,(-017),.676" ID x .816" OD,Black, ..... **50-0466**
**17.** Housing, rocker arm, (knuckles) ,1936-'47 OHV BT
Set, Polished ..... **900-0617**
Front, Polished ..... **900-0618**
Rear, Polished ..... **900-0619**
Set, As Cast ..... **900-0622**
Front, As Cast ..... **900-0623**
Rear, As Cast ..... **900-0624**
**18.** Screw, HHCS, ⅜-16 x 1"– Cadmium plated ..... **106-4597**
**19.** Screw, HHCS, ⅜-16 x 1½"– Cadmium plated ..... **106-4598**
**20.** Washer, Lock, 7/16", Zinc ..... **106-4357**
**21.** Washer, packing 1936-'47 OHV BT *17482-36* ..... **106-4358**
**22.** Seal, rocker arm, 1936-'47 OHV BT *17475-38* ..... **106-3636**
**23.** Rocker arm, non-roller, 1:1 ratio, 1936-'47 OHV BT; KN-Series
(Includes shaft kit) Set of four ..... **106-2412**
Front Intake w/shaft ..... **106-2862**
Front Exhaust w/shaft ..... **106-2863**
Rear Intake w/shaft ..... **106-2864**
Rear Exhaust w/shaft ..... **106-2865**
**24.** Shaft, set, rocker arm, 1936-'47 OHV BT; KN Series
(Set of four, Includes spacers and hardware) ..... **106-2413**
**25.** Nut kit, rocker arm *7831* ..... **106-3632**
**26.** Adaptor, Manifold, conversion, plumber to o-ring ..... **106-4654**
**27.** O-ring, manifold *27060-55 each* ..... **50-8046**
*10 pack* ..... **50-8132**
**28.** Gasket, set, head, KN-Series, Copper
3 5/8" bore *(each)* ..... **106-2681**
*2 pack* ..... **106-2432**
3 7/16" bore ..... **106-2689**
**29.** Oil line, Return 1936-'47 OHV BT *(S&S Tins Only)*
Kit of 4 ..... **106-4446**
Front Intake ..... **106-4447**
Front Exhaust ..... **106-4448**
Rear Intake ..... **106-4449**
Rear Exhaust ..... **106-4450**
**30.** Seal, Oil Return Line, FHP tins only
28" OD x .18" ID x 1", Rubber Hose ..... **106-4456**
**31.** O-ring ..... **900-0669**
**32.** Oil supply fitting, Cad Plated *17325-42* ..... **106-4618**
**33.** Oil return fittings, Parkerized *17320-38* ..... **106-4619**
**34.** Washer, Lock, .385" x .680" x .094",Zinc ..... **50-7052**
**35.** Nut, Jam, 7/16-20, Zinc ..... **106-4356**
**36.** Washer, Thrust, Stepped,.015" *17465-36* ..... **106-4352**
**37.** Washer, Thrust, Stepped, .060" ..... **106-4883**

**Parts Not Shown:**

**38.** Manifold, kit, o-ring, 1⅞", VOES, KN93 ..... **106-4530**
**39.** Gasket, kit, engine, KN-Series, with hardware ..... **106-2414**
**40.** Pushrod, set, non-adjustable, KN93, steel
1936-'47 OHV BT ..... **930-0009**
**41.** Cover keeper, kit, pushrod,
KN93 *17949-40, 17950-66* ..... **93-4106**
**42.** Oil line, supply, "Y" feed, 1936-'47 OHV BT
Stock 74", KN74, KN93, S&S/Stock Carb ..... **106-4670**
**43.** Bottom collar spacer–required when using S&S valve springs
with stock steel "tins" ..... **106-5094**
**44.** Rocker arm cover gasket kit, 1936-'47 big twin ..... **900-0493**

*All reference to HD® part numbers is for identification purposes only. We in no way are implying that any of S&S Cycle's products are original equipment parts or that they are equivalent to the corresponding HD® part number shown.*

± WARNING: Cancer and Reproductive Harm–www.P65Warnings.ca.gov

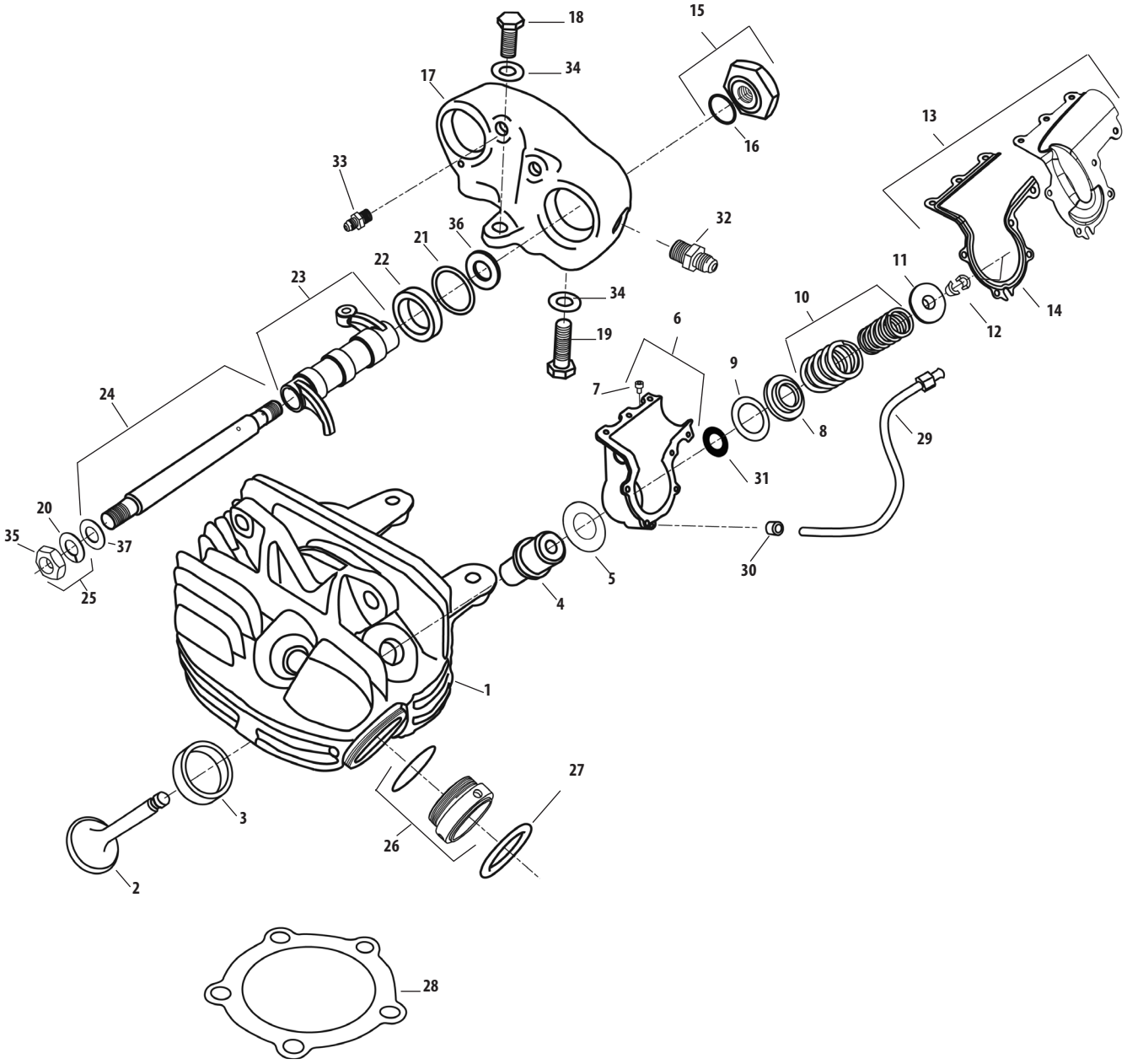


**VALVE GUIDE DIAMETERS FOR S&S KN SERIES ENGINES AND 1936–'47 OHV BIG TWIN**

| Oversize | Diameter | Part # |
|---|---|---|
| Std. | .6442/.6439 | **900-0526** |
| +.002 | .6462/.6459 | **900-0527** |
| +.004 | .6482/.6479 | **900-0528** |
| +.008 | .6522/.6519 | **900-0529** |

# BILLET ROCKER COVER REPLACEMENT PARTS
## FOR 1966–'84 BIG TWIN ENGINES

**1.** Rocker cover, assembly front ..... **N/A**
**2.** Rocker cover, assembly rear ..... **N/A**
**3.** Screw, SHS ..... **50-0294-S**
**4.** Nut, HFH 5⁄16" UNC ..... **50-8187-S**
**5.** Screw, SHS ..... **50-0318-S**
**6.** O-ring, Viton® -019 each ..... **50-7962-S**
**7.** O-ring, Viton 1.00 mm CS x 14.00mm ..... **50-7963-S**
**8.** O-ring, front, Viton 1.00mm CS x 9.50mm ID ..... **50-7965-S**
O-ring, rear, Viton 1.00mm CS x 11.00mm ID
*10 pack* ..... **50-7966**
**9.** O-ring, Viton -160 ..... **50-7961-S**
**10.** Rocker shaft set (For S&S rocker covers only.)
Set ..... **90-4351**
Individual ..... **90-4350**
**11.** Plug, rocker arm shaft *(4 pack)* ..... **50-8340**
**12.** Roller Rocker arm 1966-'84 big twin
Set ..... **900-4320A**
Front *17375-66A* ..... **900-4320FA**
Rear *17360-66A* ..... **900-4320RA**
**13.** Dowel pin,.187" x .635",Steel ..... **50-8031**
*10 pack* ..... **50-1015**
**14.** Gasket kit, S&S billet rocker covers (Not Shown) ..... **90-4311**
**15.** Plug, SH pipe - 1⁄8-27 ..... **50-8331A**
*10 pack* ..... **50-1015**

### ROCKER SHAFT AND OIL LINE SEALS
**Rocker Shaft Seal**

S&S SH-Series and 1966-'84 bt with stock rocker covers (N/S) ... **50-8073-S**

Oil Line Seal—S&S SH-Series and 1966-'84 bt using outside oil lines (N/S)
..... **50-8074-S**

### (N/S) = Not Shown

***NOTE:*** Since top cover and base are machined together, replacements are only sold as assemblies to prevent mismatch of polished surfaces.

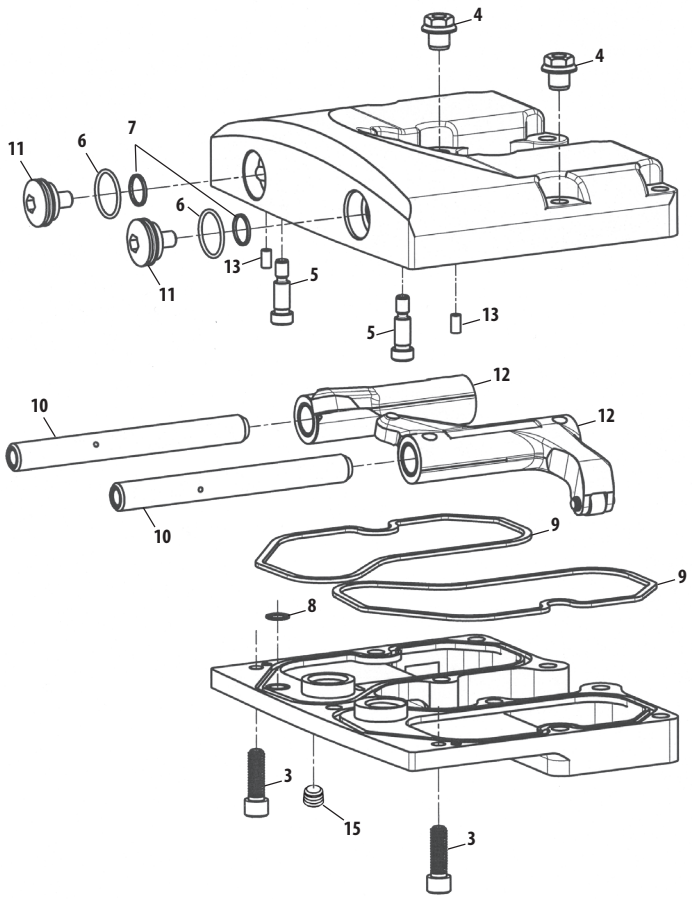




*All reference to HD® part numbers is for identification purposes only. We in no way are implying that any of S&S Cycle's products are original equipment parts or that they are equivalent to the corresponding HD® part number shown.*

# SUPER B CARBURETOR
## REPLACEMENT PARTS

**1.** Throttle return spring ..... **11-2082**
**2.** Throttle plate screw
*11-2045 each* ..... **50-0055-S**
*10 pack* ..... **50-0064**
**3.** Throttle shaft
Comes with two throttle plate screws ..... **11-2083**
**4.** Throttle shaft bushing
(For repair only) ..... **11-2134**
**5.** Enrichment device ..... **11-2084±**
**6.** Carb body ..... **11-2081±**
**7.** Idle mixture screw *each* ..... **11-2354**
*5 pack* ..... **11-2378**
**8.** Idle mixture screw spring *each* ..... **11-2052**
*10 Pack* ..... **11-2060**
**9.** O-ring–1⅞" *16-0056* ..... **50-8013**
**10.** Throttle plate–1⅞" ..... **11-2055**
**11.** Throttle arm assemble two cable type
*(includes #25,26,27,28)* ..... **11-2148**
**12.** Intermediate jet–See chart on page 167
**13.** Main discharge tube ..... **11-2085±**
**14.** Main jet–See chart See chart on page 168
**15.** Bowl gasket each ..... **11-2086**
*10 pack* ..... **11-2091**
**16.** Float
Wire type ..... **11-2187**
Forked type ..... **N/A**
**17.** Float retaining pin ..... **11-2069**
**18.** Bowl
For wire type float ..... **11-2188**
For forked type float ..... **N/A**
**19.** Needle
For wire type float ..... **11-2195±**
For forked type ..... **11-2095**
**20.** Seat–For wire or forked type float ..... **11-2065**
**21.** Bowl plug *each* ..... **11-2090**
*5 pack* ..... **11-2092±**
**22.** Bowl screw *each* ..... **50-0034**
*10 Pack* ..... **50-0063**
**23.** Spacer, Kit, Carb, 1-⅞" x 1" ..... **16-0057***
Spacer, Kit, Carb, 2-1⁄16" x 1" ..... **16-0357***
Spacer, Kit, Carb, 2-¼" x 1" ..... **16-0157***
**24.** Screw,
1" x ⅜"-16 ..... **50-0161**
1¼" x ⅜"-16 ..... **50-0162**
*10 pack* ..... **50-0177**
1⅜" x ⅜"-16 ..... **50-0163**
*5 pack* ..... **50-0178**
2" x ⅜"-16 ..... **50-0164**
*5 pack* ..... **50-0185**
**25.** Spring,Idle/Accelerator Pump,Super B/D/E ..... **11-2048**
**26.** Screw,SLTD FH,8-32 x ⅞",Zinc,Steel ..... **50-0038**
*10 pack* ..... **50-0150**
**27.** Screw, SLTD FH, 8-32 x ⅝", Zinc, Steel ..... **50-0039**
*10 pack* ..... **50-0146**
**28.** Screw,SLTD FH,8-32 x 5⁄16",Zinc,Steel ..... **50-0030-S**
**29.** Tube Fast Idle Pickup .125" x 2.350" ..... **0381F**

### CARBURETOR REBUILD KITS

**Master Rebuild Kit**
Super B
*(includes #1, 2, 3, 4, 7, 8, 9, 10, 15, 17, 19 ,20, 22, 25, 26, 27, & 28)* ..... **11-2914±**

**Body Rebuild Kit**
Super A/B
..... **11-2903±**

### CARBURETOR KIT

| | |
|---|---|
| Fully-assembled carburetor | **11-0111** |

DISCLAIMER: NOT LEGAL FOR SALE OR USE IN CALIFORNIA ON ANY POLLUTION CONTROLLED MOTOR VEHICLE. NOT LEGAL FOR SALE OR USE NATIONWIDE ON ANY FEDERAL POLLUTION CONTROLLED MOTOR VEHICLE UNDER THE CLEAN AIR ACT

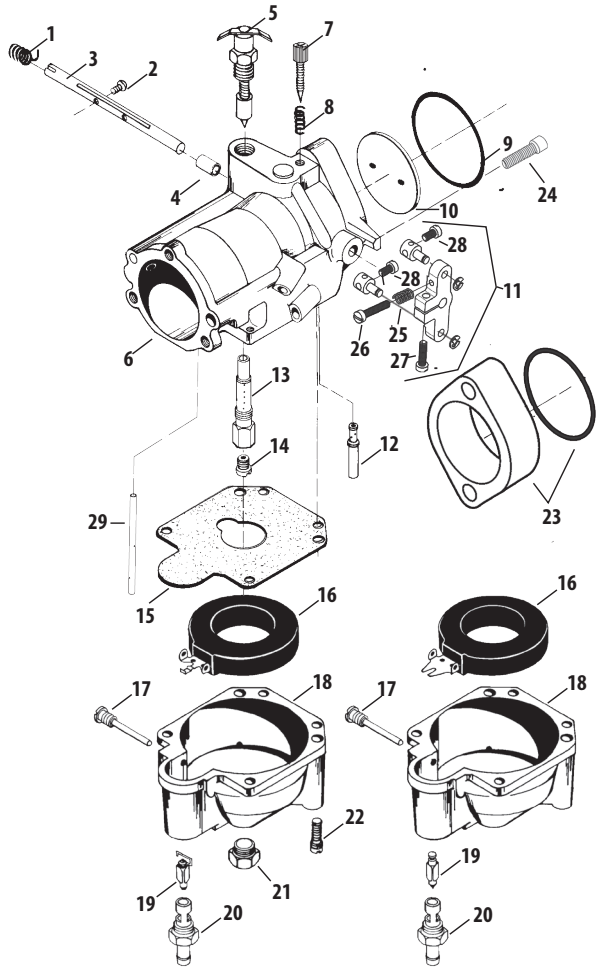


Early Series #94 gas jets were stamped with single digit numbers. Conversions for these numbers are:

| | | | |
|---|---|---|---|
| 1 | .025" | 4 | .033" |
| 2 | .028" | 5 | .036" |
| 3 | .031" | 6 | .040" |

± ⚠ WARNING: Cancer and Reproductive Harm–www.P65Warnings.ca.gov

# SUPER E & G CARBURETOR REPLACEMENT PARTS

**1.** Carb body assembly
1⅞" Super E ..... **11-2381±**
2⅛" Super G ..... **11-2391±**
**2.** Throttle shaft
1⅞" Super E–Includes two plate screws ..... **11-2383**
2⅛" Super G–Includes two plate screws ..... **11-2483**
**3.** Throttle plate screw *11-2045- (two required) (each)* ..... **50-0055-S**
*10 pack* ..... **50-0064**
**4.** Throttle plate
1⅞" Super E ..... **11-2055**
2⅛" Super G ..... **11-2355**
**5.** Throttle return spring *(each)* ..... **11-2382**
*5 Pack* ..... **11-3502**
**6.** Throttle spool ..... **11-2385**
**7.** Throttle shaft lock washer *(two required)* ..... **50-7031**
**8.** Throttle shaft nut *(two required) (each)* ..... **11-2350**
*5 pack* ..... **11-2363**
**9.** Throttle shaft nylon washer *(each)* ..... **50-7050**
*10 pack* ..... **50-7072**
**10.** Pump actuator lever ..... **11-2376**
**11.** Actuator spring *(each)* ..... **11-2375-S**
*5 pack* ..... **11-3501**
**12.** Pump actuator arm ..... **11-2377**
**13.** Idle mixture screw
**a.** Idle mixture screw, brass *(each)* ..... **11-2354±**
*5 pack* ..... **11-2378±**
**b.** Idle mixture screw only
*each* ..... **110-0003**
Idle mixture screw w/ 500-0036 o-ring)
*each* ..... **110-0068±**
*5 pack* ..... **110-0069±**
**14.** Idle mixture screw spring *(each)* ..... **11-2052**
*10 Pack* ..... **11-2060**
**15.** Idle speed screw *(each)* ..... **50-0038**
*10 Pack* ..... **50-0150**
**16.** Pump adjustment screw *(each)* ..... **50-0039**
*10 Pack* ..... **50-0146**
**17.** Idle speed/pump adjuster spring *(each)* ..... **11-2048**
*10 pack* ..... **11-2053**
**18.** Plunger nut *(each)* ..... **11-2344±**
*5 Pack* ..... **11-2372±**
**19.** Plunger spring *(each)* ..... **11-2340**
*10 Pack* ..... **11-2359**
**20.** Fast idle plunger ..... **11-2343**
**21.** Cable guide assembly with screw
Use with butterfly style cables ..... **11-2339P**
Use with constant velocity style cables ..... **11-2338P**
**22.** Cable clamp/float pin screw *(each)* ..... **50-0041**
*10 Pack* ..... **50-0062**
**23.** O-ring
1⅞" Super E *(each)* ..... **50-8016**
*10 Pack* ..... **50-8094**
2⅛" Super G *(each)* ..... **50-8015**
*10 pack* ..... **50-8093**
**24.** Bellows seal *(each)* ..... **11-2266**
*5 Pack* ..... **11-2279**
**25.** Bowl vent plug *(each)* ..... **50-0105**
*10 pack* ..... **50-0151**
**26.** Main discharge tube ..... **11-2085±**
**27.** Main jet–See Chart on page 168
**28.** Intermediate Jets–See Chart on page 167
Series #94 fits all Super 1⅞", 2⅛", 2¼" gas carburetors.
**29.** Bowl gasket *(each)* ..... **11-2386**
*10 pack* ..... **11-2387**
**30.** Float ..... **11-2187**
**31.** Float pin *(each)* ..... **11-2369±**
*5 Pack* ..... **11-2370±**
**32.** Bowl screw
10-24 x ¾" - *Three required (each)* ..... **50-0034**
*10 Pack* ..... **50-0063**
10-24 x 2⅜" - *One required (each)* ..... **50-0040**
*10 Pack* ..... **50-0061**
**33.** Carb bowl *(only)* ..... **11-2388**
Carb bowl complete assembly ..... **11-2388P**
**34.** Bowl plug *(each)* ..... **11-2090**
*5 pack* ..... **11-2092±**
**35.** Seat o-ring**(required with part #11-2465 only when replaces 360° style fuel inlet.)*
*each* ..... **50-8009**
*10 pack* ..... **50-8095**
**36.** Needle
1⅞" Super E & 2⅛" Super G ..... **11-2195±**
Racing only ..... **11-2197±**
**37.** Seat - Includes O-ring #35
*(Replaces obsolete seats 11-2347 and 11-2348)*
**a.** 1⅞" E & 2⅛" G *(Uses part #11-2195± needle)* ..... **11-2465**
**b.** Racing only *(Uses part #11-2197± needle)* ..... **N/A**
**c.** Racing only -threaded fuel inlet (6AN .157" ID)
*(Uses part #11-2195± needle)* ..... **11-2395**
**d.** Permeation Compliant fuel inlet seat Super E or G.
*(Uses part #11-2195± needle)* ..... **106-2011**
**38.** Ejector nozzle o-ring *(each)* ..... **50-8011**
*10 Pack* ..... **50-8096**
**39.** Pump pushrod *(each)* ..... **11-2373**
*5 Pack* ..... **11-2393**
**40.** Check ball - *(two required) (each)* ..... **50-8090**
*10 pack* ..... **50-8125**
**41.** Check ball spring *(each)* ..... **11-2374**
*5 Pack* ..... **11-2392**
**42.** Pump cap o-ring - *(two required) (each)* ..... **50-8012**
*10 Pack* ..... **50-8100**
**43.** Pump cap assembly ..... **11-2389**
**44.** Overflow hose per 24" ***27369-76** (each)* ..... **19-0262-S**
*5 Pack* ..... **19-0263**
**45.** Pump cap screw 8-32 - *(two required) (each)* ..... **50-0042**
*10 Pack* ..... **50-0098**
**46.** Diaphram spring *(each)* ..... **11-2275**
*10 pack* ..... **11-2278**
**47.** Diaphragm ..... **11-2282**
**48.** Gasket, backplate *(each)* ..... **106-1724**
*10 pack* ..... **106-2328**
**49.** Enrichment device *(Use with air horn only)* ..... **11-2084**
**50.** Fuel line
**a.** Fuel line with 90° bend 19"*(Use with part #11-2465
USA USA 1,2,3 ..... **190-0006**
**b.** Permeation Compliant straight, 311" x .563" x 17.5"
*(Use with part #106-2011, 90° seat)* ..... **190-0001**
**51.** Fuel line insulator–12" USA 1,2,3 ..... **19-0172**
**52.** Spacer, Kit, w/ O-ring
1⅞" x 1" ..... **16-0057***
2⅛" x 1" ..... **16-0357***
2¼" x 1" ..... **16-0157***
*Use with 1" Spacer Block ..... **16-0058**
**53.** Insulator Block,Manifold,w/ O-ring
1⅞" x ¼" Super E ..... **16-0491**
1⅞" x ⅜" Super E ..... **16-0497**
2⅛" x ¼" Super G ..... **16-0492**
2⅛" x ⅜" Super G ..... **16-0498**
2¼" x ¼" Super D ..... **16-0499**
**54.** Screw
1" x ⅜"-16 *(each)* ..... **50-0161**
1¼" x ⅜"-16 *(each)* ..... **50-0162**

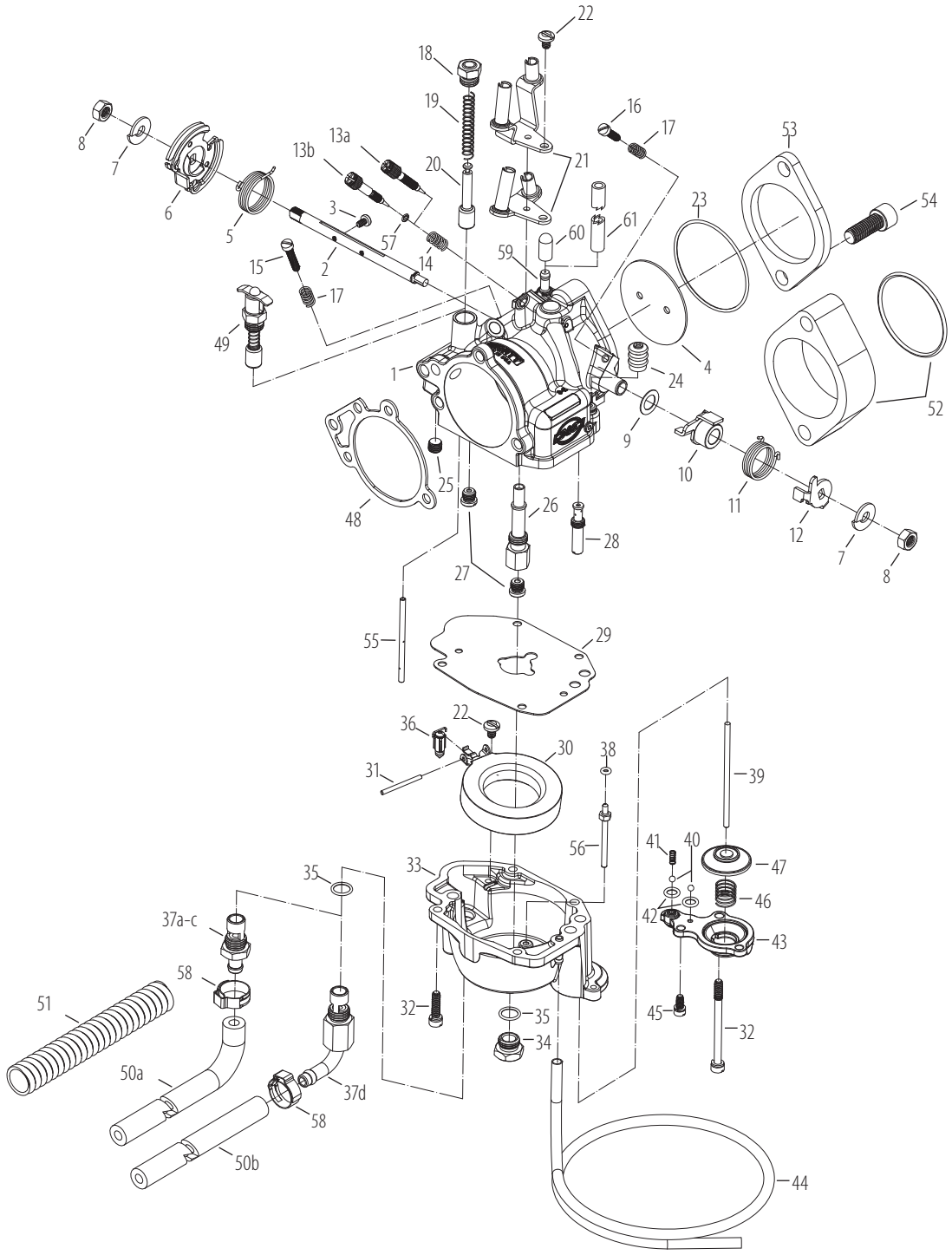


*10 pack* ..... **50-0177**
1⅜" x ⅜"-16 *(each)* ..... **50-0163**
*5 pack* ..... **50-0178**
2" x ⅜"-16 *(each)* ..... **50-0164**
*5 pack* ..... **50-0185**

**55.** Tube,Fast Idle Pick-Up,Super E/G,.125" x 2.350",Brass ..... **0381F**±
**56.** Tube,Ejector Nozzle,Super E/G,Flared,Brass ..... **106-6124**±
**57.** O-ring, 3mm x 5mm x 1mm *(each)* ..... **500-0036**
*10 pack* ..... **500-0148**
**58.** Clamp, ⅝" - ⅞" ..... **50-8002**
**59.** Hose, Fitting straight, .040" ..... **16-0134**
**60.** VOES Fitting Cap ..... **50-8372**
**61.** VOES/Oil Return Hose ..... **19-0395**

**CARBURETOR REBUILD KITS: SEE PAGE 168**

± ⚠ WARNING: Cancer and Reproductive Harm–www.P65Warnings.ca.gov

# L-SERIES MGL & MGAL GAS CARBURETOR
## REPLACEMENT PARTS

**1.** Carb body assembly - MGL & MGAL 1⅞" ..... **N/A**
**2.** Throttle shaft *(includes 2 ea. #50-0055-S)* ..... **11-2083**
**3.** Choke/throttle plate screw ..... **50-0055-S**
*10 pack* ..... **50-0064**
**4.** Throttle plate -1⅞" ..... **11-2055**
**5.** Throttle return spring ..... **11-2082**
**6.** Throttle arm assembly, 1 cable ..... **N/A**
**7.** Intermediate plug ..... **N/A**
**9.** Choke lever washer ..... **N/A**
**13.** Idle mixture screw ..... **11-2354**
*5 pack* ..... **11-2378**
**14.** Idle mixture screw spring ..... **11-2052**
*10 pack* ..... **11-2060**
**18.** Choke lever screw ..... **N/A**
**19.** Choke lever spring ..... **N/A**
**20.** Choke plate ..... **N/A**
**23.** O-ring - 1 ⅞" ..... **50-8013**
**26.** Main discharge tube ..... **N/A**
**27.** Main jet - state size - see page 168
**28.** Intermediate jet ..... **N/A**
**29.** Bowl gasket ..... **11-2070**
**30.** Float - forked type or original brass type ..... **N/A**
**31.** Float retaining pin ..... **11-2069**
**32.** Bowl screw - 10-24 x ¾" ..... **50-0032**
**33.** Carb bowl assembly
Original type ..... **N/A**
Forked type ..... **N/A**
**34.** Bottom plug ..... **N/A**
**36.** Needle - forked type ..... **11-2095**
**37.** Seat - forked/wire type ..... **11-2065**
**51.** Choke shaft assembly ..... **N/A**
**52.** Throttle shaft bushing - for repair only ..... **11-2134**
**54.** Lockwasher - #10 ..... **50-7000**
**55.** Intermediate air bleed ..... **N/A**
**56.** Spring, Idle/Accelerator Pump, Super B/D/E/G, .032" Wire, .213" x .245" x .506", Stainless Steel ..... **11-2048**
*10 pack* ..... **11-2053**
**57**. Screw, SLTD FH, 8-32 x 7/8", Zinc, Steel ..... **50-0038**
*10 pack* ..... **50-0150**
**58.** Screw, SLTD FH, 8-32 x 5/8", Zinc, Steel ..... **50-0039**
*10 pack* ..... **50-0146**
**59.** Screw, SLTD FH, 8-32 x 5/16", Zinc, Steel ..... **50-0030-S**

**CARBURETOR REBUILD KITS**

**Body Rebuild Kit**
**MGL** *(includes:#2,3,4,5,23,29,52)* ..... **11-2906±**
**MGAL** *(includes:#2,3,4,5,23,29,52)* ..... **11-2900±**

**Master Rebuild Kit**
**MGL** *(includes#2,3,4,5,13,14,23,29,31,36,37,52,56)* ..... **11-2913±**
**MGAL** *(includes#2,3,4,5,13,14,23,29,31,32,52,53,54,56,57,58,59)* ..... **11-2911±**

**N/A = NO LONGER AVAILABLE**
**N/S = NOT SHOWN**

***NOTE:*** When ordering parts, please supply the carb serial number. To order a manifold or air cleaner assembly or any related parts, refer to the Manifold or Air Cleaner sections of this catalog.

± ⚠ WARNING: Cancer and Reproductive Harm–www.P65Warnings.ca.gov

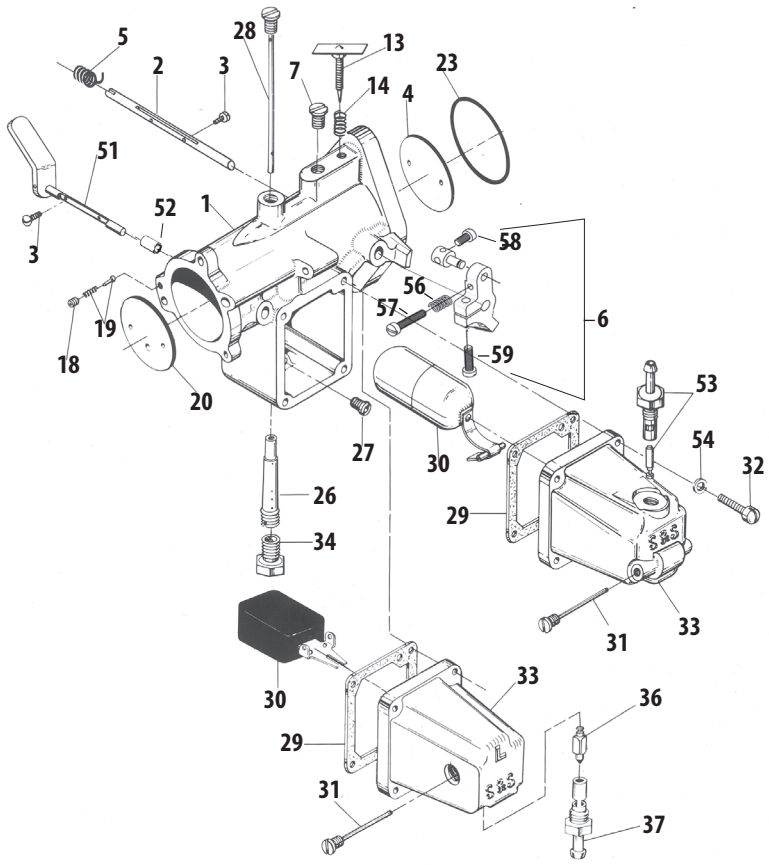


***L-Series MGAL Gas Carburetor***
Years Produced: *1977 to 1978*
Size Produced: *1⅞" throat*
Identification Markings: *Serial number stamped on body below "S&S Cycle" - "MGAL" cast on body above "S&S Cycle"*
Distinguishing Characteristics: *Built-in choke mechanism–intermediate jet goes through venturi from top of carb down into main discharge tube. Side mounted float bowl–bowl vent/throttle cable housing boss cast on body above float bowl. Air cleaner mounting pattern same as stock Tillotson, Bendix, Keihin butterfly type carbs.*

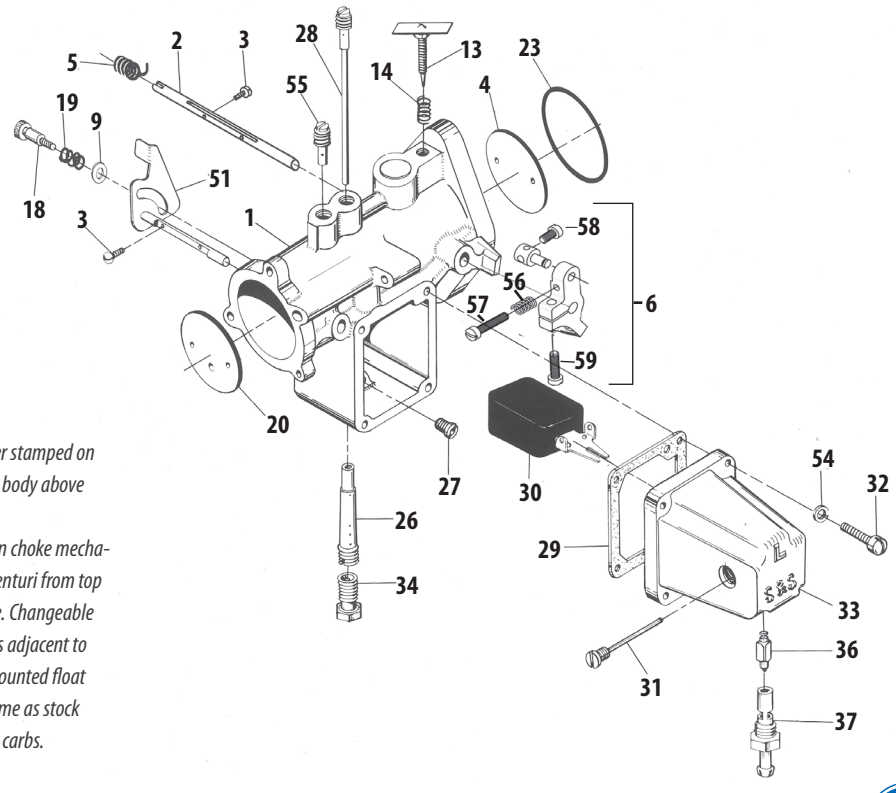


***L-Series MGL Gas Carburetor***
Years Produced: *1980 to 1981*
Size Produced: *1⅞" throat*
Identification Markings: *Serial number stamped on body below "S&S Cycle" - "MG" cast on body above "S&S Cycle"*
Distinguishing Characteristics: *Built-in choke mechanism. Intermediate jet goes through venturi from top of carb down into main discharge tube. Changeable intermediate air bleed screws into boss adjacent to intermediate jet on top of carb. Side mounted float bowl. Air cleaner mounting pattern same as stock Tillotson, Bendix, Keihin butterfly type carbs.*

# L-SERIES GAL & GBL GAS CARBURETOR

## REPLACEMENT PARTS

**1.** Carb body assembly - GAL 1⅞" or GBL 1¾" ..... **N/A**
**2.** Throttle shaft (includes 2 ea. #11-2045) ..... **11-2083**
**3.** Choke/throttle plate screw ..... **50-0055-S**
*10 pack* ..... **50-0064**
**4.** Throttle plate
1⅞" (GAL) ..... **11-2055**
1¾" (GBL) ..... **11-2023**
**5.** Throttle shaft bushing - for repair only ..... **11-2134**
**6.** Throttle arm assembly, 1 cable, reversible ..... **N/A**
**7.** Intermediate plug ..... **N/A**
**13.** Idie mixture screw ..... **11-2354**
*5 pack* ..... **11-2378**
**14.** Idle mixture screw spring ..... **11-2052**
*10 pack* ..... **11-2060**
**18.** Choke detent screw ..... **N/A**
**19.** Choke detent pin & spring ..... **N/A**
**20.** Choke plate ..... **N/A**
**23.** O-ring - 1⅞" ..... **50-8013**
**26.** Main discharge tube ..... **N/A**
**27.** Main jet - state size - seepage 168
**28.** Intermediate jet ..... **N/A**
**29.** Bowl gasket ..... **11-2070**
**30.** Float - forked type or original brass type ..... **N/A**
**31.** Float retaining pin ..... **11-2069**
**32.** Bowl screw - 10-24 x ¾" ..... **50-0032**
**33.** Carb bowl assembly
Original type ..... **N/A**
Forked type ..... **N/A**
**34.** Bottom plug ..... **N/A**
**36.** Needle - forked type ..... **11-2095**
**37.** Seat - forked/wire type ..... **11-2065**
**51.** Choke shaft assembly ..... **N/A**

**54.** Lock washer - #10 ..... **50-7000**
**55.** Spring, Idle/Accelerator Pump, Super B/D/E/G, .032" Wire, .213" x .245" x .506", Stainless Steel ..... **11-2048**
*10 pack* ..... **11-2053**
**56.** Screw, SLTD FH, 8-32 x 7/8", Zinc, Steel ..... **50-0038**
*10 pack* ..... **50-0150**
**57.** Screw, SLTD FH, 8-32 x 5/8", Zinc, Steel ..... **50-0039**
*10 pack* ..... **50-0146**
**58.** Screw, SLTD FH, 8-32 x 5/16", Zinc, Steel ..... **50-0030-S**

### *CARBURETOR REBUILD KITS*

Body Rebuild Kit
GAL1⅞" *(includes: #2,3,4,5,23,29,52)* ..... **11-2900**±

Master Rebuild Kit
GAL 1⅞"
*(includes #3,4,13,14,23,29,31,32,52,53,54,55,56,57,58)* .... **11-2911**±

GBL 1¾" *(includes #3,4,13,14,23,29,31,32,52,53,54,55,56,57,58)* .... **11-2912**±

N/A = NO LONGER AVAILABLE
N/S = NOT SHOWN

±⚠ WARNING: Cancer and Reproductive Harm–www.P65Warnings.ca.gov

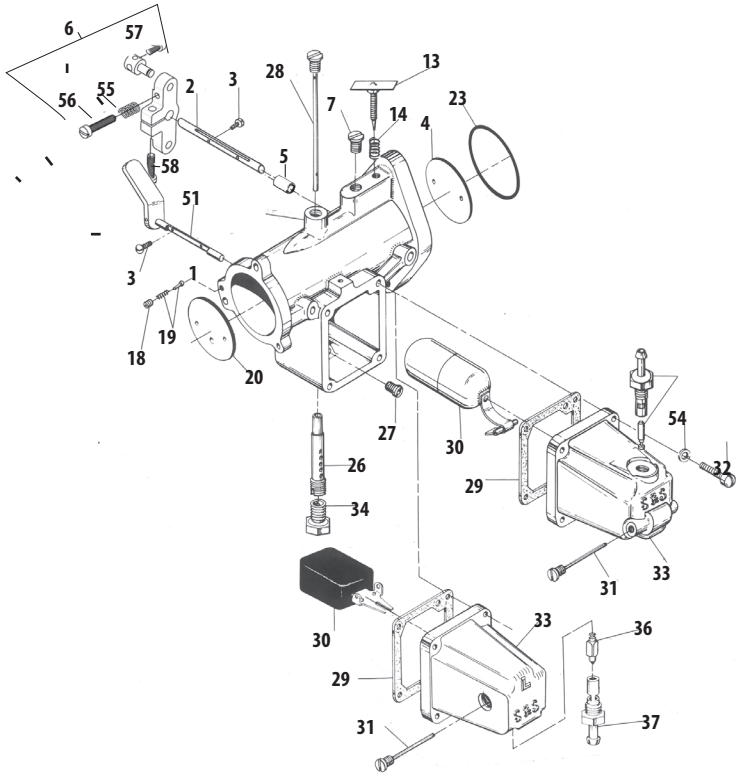


***L-Series GAL & GBL Gas Carburetors***
Years Produced: *1972 to 1975*
Sizes Produced: *1¾" and 1⅞" throats*
Identification Markings: *serial number stamped on body below "S&S Cycle"–"GAL" means gas type with 1⅞" throat, late style - "GBL" means gas with 1¾" throat, late style*
Distinguishing Characteristics: *Built-in choke mechanism. Intermediate jet goes through venturi from top of carb down into main discharge tube. Side mounted float bowl. Air cleaner mounting pattern same as stock Tillotson, Bendix, Keihin butterfly type carbs*

***NOTE:*** When ordering parts, please supply the carb serial number. To order a manifold or air cleaner assembly or any related parts, refer to the Manifold or Air Cleaner sections of this catalog.

# EARLY STYLE GAS & FUEL CARBURETOR
## REPLACEMENT PARTS

| | | |
|---|---|---|
| **1.** | Carb body assembly - F, FA 1 ⅞", FB 1 ¾" fuel & G, GA 1 ⅞", GB 1 ¾" gas | **N/A** |
| **2.** | Throttle shaft (includes 2 ea. #11-2045) | |
| | Gas | **11-2083** |
| | Fuel | **11-2184** |
| **3.** | Throttle plate screw | **50-0055-S** |
| | *10 pack* | **50-0064** |
| **4.** | Throttle plate | |
| | 1¾" gas & fuel | **11-2023** |
| | 1⅞" gas | **11-2055** |
| **6.** | Throttle arm assembly, 1 cable reversible | **N/A** |
| **7.** | Intermediate plug | **N/A** |
| **10.** | Intermediate jet plug | **N/A** |
| **11.** | Intermediate passage plug | **N/A** |
| **13.** | Idle mixture screw | **11-2354** |
| | *5 pack* | **11-2378** |
| **14.** | Idle mixture screw spring | **11-2052** |
| | *10 pack* | **11-2060** |
| **23.** | O-ring -1 ¾" or 1 ⅞" | **50-8013** |
| **26.** | Main discharge tube | **N/A** |
| **27.** | Main jet - gas or fuel | **N/A** |
| **28.** | Intermediate jet | **N/A** |
| **29.** | Bowl gasket | **11-2070** |
| **30.** | Float | **N/A** |
| **31.** | Float pin | **N/A** |
| **32.** | Bowl screw - 10-24 x ¾" | **50-0032** |
| **33.** | Carb bowl assembly | **N/A** |
| **34.** | Bottom plug | **N/A** |
| **35.** | Seat o-ring | **N/A** |
| **39.** | Fiber washer | **N/A** |
| **40.** | Float mounting bracket | **N/A** |
| **41.** | Washer - ¼" | **N/A** |
| **51.** | Choke assembly | **N/A** |
| **52.** | Throttle shaft bushing - for repair only N/S | **11-2134** |
| **53.** | Needle & seat assembly | |
| | Fuel | **N/A** |
| **54.** | Lockwasher - #10 | **50-7000** |
| **55.** | Intermediate air bleed | **N/A** |
| **56.** | Air horn/choke mounting screw | **N/A** |
| **57.** | Float bracket bolt - ¼ -28 x ½" | **N/A** |
| **58.** | Nut - ¼ -28 | **N/A** |
| **59.** | Spring, Idle/Accelerator Pump, Super B/D/E/G, .032" Wire, .213" x .245" x .506", Stainless Steel | **11-2048** |
| | *10 pack* | **11-2053** |
| **60.** | Screw, SLTD FH, 8-32 x 7/8", Zinc, Steel | **50-0038** |
| | *10 pack* | **50-0150** |
| **61.** | Screw, SLTD FH, 8-32 x 5/8", Zinc, Steel | **50-0039** |
| | *10 pack* | **50-0146** |
| **62.** | Screw, SLTD FH, 8-32 x 5/16", Zinc, Steel | **50-0030-S** |

***CARBURETOR REBUILD KITS***

**Body Rebuild Kit**

G/GA *(includes: #3, 4, 23, 29, 52)* **11-2900±**

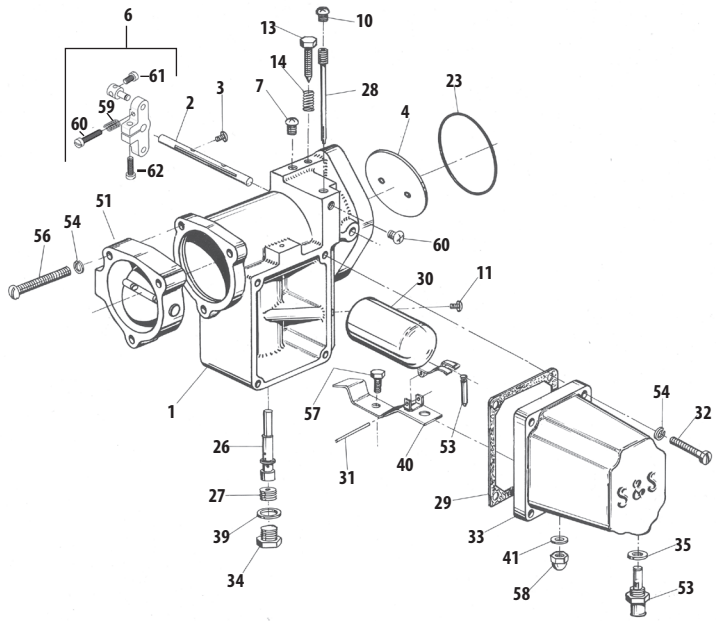


***Early Style Gas & Fuel CarburetorS***

Years Produced: *Gas 1967 to 1971 , Fuel 1967 to 1974*

Sized Produced: *1⅞" and 1¾" throats*

Identification markings: *Serial number stamped on body below "S&S Cycle" - "G" or "GA" means gas type with 1⅞" throat - "GB" means gas with 1¾" throat - "F" or "FA" means fuel with 1⅞" throat - "FB" means fuel with 1¾" throat.*

*NOTE - Some 1¾" carbs were bored out to 1⅞".*

Distinguishing Characteristics: *Bolt-on choke assembly, gas type only. Side mounted float bowl. Air cleaner/air horn mounting pattern different from stock.*

N/A = NO LONGER AVAILABLE

N/S = NOT SHOWN

***NOTE:*** Some fuel carbs have been converted and are equipped with two float bowls. When ordering parts, please supply the carb serial number. To order a manifold or air cleaner assembly or any related parts, refer to the Manifold or Air Cleaner sections of this catalog.

± ⚠ WARNING: Cancer and Reproductive Harm–www.P65Warnings.ca.gov

# SUPER E & G AIR CLEANERS REPLACEMENT PARTS

## FOR 1936–'84 BIG TWINS & 1957–'85 SPORTSTER® MODELS

**1.** Air cleaner cover–All
*(Except shovelhead w/5 gallon tanks & cylinders + .075")*
Chrome ..... **17-0378±**
Gloss Black ..... **170-0384A**
Slasher ..... **17-0004±**
Shovelhead w/5 gallon tanks & cylinders +.075" ..... **17-0372±**

**2.** Element, pleated ..... **106-4722**
Element, pleated carbon ..... **17-0375**

**3.** Backplate
BT 1936-'84 ..... **17-0330**

**4.** Cover screw
Nickel *1305 (each)* ..... **50-0072**
*3 pack* ..... **50-1052**
*10 pack* ..... **50-0094**
Black *902 (each)* ..... **50-0310-S**
*3 pack* ..... **50-0310**
Chrome *(each)* ..... **50-0347-S±**

**5.** Backplate screw
Zinc Plated *(each)* ..... **106-2084**
*10 pack* ..... **106-2105**

**6.** Fast idle friction washer *(each)* ..... **50-7035**
*10 pack* ..... **50-7058**

**7.** Fast idle steel washer *(each)* ..... **50-7037**
*10 pack* ..... **50-7061**

**8.** Fast idle nylon washer *(each)* ..... **50-7036**
*10 pack* ..... **50-7060**

**9.** Fast idle lever ..... USA 1,2,3 **17-0329**

**10.** Fast idle brass washer *(each)* ..... **50-7007±**
*10 pack* ..... **50-7010±**

**11.** Fast idle lever screw (one required for current backplate) *(each)* ..... **50-0041**
*10 Pack* ..... **50-0062**

**12.** Shims
5⁄16" x .125"
*(Use on BT 1936-'84 when insulator block is installed.)*
*each* ..... **50-7042**
*2 pack* ..... **50-7042P**

**13.** Backplate mounting bolt–BT 1936-'84
5⁄16"-18 x 1" *(each)* ..... **50-0108**
5⁄16"-24 x 3⁄4" ***(Obsolete)*** ..... **N/A**

**14.** Elbow fitting *(each)* ..... **50-8110**

**15.** Crankcase breather hose
a. BT 1978-'92 ..... **17-0113**

**16.** Vent hose connector ..... **50-8111**

**17.** Backplate plug 1⁄8"-27 *(each)* ..... **50-8331A**
*10 pack* ..... **50-1015**

**18.** Locknut–5⁄16"-1
(Use with support bracket - see #19) ..... **50-5021**

**19.** Support bracket
a. BT 1966-'82 ..... **17-0392**
b. BT 1983-'84 *(includes #13, 18, 28)* ..... **16-0471**
c. BT 1948-'65 ..... **16-0096**
d. XL 1957-'85 ..... **17-0393**

**20.** Mounting bracket bolt–big twin
a. IH XL 1957-'85–5⁄16"-18 x 1 1⁄4" *(each)* ..... **50-0110**
b. 1966-'82–5⁄16"-18 x 5⁄8" *(each)* ..... **50-0106**

**21.** Lockwasher–5⁄16" ..... **50-7032**

**22.** Flatwasher–5⁄16" x 1⁄8" ..... **50-7033**

**23.** Wire tie (N/S) ..... **50-8003**

**24.** Hose clamp (N/S) ..... **50-8002**

**25.** Air cleaner assembly
Includes:
*Chrome cover, backplate, filter element, and hardware kit.)*
BT 1936-'84/1957-'85 XL ..... **17-0400±**
BT 1966-'84 with five gallon tanks and cylinders .075" longer than stock ..... **17-0440±**

**26.** Mounting hardware package (N/S)
*Includes all parts needed to install following style air cleaners:*
BT 1936-'84 ..... **17-0441±**

**27.** Spring clamps (N/S) ..... **50-8001**

**28.** Washer,Flat,.344" x .688" x .065",Zinc,Steel *6320, 70907-07, 6016, 6702* ..... **50-7034**

**(N/S) = Not Shown**
**N/A= No longer available**

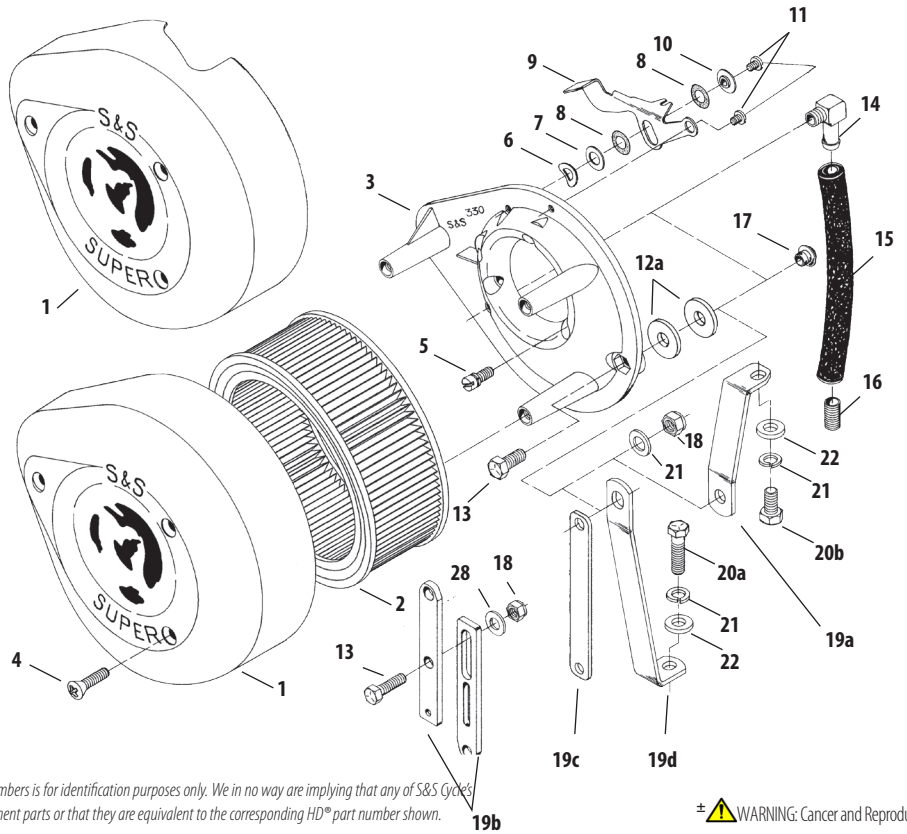


*All reference to HD® part numbers is for identification purposes only. We in no way are implying that any of S&S Cycles products are original equipment parts or that they are equivalent to the corresponding HD® part number shown.*

± ⚠ WARNING: Cancer and Reproductive Harm–www.P65Warnings.ca.gov

# SUPER B AIR CLEANER REPLACEMENT PARTS

**1.** Air cleaner cover
Chrome ..... **17-0078**±
Black ..... **17-0075**
**2.** Air cleaner element ..... **17-0079**
**3.** Air cleaner backing plate
Super B 17⅞" ..... **N/A**
**4.** Air cleaner cover screw
Chrome *1305 (each)* ..... **50-0072**±
*3 pack* ..... **50-1052**±
*10 pack* ..... **50-0094**±
Black *902 (each)* ..... **50-0310-S**
*3 pack* ..... **50-0310**
**5.** Support bracket
a. 1948-'65 panhead ..... **16-0096**
b. 1983-'84 shovelhead ..... **16-0471**
**6.** Air cleaner support bracket
1957-'85 XL ..... **17-0093**
**7.** Air cleaner support bracket
1966-'82 BT ..... **17-0092**
**8.** Washer,Flat,.281" x .625" x .080",Zinc *6194, 6245, 6703, 6736, 6228W, 6192 (each)* ..... **50-7021**
**9.** Nut,Lock,HH,¼-28 UNC-2B x .328",Zinc *(each)* ..... **50-5010**
**10.** Vent hose connector nipple ..... **50-8111**
**11.** Vent hose - ⅜" I.D. x 6" ..... **17-0113**
**12.** 90° elbow fitting *(each)* ..... **50-8110**
**13.** Support bracket bolt–¼"-28 x ⅞" ..... **50-0074**
**14.** Backplate screw, Zinc Plated *(each)* ..... **106-2084**
*10 pack* ..... **106-2105**
**15.** Air cleaner gasket *(each)* ..... **17-0196**
*5 pack* ..... **17-0197**
**16.** Allen pipe plug - ⅛" -27
*each* ..... **50-8331A**
*10 pack* ..... **50-1015**
**17.** Plastic plug ..... **50-8313**
**18.** Bolt,Hex Head,Gr5,5⁄16-18 x 1",Zinc *3987* ..... **50-0108**
**19.** Washer,Flat,.344" x .688" x .065",Zinc,Steel
*6320, 70907-07, 6016, 6702* ..... **50-7034**
**20.** Nut, Lock, HH, 5⁄16-18 UNC-2B x .359", Zinc ..... **50-5021**

*S&S® Super B Carburetor (Brackets not included)*
**17-0099**±

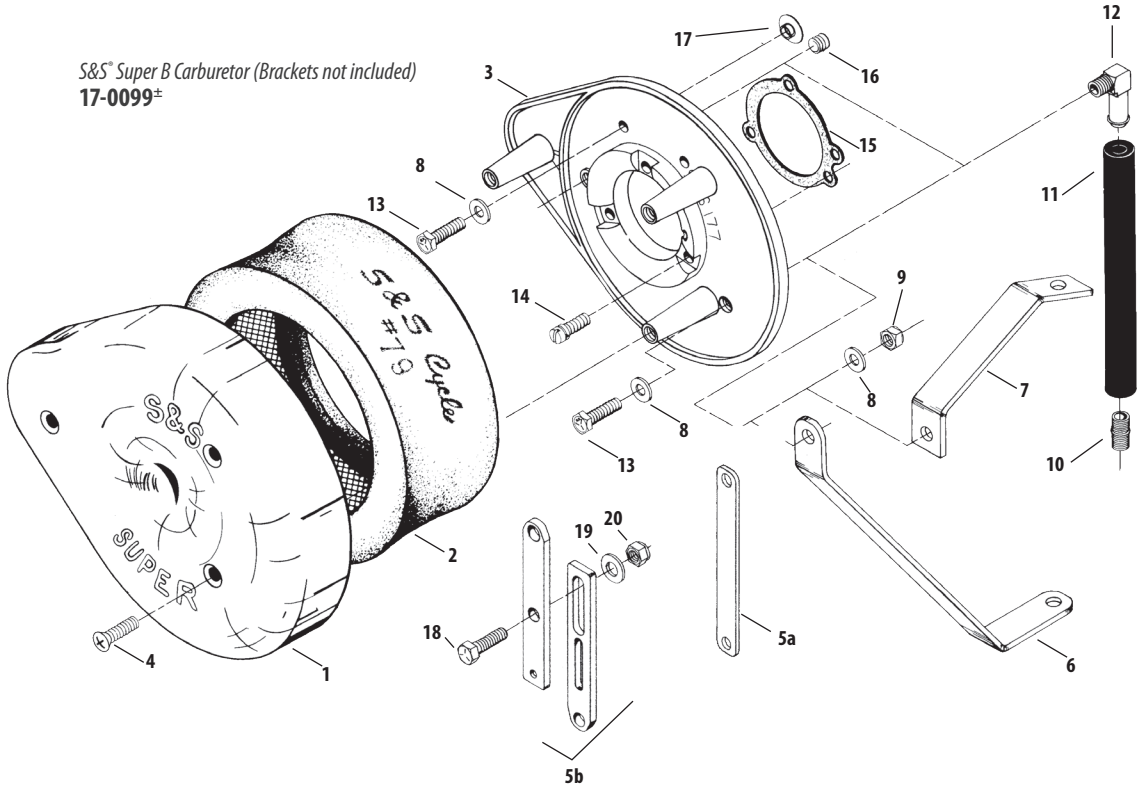


*All reference to HD® part numbers is for identification purposes only. We in no way are implying that any of S&S Cycle's products are original equipment parts or that they are equivalent to the corresponding HD® part number shown.*

± WARNING: Cancer and Reproductive Harm–www.P65Warnings.ca.gov

# UNIVERSAL STEALTH AIR CLEANER
## REPLACEMENT PARTS

**1.** Screw, SHCB, 5⁄16-18 x .500", Polished, Stainless Steel ..... **170-0508**
**2.** Screw, SHC, Flanged Button, 1⁄4-20 UNC x .750"
*(each) 2 required* ..... **500-0060**
**3.** Plate, Top, Air Filter, Molded, Plastic ..... **170-0026**
**4.** Filter, Air, Standard Pleated. ..... **170-0126**
**5.** Screw, SHCB, 1⁄4-20 UNC X .825" *(each) 3 required* ..... **500-0059**
**6.** Backplate, Air Cleaner, Super E/G, Powder coated, Black, Die Cast
1936-'92 bt, 1957-'90 xl ..... **170-0179**
**7.** Gasket, Backplate, Super E/G, CV Adapter, .0625" ..... **106-1724**
**8.** Bracket,Kit,Support,Carb,Case To Manifold,w/ Hardware,1966-99 bt, 1957-2003
xl *(includes 50-0108, 50-5021, & 50-7034)* ..... **16-0471**
a. Bolt,Hex Head,Gr5,5⁄16-18 x 1",Zinc ..... **50-0108**
b. Washer,Flat,.344" x .688" x .065",Zinc,Steel ..... **50-7034**
c. Nut,Lock,HH,5⁄16-18 UNC-2B x .359",Zinc,Steel/Nylon..... **50-5021**
**9.** Washer,Friction,Curved,.329" x .625" x .015",Zinc,Steel..... **50-7035**
**10.** Washer,Flat,.325" x .625" x .032",Zinc,Steel. ..... **50-7037**
**11.** Washer,Flat,.323" x .625" x .020",Nylon *(each) 2 required* ..... **50-7036**
**12.** Lever, Enrichment, Super E/G, Short, Buell® ..... **17-0327**
**13.** Washer,Flat,Stepped,.195" x .620" x .030",Brass ..... **50-7007**±
**14.** Screw,PH,10-24 x 1⁄4",Zinc,Steel ..... **50-0041**

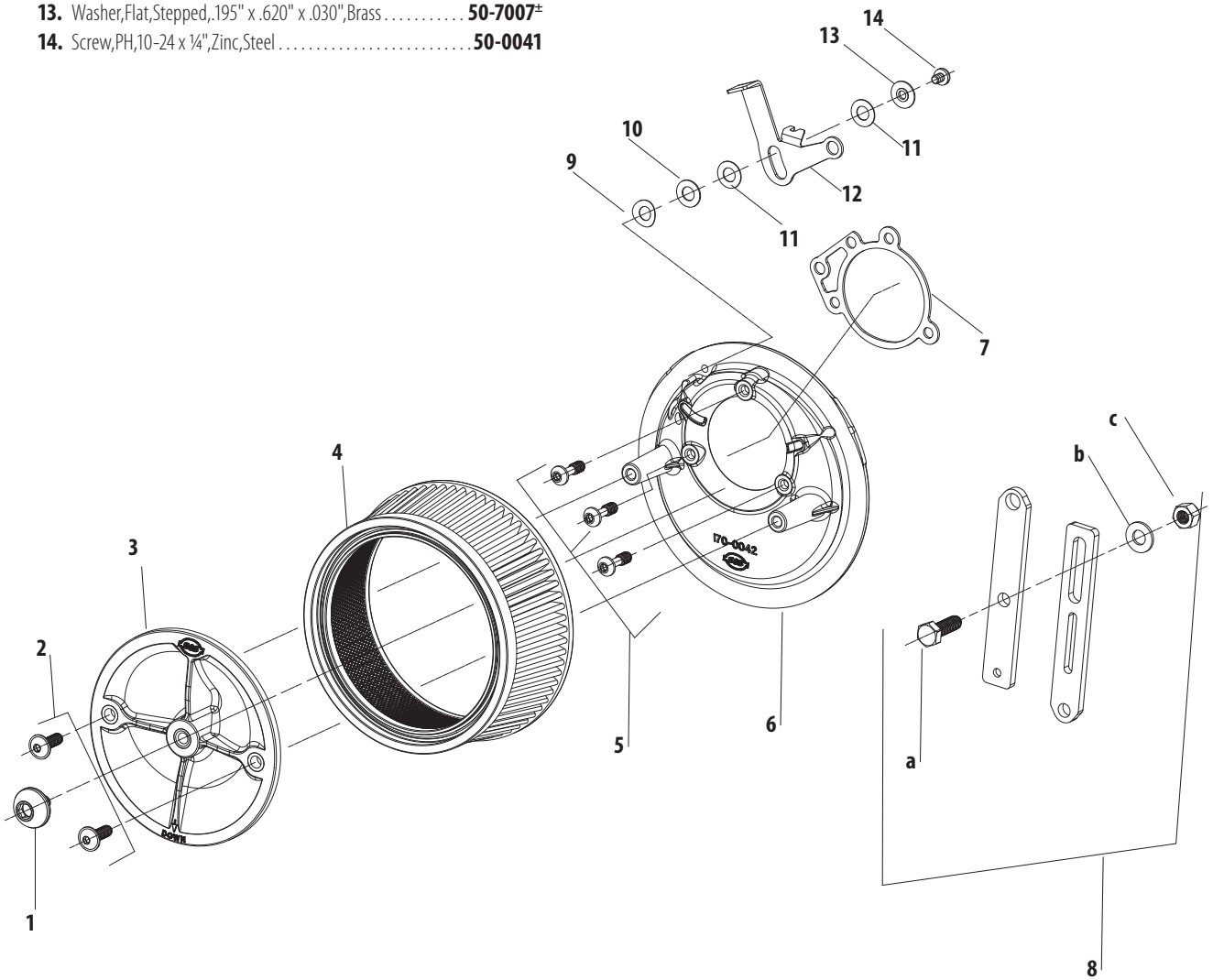


±⚠ WARNING: Cancer and Reproductive Harm—www.P65Warnings.ca.gov

# TÜV APPROVED SUPER E & G AIR CLEANER
## REPLACEMENT PARTS

**1.** Air cleaner cover
Chrome ..... **17-0378±**
**2.** Element, pleated carbon–TÜV ..... **17-0375**
**3.** Backplate
1955-'84 bt TÜV ..... **N/A**
1955-'84 bt, 1957-'85 IH XL ..... **17-0330**
**4.** Cover screw
Nickel *1305 (each)* ..... **50-0072**
*3 pack* ..... **50-1052**
*10 pack* ..... **50-0094**
Black *#902 (each)* ..... **50-0310-S**
*3 pack* ..... **50-0310**
Chrome *(each)* ..... **50-0347-S±**
**5.** Backplate screw
Zinc Plated *(each)* ..... **106-2084**
*10 pack* ..... **106-2105**
**6.** Fast idle friction washer *(each)* ..... **50-7035**
*10 pack* ..... **50-7058**
**7.** Fast idle steel washer *(each)* ..... **50-7037**
*10 pack* ..... **50-7061**
**8.** Fast idle nylon washer *(each)* ..... **50-7036**
*10 pack* ..... **50-7060**
**9.** Enrichment lever ..... USA 1,2,3 **17-0329**
**10.** Fast idle brass washer *(each)* ..... **50-7007±**
*10 pack* ..... **50-7010±**
**11.** Fast idle lever screw *(each)* ..... **50-0041**
*10 pack* ..... **50-0062**
**12.** Crankcase breather hose
TÜV 1970-'84 ..... **17-0113**
**13.** Backplate plug ⅛"-27
*each* ..... **50-8331A**
*10 pack* ..... **50-1015**
**14.** Flatwasher–5⁄16" x 1⁄16" *6320, 70907-07, 6016, 6702* ..... **50-7034**
**15.** Mounting bracket bolt *3987*–
5⁄16"-18 x 1" ..... **50-0108**
**16.** Plate, air cleaner noise reducer ..... **17-0389**
**17.** Rubber isolator mounts *(each)* ..... **50-8510-S**
**18.** Shim, spacers, ½" OD x ¼" ID x .080" *(each)* ..... **50-7971-S**
**19.** Locknut, HH, 5⁄16" -18 ..... **50-5021**
**20.** Spring clamps (N/S)* ..... **50-8001**
**21.** Restrictor Plate ..... **N/A**
**(N/S) = Not Shown**

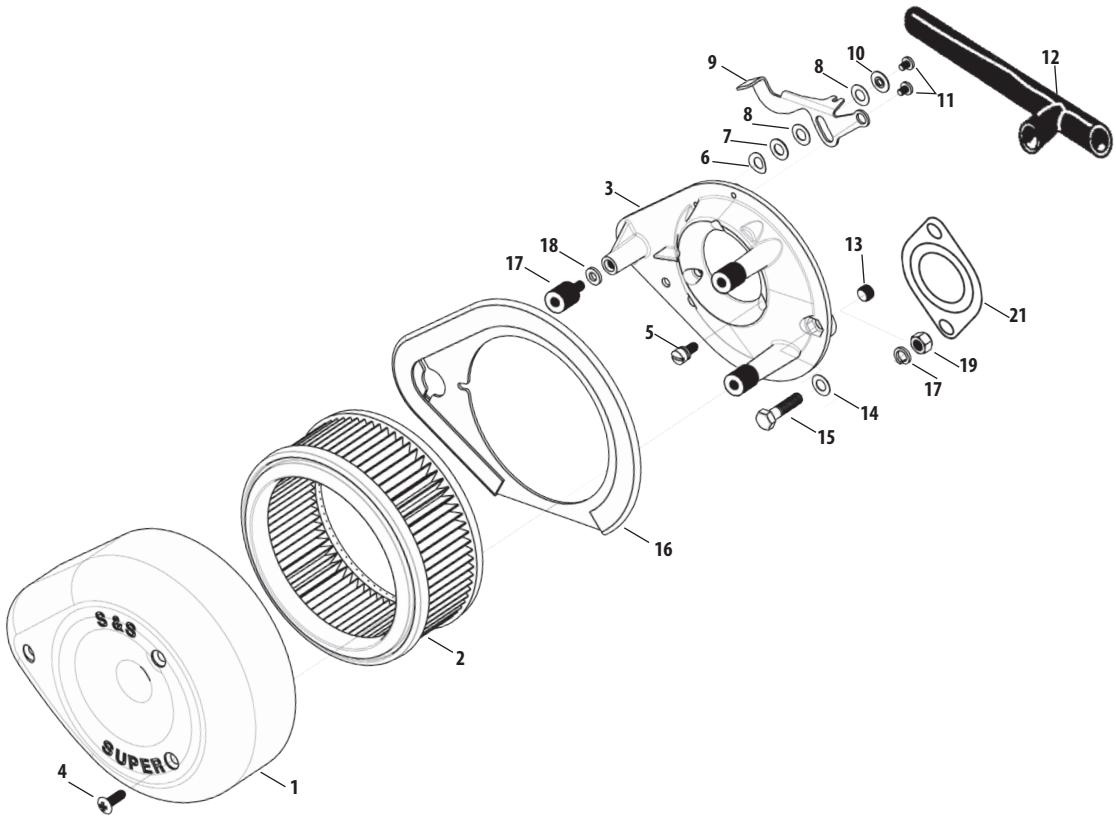


**17-0445**

*All reference to HD® part numbers is for identification purposes only. We in no way are implying that any of S&S Cycle's products are original equipment parts or that they are equivalent to the corresponding HD® part number shown.*

± ⚠ WARNING: Cancer and Reproductive Harm–www.P65Warnings.ca.gov

# 5-SPEED TRANSMISSION CASE REPLACEMENT PARTS
## FOR 4-SPEED BIG TWIN CHASSIS

**1.** Transmission case assembly , 5-speed 1965-'84 4-speed BT. **56-1051**
**2.** Transmission case only, 5-speed rigid mount for 1965-'84 4-speed BT frame **N/A**
**3.** Screw, SH ½"-20 x ⅜" **50-0202**
**4.** Nut, hex - 7/16"-14 *each* **50-5044**
**5.** Pin, dowel - .308" diameter x .70"
*375* **50-8029**
**6.** Stud - ⅜"-16; ⅜"-24 x 1 13/16" (4) (BT 5-speed) **50-8085**
**7.** Stud - ⅜"-16; ⅜"-24 x 2 5/16" (4) (5-speed BT) **50-8086**
**8.** Pin, Roll - ⅜" x .300" (4) *609* **50-8173**
**9.** Screw, shifter lever adjustment, 5-speed BT
*33119-79B* **56-1002**
**10.** Guide, shifter shaft - 5-speed rigid mount, 1986-'99 BT *33114-79* **56-1067**
**11.** Screw, SLTD FH, 5/16"-18 x ¾" (4) **50-0300**
**12.** O-ring, 7/16" I.D. x 9/16" O.D. x 1/16" Viton
*11105, 11273 each* **50-8008**
*10 pack* **50-8078**
**13.** Seal, quad, 1 49/64" I.D. x 1⅞" O.D. x 1/16" Buna
*11165* **50-8045**
**14.** Plug, ½"-20, magnetic
USA 1,2,3 **50-8335**
**15.** Spacer, mainshaft adapter, 5-speed rigid mount 1965-'84 4-speed BT. **56-1068**
**16.** Adapter, transmission mounting stud, 5-speed rigid mount/1965-'84 4-speed BT. **56-1069**
**17.** Nut, transmission sprocket **56-3003**
**18.** Spacer, transmission sprocket, 1941-'92 BT. **56-3004**
**19.** Bearing, inner primary (25mm x 47mm x 12mm) **56-5100**
**20.** Seal, inner primary - 4-speed BT **56-5101**
**21.** Ring, internal retainer, 3.734" O.D. x .109" Tru-Arc
*11161, 11599* **50-8051**
**22.** Seal, oil shifter shaft - 1984-'99 BT
*12045* **56-1064**
**23.** Bearing, transmission output shaft, 1984-'99 BT
*8996A* **56-1280**
**24.** Seal, oil *12067B* **56-3033**
**25.** Bearing, transmission countershaft. **56-3034**
**26.** Door assembly, transmission access 5-speed rigid mount, 1985-'99 BT **56-1027**
**27.** Capscrew, SH - ¼"-20 x 1¾" (2) *4740A, 3482A* **50-0008**
**28.** Capscrew, SH - 5/16"-18 x 1¼" (4)
*3210A* **50-0121**
**29.** Washer, flat - ¼" x 7/16" x 1/16" (2)
*each* **50-7017**
*12 pack* **50-7013**
**30.** Washer, flat - 5/16" x .545" x .042" (4) **50-7026**
**31.** Ring, internal retainer, 2.072" O.D. x .062" Tru-Arc (2)
*35021-89* **50-8053**
**32.** Dowel - 5/16" x ¾" *634 (each)* **50-8175**
**33.** Plug, magnetic - ⅛"-27 *739A* **50-8334**
**34.** Door, transmission access - 5-speed rigid mount
1985-'99 BT *35258-87C* **56-1025**
**35.** Gasket, transmission access door
*35652-79B, 35653-98A* **56-1026**
**36.** Bearing, transmission access door (2)
*8992A, 8998* **56-3026**

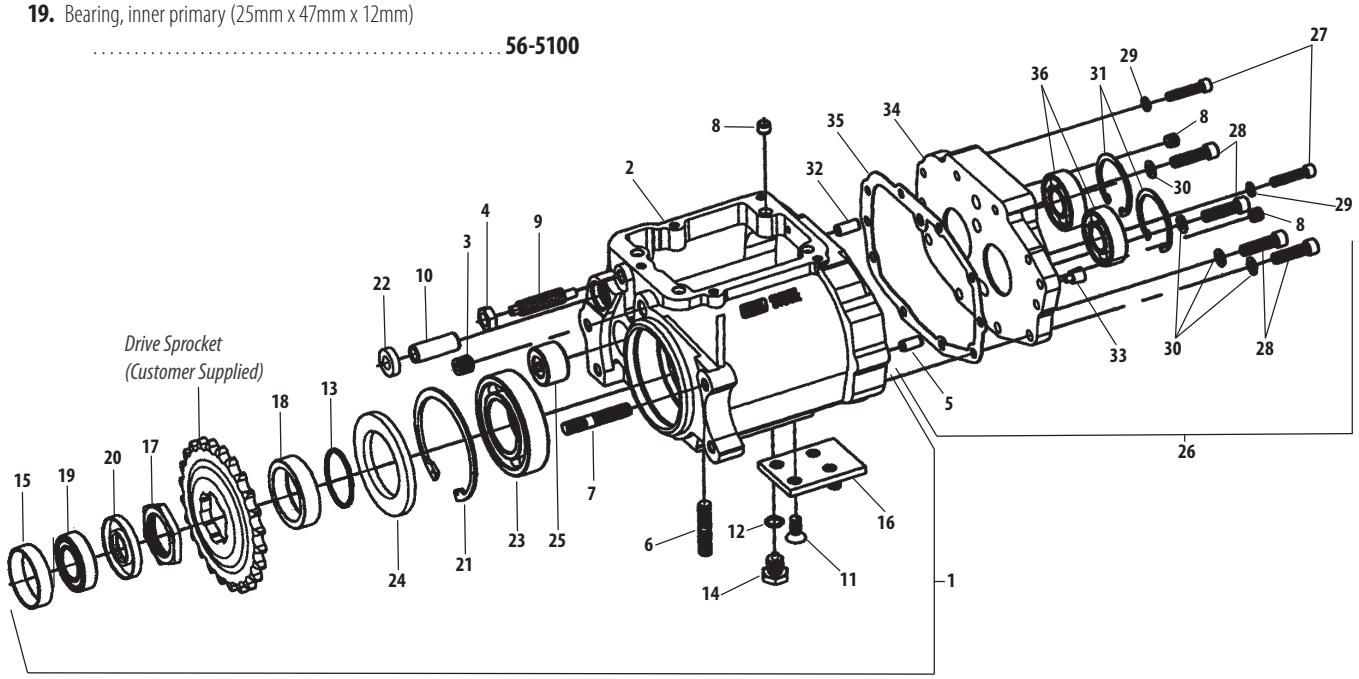


*All reference to HD® part numbers is for identification purposes only. We in no way are implying that any of S&S Cycle's products are original equipment parts or that they are equivalent to the corresponding HD® part number shown.*

# TOOLS & SHOP SUPPLIES





Anti-Rotation Bracket....212
Bearing Protector Tools....208
Boring Plate Kits....209
Cam Alignment Tools....208
Carburetor Jet Kits....214
Champion® Spark Plugs....213
Compression Release Socket Kit....209
Connecting Rod Checking Pins....209
Crankcase Oil Passage Drilling Jig....212
Crankpin Nut Clearancing Gauges....212
Cylinder Torque Plate Kits....210
Dealer Service Kit (Exhaust)....216
Degree Wheel Kit....211
Engine Stands....216
Flywheel Balancing Kits....206
Flywheel Tools....207
Inner Primary Bearing Race Installer....208
Main Bearing Installation Tool....208
Main Jet Tool....209
Oil Filters....213
Rocker Cover Wrench Set....209
S&S® Oil....213
Tappet Block Alignment Tool....212
Top Dead Center Tool....209
Top End Tools....209
Touch Up Paint, Lubricant, Sealants....216
X-Wedge® Tools....208

# FLYWHEEL BALANCING KITS

## THE S&S® MASTER FLYWHEEL BALANCING KIT

| Description | Part # |
|---|---|
| Designed to allow the average shop to rebalance stock and S&S flywheels accurately and quickly. Whether doing a stock rebuild or a performance upgrade using aftermarket parts, flywheel rebalancing is a desirable step in the engine building process. A complete set of detailed instructions is furnished with each kit. For flywheels with tapered crankpins only. | **53-0027** |

### Replacement Parts

| | | |
|---|---|---|
| 1. Balance,Triple Beam Platform | | **N/A** |
| 2. Replacement balance weight set, (1-500g 2-1000g) | | **53-0021** |
| 3. Balance shaft, 1936–'71 OHV bt and 1957–'71 xl | | **53-0090** |
| 4. Balance shaft nut *(each)* | | **53-0092** |
| 5. Balance stand *(each)* | | **53-0088** |
| 6. Rod support stand *(each)* | | **53-0089** |
| 7. Taper adapter, 1972–Early '81 bt *(each)* | | **53-0086** |
| 8. Taper adapter, Late 1981–'85 bt and S&S BL, SE, SL style *(each)* | | **53-0087** |
| 9. Shaft adapter, 1977–up xl driveside (screws on) *(each)* | | **53-0093** |
| 10. Shaft adapter, 1977–up xl camside (screws on) *(each)* | | **53-0095** |
| 11. Shaft adapter, 1955–'99 bt driveside (screws on) *(each)* | | **53-0091** |
| 12. Shaft adapter, 1958–'92 bt camside (LH, screws on) *(each)* | | **53-0101** |
| 13. Shaft adapter, 1993–'99 bt camside (RH, screws on) *(each)* | | **53-0102** |
| 14. Shaft adapter, counterweight *(each)* | | **53-0099** |
| 15. Collar spacer, 1970–'99 bt *(each)* | | **53-0097** |
| 16. Collar spacer, 1986–'90 driveside for xl - .280" *(each)* | | **53-0098** |
| 17. Collar spacer. 1991–up driveside for xl - .860" *(each)* | | **53-0085** |
| 18. Bob weight assembly, 1000 gram *(each)* | | **53-0094** |
| **Repair parts for 53-0094** | | |
| Screw SHC, ½"-13 x ¾" | *Each* | **50-0200** |
| Screw SHC, ½"-13 x 1¼" | *Each* | **50-0201** |
| 19. Shims | | |
| 2.7 gram | *Each* | **53-0110** |
| 5.4 gram | *Each* | **53-0105** |
| 8.1 gram | | **53-0115** |
| 10.8 gram | | **53-0120** |
| 13.4 gram | *Each* | **53-0125** |
| 50 gram | | **53-0150** |
| 100 gram *25566-06* | | **53-0100** |
| 20. Shim Kit<br>Includes: Shims *(2 each)* 2.7, 5.4, 8.1, 10.8, and 13.4 grams & Shims *(1 each)* 50 grams and 100 grams | | **53-0111** |

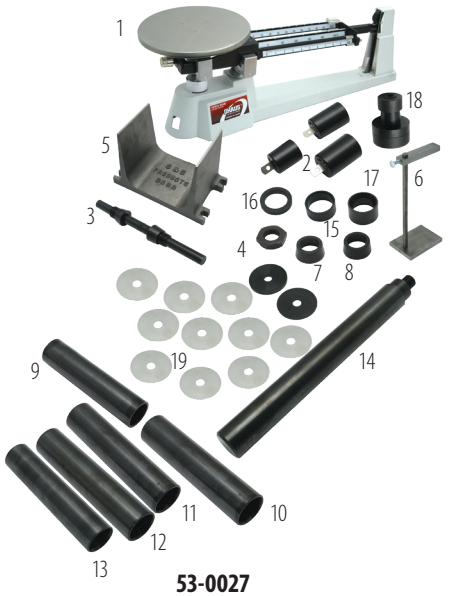


**53-0027**

## S&S® FLYWHEEL BALANCE KITS

### Master Balance Kit Without Balance Scale

| | |
|---|---|
| Includes all parts in #53-0027, except balance & platform scales | **53-0028** |

### Triple Beam Platform Balance Scale

| | |
|---|---|
| (2610 grams\maximum) without weights | **53-0011** |

### Flywheel Balance Kit For 5-Piece Cranks

| | |
|---|---|
| For 5-Piece Crank | **53-0012** |
| Includes: | |
| 3. Balance shaft | **53-0090** |
| 4. Balance shaft nut | **53-0092** |
| 5. Balance stand | **53-0088** |
| 6. Rod support stand | **53-0089** |
| 7. Taper adapter | **53-0086** |
| 8. Taper adapter | **53-0087** |
| 18. Bob weight 1000 gram | **53-0094** |
| 19.Shims (See previous page for individual part numbers) | |

### Flywheel Balance Kit For 3-Piece Cranks

| | |
|---|---|
| For Harley-Davidson® Evolution® and Sportster® Models | **53-0015** |
| Includes: | |
| 9. Driveside adapter sleeve for 1977–up Sportster | **53-0093** |
| 10. Camside adapter sleeve for 1977–up Sportster | **53-0095** |
| 11. Driveside adapter sleeve for 1955–'99 big twin | **53-0091** |
| 12. Camside adapter for 1958–'92 big twin | **53-0101** |
| 13. Camside adapter for 1993–'99 big twin | **53-0102** |
| 14. Shaft counterweight | **53-0099** |
| 15. Collar spacer for 1970–'99 big twin | **53-0097** |
| 16. Collar spacer for 1986–'90 Sportster | **53-0098** |
| 17. Collar spacer for 1991–up Sportster | **53-0085** |

***NOTE:*** These balancing kits will not work with Harley-Davidson® Twin Cam 88® engines, 2000-up Sportster models, or any flywheel assemblies which use pressed-in crankpins.




**53-0015**




**53-0028**




**53-0012**

# FLYWHEEL ASSEMBLY FIXTURE & TRUING SPANNER

- Includes a massive fixture to hold the flywheels, flywheel clamps and hardware to mount the flywheel to the fixture, and a spanner bar plate to be used with a length of steel pipe to fabricate a long spanner bar for truing adjustments.
- Allows the assembler to torque the mainshaft and crankpin nuts to our higher than stock torque specs. (We recommend using a torque multiplier.) Once the flywheels are assembled, the spanner bar (some assembly required) can be used to shift the flywheels in order to bring the mainshafts into true. This method is much easier, faster, and safer than hitting the flywheels with a lead or brass hammer to true the assembly.
- Works for stock and S&S flywheels for 1936–'99 big twin and 1957–'03 Sportster® models.

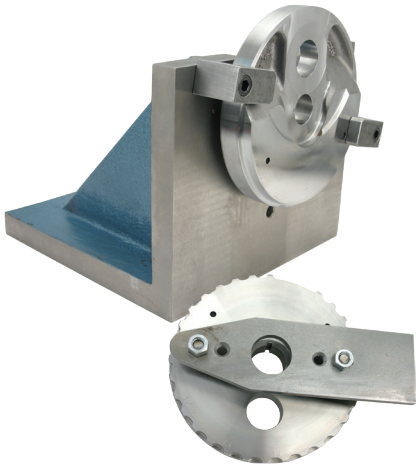

| FLYWHEEL ASSEMBLY FIXTURE | |
|---|---|
| **Description** | **Part #** |
| Includes clamps, plate, and hardware | **106-0552** |
| **REPLACEMENT PARTS** | |
| Flywheel Fixture Clamp | **106-0483** |
| Spanner Bar Plate | **106-0783** |

# BEARING PROTECTOR TOOLS FOR S&S® X-WEDGE® ENGINES

## FEATURES AND BENEFITS

- Slips over the bearing surface of the X-Wedge crankshaft to prevent damage to the surface of the main bearing journal when mounting the crank on an S&S flywheel assembly fixture
- The flanged sleeve offers protection against scratches and dents
- It can also be used on the sprocket side of Victory® crankshafts
- Made of billet aluminum



106-2858



106-2859



1

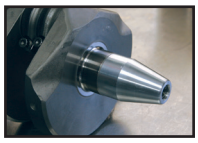

2

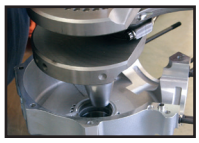

3

*Easy as 1-2-3! 106-2859 crankcase bearing protector installs in seconds, and not only protects the crankcase main bearing insert from the sharp surfaces on the sprocket shaft, but also guides the crankshaft into the bearing.*

**BEARING PROTECTOR TOOLS**

| Description | Part # |
|---|---|
| Crankshaft Main Bearing Protector | **106-2858** |
| Crankcase Main Bearing Insert Protector | **106-2859** |

# CAM ALIGNMENT TOOLS FOR X-WEDGE® ENGINES

- Three dowel pins are used to position each of the three cam belt pulleys with alignment holes in the cam plate



106-0750

**CAM ALIGNMENT TOOLS**

| Description | | Part # |
|---|---|---|
| Cam Alignment Dowels | *3 pack* | **106-0576** |
| Cam Belt Tensioner Socket | | **106-0750** |

# MAIN BEARING INSTALLATION TOOL FOR X-WEDGE® ENGINES

- Consists of a bearing guide that holds the two plain bearing halves in position and a shouldered press tool that fits through the guide to press the new bearings into the crankcase
- The press tool is also used by itself to press old bearings out of the crankcase
- For cam and driveside bearings in X-Wedge engines
- A hydraulic or arbor press is required to install or remove bearings.



| | |
|---|---|
| Main Bearing Installation Tool | **106-0718** |

# PRIMARY INNER BEARING RACE INSTALLATION TOOL

- Primary inner bearing race installation tool, with a roller thrust bearing that decreases the effort required to install a bearing race by 30%
- Attachment for the S&S Clutch Puller that allows easy removal of the primary inner bearing race
- All of these S&S tools are CNC machined from the finest 4140 tool steel and heat treated for maximum reliability and service life.



| | |
|---|---|
| Inner Primary Bearing Race Installer | **56-5145** |

# TOP DEAD CENTER TOOL

- Easy to find the exact top dead center of any engine
- The best way to calibrate your degree wheel when dialing in cams or performing any number of checks and modifications based on the position of the crankshaft
- Available for engines with 14mm or 12mm spark plug holes



53-0322



53-0040



53-0452



53-0045

***NOTE :*** Rocker covers must be removed when installing S&S compression releases. If lack of frame clearance prevents removal of rocker covers, engine must be removed from frame for compression release installation.

### S&S® TOP DEAD CENTER TOOL

| Description | Part # |
|---|---|
| 14mm | **53-0321** |
| 12mm | **53-0322** |

### S&S ROCKER COVER WRENCH SET

| | |
|---|---|
| Helpful in areas where the motorcycle frame may prevent the use of conventional tools | **53-0040** |

### CONNECTING ROD CHECKING PINS

These pins are used to check alignment of connecting rods and wristpin bushings with crankcase cylinder decks

| | |
|---|---|
| .927" | **53-0004** |

### S&S COMPRESSION RELEASE SOCKET KIT

| | |
|---|---|
| Allows in-frame installation of S&S compression releases and protects wiring from damage during installation | **53-0045** |

### MAIN JET TOOL

| | |
|---|---|
| For changing main jets in all S&S carburetors using #72 series jets | **53-0452** |

# BORING PLATE KITS FOR CYLINDER HEADS AND CRANKCASE

- Designed to simplify and reduce the time required to prepare crankcases and cylinder heads for S&S® Sidewinder® big bore kit installations
- Machined cast iron with precision ground working surfaces



53-0006

### BORING PLATE KIT FOR 1936–'99 BIG TWIN AND 1986–'03 SPORTSTER® MODELS

| Description | Part # |
|---|---|
| This boring plate kit has panhead and shovelhead head bolt patterns in one end. The other end is machined with the cylinder base patterns of 1936-'99 big twin engines, and 1986-'03 Harley-Davidson® Sportster models. Spacers are available for Evolution® engines which allow the cases to be bored without removing the cylinder studs (see below). Spacers are not included in this kit. | |
| **Kit** | **53-0006** |
| Screw, 7/16" -20 x 1¼" Sockethead Cap | **50-0172** |

### SPACERS FOR EVOLUTION CRANKCASES

Spacer part #53-0007 is required for 1986–'03 Sportster models.
Spacers part #53-0007 and #53-0008 are both required for 1984–'99 big twin engines.

| | |
|---|---|
| 3 11/16" tall | **53-0007** |
| ⅞" tall | **53-0008** |



53-0007



53-0008

### BORING PLATE KIT FOR CRANKCASES & CYLINDERS FOR TWIN CAM 88® ENGINES

This boring plate kit is designed for boring stock crankcases of Harley-Davidson® Twin Cam 88® engines to accept S&S Super Sidewinder® 4" and 4⅛" bore cylinders with stock cylinder stud pattern. A spacer is included with the kit which allows the cases to be bored without removing the cylinder studs.

| | |
|---|---|
| **Kit** | **53-0035** |
| Boring plate | **53-0036** |
| Spacer, 3¾" tall | **53-0037** |



53-0035



# CYLINDER TORQUE PLATE KITS

## FITMENT

- S&S 4⅛" bore
- 4" bore 1999–up big twin
- 3⅝" 1984–'99 big twin
- Harley-Davidson® Sportster® models in 3⅝" and 4" bore
- S&S X-Wedge® 4⅛" bore and 4¼" bore*

## FEATURES AND BENEFITS

- S&S torque plates can be used in conjunction with an S&S boring fixture and a conventional boring bar, and they can be readily adapted to a Sunnen® type honing machine.

## KIT CONTENTS

- Head end plate
- Base end plate
- Four long grade 8 socket head cap screws (holds the assembly together and supplies the pressure)
- Stop arm (keeps the cylinder and plates from turning while honing)

**These torque plates are required to bore or hone X-Wedge cylinders. They have the X-Wedge five bolt pattern and are available for 4⅛" bore and 4¼" bore cylinders.*

## CYLINDER TORQUE PLATE REPLACEMENT PARTS

(See chart for specific part numbers.)

**1.** Base end torque plate
**2.** Head end torque plate
**3.** Stop arm
**4.** Torque bolts
**5.** Vise tab
**6.** Tab bolt




### S&S® CYLINDER TORQUE PLATE KITS AND REPLACEMENT PARTS

| Bore Size | Case Bolt Pattern | Kit Part # | Head End Plate | Base End Plate | Stop Arm | Bolt ⅜"-24 x 6" | Bolt 7/16"-20 x 6" | Bolt 7/16"-20 x 7" | Bolt M10 x 1.5MM x 160MM | Vise Tab | Tab Bolt 5/16"-18 x 1" |
|---|---|---|---|---|---|---|---|---|---|---|---|
| 4.25 | 2017– up M8 | **530-0038** | **530-0039** | **530-0044** | **53-0014** | – | – | **50-0192** | – | **53-0034** | **50-0108** |
| 4⅛" - 4¼" | S&S® X-Wedge® | – | **106-0837** | **106-0835** | **53-0014** | **106-0840** | – | – | – | **53-0034** | **50-0108** |
| 4⅜" - 4 7/16" | S&S 4⅜" Pattern | **53-0055** | **53-0056** | **53-0057** | **53-0014** | – | – | **50-0192** | – | **53-0034** | **50-0108** |
| 4⅛" | Stock 1999–up big twin | **53-0054** | **106-3190** | **530-0060** | **53-0014** | – | – | – | **500-1053** | **53-0034** | **50-0108** |
| 4⅛" | S&S 4⅛" Pattern | **53-0051** | **53-0052** | **53-0053** | **53-0014** | – | **50-0191** | – | – | **53-0034** | **50-0108** |
| 3.927" - 4" | Stock 1999–up big twin | – | **53-0049** | **53-0050** | **53-0014** | – | – | **50-0192** | – | **53-0034** | **50-0108** |
| 4" | S&S 4" Pattern | **53-0030** | – | **53-0032** | **53-0014** | – | **50-0191** | **50-0192** | – | **53-0034** | **50-0108** |
| 3⅝" | 1984–'99 big twin | **53-0016** | **53-0017** | **53-0018** | **53-0014** | – | – | **50-0192** | – | **53-0034** | **50-0108** |
| 3⅝" | 1984–'03 Sportster® | **53-0016** | **53-0017** | **53-0018** | **53-0014** | – | – | **50-0192** | – | **53-0034** | **50-0108** |

*S&S Cylinder torque plate kits are intended for aluminum cylinders including 1984-'99 Harley-Davidson® Evolution® big twin engines, 1986-'03 Sportster models, and 1999-up Twin Cam 88® engines.*

### S&S® CYLINDER TORQUE PLATE KITS

| Bore Size | Case Bolt Pattern | Part # |
|---|---|---|
| 4.25 | 2017– up M8 | **530-0038** |
| 4⅜" -4 7/16" | S&S 4⅜" Pattern | **53-0055** |
| 4⅛" | Stock 1999–up big twin | **53-0054** |
| 4⅛" | S&S 4⅛" Pattern | **53-0051** |
| 4" | S&S 4" Pattern | **53-0030** |
| 3⅝" | 1984–'99 big twin | **53-0016** |
| 3⅝" | 1984–'03 Sportster® | **53-0016** |

*S&S Cylinder torque plate kits are intended for aluminum cylinders including 1984–'99 Harley-Davidson® Evolution® big twin engines, 1986–'03 Sportster models, and 1999–up big twin engines.*

# DEGREE WHEEL KIT

- Multipurpose S&S® degree wheel can be used to do ignition timing, crankcase breather timing, cam degreeing, or you name it
- Designed to fit the sprocket shaft of any big twin or Harley-Davidson® Sportster® model simply by using the correct adapter provided
- Each kit also comes with a pointer which is held in place with the center crankcase bolt



**S&S DEGREE WHEEL KIT**

| Description | Part # |
|---|---|
| Kit | **53-0020** |
| Adapter for Sportster® models *(1 Each)* | **53-0023** |
| Adapter for big twin *(1 Each)* | **53-0024** |
| Pointer *(1 Each)* | **53-0025** |
| Degree wheel and main adapter assembly *(1 Each)* | **53-0026** |

# CRANKPIN NUT CLEARANCING GAUGES

- Designed to simplify and eliminate clearancing problems that may arise when installing stroker flywheels in stock big twin crankcases
- By painting the bosses to be clearanced and then placing the appropriate gauge on the main bearing race, the crankcases can be marked with a scribe in the proper hole for the stroke and style connecting rod crankpin nuts to be used***—quickly and precisely.***




**S&S® CRANKPIN NUT CLEARANCING GAUGES**

| Description | Part # |
|---|---|
| 1958–'99 Big Twin Gauge | **53-0005** |

# ANTI-ROTATION BRACKET

This handy bracket slides over the sprocket shaft splines of big twin engines and bolts to one of the primary bolt holes of the crankcase to keep the crank from rotating. It's like an extra set of hands while installing pistons and cylinders.



**50-9870**

| Fitment | Part # |
|---|---|
| 1970–2006 Big Twin *(except '06 Dyna®)* | **50-9870** |
| 2007–up Big Twin, 2006 Dyna® | **530-0018** |

# CRANKCASE OIL PASSAGE DRILLING JIG



### DRILL JIG IS USED TO DRILL…

- Primary chain oil supply passage from the breather valve gear cavity to the back side of the oil pump body on late generator and early alternator crankcases.
- Pressure relief passage from behind the main oil pressure valve to the gear cavity on alternator crankcases.
- Crankshaft and main bearings supply passage on generator crankcases.
- Crankshaft and main bearings supply passage on early alternator crankcases.

**S&S CRANKCASE OIL PASSAGE DRILLING JIG**

| Description | Part # |
|---|---|
| The S&S crankcase oil passage drilling jig is used to perform crankcase drilling modifications when installing an S&S oil pump assembly on early big twin crankcases. Made of hardened steel for durability, this fixture enables the builder to do four modifications. | **53-0013** |

# TAPPET BLOCK ALIGNMENT TOOL

- Aligns tappet block so the tappet rollers run straight on the cam lobe to prevent camshaft wear



**S&S® TAPPET BLOCK ALIGNMENT TOOL**

| Description | Part # |
|---|---|
| Tool, Tappet Guide, Alignment | **530-0014** |

# S&S® OIL

## FEATURES AND BENEFITS

- Ultimate protection
- Superior lubrication for reduced engine wear and lower oil temperatures
- Provides consistent viscosity, and resists thermal breakdown and oxidation at elevated temperatures
- Includes a oil drain plug oring for convenience




### S&S® OIL CHANGE KIT—EVERYTHING YOU NEED FOR A COMPLETE OIL CHANGE!

| Description | Part # |
|---|---|
| Harley-Davidson® big twin & Sportster® Models with Evolution® engines *(using OEM filter #63796-77A,63806-83, 63805-80A)*<br>4 quarts of SAE 20W-50 Synthetic Engine Oil with chrome oil filter | **3601-0412** |
| Harley-Davidson® Twin Cam 88®/96™/103™/110™ engines *(using OEM filter #63798-99, 63731-99A)*<br>4 quarts of SAE 20W-50 Synthetic Engine Oil with chrome oil filter | **3601-0413** |
| 2017– 2019 Harley-Davidson® Models with Milwaukee-Eight® engine<br>5 quarts of SAE 20W-50 Synthetic Engine Oil with chrome oil filter | **3601-0492** |

### S&S® OIL

| Description | Part # |
|---|---|
| 20W50 Synthetic, 1 quart | **3601-0407** |
| 20W50 Synthetic, 2.5 Gallon | **3601-0408** |
| Primary, Synthetic, 1 quart | **3603-0044** |
| 80W140 Gear, Synthetic, 1 quart | **3604-0007** |
| Chain/Gear, Synthetic, 1 quart | **3604-0008** |

# OIL FILTERS

## FEATURES AND BENEFITS

- Captures smaller particles than stock filters
- Low restriction to oil flow
- Direct bypass—bypass oil does not pass over dirty filter media
- Smaller diameter for easier installation
- Black or chrome finish




### S&S® OIL FILTERS

| Year Application | Micron Rating | QTY | Chrome | Black |
|---|---|---|---|---|
| 1984–'99 Evolution®, 1986–'17 XL and 1991–'02 Buell® | 30µ | *each* | **31-4102A** *63796-77A* | **31-4101A** *63805-80A* |
| | | *12 pack* | **310-0240** | **310-0239** |
| 1999–'17* Twin Cam 88®/96™/103™ and all X-Wedge® | 10µ | *each* | **31-4104A** *63798-99A* | **31-4103A** *63731-99A* |
| | | *12 pack* | **310-0242** | **310-0241** |

**Contains an anti-drain back valve*

# CHAMPION® SPARK PLUGS



### CHAMPION® SPARK PLUGS

| Application | Size | QTY | Part # |
|---|---|---|---|
| Twin Cam 88®/96™/103™, Sportster®, X-Wedge® & S&S 4⅛" bore engines | 12mm Long Reach *Champion® #RA8HC* | *each* | **55-1320** *32317-86A, 32362-04* |
| | | *2 pack* | **55-1322** *32317-86A, 32362-04* |
| Evolution®, Vintage Models (SH-Series, Iron XL, KN-Series, P-Series) & S&S 3⅜" & 4" bore engines | 14mm Long Reach *Champion® #RN12YC* | *each* | **55-1321** *32342-04, 32311-83* |
| | | *2 pack* | **55-1323** *32342-04, 32311-83* |

# JETS & CARB REBUILD KITS
## FOR S&S SUPER E & G CARBURETORS

For those who need to rejet their carburetor because of engine modifications, exhaust modifications, or changes in altitude, we have extra jet kits available which are designed to cover most jetting situations.

### DEALER JET KITS±

| Description | Part # |
|---|---|
| S&S Carb Parts Kit *(Contains needed parts to maintain S&S Super E and G carburetors)* | **11-3103** |
| S&S Jet Kit *(Includes 3 each of all intermediate jets and 5 each of all main jets, plus a main jet tool)* | **11-3102** |

± ⚠ WARNING: Cancer and Reproductive Harm – www.P65Warnings.ca.gov




**11-3103±**

### JET PACKS±

| Description | Part # |
|---|---|
| Low Range Jet Pack — For jetting most stock and moderate performance engines | |
| *Includes one each intermediate jets (.025", .0265", .028", .0295") one each main jets (.062", .064", .066", .068", .070", .072", .074").* | **11-7270** |
| High Range Jet Pack — For jetting some stock and all performance engines | |
| *Includes one each intermediate jets (.0295", .031", .032", .033") and one each main jets (.072", .074", .076", .078", .080", .082", .084").* | **11-7271** |
| Master Jet Pack — For jetting all Super B, E, and G equipped engines | |
| *Includes one each intermediate jets (.025", .0265", .028", .0295", .031", .032", .033") and one each main jets (.062", .064", .066", .068", .070", .072", .074", .076", .078", .080", .082", .084").* | **11-7272** |

± ⚠ WARNING: Cancer and Reproductive Harm – www.P65Warnings.ca.gov




**11-3102±**



**11-7272±**

### INTERMEDIATE JETS — SERIES #94 INDIVIDUAL SELECTION±

| Size | QTY | Part # | Size | QTY | Part # |
|---|---|---|---|---|---|
| .025 | each | **11-0250** | .032 | each | **11-0320** |
| | 3 pack | **11-7107** | | 3 pack | **11-7112** |
| .0265 | each | **11-0265** | .033 | each | **11-0330** |
| | 3 pack | **11-7108** | | 3 pack | **11-7113** |
| .028 | each | **11-0280** | .036 | each | **11-0360** |
| | 3 pack | **11-7109** | | 3 pack | **11-7114** |
| .0295 | each | **11-0295** | .040 | each | **11-0400** |
| | 3 pack | **11-7110** | | 3 pack | **11-7115** |
| .031 | each | **11-0310** | Blank | each | **11-0000** |
| | 3 pack | **11-7111** | | | |

± ⚠ WARNING: Cancer and Reproductive Harm – www.P65Warnings.ca.gov



**106-3517±**

Early Series #94 gas jets were stamped with single digit numbers. Conversions for these numbers are:

1.....025"
2.....028"
3.....031"
4.....033"
5.....036"
6.....040"

***NOTE:*** No returns or exchanges on jets.

## MAIN JETS — SERIES #72 INDIVIDUAL SIZE SELECTION±

| Size | QTY | Part # | Size | QTY | Part # |
|---|---|---|---|---|---|
| .040 | each | 11-4040 | .080 | each | 11-4080 |
| | 5 pack | 11-7220 | | 5 pack | 11-7240 |
| .042 | each | 11-4042 | .082 | each | 11-4082 |
| | 5 pack | 11-7221 | | 5 pack | 11-7241 |
| .044 | each | 11-4044 | .084 | each | 11-4084 |
| | 5 pack | 11-7222 | | 5 pack | 11-7242 |
| .046 | each | 11-4046 | .086 | each | 11-4086 |
| | 5 pack | 11-7223 | | 5 pack | 11-7243 |
| .048 | each | 11-4048 | .088 | each | 11-4088 |
| | 5 pack | 11-7224 | | 5 pack | 11-7244 |
| .050 | each | 11-4050 | .090 | each | 11-4090 |
| | 5 pack | 11-7225 | | 5 pack | 11-7245 |
| .052 | each | 11-4052 | .092 | each | 11-4092 |
| | 5 pack | 11-7226 | | 5 pack | 11-7246 |
| .054 | each | 11-4054 | .094 | each | 11-4094 |
| | 5 pack | 11-7227 | | 5 pack | 11-7247 |
| .056 | each | 11-4056 | .096 | each | 11-4096 |
| | 5 pack | 11-7228 | | 5 pack | 11-7248 |
| .058 | each | 11-4058 | .098 | each | 11-4098 |
| | 5 pack | 11-7229 | | 5 pack | 11-7249 |
| .060 | each | 11-4060 | .100 | each | 11-4100 |
| | 5 pack | 11-7230 | | 5 pack | 11-7250 |
| .062 | each | 11-4062 | .102 | each | 11-4102 |
| | 5 pack | 11-7231 | | 5 pack | 11-7251 |
| .064 | each | 11-4064 | .104 | each | 11-4104 |
| | 5 pack | 11-7232 | | 5 pack | 11-7252 |
| .066 | each | 11-4066 | .106 | each | 11-4106 |
| | 5 pack | 11-7233 | | | |
| .070 | each | 11-4070 | .110 | each | 11-4110 |
| | 5 pack | 11-7235 | | 5 pack | 11-7255 |
| .072 | each | 11-4072 | .115 | each | 11-4115 |
| | 5 pack | 11-7236 | | 5 pack | 11-7256 |
| .074 | each | 11-4074 | .120 | each | 11-4120 |
| | 5 pack | 11-7237 | | 5 pack | 11-7257 |
| .076 | each | 11-4076 | | | |
| | 5 pack | 11-7238 | | | |
| .078 | each | 11-4078 | | | |
| | 5 pack | 11-7239 | | | |

± ⚠ WARNING: Cancer and Reproductive Harm – www.P65Warnings.ca.gov

## S&S® CARBURETOR REBUILD KITS

To insure that you continue to get the utmost in performance from your S&S carburetor, we have put together a series of rebuild kits that are designed to provide the proper parts to return a worn carburetor to top shape. We have assembled different types of kits to cover the different degrees of rebuild necessary.

## MASTER REBUILD KITS

Master rebuild kits contain a body rebuild kit, accelerator pump rebuild kit (Super E and G only), all new fasteners, springs, idle mixture screw, seat, and needle assembly. Everything needed to completely rebuild one carburetor.

### MASTER REBUILD KIT±

| Description | Part # |
|---|---|
| Super E | 11-2923 |
| Super G | 11-2924 |

± ⚠ WARNING: Cancer and Reproductive Harm – www.P65Warnings.ca.gov

## BODY REBUILD KITS

Body rebuild kits for Super E and G carbs also contain throttle shaft nuts, nylon washers, accelerator pump o-ring, and accelerator pump boot. Body rebuild kits for Super E and G carbs do not contain throttle shaft bushings since these carbs have stainless steel throttle shaft bushings already installed.

### BODY REBUILD KIT±

| Description | Part # |
|---|---|
| Super E | 11-2906 |
| Super G | 11-2907 |



± ⚠ WARNING: Cancer and Reproductive Harm – www.P65Warnings.ca.gov

## BASIC REBUILD KIT

A gasket and seal kit for low mileage Super E & G carbs. Perfect to reassemble carbs taken apart for inspection and cleaning.

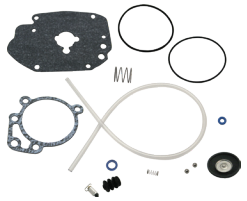

### BASIC REBUILD KIT±

| Description | Part # |
|---|---|
| Super E & G | 110-0067 |

± ⚠ WARNING: Cancer and Reproductive Harm – www.P65Warnings.ca.gov

## ACCELERATOR PUMP REBUILD KITS

Accelerator pump rebuild kits contain diaphragm, diaphragm spring, check balls, check ball spring, pump pushrod, and required hardware and o-rings.

### ACCELERATOR PUMP REBUILD KIT

| Description | Part # |
|---|---|
| Super E & G | 11-2918 |

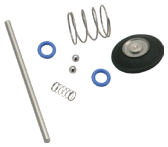

## FUEL LINE KIT

Fuel Line Kit for Super E and G Carburetors p/n 190-0005±

### FUEL LINE KIT

| Description | Part # |
|---|---|
| Fuel Line, Kit, Carb, Super E/G, Swivel Retrofit | 190-0005± |
| Fuel Line,.311" x .563" x 17.5",SAE 30R14 *(replacement fuel line only)* | 190-0001 |

± ⚠ WARNING: Cancer and Reproductive Harm – www.P65Warnings.ca.gov



190-0005±

# TOUCH UP PAINT, LUBRICANT AND SEALANTS



106-3023



51-9000



51-9009



51-9002



500-0143

## TOUCH UP PAINT

| Description | Part # |
|---|---|
| S&S touch up paint is included with each powdercoated S&S engine, but it's handy to have a spare! Keep one in the shop and one in your saddle bag. Sold in ½ oz. bottles with applicator cap. | |
| Wrinkle Black ½ oz, matte finish (used after April 2009)* | **510-0053** |
| Silver ½ oz | **106-3023** |
| Stone Gray ½ oz | **510-0350** |
| **NOTE: Wrinkle Black (51-9001) has a slightly glossy finish. Wrinkle Black (510-0053) has a matte finish with no gloss.* | |

## LUBRICANT AND SEALANTS

Use what the pros use! S&S assembles a lot of engines and customers often ask what sealants and lubricants we use. We recommend and use the following:

| | |
|---|---|
| **Torco® Engine Assembly Lube** | |
| Protect engine components during assembly and initial start up! | |
| 4 oz. Bottle | **51-9000** |
| 1 oz. Tube | **51-9002** |
| **Gasgacinch® Gasket Sealer** | |
| 4 oz. (118ml) Can | **51-9009** |
| **ThreeBond® Liquid Gasket 1194** | |
| Great for sealing crankcases!<br>3.5 oz. (100g) Tube | **500-0143** |

# ENGINE STANDS

- An economical way to hold an engine on the work bench, for shipping, or for display
- Constructed of heavy gauge stamped steel with "S&S" laser cut in both ends
- Bullet proof, blue powder coat finish gives the stands a professional appearance that is suitable for display and protects them from corrosion and minor abrasions



## S&S® ENGINE STANDS

| Application | Part # |
|---|---|
| S&S X-Wedge® Engines | **53-0147** |
| 1936–'99 Big Twin Engines | **53-0141** |
| 1999–Up Unbalanced Big Twin Engines | **53-0143** |
| 1999–'06 Balanced Big Twin Engines | **53-0145** |

# DEALER SERVICE KIT FOR STREET LEGAL EXHAUST



**DEALER SERVICE KIT** ..... **510-0684** .....*$28.67*

(Includes S&S proprietary tamper-proof bit ***(available only to dealers)*** and spare fasteners. Provides everything necessary to perform any required service or end cap replacement.)

# WARRANTY & COMPANY POLICY




LIMITED WARRANTY .....222

MAP POLICY.....219

ORDERING AND RETURNS.....220

S&S VIDEO USAGE POLICY.....224

WARRANTY SERVICE .....221

# S&S® CYCLE, INC.

**14025 CTY HWY G, VIOLA, WI 54664**
**608-627-1497**
**SSCUST@SSCYCLE.COM**
**SSCYCLE.COM**

**PUT YOUR CUSTOMER NUMBER HERE:**

## DISCLAIMER

The names Harley®, Harley-Davidson®, H-D® and all trademarks owned by Harley-Davidson and its affiliated companies, and all H-D and Buell® part numbers and model designations are used for reference only. S&S Cycle is in no way associated with or authorized by Harley-Davidson Motor Co. to manufacture and sell any of the engine parts described in this catalog.

The installation of any S&S part may void or otherwise adversely affect your factory warranty. In addition, such installation and use may violate certain federal, state and local laws, rules and ordinances as well as other laws when used on motor vehicles operated on public highways, especially in states where pollution laws may apply.

Always check federal, state, and local laws before modifying your motorcycle.

It is the sole and exclusive responsibility of the user to determine the suitability of the product for his or her use, and the user shall assume all legal, personal injury risk, and liability and all other obligations, duties and risks associated therewith. S&S parts are intended for the very experienced off-road rider only.

## SALES

S&S parts are obtainable from many distributors and dealerships throughout the world. Please reference our Dealer Locator on the S&S website for an authorized Dealer near you.

In order to receive dealer prices, new customers must complete a Dealer Application through the S&S Customer Support Department.

In order to receive distributor prices, new customers must provide, in addition to all of the dealer requirements listed above, a copy of your dealer catalog and dealer price list for consideration. It is left to S&S' sole discretion as to whom it allows to distribute S&S products.

***NOTE:*** **Distributors are authorized to sell to dealers only. Retail sales are prohibited.**

## TERMS

S&S accepts Visa, MasterCard, and American Express

New Dealers and Distributors: For a period of six months following the acceptance of a completed Customer Application form, component orders for all new S&S customers shipped in the continental United States and abroad will be sent prepaid.

Existing Dealers and Distributors: After six months as an S&S customer, dealers and distributors with a satisfactory payment and performance history may request an open account status from their Customer Support representative.

International: Any orders from outside the United States must be prepaid in United States funds. Freight charges may be prepaid by the customer or order may be shipped freight collect.

Telephone orders will be handled according to customer terms.

Individuals: S&S recommends that parts are purchased through a dealer; However, S&S will ship parts order to a retail customer if desired.

Service Charges: S&S reserves the right to levy additional charges under the following circumstances:

Insufficient Funds: Any customer that has a check returned to S&S for lack of funds will be charged $35.00 and will be immediately placed on pre-paid status.

Past Due: Any account that is 30 days past due will be assessed a charge of 1.5% on the balance due for each month the account is in arrears. The account will be put on hold until all past due amount is paid. Customer will then be put on prepaid and can reapply for terms.

Duplicate Manufacturer's Statement of Origin (MSO): Any customer requesting a duplicate MSO will be charged $60.00 for each separate MSO required. Please be aware that a sworn affidavit must be completed and submitted to S&S before the duplicate MSO can be prepared.

# MINIMUM ADVERTISED PRICE (MAP) POLICY

S&S Cycle will issue printed price lists indicating Manufacturer's Suggested Retail Pricing (MSRP) and maintain a current listing with effective date of MSRP on its internet website which can be amended at any time by S&S Cycle at its sole discretion. Any priced advertisement in any media such as but not limited to internet or similar electronic media, radio, television, flyers, posters, catalogs, mail order catalogs, magazines, e-mail newsletters, e-mail solicitations, coupons, mailers, inserts, newspapers, and public signage must be not less than 10% below the current MSRP as indicated on the printed price list or S&S website. Any pricing advertised that is greater than 10% below that shown on the current printed price list or MSRP list on the S&S Cycle website will be a violation of this MAP policy and subject to enforcement procedures as identified later in this document.

Sales of any S&S products listed on the current price list through third party retailing (such as eBay and Amazon) is allowed providing the listed price is less than 10% below MSRP.

This MAP Policy applies only to advertised prices and does not apply to the actual price that S&S Cycle products are sold or offered for sale to an individual consumer within Reseller's location or over the telephone. Resellers are free to sell S&S Cycle products at any price they choose under these circumstances.

The inclusion in advertising of any free or discounted products with a product covered by this MAP Policy would be contrary to this MAP Policy if it has the effect of discounting the advertised price of the included S&S Cycle product below current MSRP as indicated on the S&S Cycle internet website or printed price list.

This MAP Policy does not establish maximum advertised prices. Resellers may offer S&S Cycle products at any price in excess of current MSRP.

Pricing listed on an internet site is considered an "advertised price" and must adhere to this MAP Policy. Once the pricing is associated with an intent to purchase (adding to shopping cart or order), the price becomes the selling price and is not bound by this MAP Policy. Statements such as "add to basket to see price," "we will match any price," "call for price" or similar phrases are acceptable as long as the price advertised or listed for the products is less than 10% below current MSRP. In addition, discounts applied at checkout to the customer's entire order based on customers purchasing history with the Reseller, such as discounts for "frequent shoppers," do not violate this MAP Policy.

S&S Cycle reserves the right to offer promotions on certain products. In such an event, we reserve the right to modify or suspend this MAP Policy in whole or in part by notifying all Resellers of the nature and duration of the change. S&S Cycle further reserves the right to adjust the MSRP with respect to all or certain products at its sole discretion. Such changes shall apply equally to all resellers.

## ENFORCEMENT PROCEDURES:

S&S has included its MAP Policy Enforcement Procedures in the Dealer Agreement to ensure all dealers signing the "acknowledgement" page are aware of the severity in which S&S will deal with violators of this policy. Any determinations by S&S under these enforcement procedures shall be binding upon the violator.

## FIRST OFFENSE:

Dealer will receive notification of the nature of the violation and will be given thirty (30) calendar days to remove the offending print advertisements from publication and distribution and three (3) business days to remove any offending electronic advertisements from web pages, internet sites, or other electronic media.

## SECOND OFFENSE:

Dealer will receive a notification and the account will be placed on a non-ship basis for thirty (30) days from the date of notice.

## THIRD OFFENSE:

Dealer will receive a notification and the account will be placed on a non-ship basis for sixty (60) days from the date of notice.

## FOURTH OFFENSE:

Dealer will receive a notification and the account will be placed on a non-ship basis indefinitely.

The administration of this MAP Policy and any determinations made under it are solely within S&S Cycle's discretion and authority. All questions about this MAP Policy should be in writing and directed via U.S. Mail to the Vice President of Marketing, S&S Cycle Inc, 14025 County Highway G, Viola WI 54664. This policy is subject to change at S&S' sole discretion.

# ORDERING AND RETURN POLICY

## ORDERING

Orders may be placed online or by telephone or email. Special forms for written orders are not necessary. Special order parts will require payment in full by credit card or wire transfer before the order is placed, and in most cases a special order form is also required. S&S® requires specific information when ordering parts. Refer to the appropriate section of the catalog that contains the parts you want to order for the required information.

## HOW TO ORDER

Written orders should be mailed to:

S&S Cycle, Inc.
Customer Support Representative
14025 Cty. Hwy. G
Viola, WI 54664

Fax orders should be sent to: 608-627-1488

Email orders should be sent to your Customer Support Representative.

When placing an order by letter, fax, or email, please include the following information:

1. First and Last Name
2. Customer Number
3. Company Name
4. Street Address, City, State, and Zip Code
   *(UPS will not deliver to a post office box.)*
5. Phone Number where you can be reached between 8:00A.M. and 5:00P.M. Central Standard Time.
6. Shipping Preference. Customer must specify the method of shipment e.g. UPS one-day air, UPS two-day air, UPS ground, Federal Express, Truck, or U.S. Mail
   NOTE: S&S ships most domestic and international orders via UPS
7. Year and model of motorcycle for each kit ordered
8. Information that is helpful in establishing the correct S&S part has been ordered. Examples of information to include are: engine displacement, bore and stroke, cylinder height, and existing modifications to the motor
9. S&S part number and quantities required
   NOTE: The customer is responsible for determining & ordering the appropriate part number
10. Deposit applies only to individual customers or orders for special parts

## HOW TO ORDER BY PHONE

When placing an order by phone please provide the information below:

1. Customer Number
2. Name of person placing the order
3. Company Name
4. Street Address, City, State, and Zip Code. For dealers and distributors, S&S Customer Support Representative will verify current address against our computer listing each time an order is placed
5. Shipping Preference. Customer will be asked to determine the method of shipment e.g. UPS one-day air, UPS two-day air, UPS ground, Federal Express, Truck, or U.S. Mail

NOTE: S&S ships most domestic and international orders via UPS

6. S&S part numbers and quantities required. NOTE: The customer is responsible for determining and ordering the appropriate part number
7. Information that is helpful in establishing the correct S&S part has been ordered. Examples of information to have available include: engine displacement, bore and stroke, cylinder height, and existing motor modifications

## BACKORDERS

Through continual expansion of equipment and facilities, S&S is making an ongoing effort to improve parts availability, however, backorders cannot always be avoided.

Items not in stock at the time the initial order is shipped will be backordered.

During the backorder period if the customer decides the parts are no longer needed, it is the customer's responsibility to notify S&S that the order should be cancelled.

Shipping charges and restocking fees will be applied to any backorders that are refused in the same way they are applied to other orders that are refused.

## REFUSED SHIPMENTS

Orders that are refused or returned to S&S® for reasons such as insufficient funds or having no one available when the shipment is delivered are subject to a 20% restocking fee plus any shipping. The customer will then be put on Pre-Pay status and remain there for a minimum of 6 months.

## SPECIAL ORDERS

All special order parts must be paid for in-full when the order is placed. In addition, the customer must complete special order sheet and sign a copy of the sales order to verify that the specifications are correct. The order may not be cancelled. Special order parts are not returnable. *NOTE: Distributors of S&S Cycle, Inc. are not authorized to order Special Order items as this is a Race and Dealer only program.

## RETURNS

Shipments must be inspected by the customer immediately upon receipt to insure they are complete and undamaged. If damaged parts are discovered, an immediate claim must be made with the carrier. S&S must be notified within five (5) working days of the receipt of a shipment that has been determined to have shortages or contain incorrect or defective parts. It is advisable to phone S&S as soon as possible as issues can frequently be resolved more quickly over the phone.

The following requirements must be satisfied to receive credit, a refund, or to exchange merchandise.

1. Call S&S to obtain a Return Authorization (RA) number before the parts are returned. The RA number must be visible and clearly written on the container.
2. Return the parts to S&S within 10 days.
3. Package the parts to prevent any damage occurring during shipping. If parts being returned to S&S are damaged in transit because of inadequate packaging, they will be returned to the customer at the customer's expense. Repackaging parts using S&S containers does not always ensure the items are packaged properly. S&S original containers may be reused but good judgment must be applied to determine if additional protection is required.
4. All returns must be sent to S&S insured and prepaid. No CODs will be accepted.
5. All returns must be accompanied by a copy of the original invoice of purchase and a note explaining in sufficient detail the reason for the return. The Return Authorization number must be visible and clearly written on the container and the explanatory note.
6. Under no circumstances are damaged, altered, rusty, used or otherwise un-saleable parts eligible to be returned for credit. S&S will not issue an RA number for anything altered, used, unpackaged or deemed obsolete by S&S.

Upon acceptance of the returned parts by S&S under the requirements described above, the customer will be charged a minimum restocking fee equal to 20% of the total value of the parts.

### ALL RETURNS MUST BE SHIPPED TO:

S&S® Cycle Inc.
14025 Cty Hwy G
Viola, Wisconsin 54664

## SHIPPING

Domestic: S&S will ship most orders via UPS ground and will do so unless the customer requests another method. S&S will not ship by bus line but will ship via Federal Express or Truck at the customer's request.

Pre-Paid Shipping: Pre-payment of shipping charges by dealer allows them to receive S&S shipping rates, resulting in significant savings.

International: Due to high shipping and customs costs, it is recommended that international customers advise S&S of the carrier to be used, especially for a large order.

Orders that must be received quickly can be shipped by UPS-Waybill (three to four-day service) or UPS-Expedite (five to six-day service).

# OBTAINING WARRANTY SERVICE

## WHAT ARE THE PROCEDURES TO OBTAIN SERVICE UNDER THIS WARRANTY?

To obtain service under this warranty, the original Consumer Purchaser should immediately contact the dealer where the Engine was purchased. The dealer will then contact S&S® Cycle, Incorporated (the "Company") for a determination as to whether the defect in the Engine or part is covered by this warranty.

THE DEALER OR SERVICE PROVIDER MUST RECEIVE AUTHORIZATION FROM THE COMPANY BEFORE PROVIDING SERVICE UNDER THIS WARRANTY.

In the event that the Company determines the Engine or part must be returned to the Company for evaluation or service, the Company will provide the dealer with a Return Authorization Number to put on the shipping container for identification.

The original Consumer Purchaser or dealer must clean and properly package the Engine or part so as not to cause further damage and return the Engine or part, shipping costs prepaid, to the Company. The Return Authorization Number must be clearly visible on the outside of the shipping container. If the Engine or part must be cleaned prior to warranty inspection the cost of cleaning will be charged to the original Consumer Purchaser or dealer.

The original Consumer Purchaser or dealer must also send to the Company a detailed explanation of the relevant facts concerning the nature of the problem, the specific use of the Engine, and the circumstances giving rise to the defect or problem.

If it is not practicable to contact the dealer for warranty service, the original Consumer Purchaser may contact the Company at the following address, telephone number, fax number or e-mail address:

S&S® Cycle, Incorporated
Attention: Customer Support
14025 Cty Hwy G
Viola, Wisconsin 54664
Phone: 608-627-1497 Email: sstech@sscycle.com

## HOW DO STATE LAWS RELATE TO THIS WARRANTY?

This warranty gives you specific legal rights. You may also have other rights that vary from state to state.

## ARE THERE OTHER WARRANTIES?

THE WARRANTIES STATED IN THIS WARRANTY REPLACE ALL OTHER WARRANTIES, EXPRESS OR IMPLIED, INCLUDING WITHOUT LIMITATION, THOSE OF MERCHANTABILITY AND FITNESS FOR A PARTICULAR PURPOSE, AND ANY OTHER OBLIGATIONS OR LIABILITIES ON THE PART OF THE COMPANY WHETHER IN CONTRACT, WARRANTY, NEGLIGENCE OR OTHERWISE, TO THE EXTENT NOT PROHIBITED BY LAW.

Some states do not allow limitations on how long an implied warranty lasts, so the above limitation may not apply to you.

## WHAT MUST THE ORIGINAL CONSUMER PURCHASER DO TO QUALIFY FOR WARRANTY COVERAGE?

Within thirty (30) days after the date of purchase of the Engine, the selling Dealer or Consumer Purchaser must return the completed Warranty Registration Form (included with the engine shipment), along with a copy of the invoice, evidencing such purchase to the Company. Upon receipt of the Owner's Warranty Card Registration Form by the Company, the MSO will be sent to the selling Dealer by the Company. The selling Dealer is responsible for forwarding the original MSO to the Consumer Purchaser. The Owner's Warranty Card will be sent by The Company to the Consumer Purchaser based on the information completed by the Selling Dealer within the returned Owner's Warranty Card Registration Form. The Owner's Warranty Card Registration Form should be returned to the Company at the following address by the selling Dealer:

S&S® Cycle, Incorporated
Attention: Customer Support
14025 Cty Hwy G
Viola, Wisconsin 54664
Phone: 608-627-1497 Email: sstech@sscycle.com

THIS WARRANTY IS VOIDABLE AT THE COMPANY'S OPTION IF THE ORIGINAL SELLING DEALER DOES NOT RETURN TO THE COMPANY THE WARRANTY REGISTRATION FORM AND A COPY OF THE INVOICE WITHIN THIRTY (30) DAYS FROM THE DATE OF PURCHASE OF THE ENGINE.

# LIMITED WARRANTY
# FOR COMPLETE FACTORY-ASSEMBLED ENGINES

## LIMITED WARRANTY

S&S Cycle, Inc. (the "Company") warrants to the original purchaser that each new product manufactured and assembled by the Company will be free, under normal use and maintenance, from significant manufacturing defects in materials and workmanship for two (2) years (KN and T143 Engines one (1) year limited warranty. SB100 engines are one (1) year parts only), subject to the following exceptions, exclusions, obligations, and limitations. All warranty periods shall begin from the date of purchase by the original retail customer or one year from date of manufacture, whichever comes first.

Exceptions/Exclusions

The foregoing limited warranty is not assignable or transferrable and shall not apply: (1) to any engine, part, or component that is used for other than the intended commercial purpose (including, without limitation, any racing or similar competitive activities or where competition applications, such as a turbocharger, supercharger, or nitrous oxide is used with the engine); (2) where the engine, part, or component has been subject to misuse, negligent use or maintenance, improper storage or shipping, old or contaminated fuel left within the fuel systems, operation without adequate cooling or lubricants, or a failure to operate or maintain in accordance with the specifications published by the Company; (3) where the engine, part, or component has been involved in an accident, or has been altered in any way which, in the sole judgment of the Company, adversely affects performance, safety, structural integrity, or reliability; (4) to any engine, part, or component manufactured or furnished by a third party; (5) where any engine, part, or component is (i) assembled by the Company in accordance with the purchaser's specifications or (ii) used in conjunction with or otherwise attached to a part or component manufactured by a third party and with respect to which the Company has not pre-tested and approved the structural integrity, application, and use of such fully-assembled product; (6) to defects or damage caused by the user failing to cease operation of the engine, part, or component as soon as the defect is identified or suspected, or where the engine, part, or component has been used in vehicles for demonstration or development purposes; or (7) to normal wear and tear or to parts or components consumed/expended in the normal operation of the engine (including, without limitation, oil, fuel, spark plugs, lubricants, oil filters, air filters, or fuel filters). This limited warranty shall not apply to any defects in the engine, part, or components powder coat or chrome finish, when that option is selected, if the defects arise from or are caused by negligence of parties other than the Company, an accident, ordinary wear and tear, assembly or disassembly, power washing, natural occurrences (such as stone chips or salt and other substances used on streets and highways), bead blasting, improper maintenance including the use of any harsh cleaning agent, chemical solvent, or solvent. This limited warranty does not cover inconvenience or loss of use of the engine, part, or component, routine maintenance services or adjustments, or the cost of labor to remove, install, or service the engine, part, or component or any part contained therein. This limited warranty covers engine, part, or component and/or workmanship issues only, and not the equipment to which the engine, part, or component may be mounted or attached.

## REMEDIES

As to valid warranty claims against the Company, the original purchaser's sole and exclusive remedy, and the Company's sole and exclusive obligation under this limited warranty, shall be, at the Company's option, replacement or repair of such defective engine, part, or component. The original purchaser shall notify the Company within ten (10) days after discovery of the alleged defect specifying in detail the nature of the defect. Failure to provide written notice within the ten (10) day period shall constitute a waiver of such warranty claim. Where warranty rights are claimed, all goods claimed to be defective shall be delivered to the Company with transportation charges prepaid, and the original purchaser's copy of the original invoice must be provided to the Company as evidence of the date of purchase.

## DISCLAIMER/LIMITATION OF LIABILITY

EXCEPT AS SPECIFICALLY SET FORTH ABOVE, NO EXPRESS WARRANTY IS GIVEN BY THE COMPANY WITH RESPECT TO ANY ENGINES, PARTS, OR COMPONENTS. ANY WARRANTY IMPLIED BY LAW, INCLUDING ANY WARRANTY OF MERCHANTABILITY OR FITNESS FOR A PARTICULAR PURPOSE, IS EXPRESSLY LIMITED TO THE DURATION OF THE LIMITED WARRANTY SET FORTH ABOVE. THE COMPANY MAKES NO OTHER EXPRESS WARRANTY. THE COMPANY SHALL NOT BE LIABLE FOR ANY SPECIAL, INDIRECT, INCIDENTAL, OR CONSEQUENTIAL DAMAGES OF ANY KIND OR NATURE.

Some states and countries do not allow limitations on how long an implied warranty lasts, or the exclusion or limitation of incidental or consequential damages, so the above limitation or exclusion may not apply to you, and you may have other rights which vary from state to state.

# LIMITED WARRANTY STANDARD PARTS

## WHO IS COVERED BY THIS WARRANTY?

This warranty covers only the original Consumer Purchaser of these parts and is not transferable.

## WHAT DOES THIS WARRANTY COVER?

S&S® Cycle, Incorporated (the "Company") warrants these parts to be free from defects in material and workmanship. If the parts become defective during the warranty coverage period, the Company will, at its option, repair or replace any, or all, defective parts. Repair or replacement of defective parts is the sole and exclusive remedy.

## HOW LONG IS THE WARRANTY COVERAGE?

With the exception of electrical and electronic components, the warranty coverage remains in force for a period of twelve (12) months from the date that the original Consumer Purchaser buys the parts. Electrical and electronic components are covered by a warranty duration of six (6) months. However, warranty coverage will automatically terminate if the original Purchaser sells or otherwise transfers all or any portion of the purchased parts.

## WHAT IS NOT COVERED BY THIS WARRANTY?

The Company shall not pay or be responsible for the cost of shipping the defective parts to the Company for service under this warranty, nor will the Company pay for the cost of labor to remove and/or replace the defective parts.

Moreover, the Company shall have no obligation under this warranty in the event that the parts become defective in whole or in part as a result of improper assembly, installation, break-in, maintenance, or use, or any other misuse or mistreatment of the parts, including, without limitation, operation of the parts with fuels, oils or lubricants not conforming to specifications published by the Company or continued operation of the parts after a defect or malfunction occurs or is identified or suspected.

The Company shall have no obligation under this warranty for defects in parts with a powdercoat finish, when that option is selected, if the defects are caused by, but not limited to, negligence of parties other than the Company; an accident; ordinary wear and tear; assembly or disassembly; power washing; natural occurrences like stone chips; bead blasting; improper maintenance including the use of any harsh cleaning agent, chemical or solvent; and salt or other substances used on streets and highways for maintenance and safety.

The Company provides touch-up paint with powdercoated parts. It is the customer's responsibility to repair minor finish damage to prevent or inhibit further deterioration.

It is the responsibility of the original Consumer Purchaser to cease operation as soon as a defect or malfunction is identified or suspected. The failure to cease operation once a defect or malfunction exists can cause substantial damage to the Company's parts that could otherwise be avoided.

In addition, the Company shall have no obligation under this warranty for parts defects caused by alteration including, but not limited to, polishing; powdercoating; painting; removing or reconfiguring any components; modification, repair, or unauthorized service.

The Company shall have no obligation under this warranty if the parts are used in racing or similar competitive activities. The Company shall have no obligation under this warranty when a competition application, including but not limited to a turbocharger, supercharger or nitrous oxide, is used with the Engine. Further, the Company shall have no obligation under this warranty for any parts that are included in a Competition Package Option offered by the Company since the Package is for use in racing and similar competitive activities.

THE COMPANY SHALL NOT BE LIABLE FOR AND DISCLAIMS ALL CONSEQUENTIAL, INCIDENTAL, PUNITIVE OR SPECIAL DAMAGES ARISING OUT OF THE USE OF, OR INABILITY TO USE, THESE PARTS.

Some states do not allow the exclusion or limitation of incidental or consequential damages, so the above exclusion may not apply to you.

# VIDEO USAGE POLICY

## OVERVIEW

S&S owns all copyright and other intellectual property rights in the videos it produces or distributes. However, S&S customers are welcome to use and share S&S videos within these guidelines provided.

## PERMISSIBLE USES

- Videos may only be used for non-commercial purposes or to promote the use or sale of S&S products.
- Videos may be embedded in external websites using video hosting service supplied embed (iframe) code.
- Videos can be added to a customer video hosting service account via playlists while still maintaining original exclusivity of uploaded videos by S&S.
- Reposting or uploading of S&S content is only permissible with written consent from S&S Cycle.
    - If consent is granted to repost/re-upload S&S content, customers may add annotations using functionality provided by video hosting services. This may include the customer's contact and ordering information which would be subject to approval by S&S to ensure branding is intact, prior to making it public. The video itself must remain unaltered.
    - S&S requires that at the beginning of each month, a report of view statistics per video be supplied to S&S.
- Links (url) to S&S YouTube channel or individual YouTube videos may be provided and shared by the customer via email, blog, website, social networks, or printed material.

## NON PERMISSIBLE USES

- Customers may not upload or repost any copyrighted materials owned by S&S to another video hosting service account or any website without written consent from S&S.
- Customers may not alter or modify any copyrighted materials owned by S&S.
- Videos may not be used in any way that is likely to disparage, dilute, tarnish, or otherwise harm the S&S brand.

## TERMINATION OF LICENSE

Through this Video Usage Policy, S&S is granting its customers a limited, revocable license to display or link to its videos. S&S may, at any time, and at its sole discretion, terminate this license, at which point any copying or display of its videos will be prohibited, unless otherwise specified in writing.

# APPENDIX & INDEX




APPENDIX
IDENTIFICATION OF FLYWHEELS .....226
ORDERING S&S MANIFOLDS.....227
YEAR CODES..... 228
CUSTOM HEAD BOLT LENGTH..... 229
INDEX..... 230

# IDENTIFICATION OF FLYWHEELS

S&S® flywheels are manufactured in sets only. We do not sell individual right or left flywheels, nor do we recommend mixing flywheels. This is because the manufacturing techniques and/or tooling changes periodically.
To prevent mixing flywheels, as well as to identify each set, the right and left flywheels are stamped with identical serial numbers (see picture).

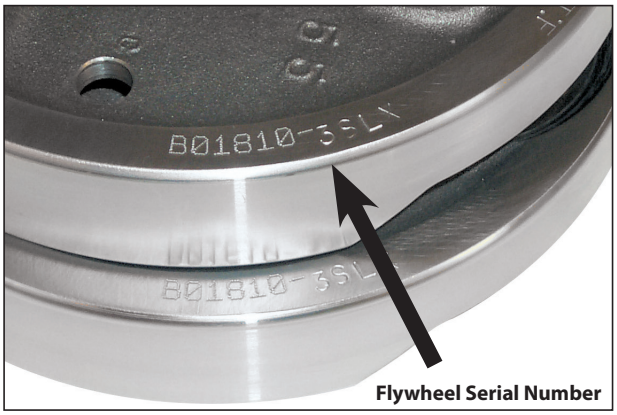


## SERIAL NUMBER IDENTIFICATION INFORMATION

Serial Number ID, B01810-3SLX , deciphered as follows:

**(B01810)** Serial Number: From this number, S&S can determine when the flywheels were made and sold, to whom they were sold, and how the flywheels were originally balanced

**(3)** Stroke Code: Determines the stroke of the flywheels In this case the stroke is 4¾"

**(SL)** Year Code: The year of the engine the flywheels were machined to fit and that the flywheels were machined to accept an S&S design sprocket shaft

**(X)** Diameter Code: Diameter of the flywheels In this case the diameter is 8¼"

## S&S® FLYWHEEL IDENTIFICATION CODES FOR 1936–UP BIG TWIN

| Stroke Code | Stroke | Year Code | Engine Year | Sprocket Shaft | Pinion Shaft | Crankpin Type | Diameter Code | Flywheel Diameter |
|---|---|---|---|---|---|---|---|---|
| 1 | 4⅜" | E | 1936–'54 | Stock | Stock | 1941–'81 | None | 8½" (Stock) |
| 2 | 4½" | L | 1955–'71 | Stock | Stock | 1941–'81 | A | 8⅜" |
| 3 | 4¾" | AL | 1972–Early '81 | Stock | Stock | 1941–'81 | X | 8¼" |
| 4 | 5" | SE | 1955–Early '81 | S&S | Stock | 1941–'81 | | |
| 5 | 4¼" (Stock 80") | BL | Late 1981–'99 | Stock | Stock | 1981–'99 | | |
| 6 | 4⅝" | SL | Late 1981–'99 | S&S | Stock | 1981–'99 | | |
| 9 | Special order | SF | 1999–up | Press In | Press In | Press In | | |
| 12 | 5¼" | SG | S&S 4⅛" Bore | Press In | Press In | Press In | | |
| 13 | 3½" (Stock 61") | SM | 1995–'99 EFI | Press In | S&S | 1981–'99 | | |
| 14 | 3 31/32" (Stock 74") | Y | 74"/80" Indian® | Stock | Stock | Stock | | |
| 16 | 5⅛" | | | | | | | |
| 17 | 4" | | | | | | | |
| 18 | 3⅝" | | | | | | | |
| 19 | 4⅛" | | | | | | | |
| TA | 3⅞" | Titan Special | | | | | | |
| TB | 4450" | | | | | | | |

## FLYWHEEL CODES:

Codes that pertain to the most common regular production flywheels have been listed. Many other codes for racing flywheels and special orders also exist. If you have a question about a set of S&S flywheels with codes different than those shown, contact an S&S technical assistant to properly identify what you have.

Flywheel ID codes that end with an "A" or an "X" designate flywheels with a smaller than stock diameter. Stock big twin flywheels measure 8½", and stock flywheels for Harley-Davidson® Sportster® models are 7⅞" in diameter. Typically, "A" means ⅛" smaller, and "X" means ¼" smaller. To verify the code, it is best to measure the flywheels

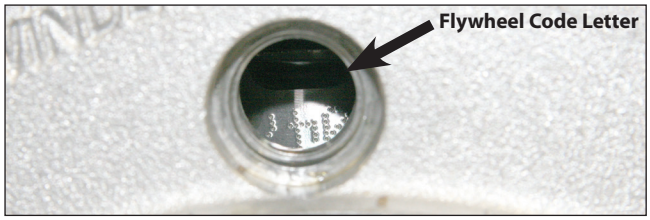


*Serial numbers can be seen through the timing hole to identify the stroke of an assembled engine Keep in mind they will appear upside down in the hole*

## S&S® FLYWHEEL IDENTIFICATION CODES FOR HARLEY-DAVIDSON® SPORTSTER® & BUELL® MODELS

| Stroke Code | Stroke | Year Code | Engine Year | Sprocket Shaft | Pinion Shaft | Crankpin Type | Rod Bearing Type | Diameter Code | Flywheel Diameter |
|---|---|---|---|---|---|---|---|---|---|
| 1 | 4 1/16" | None | 1957–'76 | Stock | Stock | Stock | Stock | None | 7⅞" (Stock) |
| 2 | 4 3/16" | B | 1957–Early '81 | Stock | Stock | Stock | Stock | A | 7¾" |
| 3 | 4 5/16" | SB | 1957–Early '81 | S&S | Stock | Stock | Stock | X | 7⅝" |
| 4 | 4 7/16" | BD | 1957–Early '81 | Stock | | Stock | Stock | | |
| 6 | 4⅝" | SBD | 1977–Early '81 | S&S | | Stock | Stock | | |
| 7 | 4 13/16" | C* | Late 1981–'85 | Stock | Stock | Stock | Stock | | |
| 8 | 5" | SC | Late 1981–'85 | S&S | Stock | Stock | Stock | | |
| 9 | Special Order | SCD | Late 1981–'85 | S&S | | Stock | Stock | | |
| 11 | 4½" | SCR | Late 1981–'85 | S&S | Stock | Stock | 1987–Up | | |
| 12 | 5¼" | SCDR | Late 1981–'85 | S&S | | Stock | 1987–Up | | |
| 15 | 3 13/16" | D | Late 1986–'03 | S&S | S&S | S&S | S&S | | |
| 16 | 5⅛" | DR | Late 1986–'03 | S&S | S&S | S&S | 1987–Up | | |
| 17 | 4" | PS | S&S Prostock | Press In | Press In | Press In | | | |
| 18 | 3⅜" | KRS | 45" WR/KR | Stock | Stock | 1957–'81 XL | 1957–'81 XL | | |
| 19 | 4⅛" | YS | 45" Indian | Stock | Stock | Stock | Stock | | |

** Obsolete – S&S no longer makes this design*

# ORDERING S&S® MANIFOLDS

We make one style of manifolds for both Harley-Davidson® Evolution® and Twin Cam 88® engines to fit stock cylinder heads and S&S cylinder heads—meaning manifolds supplied in S&S carburetor kits can be used with stock or S&S Super Stock® cylinder heads. The only thing that you have to keep in mind is that due to the slightly larger port diameter, these manifolds must be used with S&S manifold seals.

## REPLACEMENT & SPECIAL ORDER INTAKE MANIFOLDS

Stock, S&S Engine or S&S Kit: To order a replacement manifold, refer to the manifold size chart for your particular engine type. Manifolds are listed for various sized carburetors and throttle bodies in the correct lengths for engines and kits offered by S&S .

Custom Engine: If the effective cylinder length is different from the standard offerings, a special manifold can be machined to your specifications. Order manifolds using the special order part numbers listed in the charts. Allow two weeks for delivery

## SPECIFYING MANIFOLD LENGTH

When ordering a special manifold, specify the length of the manifold required for your application. There are several methods to specify the length of a manifold:

## PORT-TO-PORT DISTANCE: S&S MANIFOLD MEASURING TOOLS

The most accurate method for specifying length for a special order manifold:

- Use the S&S Manifold Measuring Tools to measure port-center to port-center distance on an engine or an existing manifold.
- Specify whether the measurement was from an engine or from an existing manifold. (Manifold measurements will be approximately 030" shorter than engine measurements due to clearance normally built into the manifold).

## PORT-TO-PORT DISTANCE: FLANGE METHOD

Another accurate method of specifying manifold length for special order is to measure the port-to-port distance on an assembled or mock-up engine :

- Assemble or mock-up the engine & install the intake flanges on heads
- Scribe a circle around the port using the mounting flange as a template The circle must be the same size as the ID of the flange. (It is recommended that front flange be installed upside down on the rear head and vice versa, to avoid inaccuracy in the circle diameter).
- Remove the flanges and measure the shortest distance between the scribed circles See Diagram 1

## EFFECTIVE CYLINDER LENGTH

Ordering a special manifold by effective cylinder length is commonly used since it does not require any special tools, however, this method will not account for machining inaccuracy in the cases or heads .

- Measure the cylinder length from gasket-surface to gasket-surface without the head and base gaskets in place. (A precision measuring instrument, such as a dial caliper, should be used to insure accurate results).
- If all components except the cylinder are stock, the actual cylinder length and the effective cylinder length are equal. However, if base plates will be used under the cylinders or if the crankcase deck height is taller than stock, the thickness of the base plates and any extra base gaskets, or the change in deck height must be added to the cylinder length to determine the effective cylinder length.
- If the cylinder heads have been decked to increase compression, the amount they have been shortened must be subtracted from the effective cylinder length.
- If the effective cylinder length is equal to or no more than 030" longer than the cylinder length listed for a specific manifold in a chart, that manifold will fit the engine.
- If the effective cylinder length is significantly different from any manifold that is available, the manifold must be special ordered. (When placing an order for a special manifold by effective cylinder length, you will be asked for actual dimensions of the cylinders and other components. S&S will calculate the effective cylinder length).

## MANIFOLD SIZE NUMBER

Specifying the length of a special order manifold by size number has proven not to be a reliable method. Many manifolds ordered by this method have proved to be too long because the customer took a size number from a part that had been shortened and no longer matched the original specifications. Manifolds ordered by size number are not returnable because of fitment problems.

## MANIFOLDS FOR PANHEAD & KNUCKLEHEAD ENGINES

Port-to-port measurement is easy since the ports are parallel to each other. On an assembled or mocked up engine, a measurement from head-to-head on opposite sides of each port should ideally be taken before the head bolts and base nuts are tightened. To insure that the ports are parallel, the heads and cylinders should be positioned so both measurements are equal. A precision measuring instrument, such as a dial caliper, should be used to ensure accurate results.

### DIAGRAM 1 – FLANGE METHOD

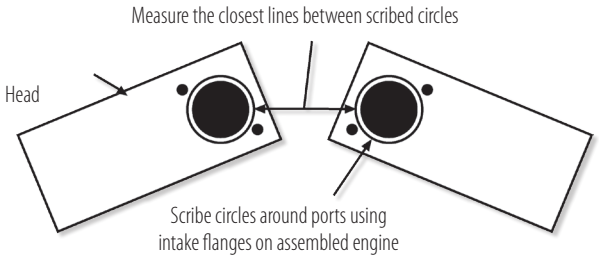


NOTE: Circles must be the same size as flange ID

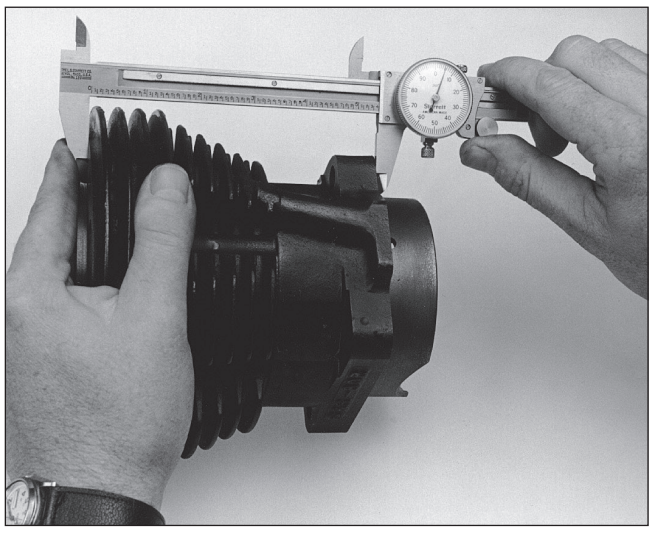

# YEAR CODES FOR OUR SERIALIZED PRODUCTS

S&S serial numbers begin with the following manufacturing year codes Year codes coincide with S&S Cycle's fiscal year, which starts on Oct 1st of the previous calendar year A product with serial number beginning with the letter "A" was manufactured in fiscal year 1978, between 10-01-77 and 09-31-78, or in the fiscal year 2000

**A ..... 1978**
**B ..... 1979**
**C ..... 1980**
**D ..... 1981**
**E ..... 1982**
**F ..... 1983**
**G ..... 1984**
**H ..... 1985**
**I ..... NOT USED**
**J ..... 1986**
**K ..... 1987**
**L ..... 1988**
**M ..... 1989**
**N ..... 1990**
**O ..... NOT USED**
**P ..... 1991**
**Q ..... NOT USED**
**R ..... 1992**
**S ..... 1993**
**T ..... 1994**
**U ..... 1995**
**V ..... NOT USED**
**W ..... 1996**
**X ..... 1997**
**Y ..... 1998**
**Z ..... 1999**
**A ..... 2000**
**B ..... 2001**
**C ..... 2002**
**D ..... 2003**
**E ..... 2004**
**F ..... 2005**
**G ..... 2006**
**H ..... 2007**
**I ..... NOT USED**
**J ..... 2008**
**K ..... 2009**
**L ..... 2010**
**M ..... 2011**
**N ..... 2012**
**O ..... NOT USED**
**P ..... 2013**
**Q ..... NOT USED**
**R ..... 2014**
**S ..... 2015**
**T ..... 2016**
**U ..... 2017**
**V ..... NOT USED**
**W ..... 2018**
**X ..... 2019**

# OLDER S&S® CARBURETOR REPLACEMENT PARTS

When ordering parts for older S&S carburetors, it is necessary to determine the correct style of float, needle and bowl S&S has used two different mechanisms to connect the float to the inlet needle

**FORKED MECHANISM:** Older style that utilizes a forked float tang, which slides into a slot in the top of the needle

**WIRE MECHANISM:** Current style that features a needle with a wire hook which attaches to the tang of the float

Parts of differing styles may not be used together For example, although the carburetor bowls of the two styles look very similar, they are not interchangeable due to differences in the float retaining pin position Some parts are no longer available for carbs with forked style mechanisms If these parts must be replaced, the entire bowl assembly must be replaced with wire mechanism style components

**FORKED TYPE MECHANISM (OBSOLETE)**

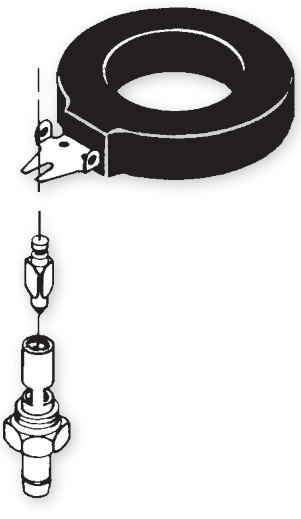

**WIRE TYPE MECHANISM**

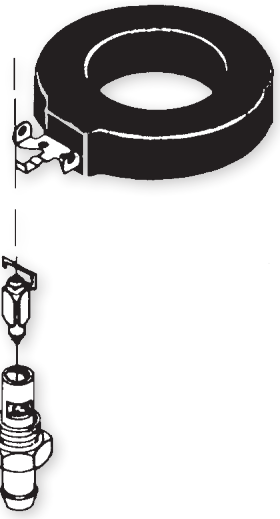

# CALCULATING CUSTOM HEAD BOLT LENGTHS

**Add:**

**A** **Cylinder Length**
**(Gasket surface to gasket surface measurement)**

**+ B** **Base Gasket Thickness**

**+ C** **Head Gasket Thickness**

**+ D or E** **Cylinder Head Thickness**
**(Gasket surface to head bolt washer pad measurement:)**

**D Short Side**
**All S&S = 1.207"**
**Late 1985-'90 Stock = 1.207"**
**1991-up Stock = 1.405"**

**E Long Side**
**All S&S = 2.700"**
**All Stock = 2.700"**

**+ F** **Desired thread engagement .563"**
**Usually 1½ times stud diameter - stock studs are ⅜"**

**Subtract:**

**G** **Cylinder Stud Installed Height**
**(Crankcase deck to top of stud measurement)**

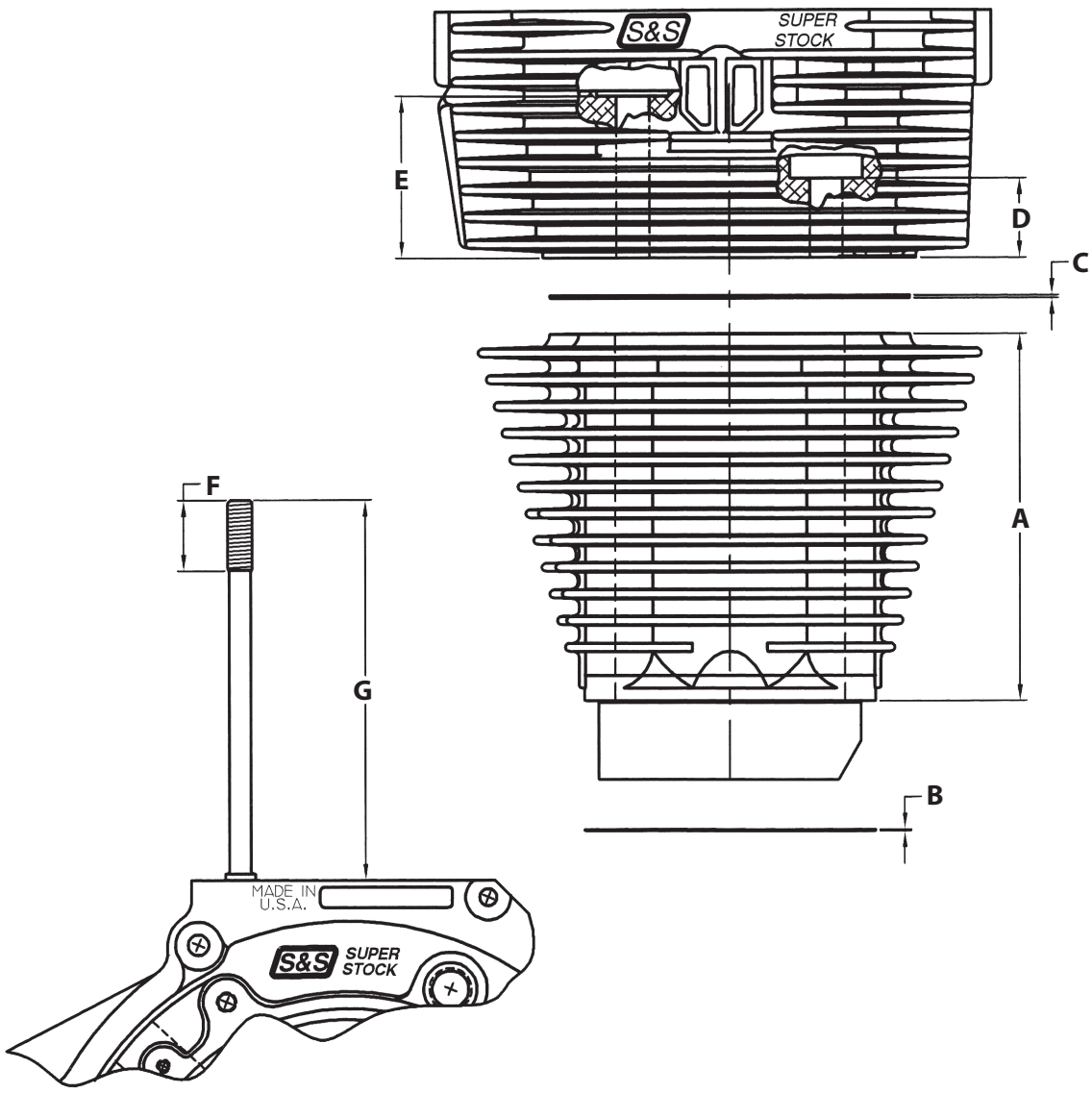

## A

### AIR CLEANERS
SINGLE BORE TUNED INDUCTION SYSTEM
1984-1999 BIG TWINS ..... 19
*REPLACEMENT PARTS ..... 89*
STEALTH AIR CLEANER KITS
1926-1984 VINTAGE ..... 112
*REPLACEMENT PARTS ..... 202*
1984-1999 BIG TWINS ..... 16
*COVERS ..... 17*
*REPLACEMENT PARTS ..... 88*
TEARDROP AIR CLEANER KITS
1926-1984 VINTAGE ..... 113, 164
*REPLACEMENT PARTS ..... 200, 201, 203*
1984-1999 BIG TWINS ..... 18
*REPLACEMENT PARTS ..... 90, 94*

### AIR FILTER
HIGH FLOW AIR FILTER KIT
1984-1999 BIG TWINS ..... 20
PRE-FILTERS
1984-1999 BIG TWINS ..... 20
STANDARD REPLACEMENT FILTERS
1984-1999 BIG TWINS ..... 20

## B

### BEARINGS
INNER PRIMARY BEARING RACE
1984-1999 BIG TWINS ..... 64

### BREATHER GEARS
STEEL ROTARY BREATHER GEAR
1926-1984 VINTAGE ..... 137
1984-1999 BIG TWINS ..... 38

### BREATHER REED VALVES
CRANKCASE BREATHER REED VALVES
1984-1999 BIG TWINS ..... 38

## C

### CAMSHAFTS
CAMSHAFTS
1926-1984 VINTAGE ..... 132, 133, 134
1984-1999 BIG TWINS ..... 45

### CARBURETOR KITS
AIR HORNS & AIR HORN CONVERSION KITS
1926-1984 VINTAGE ..... 164
BLACK CARBURETORS
1926-1984 VINTAGE ..... 166
1984-1999 BIG TWINS ..... 58
EARLY STYLE GAS & FUEL CARBURETORS
1926-1984 VINTAGE
*REPLACEMENT PARTS ..... 199*
JETS & CARB REBUILD KITS
1926-1984 VINTAGE ..... 167
1984-1999 BIG TWINS ..... 60
L-SERIES GAL& GBL GAS CARBURETORS
1926-1984 VINTAGE
*REPLACEMENT PARTS ..... 198*
OLDER S&S® CARBURETOR REPLACEMENT KITS ..... 228
SUPER B CARBURETOR KITS
1926-1984 VINTAGE
*REPLACEMENT PARTS ..... 193*
SUPER E & G COMPLETE CARBURETOR KITS
1926-1984 VINTAGE ..... 165
*REPLACEMENT PARTS ..... 194*
1984-1999 BIG TWINS ..... 58
*REPLACEMENT PARTS ..... 100*

### CIRCUIT BREAKER DRIVE GEARS
CIRCUIT BREAKER DRIVE GEARS
1926-1984 VINTAGE ..... 140

### CRANKCASES
2 CAM V-SERIES CRANKCASE
1984-1999 BIG TWINS
*REPLACEMENT PARTS ..... 70*
SHORT BLOCK ASSEMBLIES
1984-1999 BIG TWINS ..... 33
SPECIAL APPLICATION BIG BORE CRANKCASES
1984-1999 BIG TWINS ..... 35
*REPLACEMENT PARTS ..... 74*
SUPER STOCK® ALTERNATOR STYLE CRANKCASE
1926-1984 VINTAGE ..... 126
*REPLACEMENT PARTS ..... 176*
1984-1999 BIG TWINS ..... 34
*REPLACEMENT PARTS ..... 72*
SUPER STOCK® GENERATOR STYLE CRANKCASE
1926-1984 VINTAGE ..... 125
*REPLACEMENT PARTS ..... 178*
TOOLS
CRANKCASE OIL PASSAGE DRILLING JIG ..... 212

### CYLINDER HEADS
ALUMINUM CYLINDER HEADS FOR FLATHEAD SIDE VALVE ENGINES
1926-1984 VINTAGE ..... 148
CYLINDER BASE NUTS & STUDS ..... 149
CYLINDER HEAD AND MOTOR MOUNTS
1926-1984 VINTAGE ..... 149
CYLINDER HEADS FOR 1940-'47 OHV
1926-1984 VINTAGE ..... 148
HEAD BOLTS WITH WASHERS
1926-1984 VINTAGE ..... 149
1984-1999 BIG TWINS ..... 54
PERFORMANCE REPLACEMENT CYLINDER HEADS
1926-1984 VINTAGE ..... 147
*REPLACEMENT PARTS ..... 188, 190*
1984-1999 BIG TWINS ..... 52
*REPLACEMENT PARTS ..... 82*
SUPER STOCK® CYLINDER HEADS
1926-1984 VINTAGE ..... 147
*REPLACEMENT PARTS ..... 186*
1984-1999 BIG TWINS ..... 52, 53
*REPLACEMENT PARTS ..... 83, 84*

### CYLINDERS & PISTONS
CYLINDERS
1926-1984 VINTAGE ..... 142
1984-1999 BIG TWINS ..... 42
CYLINDERS & PISTON KITS
1926-1984 VINTAGE ..... 141, 142
1984-1999 BIG TWINS ..... 40

## D

### DRIVE BELTS
GATES® HIGH STRENGTH FINAL DRIVE BELTS
1984-1999 BIG TWINS ..... 64

## E

### ELECTRONICS
COMPRESSION RELEASE
1984-1999 BIG TWINS ..... 62
ELECTRONIC TIMERS
1929-1984 VINTAGE ..... 161
HI-4N PERFORMANCE IGNITION
1926-1984 VINTAGE ..... 170
1984-1999 BIG TWINS ..... 63
HIGH OUTPUT COILS
1984-1999 BIG TWINS ..... 62
SUPER STOCK IGNITIONS
1926-1984 VINTAGE ..... 170
1984-1999 BIG TWINS ..... 63

### ENGINES
49-STATE EPA ENGINES
1984-1999 BIG TWINS ..... 31
50-STATE LEGAL ENGINES
1984-1999 BIG TWINS ..... 32
ENGINE OVERVIEW
1926-1984 VINTAGE ..... 120
1984-1999 BIG TWINS ..... 26
ENGINE STANDS ..... 216
KN-SERIES
1926-1984 VINTAGE ..... 124
P-SERIES ENGINES
1926-1984 VINTAGE ..... 123
SH-SERIES ENGINES
1926-1984 VINTAGE ..... 121, 122
V80 ENGINES
1984-1999 BIG TWINS ..... 29
V96 ENGINES
1984-1999 BIG TWINS ..... 29
V111 ENGINES
1984-1999 BIG TWINS ..... 28
V124 ENGINES
1984-1999 BIG TWINS ..... 27
V-SERIES LONG BLOCKS
1984-1999 BIG TWINS ..... 30

### EXHAUST
DEALER SERVICE KIT ..... 216
GRAND NATIONAL® 4" SLIP-ONS
1984-1999 BIG TWINS ..... 13
1999-2006 BIG TWINS
*REPLACEMENT PARTS ..... 107*
GRAND NATIONAL® SLIP-ONS
1995-2009 DYNA® MODELS ..... 11
Mk45 4.5" TOURING MUFFLERS
1999-2006 BIG TWINS ..... 14
*REPLACEMENT PARTS ..... 103*
2007-2016 BIG TWINS ..... 14
POWER TUNE DUALS
1984-1999 BIG TWINS ..... 15
1999-2006 BIG TWINS
*REPLACEMENT PARTS ..... 108*
SIDEWINDER 2:1 EXHAUST SYSTEM
1984-1999 BIG TWINS ..... 8
*REPLACEMENT PARTS ..... 104*
SLASH CUT 4" SLIP-ONS
1999-2006 BIG TWINS ..... 12
*REPLACEMENT PARTS ..... 107*
SLASH CUT SLIP-ONS
1984-1999 BIG TWINS ..... 10
*REPLACEMENT PARTS ..... 106*

## F

### FLYWHEELS
CONNECTING ROD CHECKING PINS ..... 209
CRANKPIN NUT CLEARANCING GAUGES ..... 212
FLYWHEEL BALANCING KITS ..... 206
FLYWHEELS
1926-1984 VINTAGE ..... 126, 127, 128
*REPLACEMENT PARTS ..... 180, 181*
1984-1999 BIG TWINS ..... 36
*REPLACEMENT PARTS ..... 78, 79*
REPLACEMENT FLYWHEELS FOR V-SERIES ENGINES ..... 36
IDENTIFICATIONS OF FLYWHEELS ..... 226

## G

### GASKETS
GASKETS
1926-1984 VINTAGE ..... 173
1984-1999 BIG TWINS ..... 65

### GEARCOVERS
BILLET GEARCOVERS
1926-1984 VINTAGE ..... 139
*REPLACEMENT PARTS ..... 185*
1984-1999 BIG TWINS ..... 39
*REPLACEMENT PARTS ..... 68*
CAST GEARCOVERS
1926-1984 VINTAGE ..... 139
*REPLACEMENT PARTS ..... 185*
1984-1999 BIG TWINS ..... 39
*REPLACEMENT PARTS ..... 68*
GENERATOR STYLE GEARCOVER
1926-1984 VINTAGE ..... 138
*REPLACEMENT PARTS ..... 184*
IGNITION COVERS
1984-1999 BIG TWINS ..... 39, 139

## H

### HEAD BOLTS
CALCULATING CUSTOM HEAD BOLT LENGTHS ..... 229
HEAD BOLT KITS
1926-1984 VINTAGE ..... 149
1984-1999 BIG TWINS ..... 54

## J

### JETS
JET & CARB REBUILD KITS
1926-1984 VINTAGE ..... 167
1984-1999 BIG TWINS ..... 60

# M


**MANIFOLDS**
INTAKE MANIFOLDS
1926-1984 VINTAGE
*REPLACEMENT PARTS ..... 161*
MANIFOLD CONVERSION KIT
1984-1999 BIG TWINS ..... 57
MANIFOLDS FOR CARBURETED ENGINES
1926-1984 VINTAGE ..... 162
1984-1999 BIG TWINS ..... 56
MANIFOLDS FOR SINGLE BORE EFI BIG TWINS
1984-1999 BIG TWINS ..... 57
ORDERING S&S® MANIFOLDS ..... 227


# O


**OIL FILTER**
BILLET FILTER BRACKET
1984-1999 BIG TWINS ..... 38
SPORTSTER® & BUELL® MODELS ..... 122
**OIL PUMPS**
HIGH VOLUME HIGH PRESSURE BILLET OIL PUMPS
1984-1999 BIG TWINS ..... 37
*REPLACEMENT PARTS ..... 81*
STANDARD BILLET OIL PUMPS
1926-1984 VINTAGE ..... 131
*REPLACEMENT PARTS ..... 182*
1984-1999 BIG TWINS ..... 37
*REPLACEMENT PARTS ..... 80*


# P


**PINION GEARS**
PINION SHAFT GEAR KITS
1926-1984 VINTAGE ..... 135
1984-1999 BIG TWINS ..... 46
VINTAGE MODELS
PINION GEARS ..... 136
**PINION SHAFT**
PINION SHAFT ASSEMBLIES
1926-1984 VINTAGE ..... 130
**PISTONS**
PISTON KITS
1926-1984 VINTAGE ..... 143, 144, 145, 146
1984-1999 BIG TWINS ..... 43
**POWER KITS**
80" HOT SET UP KIT
1984-1999 BIG TWINS ..... 25
84", 86", or 88" STOCK BORE STROKER
1926-1984 VINTAGE ..... 115
84" STROKER HOT SET UP KIT
1926-1984 VINTAGE ..... 118
89" STROKER KIT
1984-1999 BIG TWINS ..... 24
93" SIDEWINDER® HOT SET UP KIT
1926-1984 VINTAGE ..... 118
96" HOT SET UP KIT
1984-1999 BIG TWINS ..... 23
RETRO CONVERSION KIT
1926-1984 VINTAGE ..... 117
SIDEWINDER® BIG BORE KITS
1926-1984 VINTAGE ..... 114
SIDEWINDER® KITS
1984-1999 BIG TWINS ..... 22
STOCK BORE STROKER KITS
1926-1984 VINTAGE ..... 116
TOP END REPLACEMENT KITS
1926-1984 VINTAGE ..... 119
**PUSHRODS**
ADJUSTABLE CHROMOLY STEEL PUSHRODS
1926-1984 VINTAGE ..... 154
NON-ADJUSTABLE PUSHRODS
1984-1999 BIG TWINS ..... 49
PUSHROD COVERS & RELATED PARTS
1926-1984 VINTAGE ..... 155
1984-1999 BIG TWINS ..... 49
PUSHROD KITS
1926-1984 VINTAGE ..... 152, 153
QUICKEE ADJUSTABLE PUSHRODS
1926-1984 VINTAGE ..... 152
1984-1999 BIG TWINS ..... 48
SOLID LIFTER CONVERSION KIT
1926-1984 VINTAGE ..... 154
STANDARD ADJUSTABLE PUSHRODS
1984-1999 BIG TWINS ..... 48
TIME-SAVER ADJUSTABLE PUSHRODS
1926-1984 VINTAGE ..... 154
1984-1999 BIG TWINS ..... 48


# R


**ROCKER ARMS**
FORGED ROLLER ROCKER ARMS
1929-1984 VINTAGE ..... 159
1984-1999 BIG TWINS ..... 51
STANDARD FORGED ROCKER ARMS
1984-1999 BIG TWINS ..... 51
*REPLACEMENT PARTS ..... 51*
**ROCKER COVERS**
BILLET ROCKER COVERS
1926-1984 VINTAGE ..... 160
*REPLACEMENT PARTS ..... 192*
1984-1999 BIG TWINS ..... 55
*REPLACEMENT PARTS ..... 87*
DIE CAST ROCKER COVERS
1984-1999 BIG TWINS ..... 55
*REPLACEMENT PARTS ..... 86*
PAN COVERS
1926-1984 VINTAGE ..... 160
ROCKER ARM HOUSINGS
1926-1984 VINTAGE ..... 160
VALVE SPRING COVERS (TINS)
1926-1984 VINTAGE ..... 159


# S


**SPARK PLUGS**
SPARK PLUGS ..... 213
**SPROCKET SHAFT**
SPROCKET SHAFT ASSEMBLIES
1926-1984 VINTAGE ..... 129
**STARTER COVER**
RETRO KICK STARTER COVER KIT
1926-1984 VINTAGE ..... 172

# T


**TAPPETS**
HIGH PERFORMANCE HYDRAULIC TAPPETS
1984-1999 BIG TWINS ..... 47
HYDRAULIC LIFTER LIMITED TRAVEL SPACER (HL2T)
1984-1999 BIG TWINS ..... 47
HYDRAULIC TAPPET COMPONENTS
1926-1984 VINTAGE ..... 151
TAPPET GUIDES
1926-1984 VINTAGE ..... 151
1984-1999 BIG TWINS ..... 47
TAPPETS
1926-1984 VINTAGE ..... 151

**THROTTLE ASSEMBLIES**
THROTTLE CABLE ASSEMBLIES
1926-1984 VINTAGE ..... 169

**THROTTLE BODIES**
SINGLE BORE EFI THROTTLE BODIES
1984-1999 BIG TWINS
*REPLACEMENT PARTS ..... 102*

**THROTTLE CABLE**
TWO CABLE THROTTLE ASSEMBLIES
1984-1999 BIG TWINS ..... 59
*REPLACEMENT PARTS ..... 59*

**TOOLS**
TOOLS
S&S OIL ..... 213

**TRANSMISSIONS**
5-SPEED TRANSMISSION CASE
1926-1984 VINTAGE ..... 171
*REPLACEMENT PARTS ..... 204*
TRANSMISSION CASE REPLACEMENT PARTS
1984-1999 BIG TWINS ..... 110


# V


**VALVE SPRINGS**
REPLACEMENT PARTS FOR ALL LIFTS
1984-1999 BIG TWINS ..... 69
SIDEWINDER® .650" LIFT VALVE SPRINGS
1984-1999 BIG TWINS ..... 50
STREET PERFORMANCE .585" LIFT VALVE SPRINGS
1984-1999 BIG TWINS ..... 50
VALVE SPRING COVERS
1929-1984 VINTAGE ..... 159
VALVE SPRING KITS
1926-1984 VINTAGE ..... 157, 158




# ARE YOU FAST ENOUGH?

## S&S® CYCLE INVITES YOU TO JOIN THE CLUB

Go here: sscycle.com/join-seconds-club.

**Rules:**

1. Proof that your street-ridden motorcycle *(D.O.T. tires, full charging system, no wheelie bars or air shifts)* equipped with S&S performance products.
2. An 11.99 or quicker quarter-mile time. We'll need an official timing slip from a sanctioned dragstrip dated after June 1, 2005 and signed by the timekeeper. *(A good photo will do.)*
3. The registered owner must ride the motorcycle for the qualification pass.
4. A photograph of yourself and the motorcycle. Action shots are preferred if sharp and clear.

Members will receive a certificate, club patch, and t-shirt, but no payment or other considerations.

S&S Cycle, Inc. reserves the right to change prices, terms, availability, and specifications without prior notice.

**CUSTOMER SUPPORT HOURS: MONDAY–FRIDAY 8:00A.M.–5:00P.M. CST**

Calls should be directed to (608) 627-1497. International customers should use this number to place orders from outside the United States. This number should also be used if you have a technical or warranty question, or to contact the Accounting departments. This is not a toll-free number.

S&S® Cycle, Inc.
14025 CTY HWY G
Viola, WI 54664
608-627-1497
sscust@sscycle.com
sscycle.com
© 2020

PROVEN S&S PERFORMANCE

**510-0749**




Made in USA