
MIDWEST
Motorcycle Supply
POLICE
911
800-325-3914
Local & International:
636-931-3200



"For "2021" we plan to build some of the wildest and craziest machines ever and to make a lot of people happy with what we do. Our goal is always the same, build the best for the best people on the planet, BIKERS... Ride safe tonight!"
T.D. Ward

Follow T.D.'s latest builds and bike shows on Facebook:
Rods & Rides Motorcycle Company
T.D. Ward of Rods & Rides build award winning custom bikes in an impressive range of styles, his "go-to" powertrains & parts: Ultima® Products including Engines, Transmissions, Belt Drives, Starter Motors & hard parts like Billet Wheels, Springer Forks & Headlights, etc.



★ FORWARD ★

We are not a representative of any motorcycle manufacturer and the parts we sell are not necessarily recommended by any motorcycle manufacturer.

All words used in this catalog denoting any motorcycle manufacturer, models or motorcycle, or part numbers are intended for use as reference only. Although our replacement parts are not original factory equipment, our intention is to provide quality replacement parts that meet or exceed standards set by the manufacturer.

Harley-Davidson® Parts: Harley® and Harley-Davidson® and other model names of Harley motorcycles are used as a reference only. Some H-D® part numbers are also used as reference only. We are not an authorized Harley® dealer and in no way do we have, or intend to imply any kind of business relationship with Harley-Davidson Motor Company®. Our intention is to provide products that can be used on a Harley-Davidson® motorcycle.

Names and words that are registered trademarks of Harley-Davidson® Inc. Milwaukee, WI, such as Buddy Seat®, Buell®, Disc Glide®, Duo Glide®, Dyna Glide®, Electra Glide®, Evolution®, Harley-Davidson®, Harley®, H-D®, HD®, Heritage Softail®, Hugger®, Fat Boy®, Fat Bob®, Low Glide®, Low Rider®, Road King®,Roadster®, Softail®, Sport Glide®, Sportster®, Sturgis®, Super Glide®, Tour-Pak®, Tour Glide®, Twin Cam 88™, Ultra Classic®, and Wide Glide® are not intended to imply that they are Harley-Davidson® original equipment by their use in connection with Harley-Davidson® factory part numbers.

The following model designations for Harley-Davidson® motorcycles are used in this catalog for reference only: EL, FL, FLH, FLHR, FLHS, FLHT, FLHTC, FLHTC-I, FLHTC Ultra Classic, FLHX, FLST, FLSTC, FLSTF, FLSTN, FLSTS, FLT, FLTC, FLTC Ultra Classic, FXB, FXD, FXDB, FXDC, FXDG, FXDL, FXDS, FXDS-Conv., FXDWG, FXE, FXEF, FXLR, FXR, FXRC, FXRD, FXRDG, FXRP, FXRS, FXRSE, FXRS-Conv., FXRS-SP, FXRT, FXS, FXSB, FXST, FXSTC, FXSTS, FXSTSB, FXWG, GE, K, KH, WL, WLA, XL, XLCH, XLCR, XLH, XLH 883, XLH 1100, XLH 1200, XLR, XLS, XLT, XLX AND XR-1000.

The words: Ultima®, Ultima Saddle®, Midwest Motorcycle Supply Distributors Corp.®, Fat Bastard®, Thundervolt®, Big Growl®, Thunder Fire®, Kool Kat®, King Spoke®, Silver Horse®, Fatso™ & Fatso Motor Parts™ are trademarks of Midwest Motorcycle Supply, Inc., Pevely, Missouri, U.S.A. All other trademarks, registered trademarks and brand names used in this catalog are the property of their respective holders.

WARNING

Serious injury, death and property damage can result from the improper use, control, alteration, or maintenance of motorcycles. The dealer and dealers customers must exercise good judgement in the use, control, alteration, part selection and installation, and maintenance of motorcycles. Midwest has no control over the judgement of others and assumes no responsibility or liability of any nature for the failure of others to use good judgement.

PLEASE NOTE:

MOTORCYCLES MODIFIED WITH SOME AFTERMARKET PARTS, ACCESSORIES AND PERFORMANCE PARTS MAY BE RESTRICTED FROM USE ON PUBLIC ROADS AND/OR LIMITED TO CLOSED COURSES. PLEASE SEE U.S. EPA AND YOUR RESPECTIVE STATE REGULATIONS.

© MIDWEST MOTORCYCLE SUPPLY DIST. CORP.FEBUARY 2021

TABLE OF CONTENTS

ELECTRICAL 1
All electrical parts and accessories including headlight and taillight brackets, license plate holders, and horns.

FRAME AND BODY 2
Custom frames, hardtails, struts, foot pegs, fenders, shocks, motor mounts, side stands, highway bars and footboards.

FRONT END 3
Custom and stock replacement front ends, and all the parts you need with the above from top tree to, but not including, axle.

HANDLEBAR/CONTROL 4
Handlebars, risers, hand and foot controls for clutch, brake levers, shifters, throttles, mirrors, all gauges, fittings, and housings, controls, speedometer, tachometer, cables and hoses.

TIRES, WHEELS & BRAKES 5
Tires, tubes, rim strips, stock and custom wheels, axles, brakes and all parts you need for the above.

ENGINE 6
All parts on and in engine except electrical, ignition and transmission.

ENGINE BIG BOOK . . . . . E
Comprehensive engine reference book with exploded views and replacement parts for all Ultima® Engines plus H-D®, S&S®, Rev Tech® & Merch®

DRIVE 7
Everything from the engine to the rear wheels, including transmission, shifter, kickstarter, clutch, drive chain, chain adjuster, sprockets, belt drives, chain covers, chain guards, belt guards, and all the related parts.

GAS / AIR / OIL 8
All parts from, and including, tanks or air cleaners to the engine. Including gas tanks & all attached parts, carburetor parts, rebuild kits, manifolds, air filters, oil tanks & all attached parts, oil filters, oil lines, oil pressure gauges, oil temperature gauges and oil coolers.

IGNITION 9
All ignition parts and accessories including magnetos, coils, contact points, condensers, tune up kits, distributors, and spark plugs.

EXHAUST 10
All exhaust system parts from the engine out, O2 Sensors

SEATS / SISSY BARS / TOURING 11
All seats and related items, Luggage Racks & Saddle Bags.

CHEMICAL / SHOP / ENGINE OIL / TOOL 12
Cleaners, polishes, lubricants, paints, sealants, engine & gear oil & essential tools.

HARDWARE / MISCELLANEOUS 13
All dress and custom items, including decorative nuts, bolts, and fasteners.

A

Air Cleaner Assemblies ....Section 8
Air Cleaner Components ....Section 8
Air Filter Elements ....Section 8
Air Filter oil....Section 12
Air Filter Service Kit....Section 12
Air Filters ....Section 8
Alarms ....Section 1
Amatures ....Section 1
Assembly Lube....Section 12
Audio Systems....Section 12
Axle Adjusters....Section 7
Axle Hardware....Section 2, 5
Axle Reducer....Section 5
Axle Spacers ....Section 5
Axles....Section 3,5

B

Balance Masters....Section 7
Banjo Bolts ....Section 4
Banjo Fittings....Section 4
Banjo Washers ....Section 4
Batteries ....Section 1
Battery Accessories....Section 1
Battery Cables....Section 1
Battery Chargers ....Section 1
Battery Trays & Covers....Section 1
Bead Breaker....Section 12
Belt Drive Components....Section 7
Belt Drive Covers....Section 7
Belt Drive Pulleys ....Section 7
Belt Drives ....Section 7
Belt Guards....Section 7
Belt/Final Drive ....Section 7
Belt/Primary Drive....Section 7
Bin Boxes ....Section 12
Bolt Covers....Section 13
Bolt Kits ....Section 13
Bolts/Allen Head....Section 13
Bolts/Button Head....Section 13
Bolts/Carriage....Section 13
Bolts/Hex Head....Section 13
Bracelets....Section 11
Brake Accessories....Section 5
Brake Bleeders....Section 5,12
Brake Cables....Section 4,5
Brake Calipers & Brackets....Section 5
Brake Drums....Section 5
Brake Fittings....Section 4
Brake Fluid ....Section 12
Brake Hardware....Section 5
Brake Line Clamp....Section 4
Brake Line Kits ....Section 4
Brake Lines....Section 4
Brake Pads....Section 5
Brake Pedals ....Section 4
Brake Rotor Spacers ....Section 5
Brake Rotors....Section 5
Brake Switches....Section 4
Break-In Lube....Section 12
Breather Gear Shims....Section 6
Breather Gears....Section 6
Bulbs....Section 1

C

Cable & Chain Lube ....Section 12
Cable Clamp....Section 4
Cable Cover....Section 4
Cable Tie Tool....Section 11
Cable Ties....Section 1,12
Cam Bearing....Section 6
Cam Bearing Tool....Section 13
Cam Chain Guide....Section 6
Cam Chain Tensioner....Section 6
Cam Covers....Section 6
Cam Drive Conversion ....Section 6
Cam Shims....Section 6
Cam Tools....Section 12
Cams ....Section 6
Capacitor ....Section 1
Carburetor Components .... Section 8
Carburetor Jets....Section 8
Carburetor Kits ....Section 6,8
Carburetor Rebuild Kits .... Section 8
Carburetor Thunderjets ....Section 8
Carburetors....Section 8
Cargo Nets ....Section 11
Chain Conversion Kits....Section 7
Chain Guards ....Section 7
Chains Primary/Final ....Section 7
Charging Systems & Parts ....Section 1
Choke Cables/Knobs....Section 8
Cigarette Lighters ....Section 1
Circuit Breakers....Section 1
Cleaners & Detailers....Section 12
Clutch Balance Masters....Section 7
Clutch Cables ....Section 4
Clutch Components ....Section 7
Clutch Easy Pull Kits ....Section 7
Clutch Hubs....Section 7
Clutch Levers....Section 4
Clutch Pressure Plates ....Section 7
Clutch Pushrods ....Section 7
Clutch Rebuild parts ....Section 7
Clutch Release Arms ....Section 7
Clutch Tools ....Section 12
Clutch/Performance Kits....Section 7
Coil Bracket ....Section 9
Coil Covers ....Section 9
Coil Mounting Kits....Section 8
Compensator Sprocket....Section 7
Compression Release ....Section 6
Connecting Rods Section6
Crank Case Breathers....Section 8

Crank Case Parts ..... Section 6
Crankcase Rollers ..... Section 6
Crankcase Vent Filter ..... Section 8
Crankshafts ..... Section 6
Crimping Tool ..... Section 8
Cylinder Head Temp Gauge ..... Section 4
Cylinder Heads ..... Section 6
Cylinders ..... Section 6

D

Dampers ..... Section 3
Dash & Gas Tank Panels ..... Section 8
Dash Accessories ..... Section 1
Dash Kits/Covers ..... Section 4
Debris Deflectors ..... Section 2
Delfi Connectors & Accessories ..... Section 1
Derby Covers ..... Section 7
Deutsch Connectors & Accessories ..... Section 1
Distributors ..... Section 9
Drain Plugs ..... Section 8

E

Engine Cases ..... Section 6
Engine Covers ..... Section 6
Engine Gaskets ..... Section 6
Engine Oil ..... Section 12
Engine Parts ..... Section 6
Engine Performance Kits ..... Section 6
Engine Rebuild Program ..... Section 6
Engine Spec Sheets ..... Section 6
Engine Stands ..... Section 12
Engine-Lower End Parts ..... Section 6
Engine-Top End Parts ..... Section 6
Engines ..... Section 6
Exhaust Baffles ..... Section 10
Exhaust Clamps ..... Section 10
Exhaust Cleaner ..... Section 10
Exhaust Coating ..... Section 10
Exhaust End Caps ..... Section 10
Exhaust Hardware ..... Section 10
Exhaust Heat Shields ..... Section 10
Exhaust Wrap ..... Section 10
Exhaust/EVO ..... Section 10
Exhaust/Metric ..... Section 10
Exhaust/Muffler ..... Section 10
Exhaust/Panhead ..... Section 10
Exhaust/Shovelhead ..... Section 10
Exhaust/Sportster ..... Section 10
Exhaust/Sportster Ironhead ..... Section 10
Exhaust/Twin Cam ..... Section 10

F

Fairing ..... Section 11
Fender Brackets/Supports ..... Section 2
Fender Lights ..... Section 1
Fender Spacers ..... Section 2
Fender Struts ..... Section 2
Fender Tips & Trim ..... Section 2
Fenders ..... Section 2
Field Coils ..... Section 1
Flashers ..... Section 1
Floor Boards ..... Section 4
Floorboard Brackets ..... Section 4
Flywheels ..... Section 6
Foot Pegs ..... Section 4
Footpeg Brackets/Supports ..... Section 4
Footpeg Extensions ..... Section 4
Footpeg Mounts ..... Section 4
Fork Assemblies ..... Section 3
Fork Boots ..... Section 3
Fork Braces ..... Section 3
Fork Cups ..... Section 3
Fork Oil ..... Section 12
Fork Seals ..... Section 3
Fork Sliders ..... Section 3
Fork Tube Accessories ..... Section 3
Fork Tube Covers ..... Section 3
Fork Tubes ..... Section 3
Forward Control Adapter ..... Section 4
Forward Control Hardware ..... Section 4
Forward Control Spacers ..... Section 2
Forward Controls ..... Section 4
Frame Inserts ..... Section 2
Frame Parts ..... Section 2
Frames ..... Section 2
Front End Accessories ..... Section 3
Front End Assemblies ..... Section 3
Fuel Filters ..... Section 8
Fuel Injection Sensors ..... Section 8
Fuel Injection Systems ..... Section 8,9
Fuel Injectors ..... Section 8
Fuel Lines ..... Section 8
Fuel Valves ..... Section 8
Fuel/Oil Line Separators ..... Section 8
Fuse Holders ..... Section 1

G

Gas Caps ..... Section 8
Gas Line ..... Section 8
Gas Tank Mounts & Hardware ..... Section 8
Gas Tanks ..... Section 8
Gaskets - Base ..... Section 6
Gaskets - Cam Cover ..... Section 6
Gaskets - Carbruetor ..... Section 6
Gaskets - Derby Cover ..... Section 6
Gaskets - Head ..... Section 6
Gaskets - Inspection Cover ..... Section 6
Gaskets - Misc. ..... Section 6
Gaskets - Motor ..... Section 6
Gaskets - Primary ..... Section 6
Gaskets - Transmission ..... Section 6
Gear Oil ..... Section 12
Generator Parts ..... Section 1
Gloves/Nylon ..... Section 12

Goggles ..... Section 11
Griplock ..... Section 12

H
Hand Grips ..... Section 4
Hand Levers ..... Section 4
Handlebar Clamps ..... Section 4
Handlebar Control Hardware ..... Section 4
Handlebar Controls ..... Section 4
Handlebar Dampers ..... Section 4
Handlebar Reducers ..... Section 4
Handlebar Risers ..... Section 4
Handlebar Switch Housings ..... Section 4
Handlebar Switches ..... Section 4
Handlebar Wiring Harness ..... Section 4
Handlebars ..... Section 4
Head Bolt Covers ..... Section 6
Head Bolts ..... Section 6
Head Cup Remover ..... Section 12
Head Cup/Race Installer ..... Section 12
Headlight Brackets & Housing ..... Section 1
Headlight Relay ..... Section 1
Headlights ..... Section 1
Heat Shrink ..... Section 1
Helmet Buckles ..... Section 11
Highway Bars ..... Section 2
Horns ..... Section 1
Hose Clamps ..... Section 8

I
Idle Cables ..... Section 4
Ignition Advance Units ..... Section 9
Ignition Coils ..... Section 9
Ignition Components ..... Section 9
Ignition Module Cover ..... Section 9
Ignition Points & Condensers ..... Section 9
Ignition Programmer ..... Section 9
Ignition Rotors ..... Section 9
Ignition Switch Mounts ..... Section 1
Ignition Switches ..... Section 1
Ignitions ..... Section 9
Indicator Lights ..... Section 1
Inner Tubes ..... Section 5
Inspection Covers ..... Section 7
Intake Flange ..... Section 8
Intake Manifolds ..... Section 8
Intake Seal ..... Section 8

J
Jumper Cables ..... Section 1

K
Kickstand Extensions ..... Section 2
Kickstand Wedge ..... Section 2
Kickstands ..... Section 2
Kickstart Kit ..... Section 7
Kickstart Parts & Hardware ..... Section 7
Kickstart Pedals ..... Section 7
Kromets ..... Section 14

L
Leather Apparel ..... Section 12
Leather Gloves ..... Section 12
License Brackets & Frames ..... Section 1
Lifter Converter ..... Section 6
Lifters ..... Section 6
Load Equalizers ..... Section 1
Lug Wrenches ..... Section 5
Luggage Racks ..... Section 11

M
Manifold Accessories ..... Section 8
Manifold Extensions ..... Section 8
Manifold Wrench ..... Section 12
Manifolds ..... Section 8
Marker Lights ..... Section 1
Master Cylinder Covers ..... Section 4
Master Cylinder Rebuild Kits ..... Section 4
Master Cylinders ..... Section 4
Mirror Clamps ..... Section 4
Mirrors ..... Section 4
Motor Mounts ..... Section 2
Mousetrap Accessories ..... Section 4

N
Neck Bearings ..... Section 3
Neutral Switches ..... Section 1,7
Nitrous Kits/Parts ..... Section 8
Nuts Kit ..... Section 13
Nuts/Acorn ..... Section 13
Nuts/Cap ..... Section 13
Nuts/Hex ..... Section 13
Nuts/Nylon Hex ..... Section 13
Nuts/Pike ..... Section 13
Nuts/Rock Arm Cover ..... Section 13

O
Octane Boost ..... Section 12
Oil Cooler ..... Section 8
Oil Filter Elements ..... Section 8
Oil Filter Mount ..... Section 8
Oil Filters ..... Section 8
Oil Line Fittings ..... Section 8
Oil Lines ..... Section 8
Oil Pressure Gauge Bracket ..... Section 8
Oil Pressure Gauges ..... Section 8
Oil Pressure Switches ..... Section 8
Oil Pump Covers ..... Section 6
Oil Pump Gears ..... Section 6
Oil Pump Hardware ..... Section 6
Oil Pump Plugs ..... Section 6
Oil Pumps ..... Section 6
Oil Tank Cap/Dipstick ..... Section 8

Oil Tank Filler Spout ..... Section 8
Oil Tank Mounting Kits ..... Section 8
Oil Tanks ..... Section 8
Oil Temp. Gauge ..... Section 4
Oil Transfer Valve ..... Section 6
Oil Treatment ..... Section 12

P

Paint ..... Section 12
Petcocks ..... Section 8
Pillion Pads ..... Section 11
Pinion Bearings ..... Section 6
Pinion Gears ..... Section 6
Pinion Key ..... Section 6
Pinion Tools ..... Section 12
Piston Rings ..... Section 6
Pistons ..... Section 6
Point Covers ..... Section 6
Primary Chain Tensioner ..... Section 7
Primary Covers Inner/Outer ..... Section 7
Primary Drive Components/Belts ..... Section 7
Primary Drive Components/Chain ..... Section 7
Primary Hardware ..... Section 7
Primary Locking Tab ..... Section 7
Primary Lubricant ..... Section 12
Primary Spacers ..... Section 7
Pulley & Sprocket Spacers ..... Section 7
Pulley Covers ..... Section 7
Pulley Hardware ..... Section 5,7
Pulley Nut ..... Section 7
Pulleys ..... Section 5,7
Pushrod Tubes ..... Section 6
PUshrods ..... Section 6

R

Regulator Covers ..... Section 1
Regulator Mounts ..... Section 1
Regulators ..... Section 1
Rim Strips ..... Section 5
Rims ..... Section 5
Riser Hardware ..... Section 4
Risers ..... Section 4
Rocker Arms ..... Section 6
Rocker Box Hardware ..... Section 6
Rocker Boxes ..... Section 6
Rocker Shaft Hardware ..... Section 6
Rod Races ..... Section 6
Rod Rollers ..... Section 6

S

Saddlebag Supports & Hardware ..... Section 11
Saddlebags ..... Section 11
Safety Wire ..... Section 12
Seat Brackets & Hardware ..... Section 11
Seats ..... Section 11
Shift Levers ..... Section 4
Shift Lites ..... Section 4
Shift Pegs ..... Section 4
Shift Rods ..... Section 4
Shifter Linkage ..... Section 4
Shock Hardware ..... Section 2
Shock Lowering Kits ..... Section 2
Shock Pump ..... Section 2
Shock Stud Conversion ..... Section 2
Shock Wrenches ..... Section 12
Shocks ..... Section 2
Side Covers/FXR ..... Section 13
Side Covers/XL ..... Section 13
Silicone Sealant ..... Section 12
Solenoids & Parts ..... Section 1
Spacers ..... Section 13
Spark Plug Covers ..... Section 9
Spark Plug Wires ..... Section 9
Spark Plugs ..... Section 9
Speedo Drive Covers ..... Section 4
Speedo Drive Gears ..... Section 4
Speedo Sensors ..... Section 7,4,1
Speedo/Tach Brackets ..... Section 4
Speedo/Tach Housing ..... Section 4
Speedometer Cables ..... Section 4
Speedometer Dampener ..... Section 4
Speedometers ..... Section 4
Spotlight Bars ..... Section 1
Springer Accessories ..... Section 3
Sprocket Covers ..... Section 6,7
Sprocket Hardware ..... Section 7
Sprocket Nut ..... Section 7
Sprocket Shaft Spacers ..... Section 2,6
Sprocket Spacers ..... Section 7
Sprockets ..... Section 7
Starter Covers ..... Section 1
Starter Jackshafts ..... Section 1
Starter Parts & Accessories ..... Section 1
Starter Push Buttons ..... Section 1
Starter Relays ..... Section 1
Starter Switches ..... Section 1
Starters ..... Section 1
Stators ..... Section 1
Swing Arms & Parts ..... Section 2
Switch/Voes ..... Section 1
Switches/Universal ..... Section 1

T

Tach Cable ..... Section 4
Tachometers ..... Section 4
Taillight Brackets ..... Section 1
Taillights ..... Section 1
Tank Sealant ..... Section 12
Tappet Blocks ..... Section 6
Tappet Tools ..... Section 12
Tappets ..... Section 6
Threadlocker ..... Section 12
Throttle Assemblies ..... Section 4
Throttle Cables ..... Section 4

Throttle Components ..... Section 4
Throttle Housing ..... Section 4
Thrust Washers ..... Section 7
Tie Downs & Accessories ..... Section 11
Timing Plugs ..... Section 6
Tire Irons ..... Section 12
Tires ..... Section 5
Toggle Switches ..... Section 1
Tool Kits ..... Section 12
Tools ..... Section 12
Transmission ..... Section 7
Transmission 6spd Conversion ..... Section 7
Transmission Adapter Plate ..... Section 2
Transmission Breather ..... Section 7
Transmission Cases ..... Section 7
Transmission Covers ..... Section 7
Transmission Gaskets ..... Section 7
Transmission Gears ..... Section 7
Transmission Mount Kits ..... Section 7
Transmission Offset Plates ..... Section 7
Transmission Rebuild Parts ..... Section 7
Transmission Shaft Support ..... Section 7
Transmission Shafts ..... Section 7
Transmission Shifter Parts ..... Section 7
Transmission Trap Doors ..... Section 7
Trim Rail ..... Section 11
Triple Tree Hardware ..... Section 3
Triple Trees ..... Section 3
Turn Signals & Kits ..... Section 1

V

Valve Guide Seals ..... Section 6
Valve Guide Tools ..... Section 6,12
Valve Guides ..... Section 6
Valve Seats ..... Section 6
Valve Spring Collars ..... Section 6
Valve Spring retainers ..... Section 6
Valve Springs ..... Section 6
Valve Stem Covers ..... Section 5
Valve Stems ..... Section 5
Valves ..... Section 6
Velocity Stacks ..... Section 8
Vise Insert/Aluminum ..... Section 12
Visors ..... Section 1
Voes Switch ..... Section 9

W

Washer Kits ..... Section 13
Washers/Countersunk ..... Section 13
Washers/Flat ..... Section 13
Washers/Lock ..... Section 13
Wheel Bearing Grease ..... Section 5,12
Wheel Bearing Seals ..... Section 5
Wheel Bearings ..... Section 5
Wheel Hubs ..... Section 5
Wheel Parts ..... Section 5
Wheel Spokes ..... Section 5
Wheel Weights ..... Section 5,12
Wheels ..... Section 5
Wide Tire Kit ..... Section 2
Windshields ..... Section 11
Wiring Accessories ..... Section 1
Wiring Harnesses ..... Section 1
Wrist Pin Clip ..... Section 6

Electrical Batteries, Wiring, Lights Starter Motors,



ELECTRICAL PARTS &
ACCESSORIES
INCLUDING
HEADLIGHT & TAILLIGHT
BRACKETS, LICENSE PLATE
HOLDERS, & HORNS.

1

A. *THUNDERVOLT® BATTERIES*

Maintenance-free 12V motorcycle batteries featuring gas recombination technology. These 20 amp hour batteries have 270 cold cranking amps producing a high rate of discharge current, giving consistent starting and excellent reserve capacity. **SOLD EACH**



PART NO.	APPLICATION / YEARS	OEM NO.	JIS NO.	VOLTS	COLD CRANK AMPS	AMP HOURS	LENGTH	WIDTH	HEIGHT	ASSY
MAINTENANCE-FREE BATTERIES										
1-110	Custom application. This is a very small battery; excellent for use where space or height is an issue. See example photo above.	N/A	CTZ14S	12	230	11	6"	3-7/16"	4-3/8"	
1-117	YTX16-BS			12	230	14	6"	3.4375"	6.375"	- +

B. *BATTERY TENDER*

Battery Tender Plus is a 1.25 amp battery charger without the damaging effects of a trickle charger. Includes quick-connect harness for hard-to-reach areas. Requires 115 VAC.

1-105 Battery Tender Plus; 12V @ 1.25A. **SOLD EACH**

Battery Tender Junior. High efficiency California & Oregon compliant. Includes ring terminals and alligator clips with BLACK QDC.

1-104 Battery Tender Junior; 12V @ .750 A. **SOLD EACH**

Battery Tender Junior 800 is a compact and fully automatic charger that works with any 12 volt Lithium, Lead Acid, AGM or Gel Battery.

- Output: 12V @ 800mA
- Charger weight: 1 lb
- Size: 4" x 2" x 1.37"
- Plugs directly into the wall
- ISM™ microcontroller constantly updates charge sequence for smooth transitions between charging steps
- Spark proof
- Short circuit protected
- Reverse hook-up protection
- Safety timer
- Selectable for AGM, flooded, GEL, or lithium (LiFePO4) batteries
- Includes Alligator Clips and Fused Ring Terminals
- 5 Year Manufacturers Warranty

1-106 Battery Tender Junior; 12V @ .750 A. **SOLD EACH**



B

1-105



1-104



1-106

A. *THUNDERVOLT® AGM BATTERIES*

Ultima®'s AGM Thundervolt® batteries are the highest performance batteries we offer today! These are an industry first, with a direct fit aftermarket replacement for OEM# 65989-97A. These batteries provide some of the highest power ratings available in the Aftermarket.

FEATURES:

- Patented post design reduces internal battery resistance by replacing 3 internal connections with 1.
- Flush mount, threaded terminals allow for easy connection to bike terminals.
- Nonspillable, sealed AGM Valve Regulated Lead Acid (VRLA) design is maintenance free and meets all requirements for shipment via air carrier.
- Rugged construction has been lab tested and field tested to ensure long life, even in demanding V-Twin applications.
- Higher AH capacity than OEM means more starting capacity before wearing battery down, particularly useful for those stubborn steeds.
- Manufactured by an ISO 9001:2000 registered factory
- Patented Cast-On-Stip (COS) manufacturing technology ensures consistent long battery life.

A



1-140

Ultima® Part No.	OEM Part No.	Applications
1-140	65989-97B	Softail® 1997/later, XL 1997/2003, Dyna® 1997/later, VROD (except VRSCR) 2007/later
1-141	66007-84	FL & FLH models 1965/1984. Sportster® models electric start 1967/1978, except XLCR.
1-142	66010-97B	FLH, FLT 1997/later
1-143	65958-04	XL models 2004
1-144	65989-90B	Dyna® & Softail® models 1991/1996
1-145	65991-82B	Electric start FX and FXR 1973/1994; XLCR 1977/1978, XL models 1979/1996; Softail® models 1984/1990; FXR models 1999/2000
1-146	66010-82B	FLHR, FLHT, and FLT Touring models 1980/1996
1-147	65948-00	VRSC models 2002/2006, VRSCR 2007
1-148	66006-70	FX & XL models (kickstart only) 1970/1978.

1-150 V-Twin Terminals. Replacement terminals & screw for above battery. Except **1-148** & **1-141**.



1-142



1-146


1-150

1

A



B





C



CHROME PLATED

D

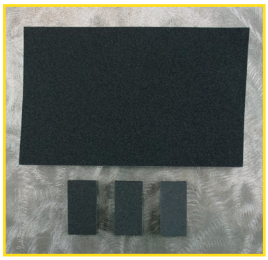

BLACK NEOPRENE FOAM

E



F



CHROME PLATED

G



ALL PARTS CHROME PLATED

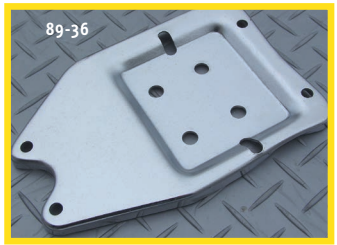

A. *MOTORCYCLE JUMPER CABLE*

The answer to starting that bike with a dead battery & no kick starter. This set of heavy duty cables measures over 5 feet long and is still compact enough to carry with you.

97-5 Jumper cables. SOLD EACH

B. *BLACK RUBBER BATTERY TRAYS*

Custom black rubber battery trays available in 2 sizes.

78-1 Black NBR rubber battery tray, 6.40" x 7.15". SOLD EACH
78-3 Black NBR rubber battery tray, 4.00" x 8.00".

C. *BATTERY CARRIER & STARTER MOTOR BRACKET FOR FXE*

14-26 Fits FXE 1973 thru 1984. OEM 66225-73. SOLD EACH

D. *BATTERY COMPARTMENT CUSHION KITS*

Cushion kit is ideal for battery boxes & custom oil tanks. Pure neoprene closed cell foam rubber is non-absorbent & comes with adhesive backing. This cushion keeps vibration, the main cause of cracked batteries, to a minimum.

78-173 5" x 8" For FLH 1965 thru 1984 or cut to size. SOLD EACH
78-217 4" x 6-1/2" For FXE 1973 thru 1984.

E. *BATTERY CUSHION FOR SOFTAIL®*

Fits 1985 & later Softail® oil tanks. Molded rubber. Will work on all years Softail®.

78-322 Battery cushion. OEM 66210-85B and OEM 66210-97. SOLD EACH

F. *BATTERY TRAY MOUNT*

Chrome plated battery tray mount.

14-28 Fits FLH 1965 thru 1986. Replaces OEM 66212-65. SOLD EACH

G. *BATTERY PLATES, PADS, RODS & BRACKETS*

For H-D® Big Twin 1937 thru 1964. All parts chrome plated.

89-3 Battery cover. OEM 66373-36. SOLD EACH
89-36 Battery/oil tank plate. OEM 62575-36. SOLD EACH

A. *BATTERY COVER FOR FXD*

89-501 For FXD 1997 & later. Replaces OEM 66375-99. SOLD EACH

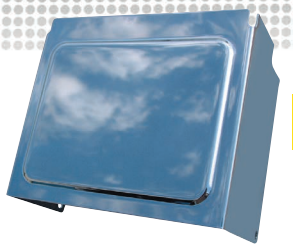

B. *WRAP AROUND BATTERY COVERS*

89-35 For electric start Super Glide® 1973-1986 except FXR & FXRS, also Sportster® 1982-2003. Plain. SOLD EACH

89-255 Fits FL, FLH, FLH-80, Classic, 1970-later. Ribbed. OEM 66378-70.

89-22 For BSA/Triumph, Sportster® XLCH (kickstart) 1970 thru 1978, and Super Glide® kickstart. Plain.

89-143 For Sportster® 1980 & 1981. Plain.

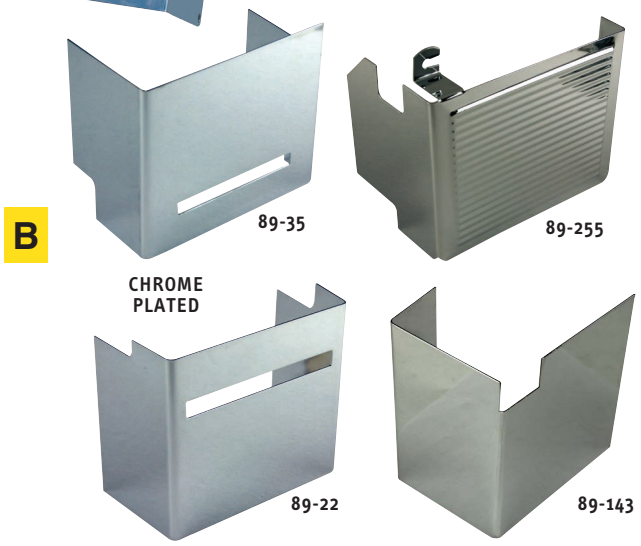

C. *BATTERY STRAPS*

Part No. **5-129** & **5-220** are made of black rubber. The other straps are manufactured to meet or exceed H-D® specifications from 18 gauge stainless steel with plated eye bolts to prevent rust. SOLD EACH

5-30 1967 Thru 1978 XLH & Sportster®. OEM 66470-67.

5-31 1970 And later FLH, FL & H-D® 74". OEM 66383-70.

5-32 1970 And later XLCH & FX. OEM 66470-70.

5-33 1973 And later all FX, electric start and 883cc, 1100cc & 1200cc Evolution®. OEM 66476-73.

5-129* 1984/1991 FXST & FLT and 1979 Sportster®. OEM 66105-77.

5-220* 1992/1999 Softail®. 2 Piece. OEM 66109-93 & 66111-93.

*Part No. **5-129** & **5-220** are interchangeable.



D. *BATTERY TOP COVERS*

89-120 For FL and FLH. OEM 66370-65. SOLD EACH

89-119 For FXE, FXS, FXEF & Low Rider®, also 883cc 1100cc & 1200cc Evolution®. OEM 66367-73.

89-181 All FX & Sportster® 1970 thru early 1978. Kick start only. OEM 66369-70.

89-230 For XLH 1967 thru 1978. OEM 66369-67.



E. *BATTERY CARRIER TRAYS*

Replacement battery carrier complete with battery pad, rubber mounting studs, brackets. Hardware included with kits.

14-20 Fits FL 1974 thru 1979. OEM 66204-74. SOLD AS KIT

14-21 Fits FXE 1973 thru 1983. OEM 66191-73.





1

ULTIMA® PREMIUM BATTERY CABLES

GET THE MOST FROM YOUR STARTER AND BATTERY WITH ULTIMA® CABLES



Check out our new line of premium battery cables!
Available in clear braid & clear smoked.

- Super flexible multi-stranded therefore not affected by V-twin vibration.
- Pure oxygen free copper stranding individually tinned preventing corrosion.
- Heavy duty copper lugs silver plated for long lasting trouble free connections.
- Minimum voltage drop for sure starting.

A. ULTIMA® CABLE SETS

SMOKE PART NO.	CLEAR PART NO.	YEAR	GROUND LENGTH	BATTERY TO SOLENOID / STARTER	SOLENOID TO STARTER
ALL FLH & FLT DRESSER MODELS					
18-701	**18-731**	1965 / 1979	9"	16"	16"
18-702	**18-732**	1980 / 1988	9"	30"	30"
18-703	**18-733**	1989 / 1992	33"	33"	—
18-704	**18-734**	1993 -LATER	13"	14"	—
ALL FXST & FLST SOFTAIL®					
18-705	**18-735**	1984 / 1988	8"	17"	15"
18-706	**18-736**	1989 / 2001	10"	12"	—
18-707	**18-737**	1989 - LATER	10"	14" X-LONG	—
ALL FXR LOW RIDER®					
18-708	**18-738**	1982 / 1988	12"	16"	16"
18-709	**18-739**	1989 - LATER	12"	16"	—
ALL FXD DYNA®					
18-710	**18-740**	1991 / 2002	10"	15"	—
18-711	**18-741**	2003 - LATER	15"	16"	—
ALL SPORTSTER®					
18-712	**18-742**	1981 - LATER	11"	16"	—

B. ULTIMA® INDIVIDUAL CABLES — SOLD EACH

END LUG SIZES		8"	9"	10"	11"	12"	13"	14"	15"	16"	17"	30"	33"
1/4" and 5/16" lugs	SMOKE	**18-713**	**18-714**	**18-715**	**18-716**	**18-717**	**18-718**	**18-719**	**18-720**	**18-721**	**18-722**	**18-723**	**18-724**
	CLEAR	**18-743**	**18-744**	**18-745**	**18-746**	**18-747**	**18-748**	**18-749**	**18-750**	**18-751**	**18-752**	**18-753**	**18-754**
1/4" and 3/8" lugs	SMOKE									—	—	—	
5/16" and 3/8" lugs	SMOKE								—	—		**18-730**	
	CLEAR									—		**18-760**	



C. ELECTRIC CABLES

POSITIVE BATTERY CABLES SOLD EACH

18-106 Battery positive terminal cable for Super Glide®, all models 1971 thru 1981. Measures center to center 16-3/4". Cable end holes are 3/8" & 5/16". OEM 70069-65A.

18-107 Battery positive terminal cable for Sportster® 1975 thru 1977. Measures center to center 13". Cable end holes are 3/8" & 5/16". OEM 70097-75.

NEGATIVE BATTERY GROUND STRAP/CABLE

18-108 Ground cable for FL & FLH, 1965 thru 1978. Measures center to center 9-1/4". Cable end holes are 3/8" & 5/16". OEM 70209-65. SOLD EACH

A. *ULTIMA® PLUS ELECTRONIC WIRING SYSTEM*

The newest version of Ultima®'s complete wiring systems. This one is even smaller & more advanced, includes everything needed for installation. Measures 1-13/16 x 3-7/8 x 1. Instructions included and available online @ www.ultimaproducts.com.

18-533 Complete kit. SOLD AS KIT

B. *ULTIMA® SIMPLE WIRING MODULE*

Ultima®'s simple wiring module was designed to help simplify wiring when only the bare necessities are needed. No larger than a standard starter relay, the module provides 30 amps secondary protection to the motorcycle's electrical system. Has a built-in starter relay. Allows usage of a low amperage ignition switch. Has diagnostic L.E.D.s for ignition and start circuit. Compatible with electronic compression releases. Instructions included and available online @ www.ultimaproducts.com.

18-536 Ultima® Simple Wiring Module. SOLD EACH

A



C. *ULTIMA® COMPLETE ELECTRONIC WIRING SYSTEM*

This wiring system uses all the latest high tech electronics to make wiring your bike easier. All flasher, relay & circuit interrupters are included in one small package that can be mounted in a wide variety of locations. This module and its plugs are waterproof and LED's are used to troubleshoot problems. Kit includes all wires, connectors, module & heat shrink tubing. Instructions included and available online @ www.ultimaproducts.com.

18-530 Ultima® wire harness kit. SOLD AS KIT
18-531 Indicator light harness for above part No. **18-530** wiring system. 6 Ft. long; can be cut to desired length. SOLD EACH
18-535 Replacement starter/headlight relay. SOLD EACH

B

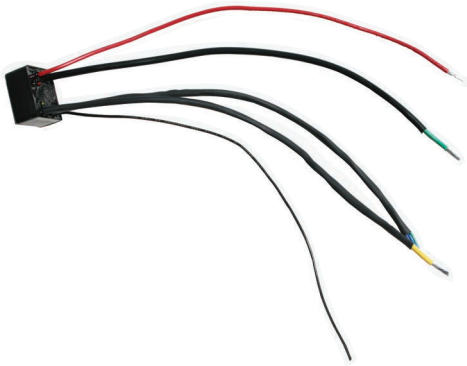

D. *ULTIMA® CUSTOM WIRING HARNESS FOR BIG TWIN CUSTOMS*

This wiring harness is perfect for custom motorcycles using 1985 thru 1995 or 1996 & later handlebar controls. Harness is a complete main wiring harness and installs easily for a clean, custom look. Harness is complete to include starter relay, turn signal flasher, circuit breakers and all necessary pin connectors to install with either 1985 thru 1995 or 1996 & later handlebar controls. Use this kit with handlebar wiring harness part No. **18-230**, **18-231**, **18-332** and **18-331**.

18-346 Complete custom main wiring harness. Fits custom FX models 1985 & later. SOLD AS KIT

C



D

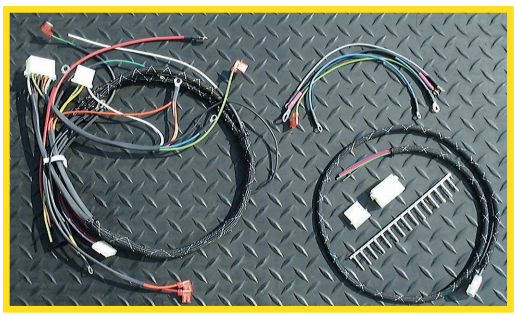

RIGHT H-BAR GROUND IS MAIN GROUND

1

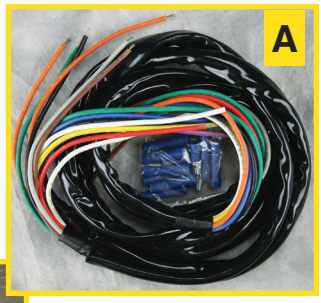

A. *EXTENDED WIRING HARNESSES*

12" extended wiring harness for handlebars. Color coded. Kit includes connectors and clips.

18-104 Fits 1973 thru 1981. SOLD AS KIT
18-222 Fits 1982 thru 1990.

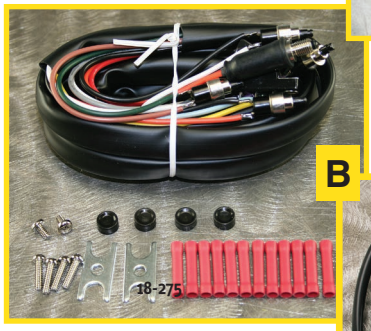

18-275

B. *HANDLEBAR WIRING HARNESS KIT*

Handlebar wiring harness kits come 48" long with color coded wires and cover sheath. Switches are attached for both right and left sides.

Fits Big Twin 1972 thru 1981 and Sportster® 1973 thru 1981.
18-275 With Black switches. SOLD AS KIT

Fits Big Twin and Sportster®, 1982 thru 1995.
18-230 With Black switches. SOLD AS KIT
18-231 With Chrome switches.

Fits Big Twin and Sportster®, 1996 & later.
18-332 With Black switches. SOLD AS KIT
18-331 With Chrome switches.



18-230



18-332



18-331

C. *WIRING HARNESSES FOR LATE MODEL FX*

U.S.A. MADE. If you're building from the ground-up or replacing stock wiring, these kits are the hot ticket. Connectors, wire lengths, and wire color codes are just like stock. Kits include main harness, handlebar wiring, rear lamp wiring, and dash harness where applicable.

18-333 For FXST 1989 thru 1990. SOLD AS KIT
18-330 For FXST 1991 & 1992.
18-335 For FXST 1993 thru 1995.
18-336 For FXR/S 1989 thru 1990, without dash.

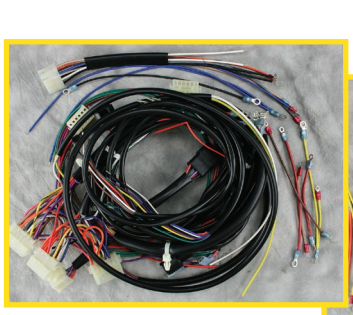

18-330

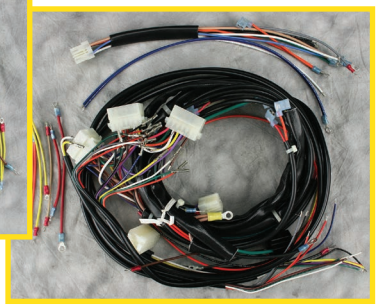

18-333

D. *HANDLEBAR CONTROL SWITCHES FOR H-D® 1971 THRU 1981*

These replacements for OEM units are available factory color black or chrome as listed below.

CHROME	BLACK	OEM NO.	SOLD EACH DESCRIPTION
17-87	**17-53**	71547-75	Rocker switch run/off.
17-88	**17-54**	71546-75	Rocker switch hi/low.
	17-49	72001-69A	Handlebar stoplight switch.
	17-51	71484-72	Switch for starter, horn, or turn signal on H-D® handlebar controls.
17-89	**17-50**	71535-72	Long button cap for turn signal handlebar switch.
17-90	**17-52**	71534-72	Short button cap for turn signal handlebar switch.

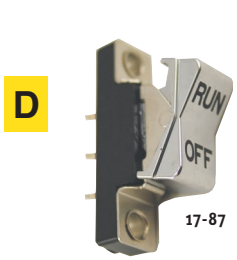

17-87



17-49



17-51



17-89



17-50



17-90



17-52

B. *HANDLEBAR CONTROL SWITCHES FOR BIG TWIN & SPORTSTER® 1982 THRU 1995 AND 1996 & LATER*

Switch assemblies with color coded wire already soldered for easy installation. Available in factory color black or chrome style.

1982 THRU 1995

CHROME	BLACK	OEM NO.	DESCRIPTION
17-91	**17-95**	71589-92	Engine run/off, starter.
17-92	**17-96**	71591-92	Right turn switch.
17-93	**17-97**	71597-92	High/Lo, horn.
17-94	**17-98**	71599-92	Left turn switch.

1996 & LATER

CHROME	BLACK	OEM NO.	DESCRIPTION
	17-100	71590-96	Handlebar stoplight switch.
17-101	**17-105**	71589-96	Engine run/off, starter.
17-102	**17-106**	71591-96	Right turn switch.
17-103	**17-107**	71597-96	High/Lo, horn.
17-104	**17-108**	71598-96	Left turn switch.

SOLD EACH

B





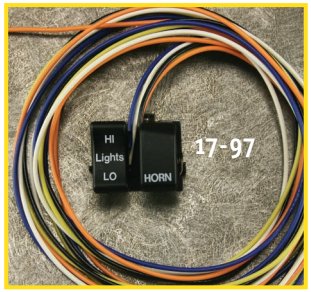

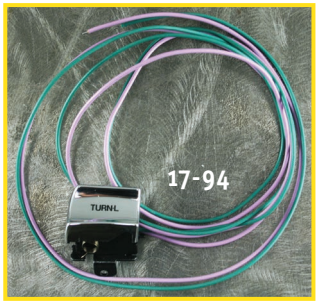









C. *HEADLIGHT RELAY*

Allows the use of a 1-wire (horn button). type switch to operate high/low beam headlights on 12V systems. Perfect for custom handlebar switch set-up.

17-116 Headlight relay. **SOLD EACH**

39-152 Headlight relay for 00'-03' FLT, 00'-09' Dyna® & Softail®. OEM 31522-00/00B/00C.

39-153 Headlight relay for 05'-08' Sportster®. OEM 31601-04.

C



1

A



17-63



39-144



39-147

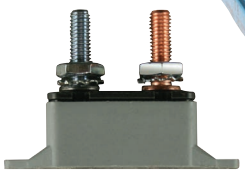

17-120



39-143

B



C



D



E





F



G

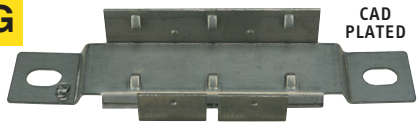

CAD PLATED

A. *CIRCUIT BREAKERS TYPE 1 CYCLING - AUTOMATIC RESET*

NOTES: PLASTIC VS METAL
Vibration...Plastic housings with mounting brackets are one-piece molded designs and are less prone to vibration. Metal housings with brackets are two-piece designs. The bracket is attached by spot welding and can be loosened by vibration.
Shorting Out...If a wire should loosen from a terminal on a plastic housing version, it will not short out against the housing as it may do with a metal housing.
Weight...The plastic housing is also lighter than the metal housing.

The following part numbers include single **U.S.A. MADE** circuit breaker with mounting bracket. SOLD EACH

METAL PART NO.	DESCRIPTION	PLASTIC PART NO.
17-78	Circuit breaker; 15 amp.	**17-120**
17-63	Circuit breaker; 20 amp.	**17-121**
17-79	Circuit breaker; 30 amp.	**17-122**

U.S.A. MADE circuit breakers for use with snap-in bracket (see right).

METAL PART NO.	DESCRIPTION
17-76	Circuit breaker; 15 amp. OEM 74589-73.
17-77	Circuit breaker; 20 amp.
17-62	Circuit breaker; 30 amp. OEM 74599-77.
39-143	Circuit breaker; 50 amp; 94'-96' XL, Sportster®. OEM 74600-94.
39-144	Circuit breaker; 15 amp; 94'-97' XL, 94'-96' FLT, 96'-99' Softail® & Dyna®. OEM 74587-94.
39-147	Circuit breaker; 40 amp; 97'-05' FLT. OEM 74600-97.

B. *FLASHER*

17-125 12V Rectangular flasher. For XL 1965 & later, FL 1965 thru 1984, FLT 1980 & later, FX 1971 & later and FXR 1982 & later. SOLD EACH

C. *ELECTRICAL RELAY*

Heavy duty multi use 14VDC electrical relay. Fits Big Twin & Sportster® models and custom applications.

53-695 Multi use electrical relay 14VDC. OEM 31504-91A. SOLD EACH

D. *MINI RELAY*

This mini relay can be used as a starter or headlight relay. Replacement relay for Ultima® and other aftermarket wiring modules.

18-535 Replacement starter/headlight relay. SOLD EACH

E. *TERMINAL BLOCK*

This **U.S.A. MADE** terminal block is another trick item for custom bikes that gives the wiring job a professional look. Available with 4 terminal studs. 10 - 24 Thread for long life. ABS base for rugged use.

17-81 Terminal block, 41/2" long. SOLD EACH

F. *ELECTRICAL TERMINAL BOX ASSEMBLY*

This quality reproduction terminal box is available pre-assembled, painted black & ready to install. They are properly insulated to eliminate grounding and include all necessary mounting hardware. The installation of this box and a new wire harness is a must when restoring the electrical system on Big Twins and 45", 1948-1969.

17-99 Terminal box assembly. SOLD AS KIT

G. *CIRCUIT BREAKER MOUNT BRACKET*

U.S.A. MADE rugged steel bracket with detents permit simple snap-in of circuit breakers. Holds two breakers. A must for the custom builder. Cad plated for rust-free long wear.

17-80 Circuit breaker mount bracket. SOLD EACH

A. *FUSE HOLDER*

18-18 **U.S.A. MADE** fuse holder. Complete with 6" of 16 gauge wire looped, and 20 amp fuse. SOLD EACH

B. *WATERPROOF FUSE HOLDER*

Ideal waterproof **U.S.A. MADE** fuseholder. Designed for applications where moisture is a problem. Cap has positive snap action for tight fit. 4" Leads (12 gauge). For mini fuse only. Fuses available separately below.

18-19 Waterproof fuse holder. SOLD EACH

Replacement mini fuse. Fits above part No. **18-19** waterproof fuse holder.

18-20 15 Amp fuse. SOLD EACH
18-21 20 Amp fuse.
18-23 30 Amp fuse.

A

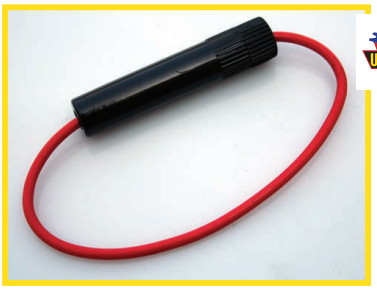

B



18-19

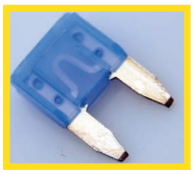

18-20

C



8-30



8-31

C. *BLACK HEADLIGHT ASSEMBLIES*

Our black headlights are constructed of top quality spun aluminum and are a great choice to enhance the look of your bike. They come with H4 55/60 W bulb and are available in several styles and sizes. Semi-gloss, granular finish.

8-30 Black headlight, tri bar, bullet, 4-1/2".
8-31 Black headlight, tri bar, bullet, 5-3/4".

1

A



B



D



F



G



CHROMED ALUMINUM HEADLIGHTS WITH OR WITHOUT TRI BAR

Our chromed aluminum spun headlights are a great choice for your bike. They come with or w/o a visor, with tri-bar, H4 55/60 W bulb and are available in several styles and sizes. SOLD EACH

A.

4-1/2" DIA. • 6-3/4" LENGTH

8-20 Headlight w/round visor, tri bar.
8-432 Headlight no visor, plain.
8-332 Headlight no visor, tri bar.

B.

5-3/4" DIA. • 9-1/2" LENGTH (Long Body)

8-21 Headlight w/round visor, tri bar.
8-41 Headlight w/round visor, plain.

C.

5-3/4" DIA. • 6-3/4" LENGTH (Custom)

8-251 Headlight w/o visor.
8-252 Headlight w/visor.

E. REPLACEMENT HEADLAMPS

Replacement headlamps, H4 55/60W bulb included, available with or without tri bar.

4-1/2" DIAMETER

8-436 Lamp unit, tri bar. SOLD EACH
8-437 Lamp unit, plain.

5-3/4" DIAMETER

8-438 Lamp unit, tri bar. SOLD EACH
8-439 Lamp unit, plain.

E



F. 4-1/2" LATE MODEL SPOTLIGHT

A chrome plated reproduction of 1962 & later FL type spotlight. SAE Y97 approved with H3 12V, 55 watt halogen bulb. One wire lead.

8-194 4-1/2" Late model spotlight, OEM 68652-64B. SOLD EACH
8-144 Replacement composite light beam with 35/35 Watt bulb.

G. 5-3/4" HEADLIGHTS

Classically styled 5-3/4" chrome headlights come completely assembled. Includes blue high beam indicator and mounting block. DOT 9809 approved. 12V; includes a 55/60 watt H4 bulb. Brighter is better!

8-195 Bottom mount headlight. SOLD EACH
8-196 Side mount headlight.



A. *7" CHROME HEADLIGHT*

Beautifully chromed 7" diameter headlight. OEM style, bottom mount FL style is perfect for restoration or custom FL applications. Includes H4 55/60 watt bulb. No high beam indicator. DOT 9913-A approved.

8-197 7" headlight. SOLD EACH



B. *4-1/2" MINI HEADLIGHT*

Chrome plated mini headlight designed for use on highway bars as additional lighting. 12V, 30 Watt sealed beam, Hi-Lo indicator light, and bottom mount are all included. Parts also available separately.

8-137 Complete headlight with sealed beam. SOLD EACH
6-55 12V Indicator bulb only.

C. *CHROME SPOTLIGHT*

The below lights with diamond cut reflectors have 35/35 Watt bulb.

8-144 Replacement composite light beam with 35/35 Watt bulb SOLD EACH

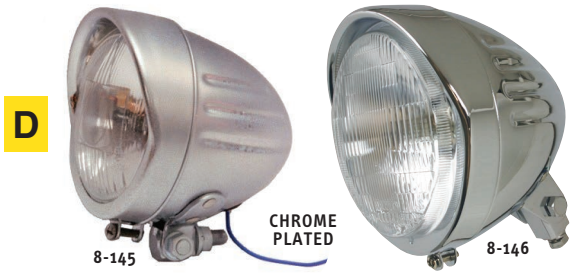

D. *BULLET STYLE HEADLIGHT & SPOTLIGHT WITH ACCENT LINES*

Chrome plated, 12V lights with bullet styling and ball mill style accent lines. 3/8-24 Bottom stud mount.

8-145 4.5" Spotlight. SOLD EACH
8-146 5.75" Headlight.



E. *SEALED BEAM HEADLAMPS*

"Hi-Lo" beam indicator light glows when high beam is on. 5.70" Diameter sealed beam.

8-16 12V Bottom mount sealed beam headlamp. Mounting bolt included. SOLD EACH
8-139 12V Bottom mount sealed beam headlamp with halogen motorcycle sealed beam.
86-69 Replacement chrome ring.
6-54 6V Replacement indicator bulb.
7-25 12V Replacement sealed beam. Clear, 5-3/4" Dia.



F. *5-3/4" STRETCHED HEADLIGHTS*

Complete stretched headlight shell assembly (less bulb) has a smooth contoured retaining ring and unique domed shape. Lights are sold **without** sealed beam. Parts also available separately.

8-151 For FXSTS Softail Springer® 1993 & later; stock replacement. SOLD EACH
8-152 For FXDWG, FXST & FXWG, 1980 & later and FXSTS 1988 thru 1992. With bates style tabs & mount block. Also for use on custom applications.



G. *SPORTSTER®/ SUPERGLIDE® STYLE HEADLIGHT*

8-78 Complete light without sealed beam for Sportster® 1954 thru 1973 and Super Glide® 1971 thru 1974. OEM 67733-72.
8-89 Complete light without sealed beam for Sportster® 1974 & later and Super Glide® 1975 & later. OEM 67743-75.

1

A. *SPOTLIGHT & BRACKETS*

Replacement spotlamp housing for OEM 68671-69. Used on 1965 & later Big Twin. Mounts like stock passing light.

8-138 Spotlamp with sealed beam. OEM 68671-69. SOLD EACH
8-95 Spotlamp housing only.

Spotlight mounting bracket sets. SOLD AS PAIR
11-54 For late FL, 1961 thru 1984. OEM 68603-62.
11-201 Springer style. For FLST 1984 & later. OEM 58092-87.

A

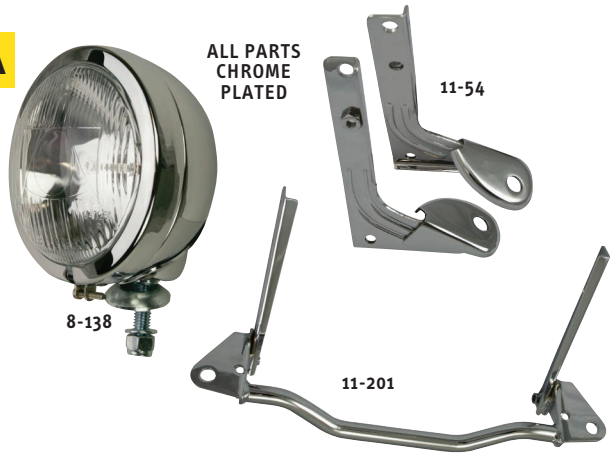

B. *PARTS FOR 7" FAT BOY® & HERITAGE® HEADLAMP*

7-45 Quartz unit 12V.
86-103 Mounting block kit (OEM 67768-86), and hardware.
86-104 Rim kit (OEM 68050-93, 68051-93, and three of 68052-93).

B

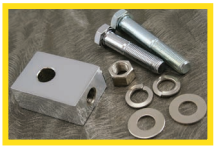
86-103



CHROME PLATED

C. *REPLACEMENT HEADLAMPS*

Replacement headlamps, H4 55/60W bulb included, available with or without tri bar.

4-1/2" DIAMETER
8-436 Lamp unit, tri bar. SOLD EACH
8-437 Lamp unit, plain.

5-3/4" DIAMETER
8-438 Lamp unit, tri bar. SOLD EACH
8-439 Lamp unit, plain.


7-45

C


TRI BAR


PLAIN

D. *CONVERSION HEADLIGHTS*

Headlight Conversions are exact replacements for sealed beam used on most big bikes. They provide substantially improved lighting with little or no modifying, at a modest cost. A dual filament bulb allows high or low beam operation. Quartz iodide/350,000 candlepower.

7-45* Quartz unit 12V, 7" dia., flat. SOLD EACH
8-480* Quartz unit 12V, 7" dia., round.
7-46* Quartz unit 12V, 5-3/4" dia., flat.
8-479* Quartz unit 12V, 5-3/4" dia., round.

*For 6V applications — order 12V conversion kit and replace bulb with H4 bulb.

D


7-45


8-479



A. *HEADLIGHT HOUSING KIT*

Update the look on your 1986 through 1999 Heritage Softail® or Fatboy with this chrome headlight housing kit.

Comes with all the necessary brackets and hardware to mount to the stock triple trees.

89-348 Headlight housing kit — SOLD AS KIT



CHROME PLATED

B. *FORK TIN FOR HERITAGE SOFTAIL® & FAT BOY®*

Chrome plated steel tins to give that "antique" look. Chrome hardware included.

89-349 Fits all Heritage Softail® and Fat Boy®, 1986 & later. Replaces OEM 67808-86, 67816-86 & 67820-86. — SOLD AS KIT



C. *HEADLIGHT HOUSING FOR FL*

89-257 For FL 1960 & later. OEM 67847-60 & OEM 67848-60. — SOLD AS SET

86-70 Headlight rim, gasket & spring clips. Fits FL & FLH 1960 thru 1980. OEM 67712-60A. — SOLD AS KIT

89-107 Visor for all 7" Big Twin headlights 1949 & later. OEM 67752-77T. — SOLD EACH

D. *FRONT FORK FOR FL*

Chrome plated or stainless steel.

89-278 Chrome plated rear left fork panel. — SOLD EACH



F. *HEADLIGHT VISOR COVERS*

Steel stamped cover only for headlight visor.

89-83 Cover with no cut out for indicator lights. — SOLD EACH

89-84 Cover with cut out for indicator lights.



1

A. *V-STYLE SPOTLIGHT BARS*

Chrome plated spotlight bars with distinctive V-styling. Check out the V-style rear signal kit on page 1-36.

11-147 Fits FLST 1986 thru 2003. SOLD EACH
11-148 Fits Road King® 1994 thru 2003.

B. *HEADLIGHT MOUNTING PLATE*

11-113 Fits FXST/C 1986 & later. SOLD EACH
OEM 67773-80A.

C. *HEADLIGHT BRACKET FOR SPORTSTER® & FLH WIDE GLIDE®*

11-40 For early Sportster® & Wide Glide®. SOLD EACH

D. *SINGLE HEADLIGHT BRACKET*

Headlight bracket to fit bolts spaced 3-1/4" to 5-3/4" apart. Fits bolt size 5/8" or smaller. 12" Hole for headlight.

11-10 Headlight bracket. SOLD EACH

E. *SIDE MOUNT BRACKETS*

Beautiful brackets for mounting a custom side mount headlight. 3/8" Hole for headlight bolt.

11-26 Two adjustment slots to fit any size fork tubes except Wide Glide®. SOLD AS PAIR

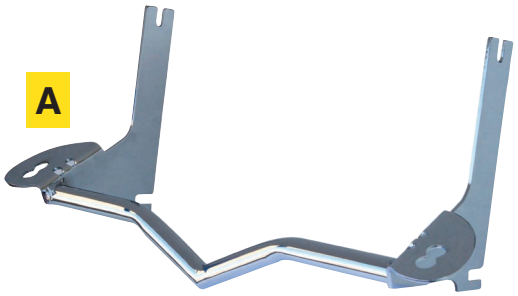



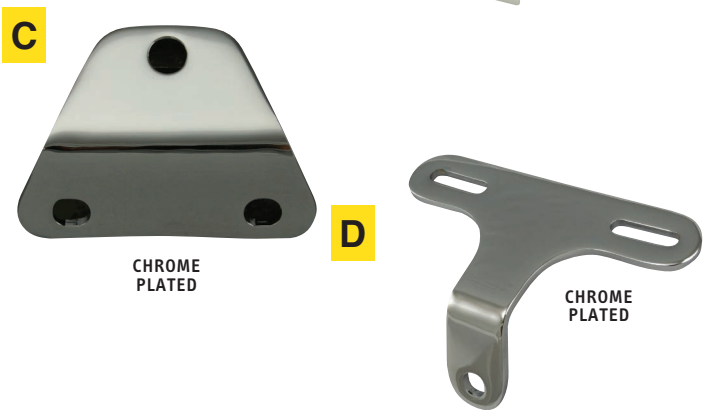



A



6-68

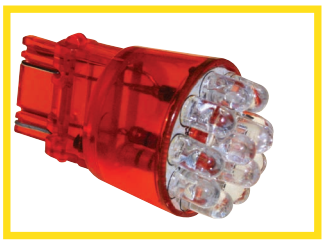

6-113

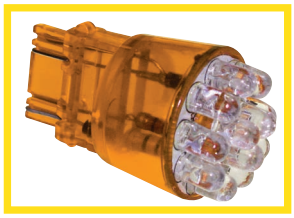

6-112

B

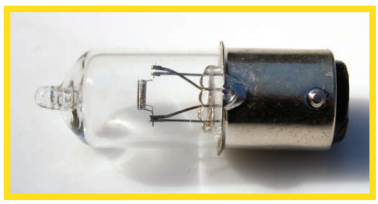

C

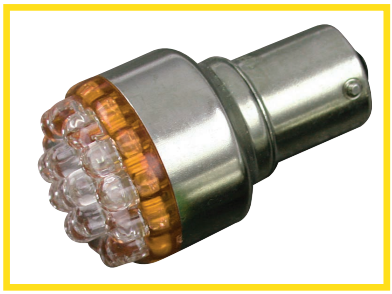

D

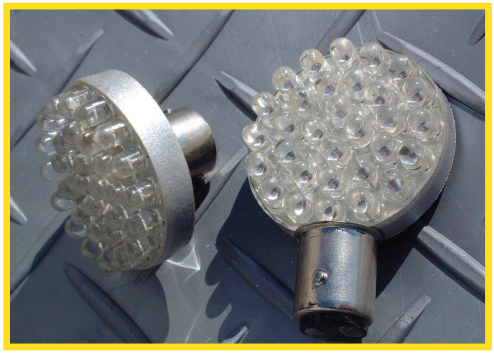

STRAIGHT ANGLED

A. *WEDGE MOUNT LED BULBS*

Stock style wedge mount bulbs for late 2003 applications.

6-68 3156 Wedge mount single element. SOLD EACH

Custom wedge mount bulbs. SOLD EACH

6-112 Wedge mount single element Amber.
6-115 Wedge mount single element Red.
6-113 Wedge mount dual element Red.
6-114 Wedge mount dual element Amber.

B. *MEGA BRIGHT TAILLAMP BULB*

"Mega Bright" halogen taillamp could help keep you from getting run over. 15 Watt taillight is 800% brighter than standard bulbs, and stop light is 50 watts — 3 times brighter than stock. One of the best safety items you can buy!

6-64 "Mega Bright" halogen bulb. Fits right into the stock bulb base. SOLD EACH

C. *LED BULBS*

PART NO.	NO. OF PIECES	COLOR	FILAMENT	REPLACES
6-104	19	Amber	Single	1156

SOLD EACH

D. *L.E.D. BULBS*

Water and vibration proof. Will last up to 100,000 hours. 31 LEDs per bulb. 1-5/8" O.D.

NOTE: Dual contact = 1157, single contact = 1156.

DESCRIPTION	RED LEDS	AMBER LEDS
Angled, single contact	**6-5**	**6-9**
Angled, dual contact	**6-6**	**6-10**
Straight, single contact	**6-3**	**6-7**
Straight, dual contact	**6-4**	----

SOLD EACH

1

SURFACE MOUNTED DIODE (SMD) LIGHT BULBS



style 3156



style 3157



style 1156



style 1157

SURFACE MOUNTED DIODE (SMD) LIGHT BULBS

These SMD light bulbs are the latest design in LED technology, SMD bulbs have better light emissions with high reliability and have very good resistance to road vibrations unlike stardard bulbs. Each bulb has 27 separate SMD LEDs fitted and comes available in white, amber or red color.
Available in the four popular bulb styles **3156** / **3157** & **1156** / **1157**.
Sold each

6-120 Single filament SMD bulb 12v white, type 3156
6-121 Single filament SMD bulb 12v amber, type 3156
6-123 Single filament SMD bulb 12v red, type 3156

NEW!

6-124 Dual filament SMD bulb 12v white, type 3157
6-125 Dual filament SMD bulb 12v amber, type 3157
6-126 Dual filament SMD bulb 12v red, type 3157

6-127 Single filament SMD bulb 12v white, type 1156
6-128 Single filament SMD bulb 12v amber, type 1156
6-129 Single filament SMD bulb 12v red, type 1156

6-130 Dual filament SMD bulb 12v white, type 1157
6-131 Dual filament SMD bulb 12v amber, type 1157
6-132 Dual filament SMD bulb 12v red, type 1157

A. *CUSTOM CATEYE TAILLIGHTS W/ LED ARRAY*

This cateye taillight is complete with LED array. Available in two lens colors — either red or clear. Although the LED array appears to have clear elements, when lit, the clear lens taillight shines red. Mounting screws 2" center to center. Will mount on the **CHROME HORSE®** stainless steel side mount part No. **11-120** seen on page 1-25.

8-185	12V LED taillight with clear lens.	SOLD EACH
8-186	12V LED taillight with red lens.	



B. *CUSTOM CATEYE TAILLIGHTS*

Beautiful taillight with large license illumination lens. Flat back for universal mounting. Mounting screws 2" center to center.

8-79	12V Taillight with plain lens.	SOLD EACH
8-136	12V Taillight with blue dot lens.	
86-71	Red plain lens only.	
86-98	Blue dot lens only.	



C. *MALTESE SHAPED TAILLIGHTS*

Chrome plated die cast 12V taillight. Flat back with 2" center to center holes for easy mounting.

8-132	Standard bulb illumination.	SOLD EACH
8-215	With LED illumination.	



D. *CATEYE L.E.D. TAILLIGHT ASSY.*

Custom cateye LED taillight assy. w/turn signal function.

8-341	Cateye L.E.D. taillight assy.	SOLD EACH



E. *THE ORIGINAL CHOPPER TAILLIGHT*

The first chopper builders choose these taillights for the combination of toughness and small size. They held up well on "bone-rattlin" hard-tails. Die cast, chrome plated. Due to small size of lens, use only for show and restoration purposes. Not DOT approved.

11-143	12V Taillight, red lens, conventional style taillight bulb.	SOLD EACH
8-302	12V Taillight, red lens, LED illumination.	
8-301	Same as above part No. **11-143** except polished.	
86-155	Replacement lens for above taillights.	



F. *EXTENDED LENS SPARTO TAILLIGHT*

This sparto taillight features a new extended round lens for a new look. Hardware included.

11-131	Sparto taillight, extended lens.	SOLD EACH



1

A



B



8-232



8-233

C



CHROME PLATED

CHROME PLATED

D



E



CHROME PLATED

8-131

F



A. *BEEHIVE TAILLIGHT 1939 thru 1946*

Includes mounting gasket and license mount. 12V.

8-70 Taillamp. OEM 68002-47. SOLD EACH
86-45 Red lens only.

NOTE: Taillight not recommended for street use.

B. *DRILLED BEZEL TAILLIGHTS*

Taillight features a clear lens with super bright red LED's, license plate illumination, and hardware is included.

8-232 Drilled bezel taillight, black. SOLD EACH
8-233 Drilled bezel taillight, chrome.

C. *WIDE TOMBSTONE TAILLIGHT WITH LED ARRAY*

Our new wide tombstone LED taillight has the styling of the original equipment taillight except it has been redesigned to fit 1973 & later OE fenders. Fits all Big Twin models 1973 thru 1999 (except FLSTS & models with Fat Bob® style rear fenders) and Sportster® models 1973 thru 1998. Models with fender mounted turn signal light bar require relocation of the light bar.

8-192 Wide tombstone LED taillight. SOLD EACH
8-198 Same as above part **No.8-192** except with conventional style taillight bulb.

D. *CUSTOM CATEYE TAILLIGHT & BRACKET*

Die cast, chrome plated fender mount bracket is included.

8-289 12V LED taillight with clear lens. SOLD EACH

E. *CUSTOM FAT BOB® STYLE TAILLIGHT & BRACKET KITS*

Custom Fat Bob® style taillights come complete with a chrome plated mounting bracket. Fits FXWG and FXST models 1980 & later.

8-131 Complete taillight kit with custom style. taillight mounting bracket. SOLD AS KIT

F. *DIAMOND L.E.D. TAILLAMP*

Die cast chrome with LED array.

8-285 Custom taillight. SOLD EACH

A. *FLUSH MOUNT TAILLIGHT*

Beautiful all-metal, show chrome housing with the latest in taillight lens optics. Strong flush mounting. Includes 12V bulb.

8-73 Taillight. SOLD EACH

B. *BLUE DOTS*

Bring back that nostalgic look by customizing any lens with the Blue Dot. Can be installed by drilling hole in lens and is held in place by chrome ring. May not be approved in some states.

86-72 Chrome ring & blue jewel. SOLD EACH

C. *EARLY H-D® STYLE TAILLIGHT & LENS*

Original style taillight in chrome, with 12V bulb. Fits 1955 thru 1972 Sportster®, Big Twin, and many custom applications.

8-59 Chrome plated taillight. OEM 68010-64B. SOLD EACH
86-41 Red lens only. OEM 68090-69.

D. *LICENSE PLATE BUSHING & SPACER KIT*

License plate bushing and spacer kit. For use with an axle mount license plate bracket. Reduces an axle mount license plate bracket hole from 1" dia to 0.787" (or 20mm) dia. Please see the list of license plate brackets in section 1.

40-710 License plate bushing & spacer kit. SOLD EACH

E. *TOMBSTONE TAILLIGHT*

Tombstone taillights are available in both standard 12V bulb or with LED array. Both are all metal replica of H-D® early style taillight used as original equipment on 1947 thru 1954 models, OEM 68003-47T. Superbly crafted & chromed. Universal fender mounting for most applications. Includes chrome plated license mount, black rubber mounting gasket for paint protection, and either 12V bulb or LED array.

8-56 Complete taillight with 12V bulb. OEM 68003-47. SOLD EACH
8-191 Complete taillight with LED array.
86-34 Red replacement lens. OEM 68090-47.

NOTE: Taillight not recommended for street use.

F. *VINTAGE TEARDROP TAILLIGHT REPLACEMENT LENSES*

86-137 Replacement red lens for Teardrop Taillight (No. **8-288**)



1


86-132


8-74
CHROME
PLATED


86-133


86-42


86-79


86-131


86-154


86-130

H-D® STYLE TAILLIGHT LENS

Original style taillight for XL, FX, and all Big Twins 1973 thru 1999.

8-74	Taillight with 12V bulb. OEM 68008-73.	SOLD EACH
86-132	Clear lens only. Fits 1957 thru 1972 FL & XL.	
86-133	Clear lens only. Fits 1973 thru 1998 FL, FX & XL.	
86-42	Lens only, plain. OEM 68034-77.	
86-79	Lens only with Blue Dot installed.	
78-169	Gasket only. OEM 68123-73.	
86-131	Lens only, for 1999 thru 2003. OEM 68140-99A.	
86-154	Lens only, fits late 2003 & 2004 wedge bulb.	
86-130	Laydown style lens only, for 1999 thru 2003.	
86-151	Laydown style lens only, with license lens facing up. Fits late 2003 & 2004 wedge bulb.	
86-153	Laydown style lens only, with license lens facing down. Fits late 2003 & 2004 wedge bulb.	
86-134	Clear laydown style lens only, with license lens facing down. Fits 1973 thru 1998 and 1999 FLST.	
86-152	Clear laydown style lens only, with license lens facing down. Fits late 2003 & 2004 wedge bulb.	
86-135	Clear lens with reflector assy. Fits 1999 thru 2003 FLT.	
86-136	Clear laydown style lens with reflector assy. and with license lens facing up. Fits 1999 thru 2003 FLT.	
86-150	Clear laydown style lens with license lens facing up. Fits late 2003 & 2004 wedge bulb.	


86-151


86-153


86-134


86-152


86-135


86-136


86-150

A. CUSTOM TAILLIGHT VISOR

Chrome molded taillight visor with four slots that will dress up the rear taillight.

89-397 Taillight visor for Big Twin and Sportster® 1973 thru 1999, except FXST and FXWG. SOLD EACH

A



CHROME PLATED

B. LAY DOWN LICENSE PLATE BRACKET

Die cast chrome plated license plate bracket has 3 hole mounting like stock H-D® bracket. Rubber spacers help eliminate vibration, and lets you adjust plate angle.

11-96 Fits all H-D® models with 3 or 2 hole mounting. Can be used on many custom applications. SOLD EACH

B

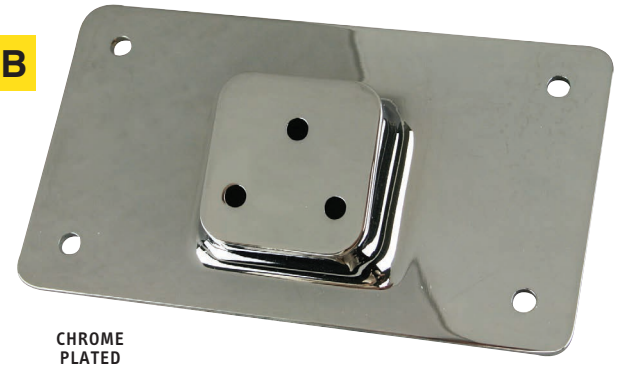

CHROME PLATED

C. CHROME LICENSE PLATE HOLDERS

Chrome license plate holder used on most model H-D®. Mounts in stock location of original.

11-44 License bracket; 2 hole. OEM 59995-55A.

11-99 License bracket; 3 hole. OEM 59998-75T.

C



11-44

CHROME PLATED



11-99

1

A



A. *DIE CAST LICENSE FRAME WITH LIGHTS*

Features custom built-in lights with amber lenses that can be used as custom turn signals or marker lights. Accepts 7.25" x 4.25" license plates. SOLD EACH

11-122 Die cast, chrome plated aluminumlicense frame.

B

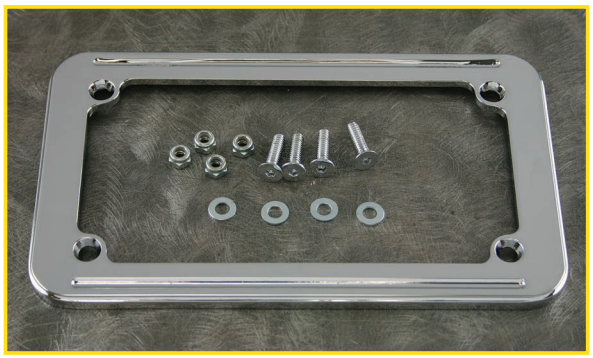

CHROME
PLATED

B. *LICENSE FRAME FITS 7" X 4" LICENSE PLATES*

11-115 License plate frame with bolt kit. SOLD EACH

C. *EAGLE LICENSE PLATE FRAME*

This custom license plate frame is beautifully chrome plated to add a custom finish to any motorcycle. Outside measurement is 4.5" x 7". SOLD EACH

11-7 Chrome Eagle license plate frame.



CHROME
PLATED

D

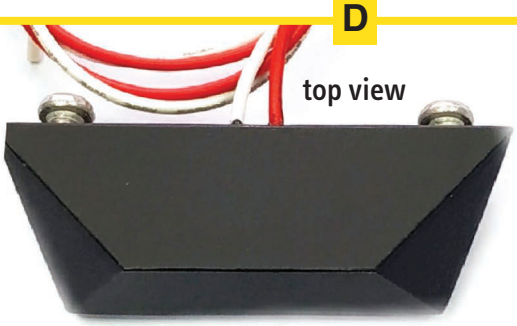

bottom view



NEW!

D. *STINGER LED BLACK LICENSE PLATE LIGHT*

Stinger license plate lights are fitted with 2 x white LED and clear color directional polycarbonate lens with a matt black alum housing.
Dimensions 90mm (L) x 15mm (W) x 20mm (D)
Mounting hardware and wiring included.
Sold each / SAE approved.

8-229 Stinger LED license plate light, black.

SEE STINGER BLACK LED TURN SIGNALS on page 1/32

A. *LICENSE PLATE FRAMES*

License plate frames measure 7-1/4" x 4-1/4". SOLD EACH

11-37 Chrome license plate frame.
11-38 Gloss black license plate frame.

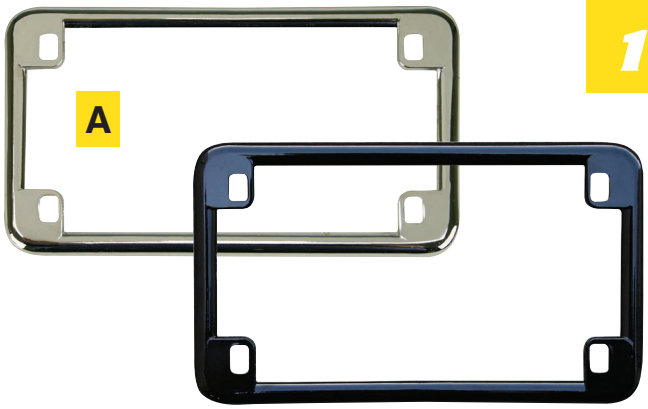

B. *LICENSE PLATE FRAME*

Chrome zinc die-cast, hole measure 5-3/4" x 2-3/4" center to center.

11-118 Viper style license plate frame. SOLD EACH
11-119 Skull and frame style license plate frame.

C. *SKULL KROMETS*

A decorative fastener that can be used anywhere on the bike but is best suited for license plate mounting. The finish and detail of the skull is top quality. Comes with removable stud, nut, lock and flat washer. 1" High, 5/8" wide. 1/4-20.

CHROME SKULLS
41-960 Painted Black eyes. SOLD EACH



D. *"ELECTRIC" KROMETS & CHROME KROMETS*

"Electric" Kromets are great for license hold down bolts — gives extra light to rear of bike. They can be used any place you may normally use the standard kromets. Easy mounting with hollow mount stud for wiring. 12V.

41-971 "Electric" kromet. Red. SOLD EACH
41-972 "Electric" kromet. Amber.
41-973 "Electric" kromet. Blue.

Traditional chrome plated decorative fasteners which can be used anywhere on the bike.

41-284 Must buy package of twenty. SOLD AS PKG.

B



C



E. *LICENSE PLATE KROMETS*

Add a finishing touch with these fasteners.

41-902 Black Maltese Cross. SOLD AS PAIR
41-903 Black Dice.

D



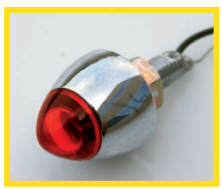

CHROME PLATED ELECTRIC

F. *LICENSE PLATE BUSHING AND SPACER*

Reduces an axle mounted license plate bracket hole from 1" to 3/4".

40-710 Bushing and spacer kit SOLD EACH

E





F



1



B

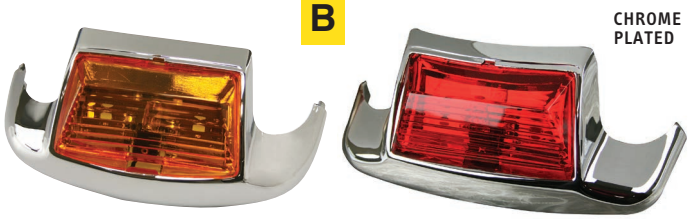

C

CHROME
PLATED



D

CHROME
PLATED



E



A. *FRONT FENDER LIGHT*

Die cast construction. Amber lens.

8-75 Fender light, 12V, 5/16" dual stud mount. SOLD EACH
OEM 59140-85T. **NOTE:** Taillight not recommended for street use.

B. *BIG TWIN FENDER LIGHTS*

Reproductions of the popular fender trim lights used on Big Twins. These lights will work on all models with the large dresser style fenders. Don't forget part No. **89-360** fender spear set found on page 2-35.

8-125 Front trim light with amber lens. SOLD EACH
OEM 59082-79.
8-126 Rear trim light with red lens. OEM 59658-79.

C. *1950'S STYLE FENDER LIGHTS*

These chrome plated, die cast, quality replica fender lights include rubber gasket, wire, and 12V bulb.

8-97 Fender light with clear lens. SOLD EACH
8-98 Fender light with amber lens.

D. *WEDGE MARKER LIGHTS*

Wedge style 12V marker light is chrome plated, 2" high x 3-1/2" long x 1-1/4 " wide.

8-114 Wedge light, red lens, standard bulb. SOLD AS PAIR
8-115 Wedge light, amber lens, standard bulb.

E. *HI-GLIDE INDICATOR/MARKER LIGHTS*

These Hi-glide EU approved lights are made from billet aluminum & are beautifully chrome plated w/extra heavy duty LED's. Easy to install & come supplied with all mounting hardware. SOLD EACH

8-351 Hi-Glide red LED light. O.D. 2.20" x 3.50"

F. *MINI MARKER LIGHTS*

Bantam style 12V mini marker light is ABS chrome plated, 1-5/8" wide x 1-1/4" high. Thru bolt wiring. SOLD EACH

8-118 Bantam light, red lens.
8-119 Bantam light, amber lens.

F

CHROME
PLATED



BANTAM

A. *KING & QUEEN MARKER LIGHTS*

Custom marker lights of chrome plated cast alloy. The hooded lens opening & wedge shape make these marker lights stand out. Both King and Queen are 12V. The King is available in single or double filament models, the Queen in single filament only. The point-of-sale display packaging lets the consumer view the light from all angles.

KING MARKER

8-93	Red light, dual filament.	SOLD EACH
8-94	Amber light, dual filament.	
6-57	Replacement bulb; 12V, single filament. Will also work with our bullet lights (at left).	
6-58	Replacement bulb; 12V, dual filament. Will also work with our bullet lights (at left).	

QUEEN MARKER

8-82	Red light, single filament.	SOLD EACH
8-83	Amber light, single filament.	

A



B

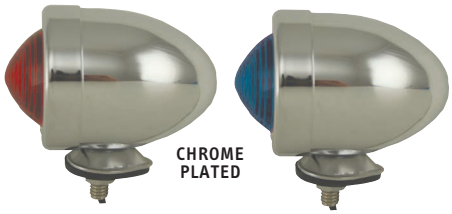

B. *CUSTOM BULLET MARKER LIGHTS*

A beautiful copy of H-D® old style marker lights with either red, blue or amber lens, 12V bulb & hidden wire mounting base. Can be mounted anywhere.

The below part numbers are with single element. Use replacement bulb part No. **6-57**.

8-55	Bullet light with red lens.	SOLD EACH
8-102	Bullet light with amber lens.	
8-103	Bullet light with blue lens.	

The below part numbers are with dual element. Use replacement bulb part No. **6-58**.

8-104	Bullet light with red lens.	SOLD EACH
8-105	Bullet light with amber lens.	
8-106	Bullet light with blue lens.	

Replacement lenses for all above bullet lights.

86-55	Amber lens only.	SOLD EACH
86-53	Red lens only.	

C



C. *BULLET STYLE DIRECTIONAL SIGNALS*

Kit includes four lights with mounting hardware. SOLD AS KIT

8-286	Fits 2000 thru 2002 Softail®, 1990 thru 2002 Sportster® and 1991 thru 2002 Dyna®. Replaces OEM 68005-99.
8-287	Fits 1988 thru 1999 Softail®. Replaces OEM 68007-99.

D



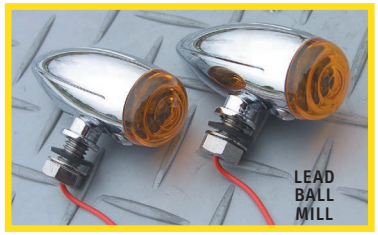

D. *CHROME BULLET LIGHTS*

Bullet lights add a custom look to choppers or dressers. Single element, 3" length, 1-1/2" from stand off to top, 5/16" mount stud with rubber grommet.

BULB SMOOTH	BULB BALL MILL	LED SMOOTH	LED BALL MILL	LENS COLOR
8-122	**8-303**	**8-309**	**8-305**	Amber
8-123	**8-304**	**8-311**	**8-307**	Red
—	—	**8-310**	—	Clear
—	—	**8-312**	—	Blue

SOLD AS PAIR

REPLACEMENT LENS	REPLACEMENT BULB	COLOR
86-160	—	Amber
86-163	—	Red
86-161	**6-116**	Clear
86-162	—	Blue

SOLD EACH

1



A

CHROME PLATED

A. *REPLACEMENT PARTS FOR BEACON-2 HALOGEN LIGHTS*

2-1/4" Diameter x 2-1/2" long, chrome plated, die cast halogen light with multi-faceted reflector. All lenses use a rubber gasket to seal the unit.

REPLACEMENT PARTS

86-116 Lens gasket. SOLD EACH



B

CHROME PLATED

B. *MARKER LIGHT MOUNTING KIT*

Kit includes four chrome plated mounting blocks and hardware for mounting bullet lights and similar sized marker lights. This kit allows for vertical mounting of these types of lights at the top tree on 35mm front forks, 1987 & earlier. Can be used at the rear on fender struts as well as many other custom light mounting situations.

11-104 Marker light mounting kit. SOLD AS KIT

C



86-120 86-121 86-122

C. *CLEAR LENSES FOR DIRECTIONALSIGNALS*

Clear lenses for front only or use with LED lights. **NOTE:** Some states do not allow clear lenses — check with your local authorities.

86-120 Clear lens. Replaces OEM 68457-86. SOLD EACH
86-121 Clear lens, flat, small. Replaces OEM 68571-63A.
86-122 Clear lens, flat, large. Replaces OEM 68440-86.

D. *DUAL FUNCTION LED TURN SIGNALS*

These LED lights feature dual function bright LED's, a clear lens (ECE approved) and a show chrome quality finish. SOLD AS PAIR

FITS 86'-95' TOURING
8-356 LED turnsignal, amber.
8-357 LED turnsignal, red.

FITS 86'-UP FLT/FXRT
8-359 LED turnsignal, red.

FITS 84'-99' SOFTAIL®
8-360 LED turnsignal, amber.
8-361 LED turnsignal, red.

FITS XL, FLSTC, FLSTS, FLSTF, FXSTS, FXD, FXDL, FXDWG
8-367 LED turnsignal, red.

W/CLAMP FOR 39MM FORK TUBES
8-363 LED turnsignal, red.

W/CLAMP FOR 41MM FORK TUBES
8-365 LED turnsignal, red.

D

8-356 8-360





A. *LED TURN SIGNAL KITS*

These mini LED lights feature high quality wiring, bright LED's, and all have dual wired function for custom use.

TURNSIGNAL		SOLD EACH
8-342	Amber LED turnsignal.	
8-343	Red LED turnsignal.	

TURNSIGNAL W/CLAMP KIT		SOLD AS PAIR
8-347	Red LED turnsignal, w/41mm clamp kit.	
8-349	Red LED turnsignal, w/39mm clamp kit.	

A

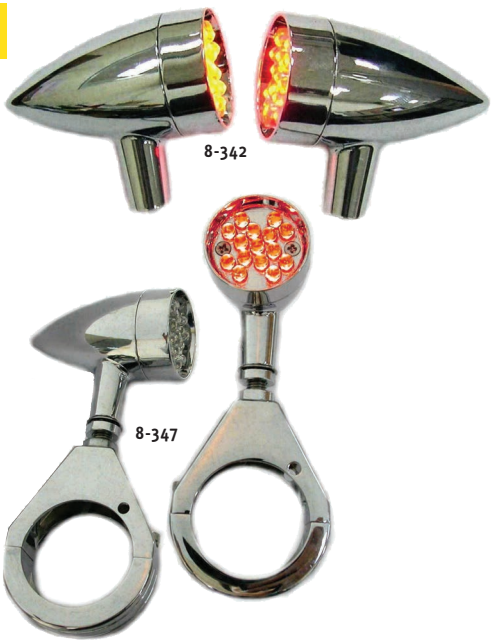

B. *DUECE™ STYLE DIRECTIONAL SIGNAL LIGHTS*

8-190	Duece™ style turn signal kit. This 12V, **U.S.A. MADE,** Duece™ style turn signal with dual filament kit includes: qty. 2 of part No. **8-188** front signal with amber lens (OEM 68885-00), and qty. 2 of part No. **8-189** rear turn signal with amber lens (wiring thru mount hole).	SOLD AS KIT
8-188	Complete front dual filament amber turn signal. OEM 68972-00.	SOLD EACH
8-189	Complete rear dual filament amber turn signal with the wiring run thru the mounting hole.	SOLD EACH
8-270	Complete rear dual filament amber turn signal. OEM 68977-00.	SOLD EACH
86-123	Amber lens only. OEM 68973-00.	SOLD EACH
86-124	Red lens only.	SOLD EACH
86-125	Clear lens only (for use with LED bulb).	SOLD EACH

B



C. *TURN SIGNAL SMOKE LENS KIT*

Quantity of 4 flat style smoked turn signal lens and 4 amber colored bulbs. Fits 1986-current models equipped with flat turn signals lens. Replaces OEM 69308-02.

89-123	Turn signal smoke lens kit.	SOLD AS KIT

C

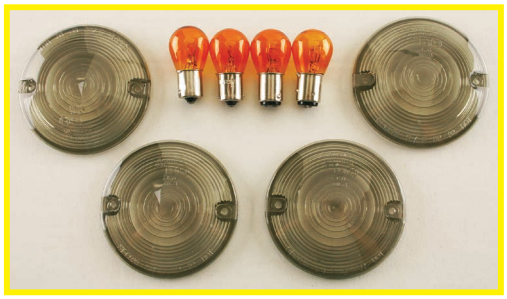

D. *REAR TURN SIGNAL MOUNTS for FL*

Rear turn signal mount for all 4 speed FL 1974 thru 1984 and FLST 1986 thru 1988.

11-72	Stock size. OEM 68510-74A.	SOLD EACH
11-106	4" Shorter than stock.	

D



CHROME PLATED

E. *LOAD EQUALIZER FOR USE WITH LED'S*

17-132	Used to prevent irregular lighting when small LED turn signals are installed.	SOLD EACH

E



1

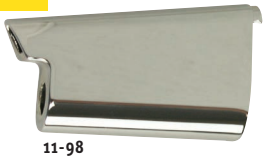
11-98

A

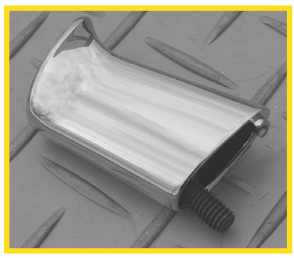
11-1


11-2

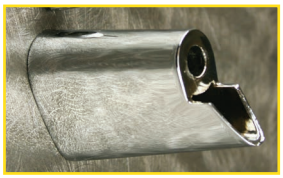
11-79


11-80

ChrisProducts

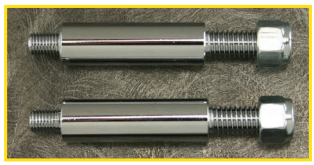
11-81


CHROME SPACERS

11-83

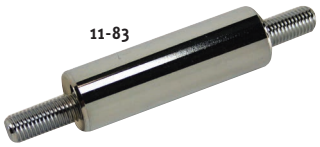

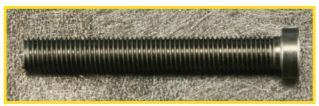
11-86


11-3

A. *TURN SIGNAL MOUNTING HARDWARE for H-D®*

These **U.S.A. MADE** brackets & hardware are available individually and will work with all M.W. H-D® style turn signals.

11-79	Rear turn signal support with screw. OEM 68480-73.	SOLD EACH
11-98	Rear turn signal support. OEM 68480-93. Fits Dyna Glide®, FXDL & FXDWG, 1993 and later and Sportster® 1993 & later.	SOLD EACH
11-1	Rear turn signal support. OEM 68480-02. Fits Softail® FXSTI, FXSTFI, FLSTSI, FXSTST, and FXSTBI.	SOLD EACH
11-2	Rear turn signal support. OEM 68821-00. Fits Softail® FXSTD & FXSDI, 2000 & later.	SOLD EACH
11-80	Handlebar clamp with screw. OEM 68487-82 & 68486-82A.	SOLD EACH
11-81	Rear turn signal stud (1-7/8" long), with nut. OEM 68493-87.	SOLD AS PAIR
11-82	Rear short stud only (1-1/4" long). Moves signal in close for sleeker look.	SOLD AS PAIR
11-85	Rear short stud only (5/8" long).	SOLD AS PAIR
11-83	Stud with spacer. OEM 68528-77A.	SOLD EACH
11-86	Low head socket screw. OEM 4070.	SOLD EACH
11-87	1/4" Chrome spacer.	SOLD EACH
11-88	1/2" Chrome spacer.	SOLD EACH
11-89	3/4" Chrome spacer.	SOLD EACH
11-92	Chrome spacer assortment. Includes one each of above individual spacers.	SOLD AS PKG.
11-3	Directional signal mount kit for front signals for most H-D®. OEM 68185-00.	SOLD AS KIT

B. *TURN SIGNAL MOUNTING KIT for FL*

B


11-103


CHROME PLATED

Chrome plated mounting hardware for FL turn signals, 1968 thru 1995. Can also be used on custom applications.

11-101	Kit; includes all items. Fits 1968 thru 1982. OEM 68518-68.	SOLD AS KIT
11-103	Bracket. Fits 1968 thru 1995. OEM 68519-68.	SOLD EACH

DIRECTIONAL SIGNAL LIGHTS — ORIGINAL H-D® STYLE

A. THESE 12V, DOUBLE CONTACT (EXCEPT PART NO. 8-84) H-D® REPLICA TURN SIGNALS CAN BE USED ON ANY MOTORCYCLE.

8-85 Complete early amber turn signal. OEM 68557-70A. SOLD EACH
8-84 Complete single element early amber turn signal.
8-86 Complete early red turn signal.
86-87 Early amber lens only. OEM 68571-63A.*
86-88 Early red lens only. OEM 68570-63.*
86-93 Early red lens with blue dot installed, only.*
86-121 Early clear lens, for front only.*

8-88 Complete late amber turn signal. OEM 68400-86. SOLD EACH
8-87 Complete late red turn signal.*
86-89 Late amber lens only. OEM 68440-86.*
86-90 Late red lens only.*
86-94 Late red lens with blue dot installed, only.*
86-122 Late clear lens for front only.*

*Chris Products



B. FLAT STYLE LENS SINGLE FILAMENT TURN SIGNAL AND RUNNING LIGHTS.

SOLD EACH

86-87 Amber lens only. OEM 68571-63A.
86-88 Red lens only. OEM 68570-63.
86-93 Red lens with blue dot installed, only.
86-121 Clear lens, for front only.

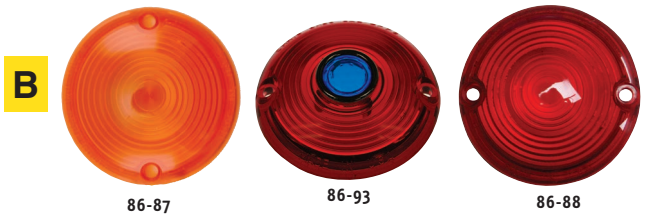

C. DUAL FILAMENT AMBER TURN SIGNAL UNIT. FITS MOST H-D® MODELS, 1986 & LATER.

8-99 Complete amber turn signal without threads. OEM 68404-86.
8-150 Complete red turn signal without threads.
8-200 Complete red turn signal with threads.
86-83 Amber lens only. OEM 68457-86.
86-84 Red lens only.
86-92 Red lens with blue dot installed, only.
86-120 Clear lens, for front only. SOLD EACH



D. AMBER TURN SIGNAL UNIT WITH SINGLE FILAMENT FOR FX, FXR, & XL, 1973 THRU 1985.

8-71 Complete amber turn signal with threads. OEM 68514-73. SOLD EACH
8-101 Complete amber turn signal without threads. OEM 68515-77A.
86-50 Amber lens only. OEM 68483-73.
86-85 Red lens only.
86-91 Red lens with blue dot installed, only.



1

STINGER LED TURN SIGNALS



NEW!

The new Stinger turn signals are fitted with a scanning LED function, smoke color polycarbonate lens, 6 x amber LED with a matt black alum housing.
Dimensions 58mm (L) x 17.4mm (W) x 30.3mm (D) / Mounting hardware and wiring included. Sold AS pair. ECE approved.

8-228 Stinger scanning LED turn signal, black.

SEE STINGER LED BLACK LICENSE PLATE LIGHT on page 1/24

DIRECTIONAL SIGNAL LIGHT KITS — ORIGINAL H-D® STYLE



8-71



11-80



11-79

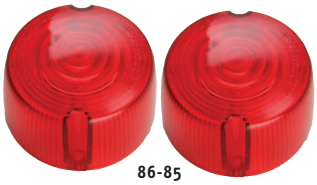

86-85

86-120



86-84



ChrisProducts

12V, **U.S.A. MADE**, flat lens turn signal kit.

Replacement parts and mounting hardware for turn signal kit:

OEM NO.	MIDWEST PART NO.	DESCRIPTION
68487-82 & 68486-82A	**11-80**	Handlebar clamps.
68480-73	**11-79**	Rear signal support.
68570-63	**86-88**	Extra red lenses.
68571-63A	**86-121**	Clear lens, flat, small.

This 12V, **U.S.A. MADE**, early style turn signal kit includes:

QTY.	OEM NO.	MIDWEST PART NO.	DESCRIPTION
4	68514-73	**8-71**	Signal w/amber lens.
2	68487-82 & 68486-82A	**11-80**	Handlebar clamps.
2	68480-73	**11-79**	Rear signal support.
2		**86-85**	Extra red lenses.

8-110 Early style (1973 thru 1986) turn signal kit. **SOLD AS KIT**

This 12V, **U.S.A. MADE**

Replacement parts and mounting hardware for late style turn signal kit:

OEM NO.	MIDWEST PART NO.	DESCRIPTION
68406-86		Signal w/amber lens.
68487-82 & 68486-82A	**11-80**	Handlebar clamps
68480-73	**11-79**	Rear signal support.
	86-84	Extra red lenses.
	86-92	Extra red lenses.
68457-86	**86-120**	Clear lens (available separately).

A. *ULTIMA® CHARGING SYSTEM*

Kit includes chrome solid state voltage regulator, stator, rotor (your choice of heavy duty or OEM style), and mounting hardware. Fits 1970 thru 1999 Big Twins. SOLD AS KIT

53-605 Ultima® Kit with heavy duty rotor; 32 amp.
53-606 Kit with OEM style rotor; amp.
53-55 Kit with 38 amp components. 99' - 06' Twin Cam®.

A

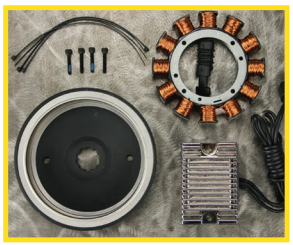

53-605

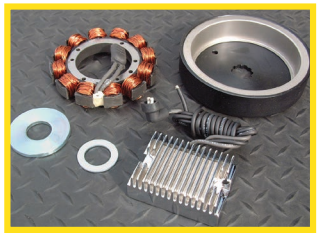

53-606



53-55

B. *ULTIMA® CHARGING SYSTEM ACCESSORIES*

53-630 Rotor spacer, small. OEM 29961-85. SOLD EACH
53-631 Rotor spacer, large. OEM 29960-85. SOLD EACH
53-617 Stator bolts. SOLD PKG OF 4

B



53-630

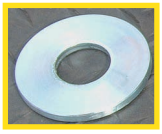

53-631



53-617

C. *CHARGING SYSTEM*

53-676 32 Amp rotor / stator kit, includes rotor kit OEM 29957-81B & stator OEM 29970-88. SOLD AS KIT
53-679 38 Amp 3 phase rotor / stator kit. Charges 15 amps at 800 RPM. Includes rotor kit OEM 29981-95 & stator OEM 30017-01. SOLD AS KIT

C

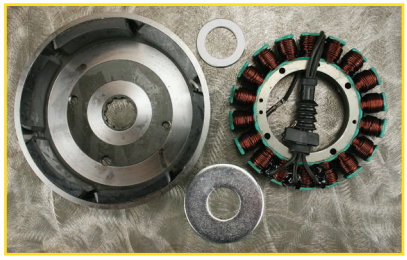

53-679

D. *ROTORS*

These rotors have enclosed magnets; no chance that they can come loose. Fits Big Twin 1981 & later. Replaces OEM 29957-81B & 29957-85A. Rotors will work on all H-D® Big Twin with correctly matched stator and volt pak. Refer to service manual for proper spacing due to different sprocket shaft lengths and compensator stack heights.

53-603 Heavy duty rotor; 22/32 amp. 15/32" Thick at splines. "No tear out." SOLD EACH
53-604 Late OEM style rotor; 22-32 amp. .195" Thick at splines. Supplied with two washer spacers: OEM 29961-85 (1.75" O.D. x .093" thick) and OEM 29960-85 (2.81" O.D x .219" thick).
53-52 Rotor; 38 amp. OEM 29981-95.
53-615 Rotor; 45 amp. OEM 29999-97.
53-678 32 amp rotor kit. Replaces OEM 29957-81B. Fits 1976 thru 1999 models. SOLD AS KIT

D



53-604

E. *STATORS*

BIG TWIN

53-186 Fits 1970 thru 1975 H-D® 74" 4 Wire, 15 amp. OEM 29965-70. SOLD EACH
53-128 Fits 1976 thru 1980 H-D® 74" & 80". 2 Wire, 17.8 amp. OEM 29965-75.
53-251 Fits 1981 thru 1988 H-D® 80" 2 Wire, 22 amp. OEM 29965-81.
53-54 38 Amp. Replaces OEM 30017-01.
53-319 Fits EVO Big Twins 89'-99', 32 amp, OEM 29970-88.
53-720 Fits 99'-00' Softails® & 00'-03' Dyna®, 32 amp. OEM 29951-99.
53-721 Fits 97'-98' EVO FLT, 45 amp. OEM 29987-97.
53-722 Fits 99'-01' FLT, 45 amp. OEM 29987-99.
53-723 Fits 02'-04' FLT, 45 amp. OEM 29987-02.

SPORTSTER® SOLD EACH

53-300 Fits Sportster® 883cc, 1100cc and 1200cc, 1986 thru 1990. 19 Amp. OEM 29967-84A.
53-320 Fits Sportster® 883cc & 1200cc, 1991 & later. 22 Amp. OEM 29967-89.

E



53-186

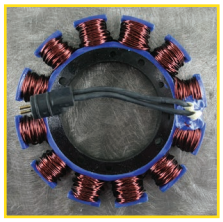

53-128



53-721

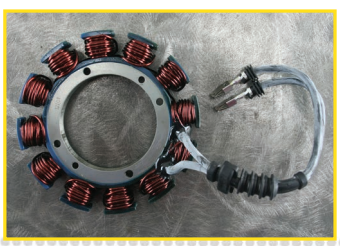

53-720

1

A



PLASTIC

A. *ALTERNATOR PLUG RETAINER*

53-296 Fits all Big Twins 1971 & later. SOLD EACH
OEM 29954-71.

C. *CHROME ALULMINUM ALTERNATOR PLUG RETAINER*

Attached direct to the engine case to ensure that your plug stays in place and helps prevent any unwanted electrical shorts.

53-129 Chrome alternator plug retainer, fits Big Twins 70'-88'.
53-130 Chrome alternator plug retainer, fits Big Twins 89'-present. SOLD EACH

B



D

CHROME PLATED



D. *ULTIMA® HEAVY DUTY REGULATOR MOUNT*

Thick 3/16" steel comes in both chrome plated or raw finish. Bolts to the bottom of the front motor mount on Big Twins. 1/4-20 studs for easy mounting of voltage regulator. **MADE IN USA**

5-232 Heavy duty regulator mount. Raw. SOLD EACH
5-233 Heavy duty regulator mount. Chrome. SOLD EACH

E. *CHROME PLATED FINNED VOLTPAK COVER*

89-381 Cover fits most voltpaks. SOLD EACH

E

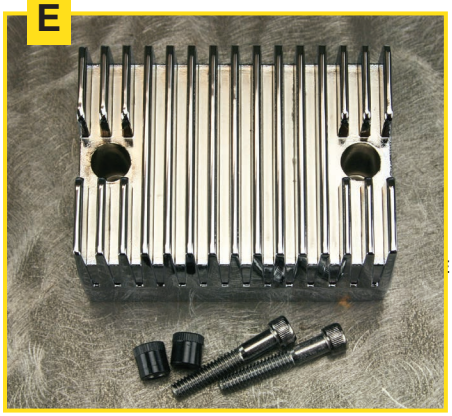

F. *REGULATOR COVERS*

89-525 Cover kit for 1989 thru 1999 Softail®. OEM 74578-97.
89-526 Cover kit for 1991 & later Dyna®. OEM 74577-97.
89-527 Cover kit for 1985 & later XL (shown). OEM 74579-97.
89-537 Cover kit for 2001-2006 Softail®. OEM 74597-01.
SOLD AS KIT

F

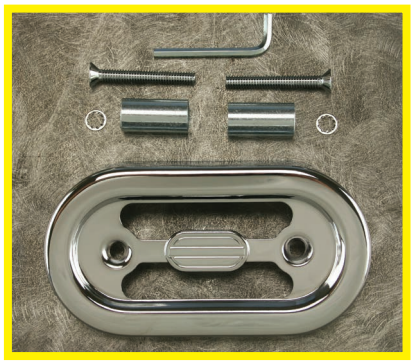

89-526

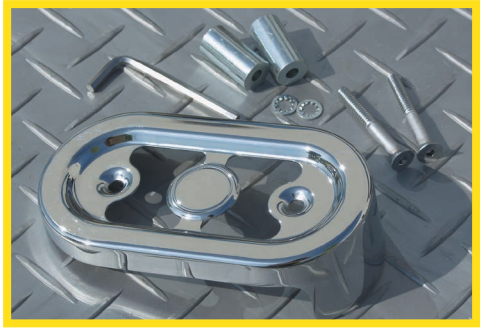

89-527



89-537

SOLID STATE ELECTRONIC VOLTAGE REGULATORS

U.S.A. MADE SOLID STATE ELECTRONIC VOLTAGE REGULATORS

These quality manufactured solid state voltage regulators cover the popular H-D® applications. Highly reliable; the ceramic & circuit board technology gives a combination of improved electrical regulation with lower temperatures. Available chrome plated or black with polished fins. 30 Day warranty.

ACCEL

H-D® owners & mechanics will welcome Accel's solid state voltage regulators that cover every H-D® application. Each regulator is designed to perform with high reliability and features Accel's exclusive chrome finish for that custom look. All units are set to factory OEM specifications. Accel's unique circuitry ensures that the battery cannot be drained by the charging system while the bike is not in use. Each unit comes complete with installation instructions. Limited life time warranty.



CHROME PLATED



BLACK

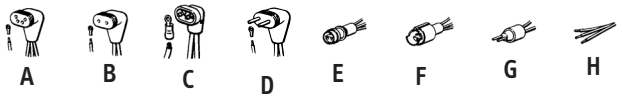

A B C D E F G H

CONNECTOR TYPES

APPLICATION	YEAR	OEM NO.	CHARGING SYSTEM	CONNECTOR TYPE	CHROME PLATED U.S.A. MADE REGULATORS	BLACK U.S.A. MADE REGULATORS	ACCEL ELECTRONIC VOLTAGE REGULATORS — CHROME
FL & FLH. XL, XLH & XLCH.	1965/1969 1965/1977	74511-65 74510-64	Replaces 12V mechanical regulator or 12V generator.	H	**53-552**	**53-306**	-------
FL & FLH. FX & FXE.	1970/1975 1971/1975	74510-70A	15 Amp alternator.	A	**53-547**	**53-302**	-------
FL, FLH, FLH-80, FLT & Classic FX, FXE, FXS, FXS-80 & FXEF-80.	1976/1980 1976/1980	74512-79A	17.8 Amp alternator	B	**53-548**	**53-303**	**53-219**
XLCH. XLH, XLCH & XLS.	1977 1978/1981	74504-78	12V Generator	E	**53-549**	**53-304**	-------
FLH 80 & Classic. FX, FXE, FXEF, FXS & FXB. FXWG. FLT & FLHT Classic FXR, FXRS, FXRT & FXRP. Softail® models.	1981/1984 1981/1985 1981/1986 1981/1988 1982/1988 1986/1988	74516-86	22 Amp alternator.	D	**53-550**	**53-309**	**53-264**
XL, XLS & XLX.	1982/1984	74504-82	12V Generator.	F	**53-551**	**53-308**	--------
XL.	Late 1986/ 1990	74523-84A	19 Amp alternator.	G	**53-553**	**53-310**	--------
All Big Twin models.	1989 & Later	74519-88	32 Amp alternator.	C	**53-544**	**53-543**	**53-322**
XL.	1991/1993	74523-91	22 Amp alternator.	G	**53-542**	**53-541**	--------
XL 883 / 1200.	1994 & Later	74523-94A			**53-546**	**53-545**	
FLST, FXST	2000	74512-00	—		**53-571**	**53-570**	
FXST	2001 & Later	74610-01, 74540-01	38 Amp alternator.		**53-53**	**53-56**	
FLT, FLH	2002 & 2003	74505-02	—		**53-561**	**53-559**	
FLT, FLH	2004 & 2005	74505-04	—		**53-563**	**53-562**	
DYNA, FXD	2004 & 2005	74631-04	—		**53-575**	**53-574**	
XL	2004/2006	74523-04	—		**53-573**	**53-572**	
DYNA, FXD	2006 & 2007	74631-06	—		**53-578**	**53-576**	
FLT, FLH	2006/2008	74505-06	—		**53-565**	**53-564**	
FLST, FXST	2007	74540-07	—		**53-584**	**53-582**	
XL	2007/2008	74546-07	—		**53-588**	**53-587**	
DYNA, FXD	2008/2013	74631-08	—		**53-581**	**53-580**	
FLST, FXST	2008/2013	74540-08	—		**53-586**	**53-585**	
XL	2009/2011	74711-08	—		**53-569**	**53-568**	

SOLD EACH

1

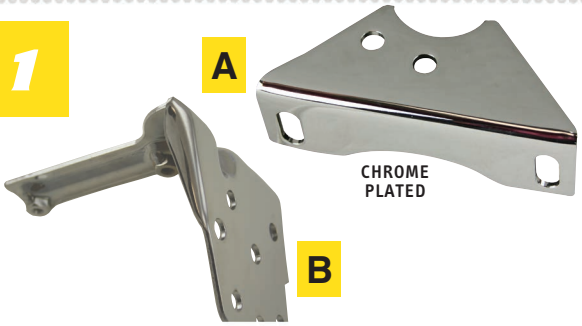

A. *REGULATOR (BOSCH) MOUNTING BRACKET*

Used for Bosch regulator (part No. **53-23**) or Bosch type regulator. Put the regulator where it belongs, on top of the generator. Mount to generator frame screw. Allows you to use stock end cover.

5-69 For Sportster® and H-D® 74". SOLD EACH

B. *RECTIFIER MOUNTING BRACKET for BIG TWIN*

This rectifier mounting bracket fits OEM and accessory rectifiers.

5-85 For FL & FX, 1976 & later. OEM 74533-75B. SOLD EACH



C. *RECTIFIER / REGULATOR BRACKET*

Exact reproduction for all H-D® rubber mounted motors.

5-126 Fits Shovel® 1980 thru 1985 and FLT & FXR 1984 & later. OEM 74529-79. SOLD EACH

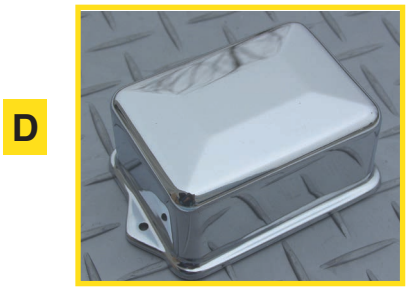

D. *LARGE REGULATOR COVER*

Oblong, use with large Delco Remy regulators and 2 brush generators.

89-4 Large Delco Remy regulator cover. SOLD EACH

E. *SMALL PARTS & GASKET KITS FOR GENERATORS*

Hard-to-find parts needed to rebuild generators for Harley-Davidsons®.

77-113 Fits No. 32E & 52 generators, 1936 thru 1957 Big Twins. American made. SOLD AS KIT

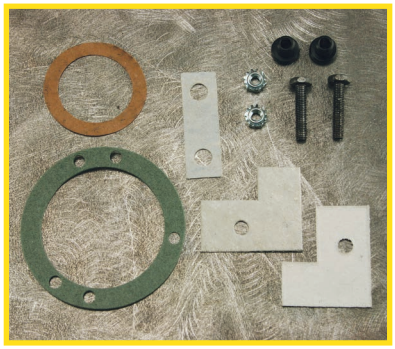

77-113

F. *GENERATOR END COVER*

Heavy gauge steel stamping, finest quality. Easy to install. SOLD EACH

89-32 For Sportster® & 74 C.I. 1958 & later. OEM 31081-83T.



G. *TWO BRUSH GENERATOR COVER*

89-10 For 74" & Sportster®, 1958 & later (generator equipped models). Easy to install. OEM 31080-83T. SOLD EACH

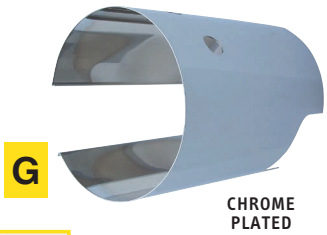

H. *GENERATOR SCREW KITS*

Generator mounting screws to mount H-D® or Midwest generators. Authentic reproductions. Perfect for restorers or rebuilders.

53-195 For Big Twin 1936 thru 1957. SOLD AS SET

53-194 For Big Twin 1958 thru 1969.

SEE SECTION 14 FOR ALLEN TYPE SCREWS



HIGH QUALITY CHROME PLATED

COLONY

GENERATOR PARTS

ALL PARTS SOLD EACH EXCEPT AS NOTED

1	**95-174**	NEEDLE BEARING 74" 1961/1969 SPORTSTER® 1961/1981 (OEM 9064)
2	**96-241**	LOCKWASHER 1/4" (OEM 7036)
3	**53-324**	CHROME END COVER COMMUTATOR 65A MODEL GENERATOR OEM 30132-61A)
4	**95-103**	OIL SEAL BRUSH END NEEDLE BEARING TYPE 74" 1961/1969, SPORTSTER® 1961/1976 SERVI-CAR 1961/1966 (OEM 12002)
5	**53-185**	BRUSH HOLDER 12 VOLT H-D® 65A GENERATOR (OEM 30350-65)
6	**53-256**	POLE SHOE SCREW (USE 2) 58 & 65A (OEM 30280-58)
7	**53-144**	BRUSHES 74" 1958 & LATER, XL, XLCH, SERVI-CAR (OEM 30426-58) SOLD EACH
8	**53-253**	GENERATOR DRIVE END COVER 58 & 65A. ALUMINUM (OEM 30095-61)
9	**95-102**	OIL SEAL GEAR END 61" & 74" OHV 1946 & LATER FLATHEADS, & 45" (OEM 30145-46A)
10	**95-101**	BEARING GEAR END (OEM 9007) U.S.A. MADE
11	**53-311**	SNAP RING (OEM 11004) U.S.A. MADE
12	**53-252**	GEN. FRAME SCREW SPORTSTER® 1958/1980 74" 1958/1969 (OEM 30012-58)
13	**53-193**	DEFLECTOR 1958 & LATER (OEM 31035-58)
14	**53-161**	GEAR 14 TOOTH (OEM 31073-63A)
15	**53-298**	OIL SEPARATOR WASHER (OEM 31067-63)
16	**53-144**	BRUSHES 74" 1958 & LATER, XL, XLCH, SERVI-CAR (OEM 30426-58) SOLD EACH

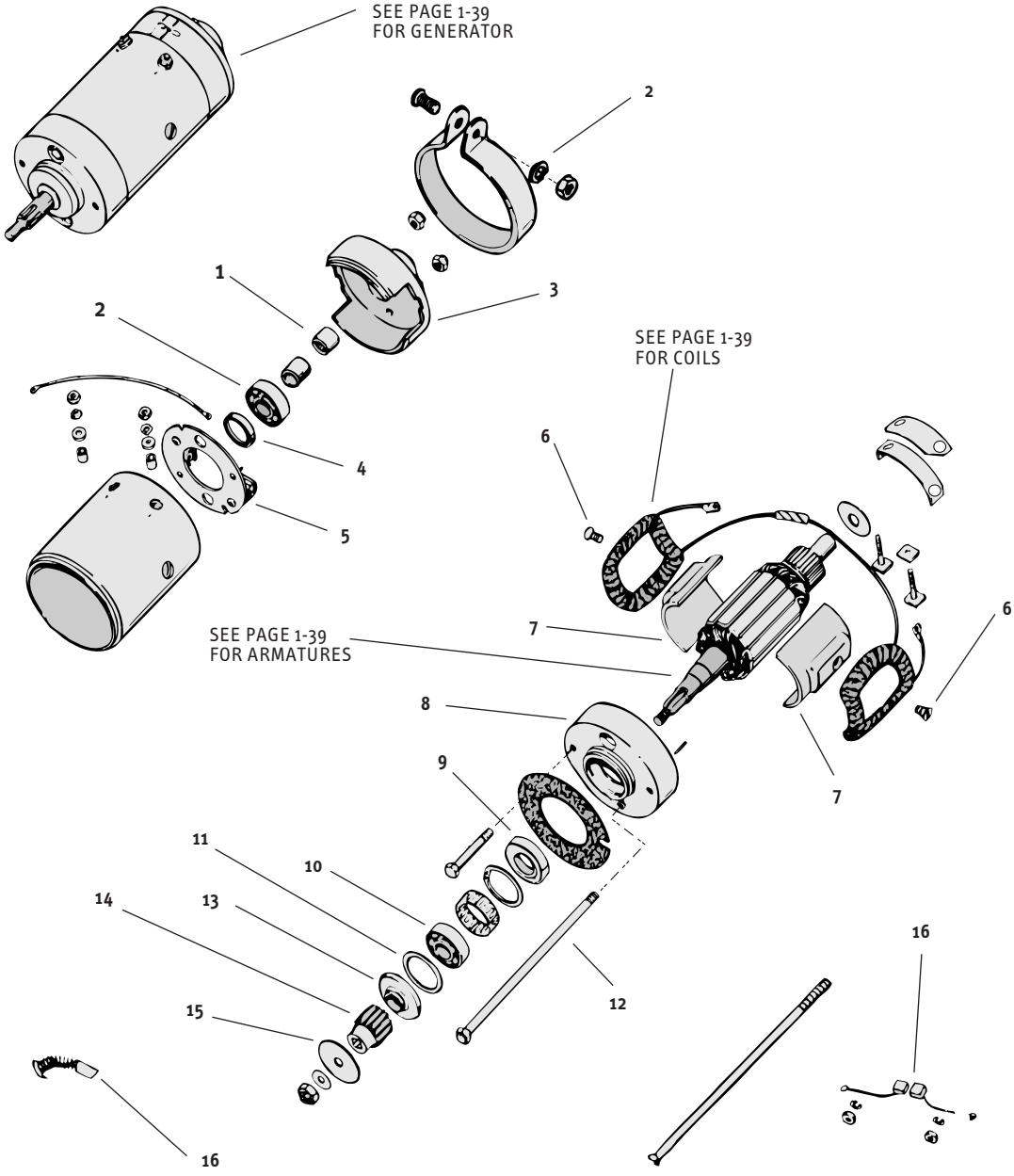

1 ULTIMA® THUNDER FIRE™ HEAVY DUTY STARTERS

89'-06' BIG TWINS

Ultima® is setting the standard in Starter performance and value with the new Heavy Duty series Thunder Fire starters for 1989 thru 2006 model Big Twins, except 2006 Dynas®. These Starters are built with all new tooling and all parts are new not Re-manufactured like some of our competitors. We have made improvements to the key components in these starters to insure long life and exceptional performance. We are sure you will agree these are a best value product.

1.4 KW Series

Top Post



1.75 KW Series



2.0 KW Series

Angled Post

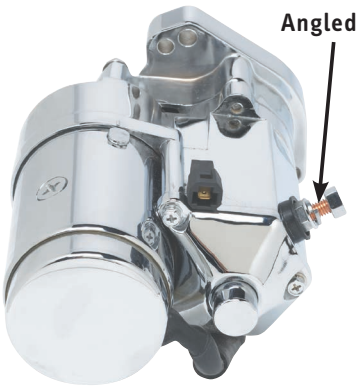

2.4 KW Series



ULTIMA Thunder Fire



Black Wrinkle finish

TOP POST STARTERS

70-220	1.4 Kw Chrome Plated
70-221	1.4 Kw Wrinkle Black
70-224	1.75 Kw Chrome Plated
70-226	2.0 Kw Chrome Plated
70-228	2.4 Kw Chrome Plated

ANGLED POST STARTERS

70-222	1.4Kw Chrome Plated
70-223	1.4Kw Wrinkle Black
70-225	1.75 Kw Chrome Plated
70-227	2.0 Kw Chrome Plated
70-229	2.4 Kw Chrome Plated

STARTER BOLTS

70-218	Starter Bolt; 1/4"-20 x 5-1/4"
70-219	Starter Bolt; 10-32" x 6"

1.4 KW SERIES

- Availible in Black or Chrome
- Fits all 89/05 model Big Twins with no clearance issues
- Works with OEM battery
- Each Starter is individually tested with data sheet included

1.75KW SERIES

- Great upgrade for stock and 1.4 Kw starters. Made for trouble free starting of most small strokers
- Fits some stock applications on Big Twins where 3/4" longer body is not a problem.
- Includes manual push button cap on solenoid
- Works with OEM battery
- Each Starter is individually tested with data sheet included

2.0 KW SERIES

- Made for Big Inch engines
- Heavier Clutch Gears
- Fits some stock applications on Big Twins where 7/8" longer body is not a problem.
- Fits FLT and Dyna® when used with **89-14** oil filler spacer
- Includes manual push button cap on solenoid
- Requires a 300 amp Battery and good cables for best results
- Each Starter is individually tested with data sheet included

2.4 KW SERIES

- Made to Start anything Big Inch
- Heavier Clutch Gears
- Includes manual push button cap on solenoid
- Requires a 300 Amp Battery and good cables for best results
- Each Starter is individually tested with data sheet included

ULTIMA® THUNDER FIRE™ HEAVY DUTY STARTERS

06' & LATER DYNAS®, 07' & LATER BIG TWINS



Ultima® has continued the standard in Starter performance and value with the new Heavy Duty series Thunder Fire starters for 2007 & later model Softail® & Touring models, and 2006 & later Dyna®. These Starters are built with all new parts & tooling. Not Re-manufactured like some of our competitors. Works with OEM battery & individually tested w/data sheet included. We are sure you will agree these are a best value product.

1.4 KW SERIES

70-235 1.4 Kw, Thunder Fire™ starter, wrinkle black.
70-236 1.4 Kw, Thunder Fire™ starter, chrome plated.
70-237 1.4 Kw, Thunder Fire™ starter, plain.

1.75 KW SERIES

70-238 1.75 Kw, Thunder Fire™ starter, wrinkle black.
70-239 1.75 Kw, Thunder Fire™ starter, chrome plated.
70-240 1.75 Kw, Thunder Fire™ starter, plain.

1

ULTIMA® 1.4 & 1.75 KW THUNDERFIRE STARTERS

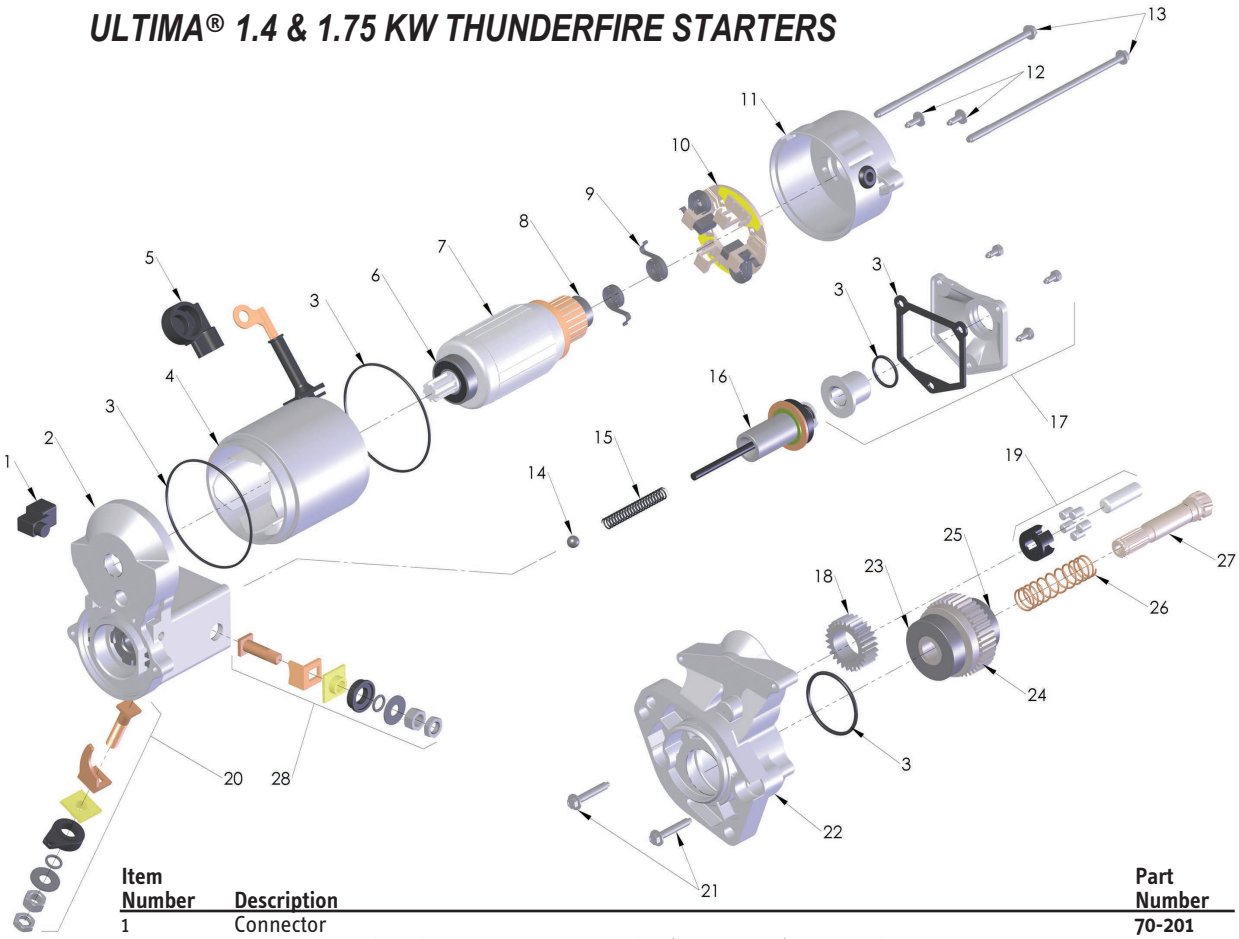

Item Number	Description	Part Number
1	Connector	70-201
2	Electro-magnetic Switch Assembly and Housing (Angled Post), Chrome, includes # 1,20,28	70-204
	Electro-magnetic Switch Assembly and Housing (Angled Post), Black, includes # 1,20,28	70-203
	Electro-magnetic Switch Assembly and Housing (Top Post), Chrome, includes # 1,20,28	70-266
	Electro-magnetic Switch Assembly and Housing (Top Post), Black, includes # 1,20,28	70-290
3	Starter Seal/Gasket Kit	70-212
4	Yoke Assembly, Includes Internals plus 2 Brushes and Connector (for 1.4KW Starter), Chrome	70-213
	Yoke Assembly, Includes Internals plus 2 Brushes and Connector (for 1.4KW Starter), Black	70-207
	Yoke Assembly, Includes Internals plus 2 Brushes and Connector (for 1.75KW Starter), Chrome	70-214
5	Insulating Boot	70-215
6	Bearing, Armature, 6002 Series	70-217
7	Armature Assembly (for 1.4KW Starter), includes # 6,8	70-205
	Armature Assembly (for 1.75KW Starter), includes # 6,8	70-206
8	Bearing, Armature, 608 Series	70-267
9	Spring, Brush - Includes 2 springs	70-268
10	Brush Plate Assembly, Includes 2 Brushes and 2 Springs	70-208
11	Starter End Cap, Chrome	70-269
	Starter End Cap, Black	70-263
12	Fastener Kit, Brush Plate (2 Screws), Chrome	70-270
	Fastener Kit, Brush Plate (2 Screws), Black	70-264
13	Fastener Kit, Starter Housing (2 Screws), 1.4 KW, Chrome	70-271
	Fastener Kit, Starter Housing (2 Screws), 1.4 KW, Black	70-265
	Fastener Kit, Starter Housing (2 Screws), 1.75 KW, Chrome	70-307
14	Steel Ball	70-272
15	Spring	70-273
16	Plunger Assembly	70-250
17	Solenoid Cover Assembly (for 1.4KW Starter), Chrome	70-251
	Solenoid Cover Assembly (for 1.4KW Starter), Black	70-261
	Solenoid Cover Assembly w/push button (for 1.75KW Starter)	70-274
18	Idler Gear	70-252
19	Bearing and Shaft Assembly, Idler Gear	70-253
20	Starter Post Assembly, Main Power (long post)	70-254
21	Fastener Kit, Starter Housing (2 Screws)	70-255
22	Face Plate, Starter Housing, Chrome	70-256
	Face Plate, Starter Housing, Black	70-262
23	Bearing, Clutch, 6004 Series	70-257
24	Clutch Assembly, Starter, includes # 23,25	70-211
25	Bearing, Clutch, 6904 Series	70-258
26	Spring	70-259
27	Output Shaft, Starter	70-260
28	Starter Post Assembly, Solenoid to Starter Motor (short post)	70-283

ULTIMA® 2.0 & 2.4 KW THUNDERFIRE STARTERS

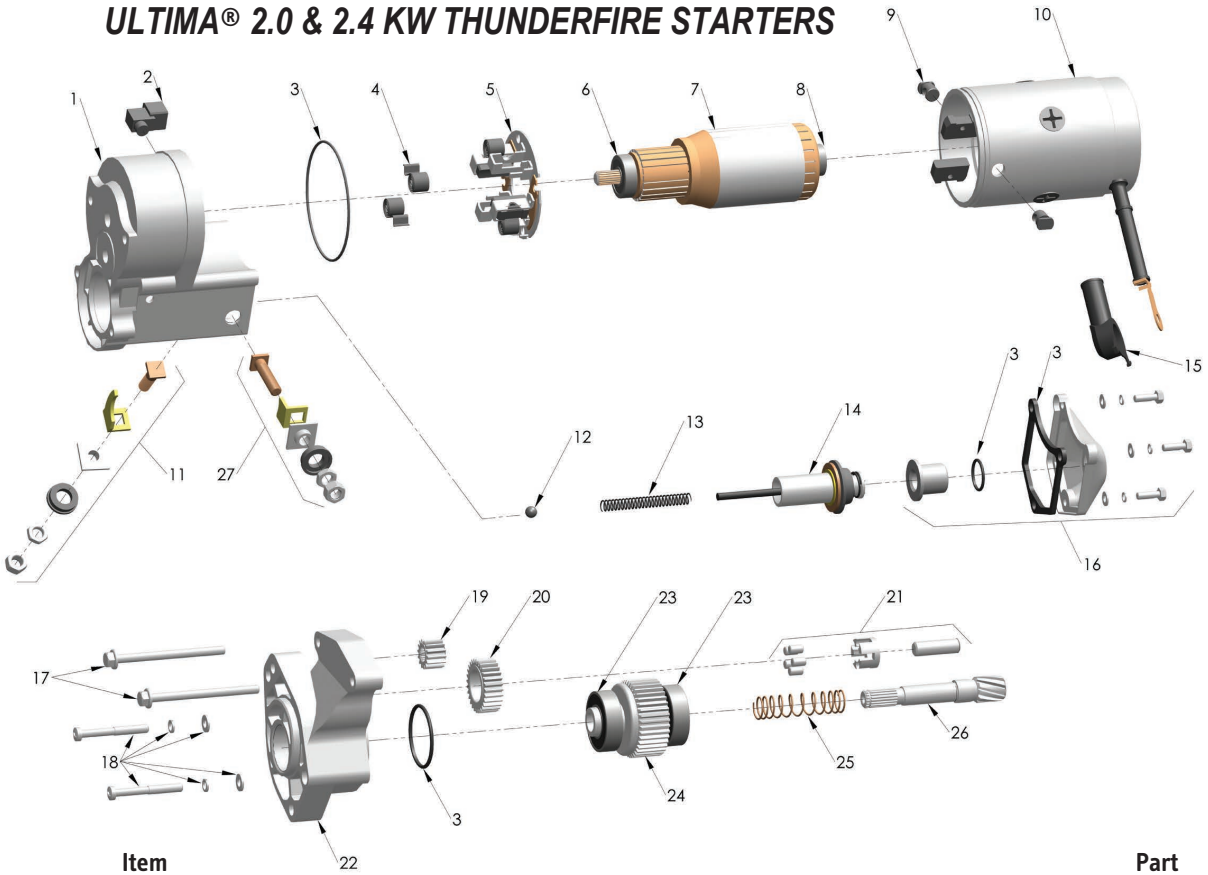

Item Number	Description	Part Number
1	Electro-magnetic Switch Assembly and Housing (Angled Post), 2.0 KW, includes # 2,11,27	70-275
	Electro-magnetic Switch Assembly and Housing (Top Post), 2.0 KW, includes # 2,11,27	70-285
	Electro-magnetic Switch Assembly and Housing (Angled Post), 2.4 KW, includes # 2,11,27	70-299
	Electro-magnetic Switch Assembly and Housing (Top Post), 2.4 KW, includes # 2,11,27	70-301
2	Connector	70-276
3	Starter Seal/Gasket Kit, 2.0 KW	70-277
	Starter Seal/Gasket Kit, 2.4 KW	70-302
4	Spring, Brush, 2.0 KW - Includes 2 springs	70-278
	Spring, Brush, 2.4 KW - Includes 2 springs	70-303
5	Brush Plate Assembly, 2.0 KW, Includes 2 Brushes and 2 Springs	70-279
	Brush Plate Assembly, 2.4 KW, Includes 2 Brushes and 2 Springs	70-304
6	Bearing, Armature, 6200 Series	70-280
7	Armature Assembly (for 2.0KW Starter), includes # 6,8	70-281
	Armature Assembly (for 2.4KW Starter), includes # 6,8	70-282
8	Bearing, Armature, 608 Series	70-267
9	Yoke Nut-Pin (2 Nut-Pins)	70-284
10	Yoke Assembly, Includes Internals plus 2 Brushes and # 9 (for 2.0KW Starter)	70-286
	Yoke Assembly, Includes Internals plus 2 Brushes and # 9 (for 2.4KW Starter)	70-287
11	Starter Post Assembly, Main Power (long post)	70-288
12	Steel Ball	70-272
13	Spring	70-273
14	Plunger Assembly	70-289
15	Insulating Boot	70-291
16	Solenoid Cover Assembly, w/Push Button	70-292
17	Fastener Kit, Starter Housing (2 Screws)	70-293
18	Fastener Kit, Starter Housing (2 Screws, 2 Washers)	70-294
19	Drive Gear, Armature	70-295
20	Idler Gear 2.0 kw	70-296
	Idler Gear 2.4 kw	70-305
21	Bearing and Shaft Assembly	70-297
22	Face Plate, 2.0 KW, Starter Housing	70-298
	Face Plate, 2.4 KW, Starter Housing	70-306
23	Bearing, Clutch, 6004 Series	70-257
24	Clutch Assembly	70-247
25	Spring	70-248
26	Output Shaft, Starter	70-249
27	Starter Post Assembly, Solenoid to Starter (short post)	70-300

1

ULTIMA® THUNDER FIRE™ HEAVY DUTY STARTERS FOR 1965 THRU 1986 MODEL BIG TWINS


70-230


70-231


70-232


70-233

Our Starters are designed to replace the obsolete designs of the Prestolite and Hitachi starters used on 1965 thru 1986 model Big Twins. Based on all new tooling some of these models will offer over two times as much cranking power over their older designed counterparts. These starters boast a 1.4 + KW rating and will turn over Stockers and Strokers with ease. These are a highly recommended upgrade for older models.

70-231 1980/1985 FLT, FLHT, FXR models rubber mounted engine, 5 speed transmission and exposed rear chain.
70-230 All Big Twin models 1986 thru 1988.
70-232 1979/Early '84 models with 4 speed transmission and rear chain drive.
70-233 All Big Twin models 1967/ Early 1979 with solid mount engine.

THUNDER FIRE® HEAVY DUTY STARTERS FOR 1981/ 2007 SPORTSTERS®


70-234

These starters boast a 1.4 + KW rating and will turn over Stockers and Strokers with ease. These are a highly recommended upgrade for 1981 thru 2007 Sportster® models.

70-234 1981 / 2007 Sportster® models.

A. *ULTIMA® THUNDER FIRE™ PRESTOLITE-TYPE STARTER MOTORS*

Fits FL 1966 thru 1981, FLT 1980 thru 1982, FXR 1982, XL 1967 thru 1973, and XL 1977 thru 1980.

A fine restoration item, this reproduction of the H-D® OEM Prestolite electric starter motor is available in chrome or black. We also offer many of the replacements parts for this starter motor.

70-130 Complete black starter motor assembly. OEM 31458-66A. SOLD EACH

70-131 Complete chrome starter motor assembly. OEM 31458-66A & 31463-88T. SOLD EACH



B. *REPLACEMENT PARTS FOR PRESTOLITE-TYPE STARTER MOTORS*

70-133 Armature for above starter motors. OEM 31542-66. SOLD EACH

70-134 4-Brush set for above starter motors. OEM 31541-66. SOLD AS SET

70-135 Complete brush holder assembly. OEM 31537-66. SOLD EACH

14-27 Prestolite starter motor bracket. Fits FL models late 1966 thru 1982 and Classic 1979 thru 1981. Replaces OEM 31476-66. Chrome plated. SOLD EACH

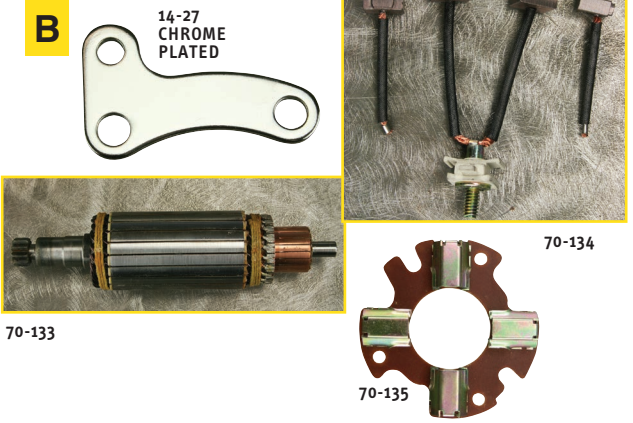

C. *ULTIMA® THUNDER FIRE™ HITACHI-TYPE STARTER MOTORS*

Fits FL 1982 thru 1984, FXR & FLT 1983 thru 1988, FXST 1984 thru 1988, FXE 1974 thru 1988, and XL 1974 thru 1976.

A reproduction of the H-D® OEM electric starter motor used on many applications from 1973 thru 1987 is available in chrome or black. We also offer many of the replacements parts for this starter motor.

70-138 Complete black starter motor assembly. OEM 31570-73. SOLD EACH

70-139 Complete chrome starter motor assembly. OEM 31570-73 & 31559-89T. SOLD EACH



D. *REPLACEMENT PARTS FOR HITACHI-TYPE STARTER MOTORS*

70-142 4-Brush set for above starter motors. OEM 31582-73. SOLD AS SET

70-143 Complete brush holder assembly. OEM 31581-73. SOLD EACH

70-144 Drive gear end ball bearing. OEM 31583-73. SOLD EACH

70-145 Thru-bolt kit. OEM 31576-73. SOLD AS KIT

14-26 Battery and Hitachi starter motor bracket. Fits FXE 1973 thru 1984. Chrome plated. SOLD EACH

E. *ULTIMA® THUNDERFIRE STARTER PUSH BUTTON*

70-330 Fits all OEM style 89' and later 1.2kw, 1.4kw and 1.75kw starters. Same part used on all Thunderfire 1.4 and 1.75kw starters. SOLD AS KIT





F. *DIRECT STARTER BUTTON*

17-301 Fits Big Twin 1990 & later, and Sportster® 1995 & later. SOLD EACH

1



A



B

ALL PARTS CHROME PLATED

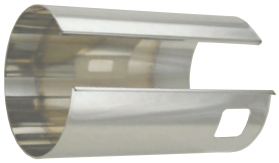

89-1

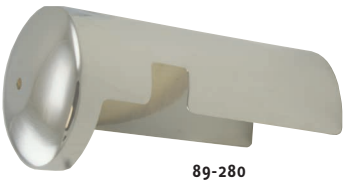

89-280

C



53-457



53-284

D



53-288

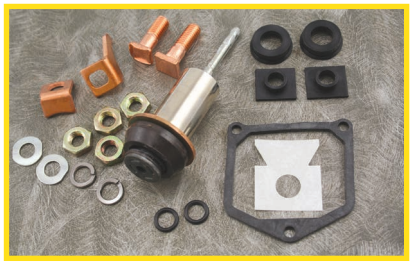

70-184



53-289

A. *VICTORY® STARTER 1999/2008*

70-331 OEM replacement, all Victory® models, 1999/2008. Silver.

70-332 OEM replacement, all Victory® models, 1999/2008. Black.

B. *STARTER COVERS*

89-1 For Prestolite starter motor on FL 4 speed (except Classic) 1966 thru 1982, and XLH 1967 thru 1980. OEM 31350-83T. SOLD EACH

89-280 For all 5 speeds 1980 thru 1988. OEM 31507-87T.

C. *ULTIMA® REPLACEMENT SOLENOIDS*

PART NO.		REPLACES OEM NO.	YEAR	MODEL
53-284	Chrome finish	71469-65B	1967/1978	XLH, XLCR & XLT.
53-456	Zinc finish,	1965/1984	FL & FLH (except FLT).	
			1971/1985	FXE, FXEF & FXS
			1979/1985	FXE-80, FXEF-80 & FX-80
			1980/1985	FXB.
			1984/1988	FXST
			1983/1985	FXSB.
			1985 & 1986	FXWG.
53-286	Chrome finish	31489-79B	1980/1988	FLT.
53-457	Zinc finish,		1984/1988	FLT Classic.
			1982/1988	FXR.
			1984/1988	FXRP.
			1984/1988	FXRP.

SOLD EACH

D. *SOLENOID REPAIR KITS*

53-288 Repair kit for Big Twins 1965-1988 & Sportster® 1967-1980. OEM 71465-85T. SOLD AS KIT

70-184 Repair kit for Big Twins 1991 & later. OEM 31604-91.

53-289 Repair kit for Big Twins 2006 & later. OEM 31604-06.

E. *SOLENOID COVER*

Fits all models 1991 & later except V-Rod®.

89-8 Chrome cover. Replaces OEM 31783-00 & 31688-90. SOLD EACH

F. *BENDIX STARTER GEAR SHIFT LEVERS*

53-294 Fits Big Twin 1965 thru 1980. OEM 31445-65A.

E



CHROME PLATED

F



53-294

A. *ULTIMA® THUNDER FIRE™ PRESTOLITE-TYPE STARTER MOTORS*

Fits FL 1966 thru 1981, FLT 1980 thru 1982, FXR 1982, XL 1967 thru 1973, and XL 1977 thru 1980.

A fine restoration item, this reproduction of the H-D® OEM Prestolite electric starter motor is available in chrome or black. We also offer many of the replacements parts for this starter motor.

70-130 Complete black starter motor assembly. OEM 31458-66A. SOLD EACH

70-131 Complete chrome starter motor assembly. OEM 31458-66A & 31463-88T. SOLD EACH



B. *REPLACEMENT PARTS FOR PRESTOLITE-TYPE STARTER MOTORS*

70-133 Armature for above starter motors. OEM 31542-66. SOLD EACH

70-134 4-Brush set for above starter motors. OEM 31541-66. SOLD AS SET

70-135 Complete brush holder assembly. OEM 31537-66. SOLD EACH

14-27 Prestolite starter motor bracket. Fits FL models late 1966 thru 1982 and Classic 1979 thru 1981. Replaces OEM 31476-66. Chrome plated. SOLD EACH

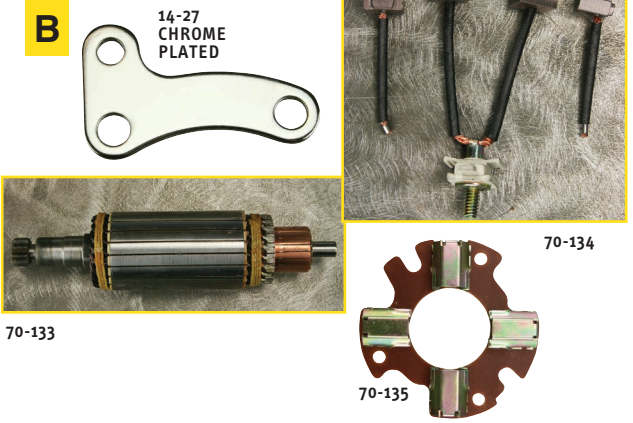

C. *ULTIMA® THUNDER FIRE™ HITACHI-TYPE STARTER MOTORS*

Fits FL 1982 thru 1984, FXR & FLT 1983 thru 1988, FXST 1984 thru 1988, FXE 1974 thru 1988, and XL 1974 thru 1976.

A reproduction of the H-D® OEM electric starter motor used on many applications from 1973 thru 1987 is available in chrome or black. We also offer many of the replacements parts for this starter motor.

70-138 Complete black starter motor assembly. OEM 31570-73. SOLD EACH

70-139 Complete chrome starter motor assembly. OEM 31570-73 & 31559-89T. SOLD EACH



D. *REPLACEMENT PARTS FOR HITACHI-TYPE STARTER MOTORS*

70-142 4-Brush set for above starter motors. OEM 31582-73. SOLD AS SET

70-143 Complete brush holder assembly. OEM 31581-73. SOLD EACH

70-144 Drive gear end ball bearing. OEM 31583-73. SOLD EACH

70-145 Thru-bolt kit. OEM 31576-73. SOLD AS KIT

14-26 Battery and Hitachi starter motor bracket. Fits FXE 1973 thru 1984. Chrome plated. SOLD EACH

E. *ULTIMA® THUNDERFIRE STARTER PUSH BUTTON*

70-330 Fits all OEM style 89' and later 1.2kw, 1.4kw and 1.75kw starters. Same part used on all Thunderfire 1.4 and 1.75kw starters. SOLD AS KIT





F. *DIRECT STARTER BUTTON*

17-301 Fits Big Twin 1990 & later, and Sportster® 1995 & later. SOLD EACH

1

STARTER DRIVE PARTS

SOLD EACH EXCEPT AS NOTED — ALL PARTS MEET OR OR EXCEED OEM SPECIFICATIONS

1	**95-413**	THRUST WASHER FL & FX 1965/1985 (OEM 31502-65) SOLD AS PAIR
2	**95-226**	NEEDLE BEARING (OEM 9063)
3	**96-310**	RET. RING (OEM 11039) **U.S.A. MADE**
4	**78-155**	GASKET FL, FLH & FX, 1965/1982 (OEM 60559-80)
5	**70-111**	STARTER SHAFT FL 1970/1982 FX 1971/1983 EXCEPT FXB & FXSB (OEM 31482-70)
6	**53-295**	OIL DEFLECTOR PLATE 1965/1982 (OEM 60516-65A)
7	—	STARTER SHAFT BEARING TORRINGTON (OEM 9062)
8	**70-109**	STARTER HOUSING PRESTOLITE TYPE STARTER. 1965/E. 1979. (OEM 31465-65)
	70-110	STARTER HOUSING HITACHI TYPE STARTER 1973/E. 1979. (OEM 31572-73)
9	**96-241**	LOCKWASHER (OEM 7036)

BIG TWIN 1965 THRU 1982

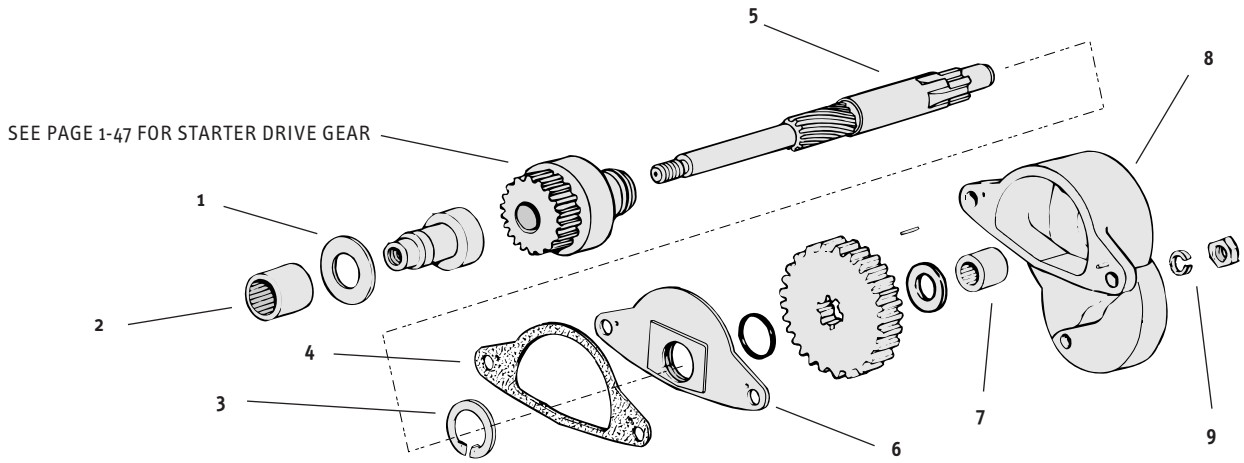

BELT DRIVE BIG TWIN 4 SPEED 1982 & LATER

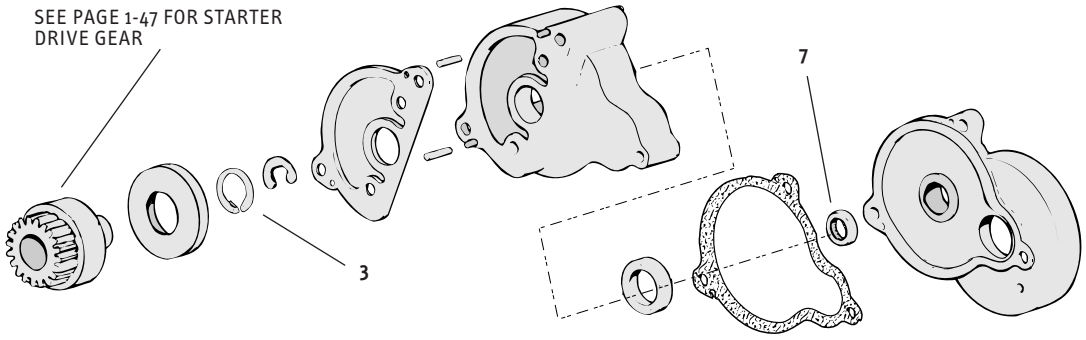

SPORTSTER® 1967 THRU 1980

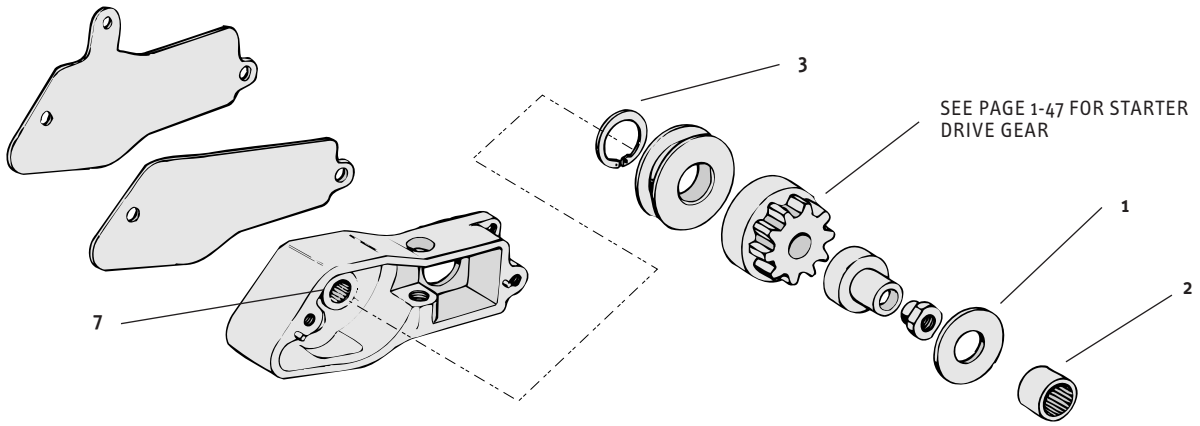

A. *ELECTRIC HORN*

This air horn produces total sound output of 107 decibels. Ideally suited for application on motorcycles and autos where mounting space is limited and air horns cannot be used. Relay, brackets and hardware included in blister packed set.

16-17 Electric horn, 107 decibles. SOLD AS SET

B. *H-D® STYLE ELECTRIC HORN*

Early style horn.

16-18 12V Horn. SOLD EACH

C. *ELECTRIC HORN*

2-1/2" dia., 12V horn, chrome.

16-24 Chrome, 12V Horn. SOLD EACH

D. *HORN COVER*

Stock style horn cover. Chrome plated.

89-414 Fits 1986 thru 1992 Sportster® and 1991 & 1992 FLT & Softail®. OEM 69012-86A. SOLD EACH

E. *SINGLE HORN*

High quality chrome finish. Comes with mounting bracket.

16-21 6 Volt horn. SOLD EACH

16-22 12 Volt horn.

F. *CUSTOM UNIVERSAL HORN WITH COVER*

This 12V horn with spade style terminals has a universal mounting bracket and a chrome plated snap-on cover.

16-32 12 Volt universal horn. SOLD EACH

G. *IGNITION STARTER SWITCH*

This starter switch has fast become a custom builder's favorite due to its many features. Designed for marine use, it has special weatherproofing & stainless steel terminals. Push key for choke can be used to activate horn. Overall length 2", diameter 1-1/2", mounting hole 13/16", with flat side so switch can't turn in hole. Furnished with terminal hardware, mounting nut and two keys. May also use with magneto. Switch housing is made of Black Delrin — "strong stuff."

17-1 Ignition starter switch. SOLD EACH

H. *IGNITION SWITCH, IGNITION-STARTER SWITCHES*

17-21 **U.S.A. MADE** 3 Way ignition switch: left accessories, center off, right accessories & ignition. Mounts thru 3/4" hole. SOLD EACH

17-27 **U.S.A. MADE** 4 Way ignition switch: left accessories, center off, right accessories & ignition, extreme right start. Four stud terminal. Mounts thru 3/4" hole.

I. *QUICK-START IGNITION STARTER SWITCHES*

Quick-Start ignition starter switches are water & vibration resistant, includes a chromed retaining nut to hold firmly in place. Switch has Off / On / Start function (key spring returns to run/on position, works like a auto ignition) Sold each.

17-22 Quick-start auto style ignition switch w/standard key x2

17-23 Quick-start auto style ignition switch w/barrel key x2













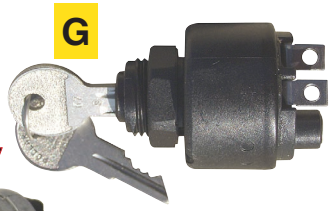







1

A



CHROME PLATED



17-74

B



C



17-45



17-803

D



17-84

CHROME PLATED



17-124

E

CHROME PLATED

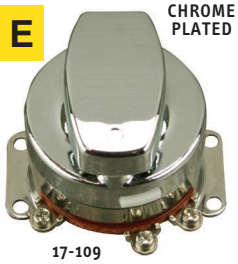

17-109





F



CHROME PLATED

A. *IGNITION SWITCHES*

17-74 Fits FX, FXE, XLH & XLCH, 1973 thru 1977. OEM 70124-75. **SOLD EACH**

17-60 Fits FX 1978 thru 1985, FXR 1982 thru 1988 and XL 1978 thru 1988. OEM 71425-77.

B. *FAT BOB® STYLE IGNITION SWITCH with ROUND KEY*

Switch fits FLH, FLHR, and FXDWG models, 1995 & later, and all Softail® models 1996 & later.

17-115 Switch with round key. Replaces OEM 71501-93 & OEM 714313-96. **SOLD EACH**

C. *CHROMED IGNITION SWITCH*

For Big Twin. Replaces OEM 7150136A. Both early cover included.

17-45 Switch with covers & keys. **SOLD EACH**

17-801 Mechanical switch with round key.

17-803 Stainless steel mechanical switch with round key.

D. *ROUND KEY IGNITION SWITCHES*

Now the ignition can have the security of a round key with multi-position switch. Key won't fall out in the "Off" position. Fits all FXR & XL, FX 1973 thru 1985, and all FXD. OEM 71428-90A. Easy installation.

17-84 Two-position switch. **SOLD EACH**

17-124 Three-position switch.

E. *FAT BOB® STYLE ELECTRONIC IGNITION SWITCHES*

Reproduction of late style switch retrofits to earlier models to give the ease of electronic ignition. Resists corrosion & vibration. Includes reversible keys and both styles of switch caps.

17-109 Switch with all stainless steel construction (best quality). **SOLD EACH**

17-802 Standard switch with round key.

17-85 Standard switch.

17-804 Stainless steel switch with round key.

F. *CHROME SWITCH COVER FOR RELOCATION*

Chrome cover-up for when you custom mount the ignition switch. Can be used with our part No. **5-218** heavy duty motor mount.

17-25 Custom cover for relocated ignition switch. **SOLD EACH**

G. *KEY SWITCH PLATES*

17-3 Universal. Mounts anywhere. 3/4" Switch hole. **SOLD EACH**

17-9 Locates switch on transmission cover forward or rear of kicker arm on Big Twin. 3/4" Switch hole.

G





CHROME PLATED

A. *OIL PRESSURE SWITCHES*

Protect your Harley's® engine with reliable **U.S.A. MADE** oil pressure switches. These oil pressure switches are designed to stringent quality control specifications, assuring accurate pressure thresholds. Heavy-duty electrical contacts, brass pressure ferrules, rugged thermoplastic insulators, and corrosion-resistant plated steel shells are used for maximum dependability.

PART NO.	OEM NO.	YEAR	MODEL
17-61	26552-72	1980/1992	FL, FLHT & FLH-80.
		1980/1983	FLT & FLHT.
		1982 & 1983	FXR, FXRS & FXRT.
		1971/1984	FX, FXE, FXS1200, FXEF-80, FXS-80, FXB-80 & FXWG-80.
17-64	26554-77	1977/2009	Sportster®
17-65	26561-84	1984/1986	All FX Models
		1987/1992	All FXR Models
		1984/1999	All Softail® Models
		1991/1999	All Dyna Wide Glide® models.
		1986	FXR
		1984 & 1985	FXRT & FXRS.
		1984 & 1985	FLT Classic, FLHT Classic.
39-148	26561-99	1999/2008	Dyna®, Touring®
		2000/2008	Softail®
		2003/2008	V-Rod®

SOLD EACH

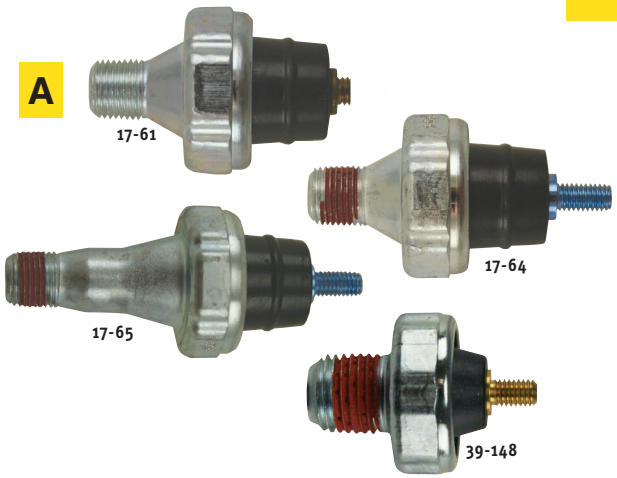

B. *TRANSMISSION NEUTRAL SWITCHES*

17-72 Replaces OEM 33900-59. Fits FL & FLH 1959 thru 1964, FX late 1973 thru early 1979, FXST 1986, FLT/FXR/FXST/FLST 1987-1997, XL 1986-1998.

17-703 Replaces OEM 33901-79. Fits Big Twin 4 speed 1979 & later.

17-702 Replaces OEM 33904-00. Fits Softail® 2000/2006, 2001/2005 Dyna® and Touring models 2001/2006.

17-701 Replaces OEM 33902-98. Fits Softail® 1998/2000, Dyna® and FLT 1998 thru 2000, and V-Rod 2008.

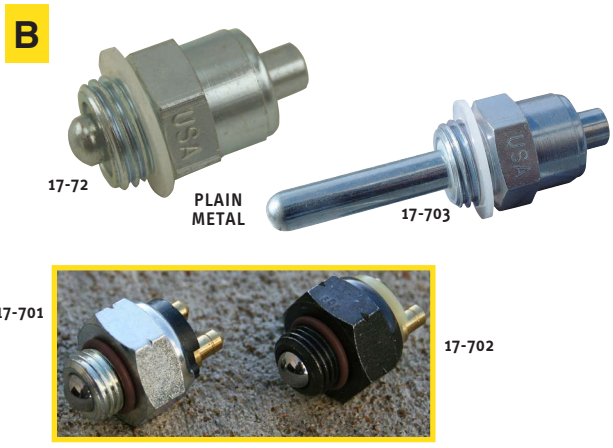

C. *STOPLIGHT SWITCHES for H-D® HYDRAULIC BRAKES*

PART NO.	OEM NO.	YEAR	MODEL
17-43	72002-51A	1951/1973	Servi-Car 750cc/45").
		1958/1970	FL & FLH(1200cc/74").
17-44	72023-51A	1979/2002	XL, all models.
		1971/1984	FL (1200cc/74", 1340cc/80").
		1971 & 1972	FX (1200cc/74").
	Late	1979/1983	FX (1200cc/74", 1340cc/80").
		1982 & 1983	FXR (1340cc/80").
		Late 1984 & Later	All Evolution® Big Twin Twin (1340cc/80", including
		1991 & 1992	Dyna Wide Glide®).

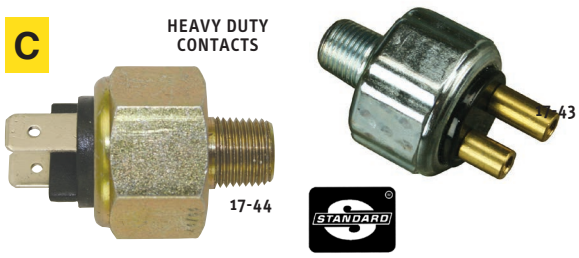



D. *HYDRAULIC STOPLIGHT SWITCH*

Spade type switch features Bakelike insulators, heavy duty contacts and high conductivity brass terminals.

PART NO.	OEM NO.	YEAR	MODEL
17-48	72023-51E	2005-2007	Dyna®
		2007-2015	V-Rod®
		2003-2019	Touring, Sportster®
		2004-2019	Softails®

1

A





A. *BRAKE SWITCH BANJO BOLT*

21-419 Banjo bolt w/built-in brake switch, 3/8-24 thread. SOLD EACH

21-619 Banjo bolt 7/16-24 thread. SOLD EACH

B



B. *UNIVERSAL LUCAS TYPE STOP LIGHT SWITCH*

Virtually waterproof. Enclosed terminals. Swivel mounted 5" length.

17-19 Universal application on motorcycles, mini-bikes and snowmobiles. SOLD EACH



C. *BRAKE LIGHT SWITCH ASSEMBLY*

17-40 Fits H-D® 74 C.I. mechanical brake. Chrome plated Includes OEM 72003-34 & 42280-35.

17-70 Fits H-D® 74 C.I. mechanical brake. Black Includes OEM 72003-34 & 42280-35.

NEW!

C

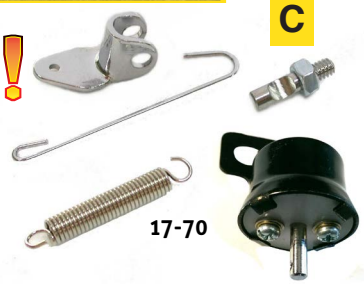

D. *REAR STOPLIGHT SWITCH for FX*

Rear push type stoplight switch for FX 1973 thru 1977.

17-75 Rear stoplight switch. Replaces OEM 72005-73A. SOLD EACH

E. *STOPLIGHT SWITCH for SPORTSTER®*

Push off type switch for 1967 thru 1974 Sportster® rear brakes. Can also be used on many custom applications where the brake pedal pushes against the switch for the off position. Replaces OEM 72004-70.

17-58 Stoplight switch. SOLD EACH

D

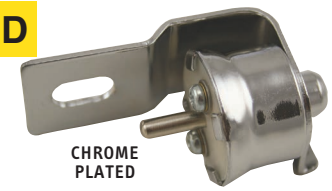

E



F. *HEAVY DUTY STARTER SWITCH*

This is by far the best **U.S.A. MADE** custom switch you could install. Look at the list of features incorporated into this universal mounted push button switch:

- 60 Amps at 12V.
- Housing rolled over insulator to seal out dust & moisture.
- Silver contacts.
- Black molded plunger.
- Chrome plated protection collar prevents accidental start.
- Combination screw and 1/4" male blade terminal with locking hole.

17-82 Mounting stem 5/8" long, 5/8" diameter, 1-13/16" overall length. SOLD EACH

F

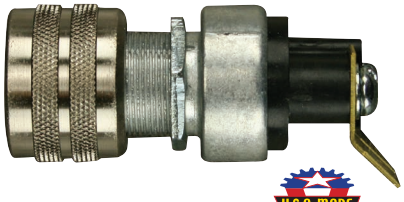

G



G. *STAINLESS PUSH BUTTON SWITCHES*

Heavy duty 12v switch measures 7/8" dia. and flush mounts to any flat surface.

17-133 Polished stainless push button switch. SOLD EACH

H

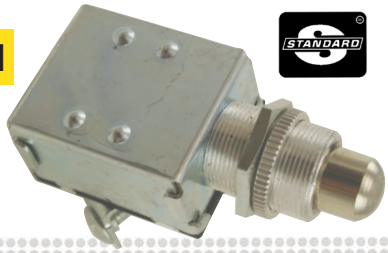

H. *UNIVERSAL PUSH BUTTON STARTER SWITCH*

Universal insulated switch with two screw terminal. Mounts through 5/8" hole.

17-30 SOLD EACH

A. *HANDLEBAR PUSH BUTTON SWITCH*

17-35 Handlebar starter or horn switch to fit H-D®. OEM 71800-26A. — SOLD EACH

B. *MINI PUSH BUTTON SWITCH*

12mm Round small stainless steel push button switch includes a special radius shaped spacer for in-handlebar mounting. Must be used with a switch relay. May be used for turn signal, starter, horn, kill, or high / low. With the spacer removed, it can be installed on flat surfaces.

17-131 Mini switch. Installation requires a 9/32" (7.1mm) drill and 5/16" UNF tap. Includes two 20" wires. — SOLD EACH

C. *HEAVY DUTY TOGGLE SWITCHES*

U.S.A. MADE toggle switches available in 2 position on-off or 3 position on-off-on. Butt mount thru 1/2" hole.

17-46 2 Position, on-off. — SOLD EACH
17-47 3 Position, on-off-on.

D. *HORN & HEADLIGHT DIP SWITCH*

17-41 Switch for 7/8" diameter. — SOLD EACH
17-42 Switch for 1" diameter.

E. *HANDLEBAR SWITCH*

17-36 Handlebar light switch to fit H-D®. Replaces OEM 71840-29. — SOLD EACH

F. *HORN BUTTON / KILL SWITCH*

Compact horn button/kill switch.

17-5 Switch for 1" diameter. — SOLD EACH

G. *HANDLEBAR CONTROL SWITCHES FOR H-D® 1971 THRU 1981*

These replacements for OEM units are available factory color black or chrome as listed below. SOLD EACH

CHROME	BLACK	OEM NO.	DESCRIPTION
17-87	**17-53**	71547-75	Rocker switch run/off.
17-88	**17-54**	71546-75	Rocker switch hi/low.
	17-49	72001-69A	Handlebar stoplight switch.
	17-51	71484-72	Switch for starter, horn, or turn signal on H-D® handlebar controls.
17-89	**17-50**	71535-72	Long button cap for turn signal handlebar switch.
17-90	**17-52**	71534-72	Short button cap for turn signal handlebar switch.

A



CHROME PLATED

B



C

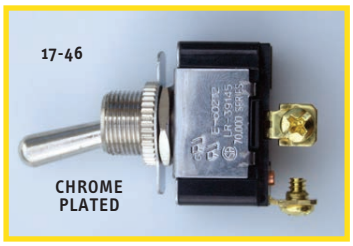

U.S.A. MADE

D



E



CHROME PLATED

F

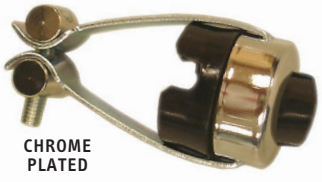

CHROME PLATED

G



17-87



17-53



17-88



17-54


17-49


17-51


17-89 17-50


17-90 17-52

1



47-276

A



47-277

A. *HANDLEBAR CONTROLS WITH LED BACKLIGHT*

Handlebar control switch kits with LED backlight displays for all the symbols. Includes 60" of wiring, terminals & hardware. **SOLD AS KIT**

47-275 Fits 2007-up Softail® & Dyna® models, chrome switch.
47-276 Fits 2007-up Softail® & Dyna® models, black switch.
47-277 Fits 1996-2006 Softail® & Dyna® models, chrome switch.
47-278 Fits 1996-2006 Softail® & Dyna® models, black switch.

B. *DIMMER SWITCH*

Cateye dash mounting plate dimmer switch with knob. Includes two rivets and set screw. OEM 71600-39.

17-57 Fits part No. **21-129** cateye mounting plate. **SOLD EACH**

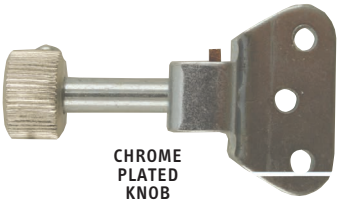

CHROME PLATED KNOB

B

C. *BLUE STREAK VOES*

VACUUM OPERATED ELECTRICAL SWITCHES

High quality **U.S.A. MADE** vacuum operated electrical switches for use as direct replacements or custom bike building.

DIRECT OEM REPLACEMENTS **SOLD EACH**

PART NO.	OEM NO.	YEAR	MODEL
53-650	26558-84	1986/1993 1984/1990 1986/1989	All Sportsters®. FXST. FLT.
53-651	26557-83	1983/1985 1984/1990	XL, XLS & XLX. All FXR.
53-652	26566-91	1991/1995	All FXST & FLST.

C

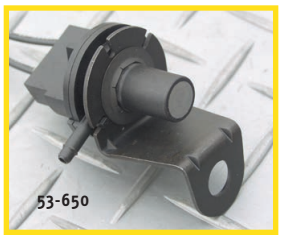

53-650

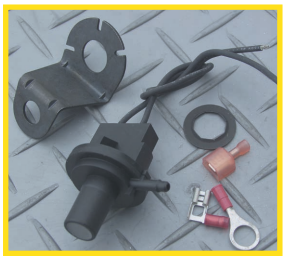

53-655

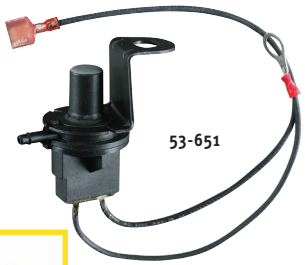

53-651

SELF ASSEMBLY KITS **SOLD EACH**

53-653 Set at 3" of mercury.
53-654 Set at 4" of mercury.
53-655 Set at 5" of mercury.
53-656 Set at 6" of mercury.

D. *ULTIMA® SPEEDOMETER RECALIBRATION MODULE*

A speedometer recalibration module is required when changing the gearing or tire size on a motorcycle that doesn't have a programmable speedometer. This module adjusts the output of the speedometer sensor so that the speedometer registers the correct MPH.

17-152 Speedometer recalibration module **SOLD EACH**

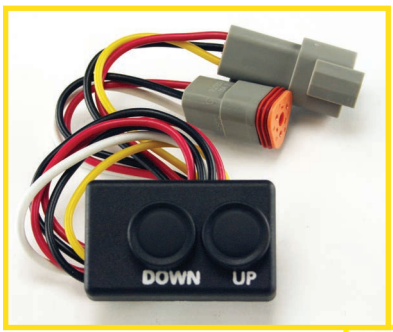

D

E. *ULTIMA® SPEEDOMETER SENSORS*

Used to send electronic pulses to the speedometer from 5 & 6 speed transmissions. A = protrusion depth

17-149 Speed sensor, OEM 74402-95B A = 1.190" SOLD EACH
17-150 Speed sensor, OEM 74420-94C A = 0.810" SOLD EACH
17-151 Speed sensor, OEM 74437-96 A = 0.810" SOLD EACH

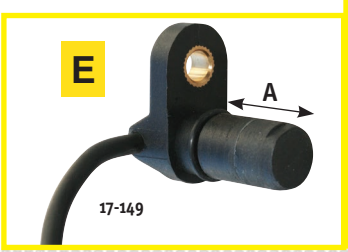

17-149



17-150

DEUTSCH CONNECTORS

A. DEUTSCH RECEPTACLES

REQUIRE DEUTSCH OPEN OR SOLID CRIMP PINS

2-WIRE CONNECTOR
18-569 Grey, OEM 72102-94GY
3-WIRE CONNECTOR
18-602 Grey, OEM 72103-94GY
4-WIRE CONNECTOR
18-604 Grey, OEM 72104-94GY
6-WIRE CONNECTOR
18-606 Grey, OEM 72106-94GY
8-WIRE CONNECTOR
18-608 Grey, OEM 72108-94GY
12-WIRE CONNECTOR
18-610 Grey, OEM 72109-94GY.

A


18-569


18-602


18-604


18-606


18-608

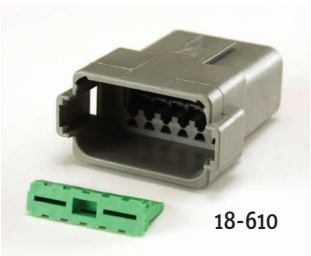
18-610

B. DEUTSCH PLUGS

REQUIRE DEUTSCH OPEN OR SOLID CRIMP SOCKETS

2-WIRE CONNECTOR
18-612 Grey, OEM 72112-94GY
3-WIRE CONNECTOR
18-614 Grey, OEM 72113-94GY
4-WIRE CONNECTOR
18-616 Grey, OEM 72114-94GY
6-WIRE CONNECTOR
18-618 Grey, OEM 72116-94GY..
8-WIRE CONNECTOR
18-620 Grey, OEM 72118-94GY.
12-WIRE CONNECTOR
18-622 Grey, OEM 72119-94GY

B

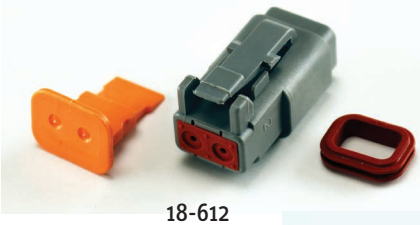
18-612


18-614

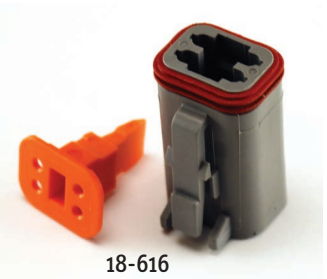
18-616


18-618

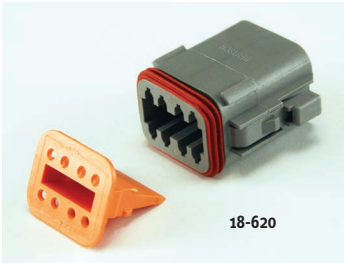
18-620

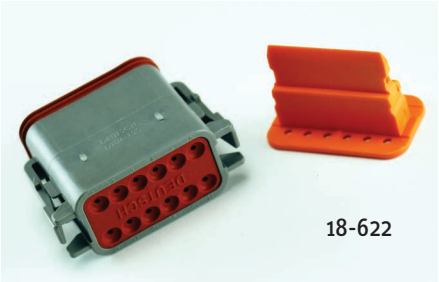
18-622

C.

SOLID PINS CLOSED STYLE

18-567 Solid Pins closed style, 16-18 guage wire, OEM 72190-98. PKG of 100.

SOLID SOCKETS CLOSED STYLE

18-568 Solid Sockets closed style, 16-18 guage wire, OEM 74191-98. PKG of 100.

C


18-567


18-568

D. CIGARETTE LIGHTER

Cigarette lighter and mounting bracket, with wire.
18-83 Cigarette lighter; fits any bike.

D



1

GASKETS

IMPORT MW#	COMETIC MW#	COMETIC REF#	OEM REF#	APPLICATION	QTY
• Starter Housing Gaskets, O-rings					
95-701	**95-842**	C9451	11101	L66'-82 Starter Oil Deflector O-ring	10
	95-834	C9433	11116	91'-99 Starter Housing O-ring	25
95-721	—	C9436	11171	89'-90 Starter Bolt O-ring	10
95-788	**95-836**	C9491	12051	L84'-88 Starter Shaft Seal	5
95-794	**95-837**	C9261	12066	94'-99 Starter Shaft Seal	5
	95-738A	C9379	12053	89'-93 Starter Shaft Seal	5
	78-450	C9507	31320-80	80'-86 Starter Housing Gasket	10
	78-451	C9508	31321-80	80'-86 Starter Cover Gasket	10
	95-781	C9509	31341-80-DL	80'-86 Starter Shaft Seal	5
	78-566	C9717	60518-65	65'-88 Starter Hole Block Off Gasket	10
	78-439	C9330	60559-80	65'-85 Starter Housing Gasket	10
	78-149	C9702	60645-65	65'-84 Solenoid Mount Gasket	10

IMPORT MW#	COMETIC MW#	COMETIC REF#	OEM REF#	APPLICATION	QTY

1957-85 XL IRONHEAD SPORTSTER® INDIVIDUAL REPLACEMENT GASKETS,SEALS, O-RINGS

• Charging and Starting Gaskets					
95-707		C9433	11116	81'-85 Starter Housing O-ring	25
	78-666	C9701	31461-70	70'-E79 Starter hole cover plate Gasket	10
	78-416	C9324	31471-67A	67'-80 Starter Housing Gasket	10
	78-417	C9333	31488-77	67'-80 Starter Housing Mount Gasket	10
	78-418	C9312	31488-81	81'-85 Starter Motor Gasket	10
	78-149	C9702	60645-65	67'-80 Solenoid Gasket	10
95-730		C9369	12023	68'-69 XLCH Magneto Seal	5
	78-412	C9327	29550-55	58'-69 XLCH Magneto Cover Gasket	10
	95-762	C9374	29603-48	58'-E65 Magneto Seal	10
	78-415	C9321	30143-58	58'-E84 Generator Gasket	5

MISCELLANEOUS GASKETS

MW#	OEM REF#	APPLICATION	QTY
95-752	25811-11	Generator gear stud washer for 1932 thru 1973 W, WL, G & GE	20
78-413	30138-30	Generator end cover gasket for 1932 thru 1957 W, G, EL, UL & ULH	10
78-449	35607-73	Speedometer hole cover gasket for 1973 thru 1979 FX & FXE	10

Frame & Body Fenders, Mounts, Shocks, Footboards



CUSTOM FRAMES, HARDTAILS,
STRUTS, FOOT PEGS,
FENDERS, SHOCKS,
MOTOR MOUNTS, SIDE STANDS,
HIGHWAY BARS & FOOTBOARDS

2

ULTIMA® 250 SERIES RIGID STYLE FRAME

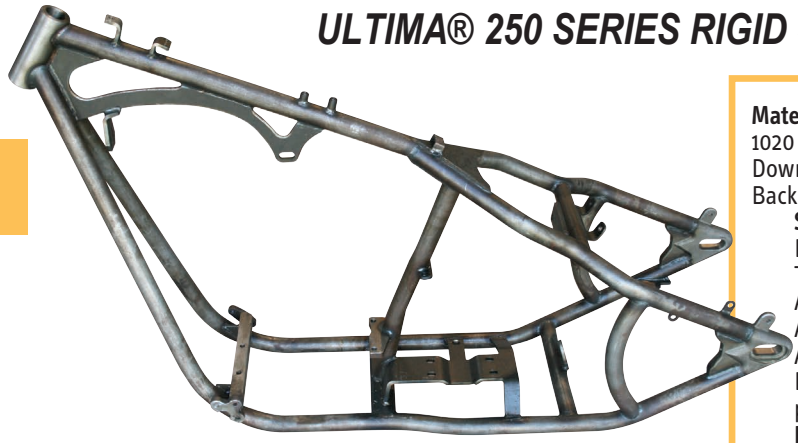

85-101 250 Ultra-wide rigid frame with 34°rake, 4" stretch downtubes, 24-1/2" backbone. SOLD EACH

Material:
1020 DOM (Drawn Over Mandrel) steel tubing.
Downtube legs are 1-3/8" O.D. for double downtube frames.
Backbone and seat post are 1-1/2" O.D.

Special features:
Hidden axle design.
TIG Welded.
Accepts 11" fender.
Accepts Softail® style oil tank.
Accepts 250 rear tire with full width 1.5" belt.
Integral 5th bolt mounting within reinforced offset trans plate.

Included additionally:
1" Dia. rear axle kit (not shown).
Front oil tank mounts (not shown).

NOTE 1: Requires a 1-1/4" engine-to-inner primary spacer.
NOTE 2: Backbone is measured from back of neck to front of seat plate gusset. Downtube is measured from bottom of neck to top of cradle tube joint.

ULTIMA® 200 SERIES RIGID STYLE FRAME

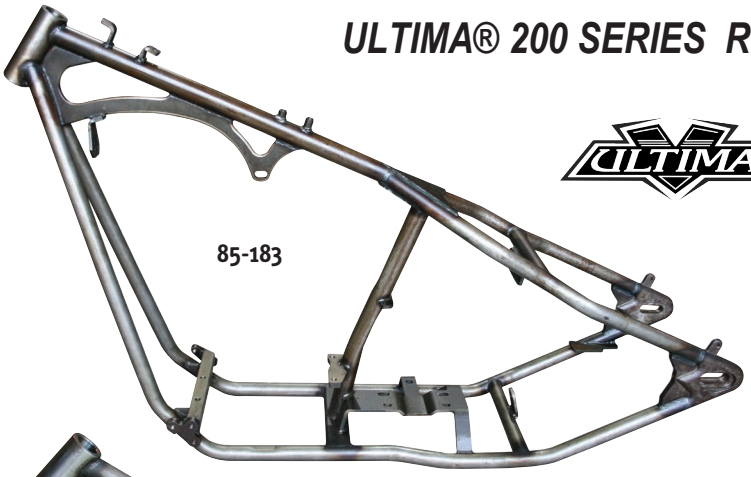

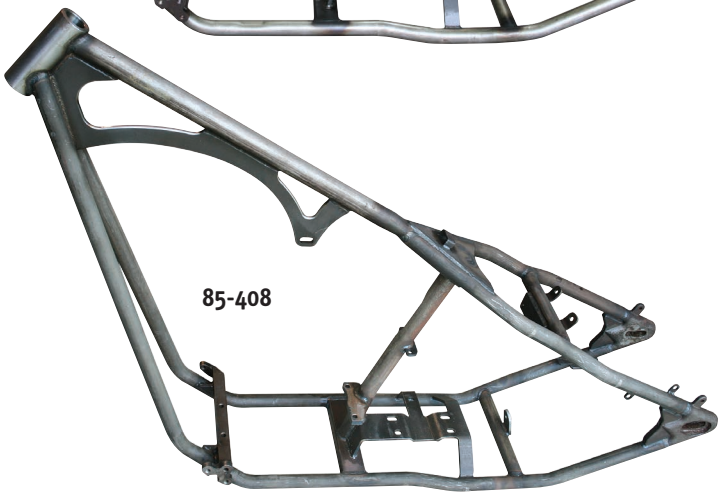

Material:
- 1020 DOM (Drawn Over Mandrel) steel tubing.
- Legs are 1.25" O.D. with .125" thick wall.
- Backbone is 1.50" O.D. with .219" thick wall.
- Seat post is 1.50" O.D. with .219" thick wall.

Included additionally:
- Rear axle & axle hardware.
- Front oil tank mounts.

Special features:
- Hidden rear axle design.
- TIG Welded at stress points.
- Accepts 9" fender and 1984 & later flat side gas tanks.
- Accepts Softail® style oil tank, Softail® style rear brake 1987 & later and up to 200 series tire with belt.
- Accepts 200 series tire with use of 1/2" offset kit (not included, see below).

85-183 200 Series Wide Rigid frame with tank mounts. 34° rake, 4" stretch downtubes. SOLD EACH

85-408 200 Series Wide Rigid frame, 38° rake, 8" stretch downtubes. Does not include flat side Fat Bob mounts. SOLD EACH

ULTIMA® 200 SERIES SOFTAIL® STYLE FRAMES

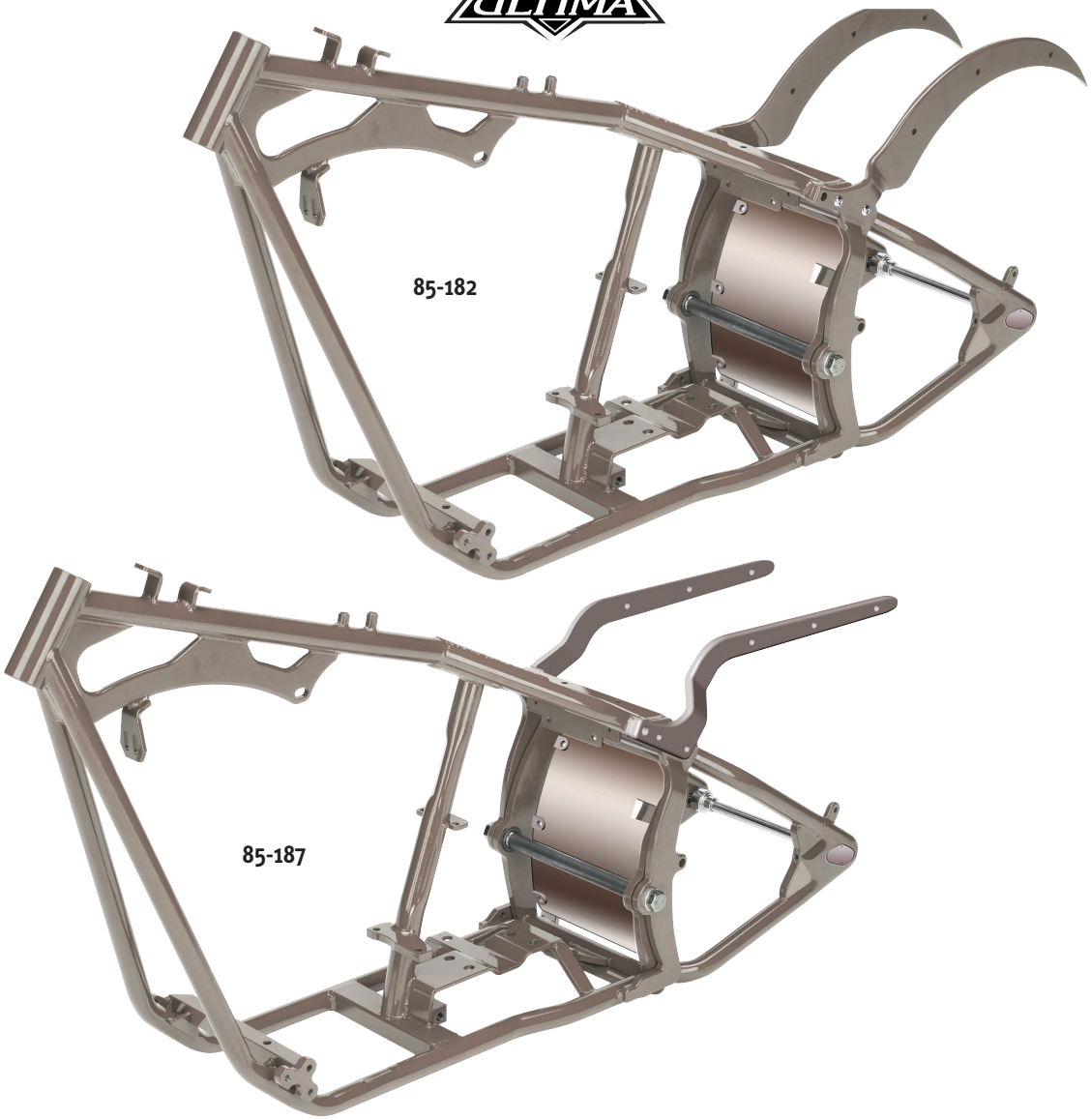

85-182 200 Series Wide Softail® style frame with 34˚ rake, 2" stretch downtubes, 1.5" stretch backbone, radius fender struts. SOLD EACH

85-187 200 Series Wide Softail® style frame with 34˚ rake, 2" stretch downtubes, 1.5" stretch backbone, straight fender struts. SOLD EACH

Material:
- 1020 DOM (Drawn Over Mandrel) steel tubing
- Legs are 1.25" O.D. with .125" thick wall
- Backbone is 1.50" O.D. with .219" thick wall
- Seat post is 1.50" O.D. with .219" thick wall.

Special features include:
- TIG Welded.
- Heavy duty swing arm pivot for high horsepower transfer.
- Accepts Softail® style oil tank.
- Accepts 200 series rear tire size.
- Radius backbone support with integrated top motor mount.
- One piece transmission mount for Evolution® style 5 and 6 speed transmission. Cast full width axle plates.
- Requires 1/2" offset, primary spacer, and motor sprocket or pulley.

Included additionally: High performance rear swing arm. Fender struts for 9" fender. Rear axle w/hardware. Rear frame pivot tube and hardware. Front oil tank mounts. Debris shield.

REPLACEMENT PARTS FOR ULTIMA® FRAMES

A. REPLACEMENT PARTS
FOR 250 ULTRA-WIDE DRIVE SOFTAIL® STYLE FRAMES

2

These parts are manufactured to provide accurate fit replacements for our frames part No. **85-100**, **85-102**, **85-104**, **85-106**, **85-107** & **85-188**. SOLD EACH

83-68 Pivot tube.
83-21 Pivot tube bolt, OEM 4961.
83-23 Pivot tube bearing, OEM 9076.
83-25 Pivot tube spacer, OEM 43283-86.
5-155 Axle adjuster kit.
33-236 Left side axle spacer.
33-237 Right side inner axle spacer.
33-238 Right side outer axle spacer.
41-180 Axle nut kit.
5-302 Seat tab.

B. REPLACEMENT PARTS
FOR WIDE DRIVE RIGID FRAME

These parts are manufactured to provide accurate fit replacements for our frame part No. **85-183 MANUFACTURED AFTER MARCH 2005**.

32-268 Axle. SOLD EACH
33-26 Axle spacer, stepped for caliper bracket.
33-27 Axle spacer, 2.025".
33-1 Axle spacer, .0750".
41-184 Rear axle kit containing all parts listed below. SOLD AS KIT

PART NO.	DESCRIPTION	
32-191	Axle nut kit.	INDIVIDUAL PARTS SOLD EACH
40-476	Set screw, 3/8 - 16 x 2"	
40-477	Allen bolt, 3/8 - 16 x 1.25".	

5-302 Seat tab.
5-303 Oil tank mount.
5-307 Rear fender mount.

These parts are manufactured to provide accurate fit replacements for our frame part No. **85-183 MANUFACTURED BEFORE MARCH 2005**.

32-260 Rear axle kit containing all parts listed below. SOLD AS KIT

OEM NO.	PART NO.	DESCRIPTION	
—	**32-269**	Axle.	
—	**32-191**	Axle nut.	
43654-86A	**33-1**	Axle spacer, .750"	INDIVIDUAL PARTS SOLD EACH
41595-73	**33-5**	Axle spacer, .830"	
41592-79	**33-6**	Axle spacer, 1.200"	

5-235 Chrome steel axle adjuster kit for Softail® 1987 thru 1999. Replaces OEM 47577-86, 47579-86 & 7783. SOLD AS KIT

5-303 Front oil tank mount. SOLD EACH

C. STRUTS
FOR 200 SERIES SOFTAIL® FRAMES SOLD EACH

104-67 Left fender strut, radius
104-68 Right fender strut, radius
104-69 Left fender strut, straight.
104-70 Right fender strut, straight.

FOR 250 SERIES SOFTAIL® FRAMES SOLD EACH

104-63 Left fender strut.
104-64 Right fender strut.

D. REPLACEMENT PARTS
FOR 200 SERIES SOFTAIL® STYLE FRAMES

These parts are manufactured to provide accurate fit replacements for our frame part No. **85-182 MANUFACTURED AFTER JULY 1, 2005**.

83-75 Rear section, hidden axle. SOLD EACH
32-268 Axle, old style.
32-280 Axle, hidden.
5-154 Axle adjuster kit.
41-184 Rear axle nut kit containing all parts listed below. SOLD AS KIT

PART NO.	DESCRIPTION	
32-191	Axle nut kit.	INDIVIDUAL PARTS SOLD EACH
40-476	Set screw, 3/8 - 16 x 2"	
40-477	Allen bolt, 3/8 - 16 x 1.25".	

41-185 Rear axle nut. SOLD EACH
41-186 Rear axle cover. SOLD EACH
5-302 Seat tab.
5-303 Front oil tank mount.
33-1 Right axle spacer, .0750".
33-26 Axle spacer, stepped for caliper bracket.
33-27 Left axle spacer, 2.025".
83-68 Pivot tube.
83-21 Pivot tube bolt, OEM 4961.
83-23 Pivot tube bearing, OEM 9076.
83-74 Splash guard.

40-684 Pivot tube spacer.

These parts are manufactured to provide accurate fit replacements for our frames part No. **85-182.**
MANUFACTURED BEFORE JULY 1, 2005.

83-69 Swing arm. SOLD EACH
5-303 Front oil tank mount.

E REPLACEMENT PARTS
FOR 250 SERIES RIGID FRAMES

These parts are manufactured to provide accurate fit replacements for our frames part No. **85-101**, **85-103**,.

32-262 Axle. SOLD EACH
32-263 Hidden Axle.
33-242 Left side axle spacer.
33-237 Right side inner axle spacer.
33-243 Right side outer axle spacer.
41-180 Axle nut kit.
5-307 Rear fender mount bracket.
5-308 Front Oil tank mount.
5-302 Seat tab.
5-303 Front oil tank mount.
5-155 Axle adjuster kit 250
41-187 Axle end caps
41-186 Axle cover

Note: Frames manufactured before July 2005 have serial numbers on the neck. Frames manufactured after July 2005 have serial nmber on the front motor mount.

OPTIONAL PARTS FOR WIDE TIRE MOTORCYCLE ASSEMBLIES

A. BIG TWIN OFFSET TRANSMISSION BASE PLATES

Offset transmission base plates help move the driveline over to the left for use with wide tires when being used with rear belt drives.

96-612 Stock plate.
96-838 1/4" Offset plate.
96-840 1/2" Offset plate.
96-862 3/4" Offset plate.
96-850 1" Offset plate.

SOLD EACH

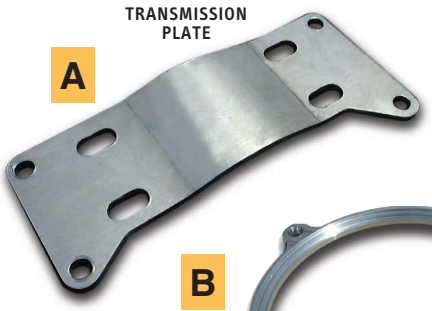

B. BIG TWIN INNER PRIMARY SPACERS

Billet 6061 aluminum spacers are used to offset the inner primary for custom wide tire applications. Used in conjunction with our offset transmission base plates, moving the driveline to the left can be a "bolt-on" operation.

96-839 1/4" Inner primary spacer.
96-841 1/2" Inner primary spacer.
96-931 1/2" Inner primary spacer (polished).
96-861 3/4" Inner primary spacer.
96-930 3/4" Inner primary spacer (polished).
96-851 1" Inner primary spacer.
96-929 1" Inner primary spacer (polished).
96-884 1-1/4" Inner primary spacer.
96-927 1-1/4" Inner primary spacer (polished).
96-885 1-1/2" Inner primary spacer.
96-928 1-1/2" Inner primary spacer (polished).

SOLD EACH

96-840 Transmission plate for Softail® with 1/2" offset. SOLD EACH

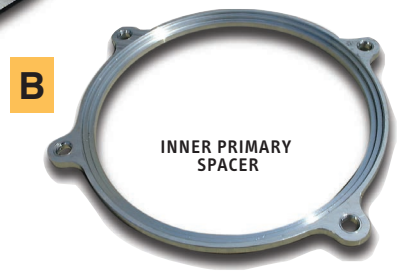

C. REAR PULLEY / SPROCKET SPACERS

Machine finish rear pulley sprocket spacers. **U.S.A. MADE**.

1999 & earlier hubs

58-180 .125" Spacer (1/8").
58-380 .250" Spacer (1/4").
94-389 .3125" Spacer (5/16").
58-381 .375" Spacer (3/8").
58-382 .500" Spacer (1/2").
58-383 .750" Spacer (3/4").
58-384 .937" Spacer (15/16").
58-385 1.10" Spacer (1-7/64").
58-386 1.25" Spacer (1-1/4").

2000 & later hubs

58-580 .125" Spacer (1/8").
58-581 .250" Spacer (1/4").
58-582 .3125" Spacer (5/16").
58-583 .375" Spacer (3/8").
58-584 .500" Spacer (1/2").
58-585 .750" Spacer (3/4").
58-586 .937" Spacer (15/16").
58-587 1.10" Spacer (1-7/64").
58-588 1.25" Spacer (1-1/4").



REAR PULLEY / SPROCKET SPACER

D. BIG TWIN SHIFTER & BRAKE BRACKET SPACERS

Sometimes you need to move your controls over when running wide frame conversions. Sometimes you need extra clearance between the exhaust and cam cover. **U.S.A. MADE**.

47-310 1/2" Shifter/kickstand bracket spacer.
47-312 1/2" Brake side bracket spacer.

SOLD EACH

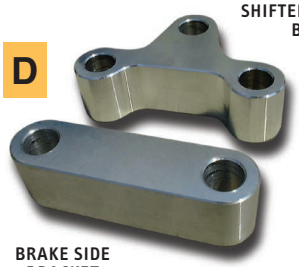

E. EXTENDED SPROCKET SHAFTS & NUTS

Offered for centering the Big Twin 1985 & later motor in wide tire frames, these 1/2" and 1" extended sprocket shafts & nuts are useful when building with the above wide tire frames.

Extended sprocket shaft **nut** for Softail® 1984 thru 1990.

94-384 1" o.s. Length shaft nut.
94-385 1/2" o.s. Length shaft nut.

SOLD EACH

Extended sprocket shaft **nut** for Big Twin 1991 & later.

94-386 1" o.s. Length shaft nut.
94-387 1/2" o.s. Length shaft nut.

SOLD EACH

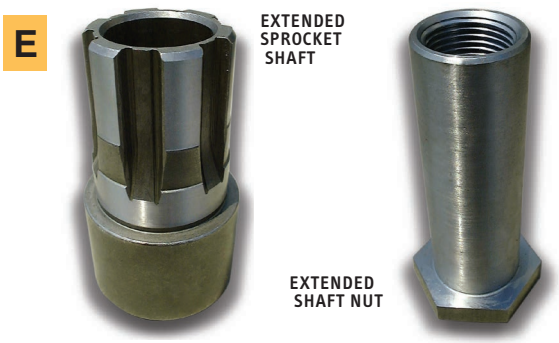

Extended **sprocket shaft** for Softail® 1991 & later, Dyna® 1991 & later, FLT 1985 & later, and FXR 1985 thru 1994. (When using compensator.)

94-382 1" o.s. Length sprocket shaft.
94-383 1/2" o.s. Length sprocket shaft.

SOLD EACH

A



CHROME PLATED

B

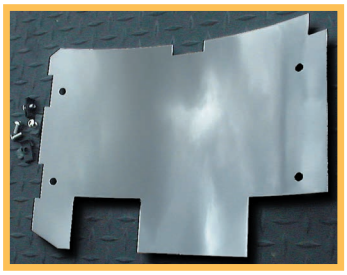

C



5-118

D



E

CHROME PLATED



A. *TRANSMISSION BASE PLATES FOR RIGID FRAMES*

96-806 Transmission base plate with 1.5" offset for rigid frame.
96-807 Transmission base plate with 7/16" offset for rigid frame.

B. *STAINLESS STEEL DEBRIS DEFLECTOR FOR CHROME HORSE® WIDE TIRE SOFTAIL® STYLE FRAME*

Our stainless steel debris deflector for Chrome Horse® wide tire Softail® style frame is polished to a mirror finish and comes with all necessary mounting hardware.

83-61 Chrome Horse® stainless steel debris deflector. SOLD EACH

C. *DEBRIS DEFLECTOR FOR SOFTAIL®*

Black plastic debris deflector fits Softail® style frames.

88-97 Debris deflector. SOLD EACH

D. *CRANK CASE GUARDS FOR BIG TWIN*

Fits Big Twin 1941 & later except FLT. OEM 24490-36.

5-84 Chromed steel. SOLD EACH
5-118 Polished stainless steel. Two times stronger than original.

E. *FRAME INSERTS FOR SOFTAIL®*

Easily installed 4 piece kit of stylish inserts for rear frame sections on Softail® 1986 thru 1991.

89-339 Chrome plated frame inserts. OEM 47300-88T. SOLD AS KIT

SWING ARM PARTS FOR BIG TWIN (EXCEPT FLT)

ALL PARTS SOLD EACH EXCEPT AS NOTED

1	**95-196**	SEAL 1958 THRU 1972 (OEM 47519-58)
	95-235	SEAL 1973 THRU 1983 (OEM 47519-72)
2	**83-7**	CHROME SWING ARM BOLT (OEM 47510-58)
3	**83-8**	CHROME SPACER (OEM 47517-58) SOLD AS PAIR
4	**95-446**	TAPERED BEARING WITH RACE. TIMKEN (OEM 9052)
5	—	
6	**83-10**	CHROME ANCHOR STRAP (OEM 44154-73)
7	**83-9**	LOCKWASHER (OEM 47513-58)
8	**5-63**	CHROME AXLE ADJUSTER.

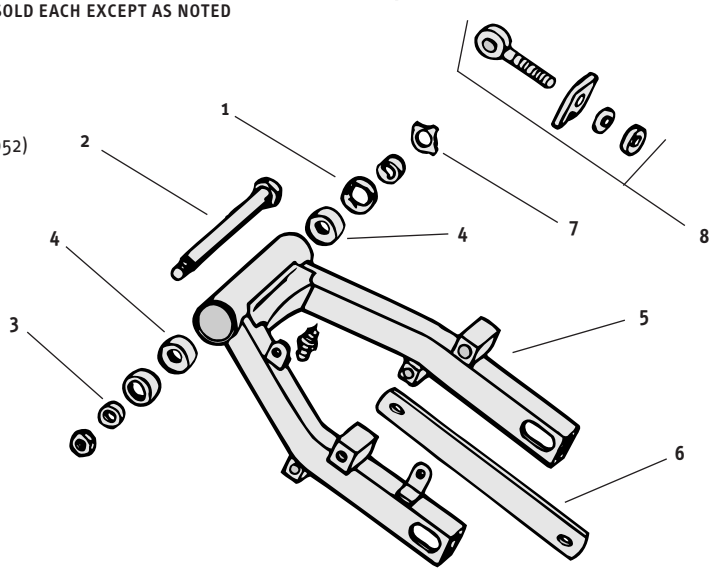

REAR BRAKE CALIPER ANCHOR ARM BOLT KIT



These stock replacement bolts, nuts, washers and cotter pins fit 1973 thru 1983 FL & FX.

83-11 Kit, chrome plated. SOLD AS KIT

A. *FRAME CUSHION FOR SOFTAIL® SWING ARM*

5-197 1/4" - 20 Threaded stud/frame cushion for Softail® 1984 thru 1999 swing arm. OEM 11451.

5-261 Push in cushion, Fits 2000 & up replaces OEM# 11514 — SOLD EACH



B. *SOFTAIL® SWING ARM MOUNTING KIT*

Below items fit all Softail® models 1984 thru 1999. Listed below are all the parts our kit includes:

OEM NO.	PART NO.	DESCRIPTION	
48031-89A	**83-20**	Swing arm tube.	INDIVIDUAL
4961	**83-21**	Tube bolt.	PARTS
7142	**83-22**	Star washer.	SOLD EACH
9076	**83-23**	Bearing w/snap ring.	
11158	**83-24**	Snap ring.	
43283-86	**83-25**	Spacer washer.	

83-26 Kit containing all parts listed above in quantities required to mount swingarm. — SOLD AS KIT



C. *SWING ARM BEARING FOR TWIN CAM®*

83-45 Swing arm bearing, 2000-later, 13/16" ID. — SOLD EACH



D. *PIVOT BOLT COVERS FOR SOFTAIL® SWING ARM*

Covers & protects the exposed swing arm pivot bolts. Installed with socket head set screws.

89-341 Fits all Softail® 1984 thru 1991 (except Fat Boy®). OEM 43897-86. — SOLD AS PAIR



E. *TOOL BOXES & MOUNTING BRACKETS*

Original style weld-on tool box brackets come in 3.0mm raw steel (for added strength), & will mount tool boxes to stock as well as most custom rigid frames.

5-117 Late model, 1953 thru 1957. — SOLD EACH

5-78 Early model, 1937 thru 1952. — SOLD EACH

5-94 Mounting kit. — SOLD AS KIT



F. *AXLE SLIDER KITS*

At last, a sure means of reinforcing and protecting all square section H-D® swing arms and rigid frames from distortion and finish damage by the axle and axle nut. Stainless steel.

83-19 Fits 4 speed Big Twin 1973 thru 1986, Softail® 1984 & later and Sportster® 1988 & later. Clip-in type. — SOLD AS KIT



G. *FRAME MOUNT RIDER PEG BRACKET FOR SPORTSTER®*

23-108 Fits Sportster® 1954 thru 1978 stock swing arm only. — SOLD EACH



H. *NYLON SEAT BRACKET WASHER*

This **U.S.A. MADE** 1/4" nylon washer keeps the seat bracket from scratching the paint on the rear fender.

24-1 Fits 1982 & later FXE, FXSB, FXWG, FXST, XLH, XLS, XLX & XR-1000. OEM 6410. — SOLD EACH



2

A

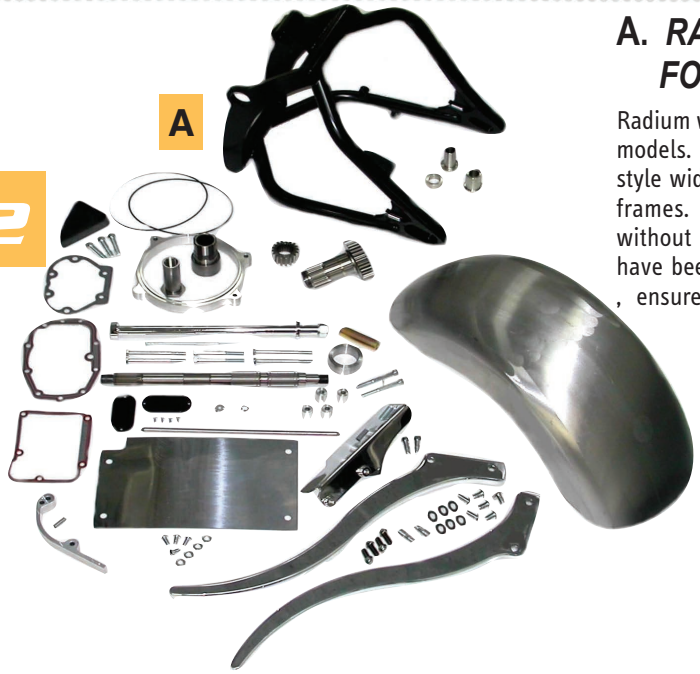

A. *RADIUM WIDE TIRE SWINGARM KIT FOR SOFTAIL®*

Radium wide tire swingarm kit, fits both Evolution and Twin cam® Softail® models. This comprehensive kit designed for a 240 Metzeler or 250 Avon style wide tire application, comes w/instructions to upgrade stock Softail® frames. Will also fit most wide custom frames. Rear fender is supplied without holes to allow custom installations. All parts supplied in this kit have been thoroughly tested and are made from high quaity materials to , ensure proper operation.

83-99 Radium wide tire swingarm kit for 1991-2006 Softails®.

B. *ENGINE GUARDS*

NEW!

B

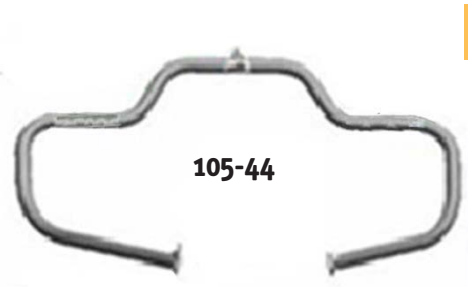







FRONT BARS

105-44 Chrome Engine Guard Touring, '09 & later, OEM 49155-09A
105-45 **Black** Engine Guard Touring, '09 & later, OEM 49155-09A

105-46 Chrome Engine Guard Touring, '97 - '08, (except FLTR) OEM 49155-05B
105-47 **Black** Engine Guard Touring, '97 - '08, (except FLTR) OEM 49155-05B

105-48 Chrome Engine Guard Touring, '09 & later, OEM 49050-09
105-49 **Black** Engine Guard Touring, '09 & later, OEM 49050-09

105-50 Chrome Engine Guard Touring, '97 - '08, OEM 46549-03
105-51 **Black** Engine Guard Touring, '97 - '08, OEM 46549-03

NOTE: These engineguards are for appearance only; they are not meant to protect either the rider, passenger or motorcycle at any time.

A. *ULTIMA® FRONT HIGHWAY BARS*

Made from 1-1/4" dia. steel then beautifully chrome plated. Rubber banded footrest area.

105-43 FLST 1986 thru 1999. SOLD EACH

B. *FRONT & REAR HIGHWAY BARS*

NOTE: These highway bars are for appearance only; they are not meant to protect either the rider, passenger or motorcycle at any time.

FRONT BARS SOLD EACH

105-15 1" Dia. (OEM stock size) Fits FL & FLH, 1958 thru early 1979. OEM 49038-58.

105-1 1-1/4" Dia. Fits FL & FLH, 1958 thru early 1979. OEM 49038-58.

105-2 1-1/4" Dia. Fits FL late 1978-1984 and FLH late 1979-1984. OEM 490340-79.

105-12 1-1/4" Dia. Fits FX 1972-1985. OEM 49016-72C.

105-13 1-1/4" Dia. Fits FLST/C/F/N/S 1986-1999. OEM 49004-90.

NEW!

105-18 **Same as 105-13 in BLACK powdercoat.** 1-1/4" Dia. Fits FLST/C/F/N/S 1986-1999.

105-16 1-1/4" Dia. Fits FXST, FXSTB, FXSTD, FXSTS 2000-later. OEM 49200-07.

105-17 1-1/4" Dia. Fits Sportster® 2004-later. OEM 49060-04.

105-19 1-1/4" Dia. Fits FLSTC/S/F 2000-2004. OEM 49004-00.

105-34 1-1/4" Dia. Fits FXST/B/S/D 2000-2004. OEM 49200-07.

105-35 1-1/4" Dia. Fits FXR 1982-1994 and 1999 & 2000.

105-36 1-1/4" Dia. Fits FXDS, FXDX & FXDWG 1993-2004. OEM 49010-93.

105-37 1-1/4" Dia. Fits Dyna Glide® 1991-2004. OEM 49007-90A.

105-38 1-1/4" Dia. Fits XL 1984-2003. NOTE: Also fits XL 1999-2003 models with forward controls.

REAR BAR RELOCATION KITS

105-41 Fits FLSTS 1997-1999. OEM 90345-90A. SOLD AS KIT

105-42 Fits FLSTS 2000-2001. OEM 90238-00.

C. *NON-HINGED REAR FENDERS FOR FL & HERITAGE SOFTAIL®*

These high quality reproduction stock style fenders with reveal molding have turn signal mounting holes pre-drilled. For Heritage Softail® 1986 & late. Also may be used on FXST models wanting to convert to full one-piece fender.

19-120 One-piece rear fender with all holes for turn signal and fender trim. Replaces OEM 59126-86B. SOLD EACH

19-80 One-piece rear fender with taillight mount.

19-83 Same as above part No. **19-80** only smooth (no taillight mount) for use with custom taillight.

19-79 One-piece rear fender with 1973 and later taillight mount and indent for turn signal OEM 59601-79B. SOLD EACH

D. *STEEL FAT BOB® STYLE REAR FENDERS FOR SWING ARM OR RIGID FRAME*

Fenders with left chain cutaway for Big Twin. 7" At widest point.

19-2 Fender without taillamp mount. SOLD EACH

19-73 Fender with taillamp mount.

Fenders with right chain cutaway for Sportster®. 7" At widest point.

19-20 Fender without taillamp mount. SOLD EACH





A. *300 SERIES, 16 GAUGE FENDERS*

SMOOTH SENTRY has round cut sides and gives approximately 135° wheel coverage. SOLD EACH

19-271 13" Wide smooth Sentry fender.

SMOOTH SABRE has a cropped look. SOLD EACH

19-272 13" Wide smooth Sabre fender.

19-270 13" fender, 16 gauge, 300 tire.

19-273 13' fender blank, 16 gauge, 300 tire.

B. *HIGH-STYLE FRONT FENDER*

Pure custom High-Style! This fender is drawn from 1 piece of metal. Mounting holes must be determined by the builder. Matches our High-Style rear fenders part No. **19-156, 19-160**

19-157 High-Style front fender; measures 6-3/8" wide at fender mount surface. SOLD EACH

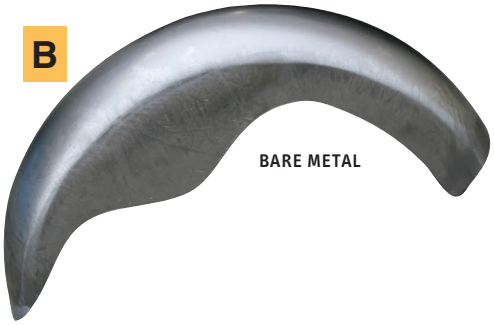

C. *CUSTOM STEEL REAR FENDERS*

These fenders are manufactured in .078" steel; they are a one-piece formed construction for added strength. Unlike the more usual "two halves welded together," these fenders won't flex and split. The steel fenders have been Phosphate etched to help prevent corrosion and to give a good surface for primers to adhere to. They come in either 9", 11" or 13" widths and a choice of several styles. All fenders are supplied raw and undrilled for custom applications.

SMOOTH SILVER HORSE® gives approximately 135° wheel coverage.

19-152 9" Wide smooth Silver Horse® fender. SOLD EACH

19-168 11" Wide smooth Silver Horse® fender.

SMOOTH SENTRY has round cut sides and gives approximately 135° wheel coverage.

19-179 11" Wide smooth Sentry fender. SOLD EACH

19-271 13" Wide smooth Sentry fender.

SMOOTH SABRE has a cropped look.

19-183 11" Wide smooth Sabre fender. SOLD EACH

19-272 13" Wide smooth Sabre fender.

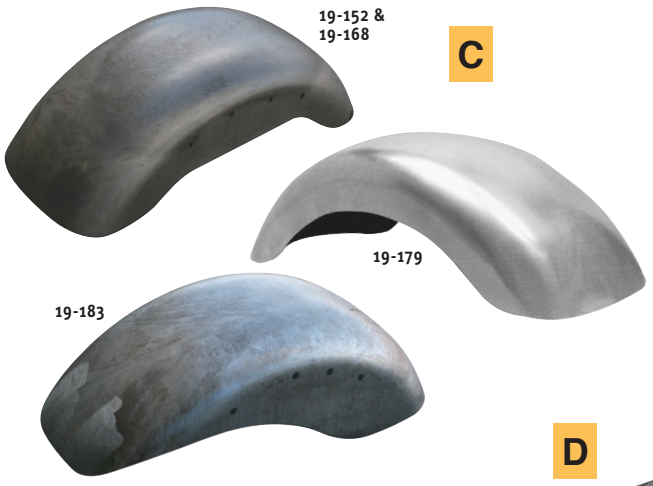

D. *LATE STYLE REAR FENDER FOR SOFTAIL®*

Use on 1997 & later Softail®. Fender features electrical box cutaway. Quality Fat Bob® style replacement.

19-159 Rear fender. Replaces OEM 59753-97. SOLD EACH



A. *HINGED REAR FENDERS FOR H-D® RIGID*

Both of these fenders will mount to 1936 thru 1957 rigid frames and most custom frames. SOLD EACH

19-65 Fits Big Twin rigid frame 1936 thru 1948. OEM 59604-39.
19-84 Fits Big Twin rigid frame 1949 thru 1957. OEM 59604-55.

This reproduction rear fender comes complete with brackets.

19-77 Fits H-D® 45" Solo 1936 thru 1952. OEM 59612-41. SOLD EACH

B. *LATE SPORTSTER® STYLE REAR FENDER*

With stock mounting holes & taillight mounts. Plain metal.

19-57 For Sportster® 1973 thru 1978. OEM 59611-73A.
19-62 For Sportster® 1979 thru 1981. OEM 59679-79A.
19-75 For Sportster® 1982 thru 1993. Replaces OEM 59674-81A.

C. *EARLY SPORTSTER® STYLE REAR FENDER*

Early Sportster® style, 1959 thru 1973. With stock mounting holes in sidewall.

19-22 Stock replacement with taillight cutout. OEM 59611-67A.

D. *FAT BOB®STYLE REAR FENDERS FOR SPORTSTER®*

19-121 Fender only; fits Sportster® 1952 thru 1978. See below for struts for use with this fender.
19-89 Fender only; fits Sportster® 1982 thru 1993. Use stock struts with this fender.

E. *HEAVY DUTY FLAT REAR FENDERS*

Custom design flat fender; no rib to interfere with seat mounting. Heavy gauge rolled metal. Readily mounts to most makes and models.

SOLD EACH

19-123 6" Wide, with bobbed tail. Bare metal.

F. *CUSTOM REAR FENDERS*

Rear fenders w/internal struts for custom Softail® applications.

19-263 9" rear fender.
19-265 11" rear fender.

Rear fenders w/out internal struts for custom applications.

19-262 9" rear fender.

G. *FL STYLE REAR FENDER FOR FXR*

One-piece fender fits 1982 thru 1994 FXR using stock struts. Uses 1973 & later taillamp.

19-118 Fender with taillamp mount.





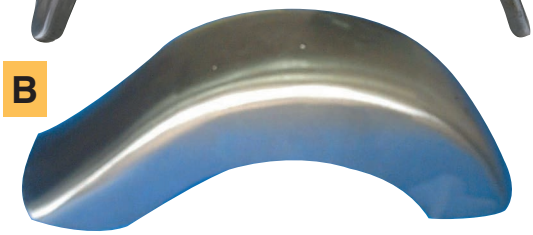











A. *9" WIDE "BOBBED" REAR FENDER*

Another Midwest industry first! Here is the first wide flat fender for rigid frames with some class. Flipped "bobbed" tip really gives this fender a nostalgic style of years gone by that is perfect for our wide rigid frames.

19-148 9" Wide "bobbed" rear fender. SOLD EACH

B. *CUSTOM WIDE REAR FENDERS*

Use on Softail® style wide frames 1986 & later. Provides some "heritage" to wide fender applications. These fenders are undrilled for your mounting position preference.

19-170 9" Wide rear fender. SOLD EACH

C. *HIGH-STYLE REAR FENDERS*

16 Gauge fenders. High-Style at a budget price. Mounting holes must be determined by the builder. Matches our High-Style front fender part No. **19-157**.

19-156 9" High-Style rear fender drawn from one piece of metal. SOLD EACH

D. *REAR FENDER FOR FXR*

19-76 For FXR, FXRS, FXRS-SP & FXLR, 1982 & later. OEM 59634-81A. Will **not** fit FXRT or FXRC. SOLD EACH

E. *REAR FENDER 11.250"*

19-283 11.25" heavy gauge rear fender for custom applications. Undrilled w/wire protection via welded internal tubing. SOLD EACH

F. *WIDE REAR FENDERS FOR SOFTAIL® & RIGID*

These rear fenders are made of heavy duty 14 gauge steel. The 14-1/4" wide fenders are one piece and the 13" have strong tig welding in the center w/reinforcement patches underneath. For left or right side belt/chain clearance, fender can be fit and cut as required. Steel wiring tubes included & plastic wiring clips. SOLD EACH

19-290 13" Wide rear fender for 300mm tire, Softail® frame.
19-291 14-1/4" Wide rear fender for 330mm tire, Softail® frame.
19-292 13" Wide rear fender for 300mm tire, Rigid frame.
19-293 14-1/4" Wide rear fender for 330mm tire, Rigid frame.

A. *H-BOMB RIGID REAR FENDER FOR UNIVERSAL WIDE DRIVE*

A clean look without blowing the budget — the H-Bomb, 16 gauge, one piece drawn metal fender. Includes support brackets. Use on wide frame rigid applications.

19-154 9" Wide H-Bomb rear fender with support brackets. SOLD EACH

B. *FRONT FENDER FOR DUECE®*

This custom narrow fender fits FXSTD 2001 & later with 18", 19" or 21" wheels. Replaces OEM 59876-00.

19-25 Chrome fender and bracket. SOLD EACH
19-26 Bare metal fender with chrome plated bracket.
19-27 Bare metal fender and bracket (no chrome).
19-28 Bare metal fender with bracket welded in place to eliminate rivets for a smooth look. Body putty should be used to blend in welded area.

C. *FRONT FENDERS FOR FXSTS SPRINGER® FRONT END*

SOLD EACH
19-172 Bare metal fender & bracket. Fits FXSTS 1993 & later. Replaces OEM 59176-93.

D. *FRONT FENDER 2006-UP FXDWG WIDE GLIDE*

Custom narrow fenders fit 2006 and up FXDWG Dyna-wide Glide™. Replaces OEM 60141-06. SOLD EACH
19-30 Bare metal fender with chrome bracket.
19-31 Bare metal fender & bracket (no chrome).

E. *CUSTOM FRONT FENDERS*

These custom narrow front fenders fit all narrow FX, FXR, FXD & XL, 1970 thru 1995 (except FXLR & FXRSE). OEM 59031-83 and 58998-83. Can also be adapted to many universal applications. For use with narrow 18", 19" and 21" wheels.

19-53 Bare metal fender with chrome bracket. SOLD EACH
19-136 Bare metal fender and bracket (no chrome). SOLD EACH

F. *CUSTOM WIDE REAR FAT BOB® STYLE FENDERS*

Fat fenders for fat tires — these two piece fenders are welded & blended. Designed for wide frames and wide tire applications. Mounting holes must be determined by the builder. See Sec. 1 for 7-1/2" - 9" wide adjustable taillight/license bracket part No. 11-48

19-145 9" Wide rear fender. SOLD EACH
19-147 8.5" Wide rear fender.













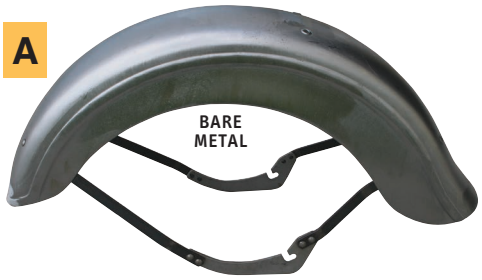

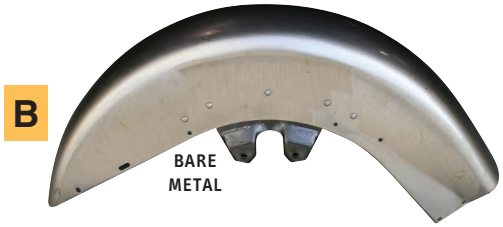









A. *SPRINGER® FORK FRONT FENDER*

19-64 Fender. Replaces OEM 59000-36. SOLD EACH

B. *FRONT FENDER FOR FLT*

Fits 1987 & later FLTC, FLHS, & FLHTC with trim holes. Replaces OEM 59093-87.

19-143 Fender with trim holes. **SOLD EACH**

C. *FRONT FENDERS*

5" wide, front 21" fenders, raw.

19-5 "Outlaw" Raw front 21" fender. **SOLD EACH**
19-6 "Gunfire" Raw front 21" fender.

D. *FRONT FENDER FOR NARROW GLIDE*

Custom steel front fender for Narrow Glide, 19" & 21" or Wide Glide with use of fender spacers. Approx. 5" wide.

19-301 Custom steel front fender. **SOLD EACH**

E. *NARROW FRONT FENDER FOR FXST, FXDWG & FXWG*

Custom narrow fender fits all FXST, FXSTC & Dyna Wide Glide® and FXWG 1980 thru 1985. OEM 59924-80. For use with narrow 18", 19" and 21" wheels.

19-60 Chrome fender & bracket. **SOLD EACH**
19-61 Bare metal fender with chrome bracket.
19-140 Bare metal fender and bracket (**no chrome**).
19-189 Bare metal fender with bracket welded in place to eliminate rivets for a smooth look. Body putty should be used to blend in welded area.

F. *FRONT FENDER FOR FAT BOY®*

19-85 Fits FLSTF 1990 & later. OEM 59139-89. **SOLD EACH**

G. *FRONT FENDERS FOR SPORTSTER® & SUPER GLIDE®*

Styled as original Harley®. Stock replacement.

19-43 Stock style fender for 1970 thru 1984. OEM 59007-73B. **SOLD EACH**



ULTIMA® STEEL FRONT FENDERS

These sleek 2 piece steel constructed heavy duty front fenders come undrilled so you can set the ride height you desire. Designed for use with 21", 23" & 26" x 3.5" wheels. Front Fenders, undrilled

19-305 Raw front 21" fender.
19-306 Raw front 23" fender.
19-307 Raw front 26" fender.



B. FRONT FENDERS FOR WIDE GLIDE®

Custom narrow fender fits Wide Glide® front ends with large lower legs, 1949 thru 1984. For use with narrow 18", 19" and 21" wheels.

19-51 Bare metal fender with chrome bracket.
19-137 Bare metal fender & bracket (**no chrome**).

C. FENDER BLANKS - REAR

19-274 9" blank fender, 16 gauge, 180/200 tire.
19-269 11" blank fender, 16 gauge, 250 tire.
19-273 13" blank fender, 16 gauge, 300 tire.



D. STRUTLESS REAR FENDER

Our Ultima strutless rear fender is designed to fit our Ultima® Softail® style frame eliminating the need for bolt-on struts. Designed with beefy built-in supports, they offer a clean sweeping design that lends itself to the lines of your motorcycle. Both fenders are 7" wide and can accept tire sizes from 130 thru 160. Use with Ultima® Softail® style frame part No. **85-180**. Also works with **85-181**, but requires removal of fender strut supports.

19-165 Chrome Horse® strutless short fender.



E. FENDER SPACERS

Used to space narrow fenders for Wide Glide® front end.

19-246 Spacers. SOLD AS PAIR



F. FENDER 1" LIFT KIT FOR TOURING MODELS

Set of two steel brackets that raise the stock fender 1" when classic high section tires on stock wheels, or a 21"x 3.50" front wheel is fitted in 2014 to present Touring models.

19-90 Chrome fender lift brackets, Touring
19-91 Black fender lift brackets, Touring

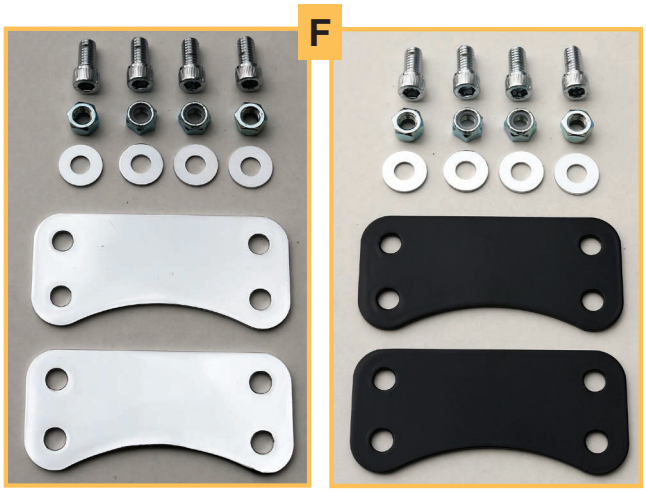



A

B national cycle 89-360



C CHROME PLATED



D BRACKET CHROME PLATED



E CHROME PLATED



8-125



8-126

F



CHROME PLATED

G



8-98

8-97

CHROME PLATED



104-35

H CHROME PLATED

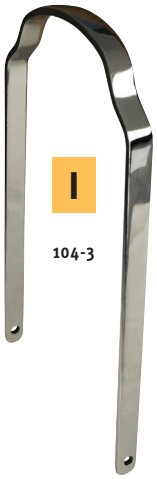

I

104-3

A. *FENDER TRIM*

These **U.S.A. MADE**; beauties are descendants from National Cycle's 1940 originals. Heavy duty casting provides a high quality part with a chrome finish that will last another 50 years. When only the best will do...

89-361 Use on Front FLSTF 1990 thru 1999. SOLD EACH

B. *DIE CAST FENDER TRIM*

Front fender spear sets can be used in conjunction with front fender tips with appropriate relief.

89-360 Replaces OEM 59205-57 and 59206-57. SOLD AS SET

C. *UNIVERSAL FRONT AND REAR FENDER TIPS*

Large fender tip is used on rear FL fenders and many big aftermarket FLH front & rear fenders. Small fender tip is used on Sportster® and FX front fenders.

Plain fender tip. Chrome plated.

89-162 Large fender tip. OEM 59283-85T. SOLD EACH

89-163 Small fender tip. OEM 59281-85T.

D. *REAR FENDER BRACKET FOR SPORTSTER®*

Installs on frame to support lower front of rear fender.

5-99 For Sportster® 1954 thru 1978. OEM 59795-52A. SOLD EACH

E. *BIG TWIN FRONT AND REAR FENDER LIGHTS*

Reproductions of the popular fender trim lights used on Big Twins. These lights will work on all models with the large dresser style fenders. Don't forget part No. **89-360** fender spear set.

8-125 Front trim light with amber lens. OEM 59082-79. SOLD EACH

8-126 Rear trim light with red lens. OEM 59658-79.

F. *FRONT FENDER LIGHT*

Die cast construction. Available with amber lens only. SOLD EACH

8-75 Fender light, 12V, 5/16" dual stud mount. OEM 59140-85T.

NOTE: Not recommended for street use.

G. *1950'S STYLE FENDER LIGHTS*

These chrome plated, die cast, quality replica fender lights include rubber gasket, wire, and 12V bulb.

8-97 Fender light with clear lens. SOLD EACH

8-98 Fender light with amber lens.

H. *REAR FENDER SUPPORT*

Chrome plated or raw fender supports for 9" and 11" fenders.
9" supports is designed for 9" flat fenders while 11" support is designed for 11" radius fenders.

104-35 9" Wide, Wide Drive Rigid frame, chrome. SOLD EACH

I. *REAR FENDER BRACES*

Fender braces to be used when you don't use a sissy bar. Rear fender braces made from 3/16" x 3/4" steel.

104-3 For 5" & 6" flat fenders, chrome. SOLD EACH

A. *REAR FENDER SUPPORT MOUNTING KITS*

Rear fender support mounting kits available in OE, acorn, or cap nut head style.

41-995 Stock OE style. Fits FL & FLH, 1958 thru 1980. SOLD AS KIT
41-996 Stock OE style. Fits Sportster® 1959 thru 1981.

B. *FENDER RACK FOR HERITAGE® & FAT BOY®*

Chrome plated fender rack made from 3/8" steel tubing is perfect for tying up items and protecting paint. Easily installs to stock seat bolt and license plate bracket for quick mounting and removal.

121-6 Fits Big Twin Heritage® & Fat Boy® models, 1986-2005. SOLD EACH

FENDER STRUT SETS

Nice reproductions of H-D® style rear fender struts. Holes for mounting OEM style fenders. Chrome finish.

C. *BIG TWIN* SOLD AS PAIR

104-13 Fits FX 1972 thru 1985 without turn signal holes.
104-28 Fits FX 1972 thru 1985 with turn signal holes. Replaces OEM 59928-73 & 59929-73.
104-14 Fits FL 1958 thru 1984 without turn signal holes.
104-27 Fits FL 1958 thru 1984 with turn signal holes. Replaces OEM 59932-77 & 59933-77.
104-15 Fits FXWG 1980 thru 1985 without turn signal holes.
104-29 Fits FXWG 1980 thru 1985 with turn signal holes. Replaces OEM 59960-80 & 59961-80.
104-24 Fits FXWG 1980 thru 1985. Internal mounts for the clean, custom look. Hardware included.

D. *SOFTAIL®*

1986 THRU 1999 SOLD AS PAIR

104-20 Fits 1986 thru 1999 Softail® models. Internal mounts for the clean, custom look. Bare metal for painting.
104-21 Fits 1986 thru 1999 Softail® models. Internal mounts for the clean, custom look. Chrome plated.
104-23* Fits Softail® FLSTC 1986 thru 1999, FLSTF & FLSTN 1993 & later, with turn signal holes. Replaces OEM 59969-86A & 59964-86A.
104-25* Fits all models Softail® 1986 thru 1999, without turn signal holes.

***NOTE:** Softail® struts part No. **104-23** & **104-25** will bolt up to all years Softail® frames thru 1999. The difference lies in the way or the position the turn signals mount.

E. *REAR FENDER STRUT MOUNT KITS*

41-147 Low profile allen kit for struts with 6 holes. Fits FXST, FXSTC, FXSTS & Bad Boy®, 1986 & later. Replaces OEM 59954-86.

F. *SPORTSTER®*

104-16 Fits XL & XLCH 1952 thru 1978. SOLD AS PAIR
104-22 Fits Sportster® 1982 thru 1989 (cast aluminum).
104-26 Fits Sportster® 1990 thru 1993 (cast aluminum).

G. *2000-UP SOFTAIL® (CHROME)*

104-71 FXST SOLD AS PAIR
104-72 FLST
104-73 FLST-smooth

A



B CHROME PLATED

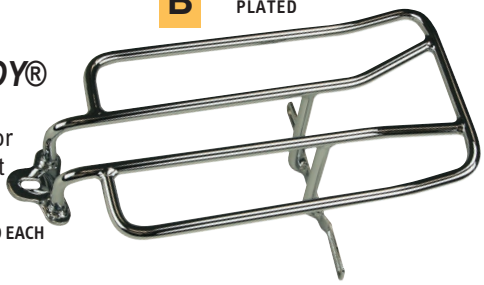

CHROME PLATED

C









D





ALL PARTS CHROME PLATED EXCEPT WHERE NOTED

E CHROME PLATED





F





G



2

A

CHROME PLATED

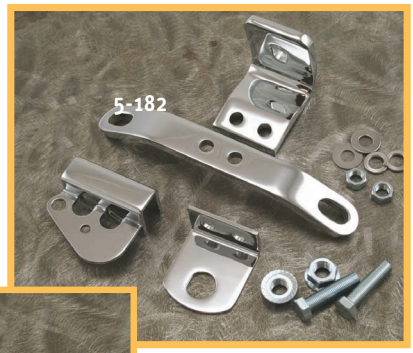



B

CHROME PLATED



CHROME PLATED

C 5-76



5-42

D

CHROME PLATED



E

5-124



F

CHROME PLATED

5-214

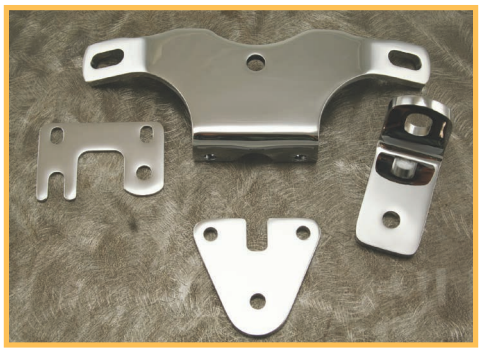

A. *HEAVY DUTY MOTOR MOUNT BRACKETS FOR BIG TWIN*

These motor mounts are designed for heavy duty applications. A must for big inch strokers where breakage is a problem. 5/16" Thick. Fits Big Twin 1948 thru 1984.

5-123 Motor mount only. SOLD EACH
5-182 Motor mount with choke and ignition tab.

B. *MOTOR MOUNTS FOR SOFTAIL®*

Chrome top motor mount is the same style as original on 1984 thru 1989 Softail® models. Can also be used on later models and custom frames. Replaces OEM 16852-83A.

5-156 Top motor mount. SOLD EACH

C. *TOP MOTOR MOUNT FOR PAN & SHOVEL*

5-76 Fits H-D® 74" 1948 & later. Stock replacement. OEM 16853-48. SOLD EACH

D. *TOP MOTOR MOUNT & COIL BRACKET FOR PAN & SHOVEL*

Incorporates a coil mount with the top motor mount. Keeps wiring neater. Finest quality steel. **NOT** for use with Fat Bob® gas tanks. For H-D® 74" 1948 & later. OEM 16853-48.

5-42 Without key switch hole. SOLD EACH

E. *CHROME BILLET MOTOR MOUNT*

Chrome heavy duty billet top motor mount. Fits all EVO engines solidly mounted 86'-99' Softails® or custom frames. Also has provisions for coil mounts and accessories.

5-124 Billet heavy duty motor mount. SOLD EACH

F. *HEAVY DUTY TOP MOTOR MOUNT FOR BIG TWIN*

Chrome heavy duty motor mount comes with horn bracket, choke bracket and chrome hardware.

5-214 Heavy duty top motor mount. Fits Softail® 1984 & later and FXR 1984 & later. SOLD EACH

G. *FRONT MOTOR MOUNT FOR FXR*

5-101 For FLT & FXR, 1980 thru 1994, with Shovel or Evolution® engine. OEM 16207-79B. SOLD EACH

G

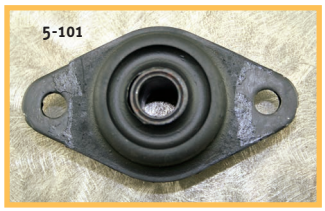

A. *TOP MOTOR MOUNT & COIL BRACKET FOR SPORTSTER®*

For 1957 thru 1978. Incorporates a coil mount with the top motor mount. Makes wiring neater. Finest quality steel.

5-43 Without key hole. SOLD EACH
5-53 With key hole.

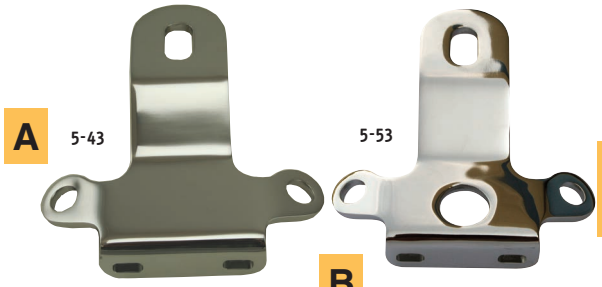

2

B. *TOP MOTOR MOUNT FOR SPORTSTER®*

5-226 Fits XL models 1986-1994. OEM #16278-86A. SOLD AS KIT
5-227 Fits XL models 1995-2003. OEM #16278-95B.

B





C. *TOP MOTOR MOUNT FOR TWIN CAM®*

5-225 Fits Softail® & FLT carb models 2000-2005. SOLD AS KIT

C

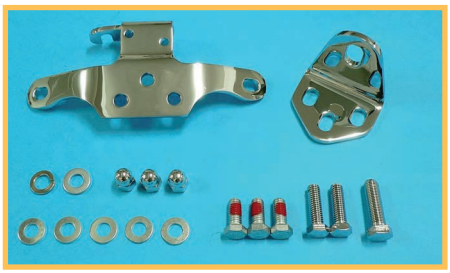

D. *URETHANE MOTOR MOUNTS*

These Urethane motor mounts replace the stock mount in all Big Twins fitted with rubber mounted engines. The special urethane formulated compound has enhanced compression & rebound dampening properties which gives a 20% reduction in transmitted vibration. Available in chrome or black powdercoat finish.

5-198 Black Big Twin urethane motor mount kit.SOLD AS KIT

D

5-198

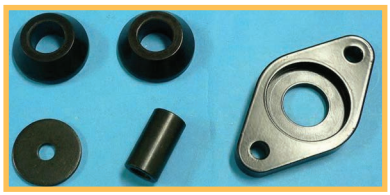

E. *EXTENDED TOP MOTOR MOUNT*

Mount is 1/3 thicker than stock mount for extra strength. The bracket is 1" longer so you can use FXR Type coil mounts for motors with larger cylinders and heads. Kit also includes additional bracket for mounting an ignition switch. Fits '84 and up Softails®.

5-150 Extended heavy duty motor mount and hardware kit.
SOLD AS KIT

E



F. *HEAVY DUTY MOTOR / COIL MOUNT*

This 1/4" thick, chrome steel adjustable mount will bolt-up to Big Twin V2-type motors. Can be used with tall cylinders. Mount is designed to be used with any 1999 & earlier type coil (bolt holes). Provides a convenient spot to locate your coil between the cylinders on the left side of the motorcycle. Ignition switch cover **17-25** is designed to compliment this motor mount (section 1).

5-218 Heavy duty motor/coil mount for V2 type motors. SOLD EACH

F



G. *MOTOR MOUNT STABILIZER*

Fits FXR and FLT, 1984 thru 1994. OEM 16219-79A.

5-193 Chrome steel Imported. SOLD EACH

G

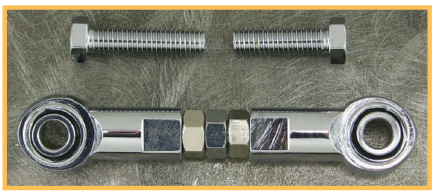

2

A

COLONY CHROME PLATED



B

CHROME PLATED



A. *MOTOR MOUNT HARDWARE KITS*

Complete stock motor mount kit for Harley® O.H.V.'s. Features heat treated bolts, castle nuts, cotter pins, and heavy duty washers.

5-164 Fits Shovel 1970 thru 1984. SOLD AS KIT
41-150 Front motor mount for Dyna® 1991 & later. SOLD AS KIT
41-149 Trans-to-motor mount for TC88® 1999 & later.
41-137 Complete stock motor mount kit for rubber mount FLT, FLHT, FXR, & FXRS, 1985 & later. SOLD AS KIT
5-240 Complete lower motor mount kit for 2000 & later Softail®. SOLD AS KIT

B. *MOTOR MOUNT HARDWARE KIT FOR FXST*

Chrome plated smooth allen head motor mount kit. Includes all hardware for top front and rear mount.

5-185 Fits FXST 1984 & later and FX 1985. SOLD AS KIT
5-186 Fits FXST 1984-later, FX 1985 & for use with Ultima® Rigid frames.

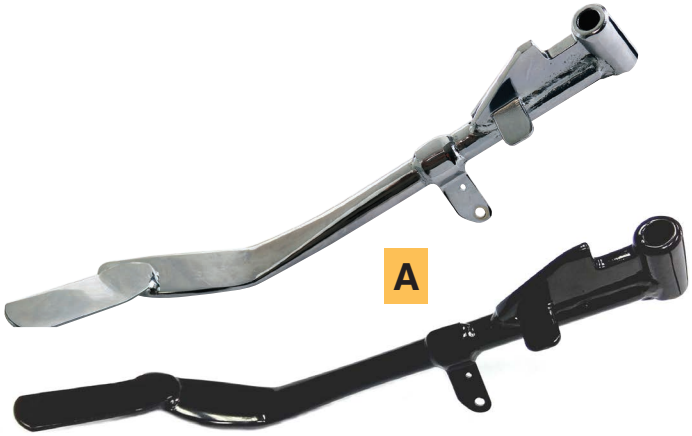

A

A. *XL KICKSTAND*

This high strength steel kickstand has a brilliant chrome finish. Replaces OEM kickstands perfectly. Includes safety switch tab.

87-50 Chrome stock length 8" XL 04-19 kickstand
87-51 Black stock length 8" XL 04-19 kickstand

B. *CUSTOM KICKSTANDS 10" & 11"*

Chrome steel kickstand kit with cover & mounting bolts.

87-10 10" Kickstand kit for '99 & earlier.
87-11 11" Kickstand kit for '99 & earlier.
87-12 11" Kickstand kit for '00 - '06 Softail® models.

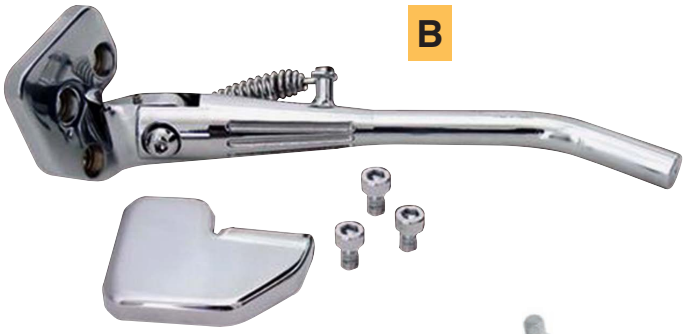

B



NEW!

C

C. *FL STYLE KICKSTANDS*

FL style kickstands are made from high strength steel, the black version is E-coated with primer and finished in a gloss black powder coat for durability. Also available in a beautiful show chrome finish. Kickstand has black bump rubber included. Fits: 1999-2006 FLHT / FLHR / FLHX / FLTR models. Sold each

87-200 Chrome '99-'06 FL kickstand stock length 11" OEM 50075-83/50075-91A
87-201 Chrome '99-'06 FL kickstand 10"
87-202 Chrome '99-'06 FL Kickstand 12"

87-203 Black '99-'06 FL kickstand stock length 11" OEM 50075-83/50075-91A
87-204 Black '99-'06 FL kickstand 10"
87-205 Black '99-'06 FL Kickstand 12"

87-206 Replacement Black bump rubber '99-'06 FL kickstand OEM 50245-99A

A. *CENTER STAND FOR TOURING MODELS*

This stand features a heavy duty steel construction, chrome plated, easy to install & comes with all necessary mounting hardware & black mounting brackets. This stand lifts the bike upright & off the side stand, ideal for cleaning & servicing & reduces parking space.

Attaches directly to frame and does not reduce lean angle. Designed to work with all OE suspension configurations & with profile suspension lowering kits. Adjustable feet can be set to lift rear tire clear off pavement. Replaces OEM# 91573-06. SOLD AS KIT

87-120 Chrome center stand for '99-'08 Touring models.
87-121 Chrome center stand for '09-Later Touring models.

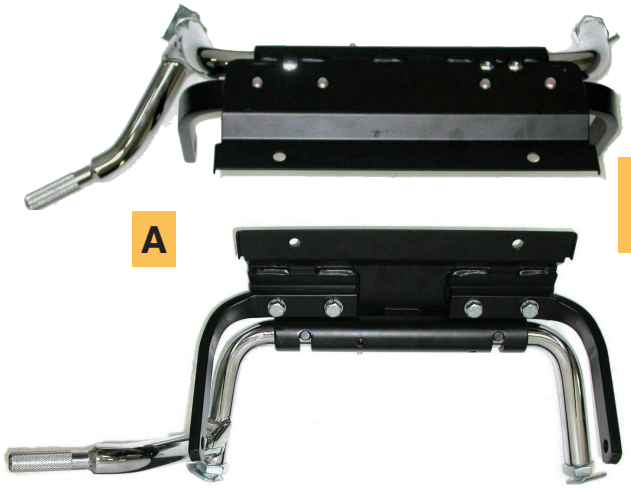

B. *ULTIMA® COMPLETE CHROME PLATED SHOCK ASSEMBLIES*

These shock absorbers have chrome plated springs, adjustment cam covers and eye bolts. Fully adjustable using standard shock tools.

SOLD AS PAIR

116-100 10.5" Eye to eye.
116-101 11" Eye to eye.
116-102 11.75" Eye to eye.
116-103 14" Eye to eye.

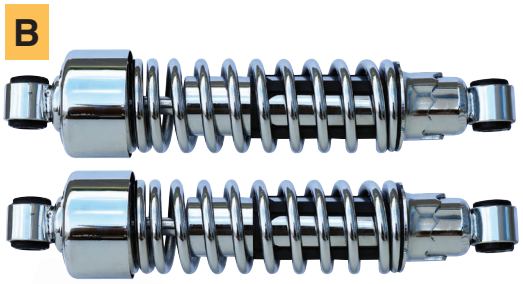

C. *ULTIMA® SOFTAIL® STYLE SHOCKS*

100% of Ultima® shocks are individually checked for performance and quality after assembly. Each shock is dyno tested as well as leak tested at the end of every assembly. Shocks are manufactured by an ISO9001:2000 certified company who has an annual output of 10 million shock/fork products including many for OEM. With Ultima® shocks performance is the priority.

*Instructions included and available online @ www.ultimaproducts.com.

FXST 1984 THRU 1988
116-246 Black adjustable shocks. SOLD AS PAIR
116-228 Chrome plated adjustable shocks.

FXST 1989 THRU 1999
116-229 Black adjustable shocks. SOLD AS PAIR
116-231 Chrome plated adjustable shocks.

FXST 2000 & LATER
116-232 Black adjustable shocks. SOLD AS PAIR
116-233 Chrome plated adjustable shocks.











A



116-258

B



C



5-111



A. *NARROW BODY SHOCKS*
FOR SOFTAIL®

O.D. of this shock is 2" - lowering capability up to 1-3/4".

*Instructions included and available online @ www.ultimaproducts.com.

116-257 Fits Softails® 1984 thru 1999 (adjustable). SOLD AS PR.

116-258 Fits Softails® 2000 & later (1-3/4" lower than stock, non-adjustable).

B. *LOW AIR SHOCKS FOR FL MODELS*

Lower your bagger approx. 1". Chrome plated shocks offered in two Spring Rates Std. @ approx. 158 LBF or Heavy @ approx. 176 LBF. Fits 1997-2008 FL models. Standard Replacement (54631-02B) for factory lowered models like FLHRS or FLHX

116-255 Shocks Chrome Std. 158 LBF, replaces OEM 54631-98.

116-256 Shocks Chrome Heavy Duty 176 LBF, replaces OEM 54631-02B. SOLD AS PAIR

C. *REAR SHOCK STUDS*

Each **U.S.A. MADE** kit includes two studs and four cup washers that are packaged in a poly bag, except for No.'s **5-105**, **5-115**, & **5-116**, which have slightly different parts. See below for details. Lock nuts may be purchased separately.

UPPER SHOCK STUD KITS

5-111 For FL 1958 thru 1966. OEM 54515-58A. SOLD AS KIT

5-102 For FL, FX 1967 thru 1972. OEM 54515-67.

5-104 For FL, FX 1973 thru 1982. OEM 54515-73.

5-106 For XL, 1956 thru 1974. OEM 54515-56B.

LOWER SHOCK STUD KITS

5-115 For Sportster®, XR1000, XLX, 1982 & later. OEM 4081. Hex bolt with chrome nuggets, 2 washers, 2 studs, & 2 lock nuts. SOLD AS KIT

5-116 For FXR, FXRS, 1982 & later. OEM 1614. Hex bolt with chrome nuggets, two washers, two studs, and two lock nuts.

5-112 For FL 1958 thru 1966. OEM 54517-58.

5-103 For FL, FX 1967 thru 1972. OEM 54517-67.

5-105 For FX 1973 & later. Special double threaded stud with a chrome nugget & chrome washer. OEM 3958.

5-107 For XL 1956 thru 1974. OEM 54516-72.

SHOCK STUD LOCK NUTS

5-108 Shock stud lock nut 5/8-18. OEM 7993. SOLD EACH

SHOCK ABSORBERS & PARTS FOR H-D® 1958 & LATER

ALL PARTS SOLD EACH EXCEPT AS NOTED

1 ------ 50'S STYLE SHOCK TOP COVERS FIT ALL MODELS OF SWING ARM H-D® WITH STOCK SHOCKS: SPORTSTER® 1952/1978, SUPER GLIDE® 1971/1982 (EXCEPT FXR), ELECTRA GLIDE® 1958/1964, ALSO 1965/1982 WITHOUT SADDLEBAG GUARDS (OEM 54704-52 & 54705-52) **NOTE:** THESE COVERS ARE STOCK REPLACEMENT FOR XL, K MODEL 1952/1964 & FL 1958/1964. ALL OTHER APPLICATIONS ARE CUSTOM. SOME SEATS MAY CAUSE INTERFERENCE

2 ------ 2-1/2" LONG TOP SHOCK STUD COVER 3/8" HOLE. FL 1970 & LATER, FX 1971/EARLY 1984 AND XL 1965/1974 (OEM 54708-65) SOLD AS PAIR

3 ------ 2" LONG TOP SHOCK STUD COVER XL 1975 / 1978 (OEM 54704-65) SOLD AS PAIR

4 **5-136** SHOCK STUD SPACER BIG TWIN 1967/1984 WHERE NEEDED (OEM 5960W)

5 **116-6** RUBBER SHOCK BUSHING FL & FLH 1958 & LATER, FX 1971 & 1972 AND KH, XL & XLCH 1954/1974 (OEM 85210-42A) SOLD AS PAIR

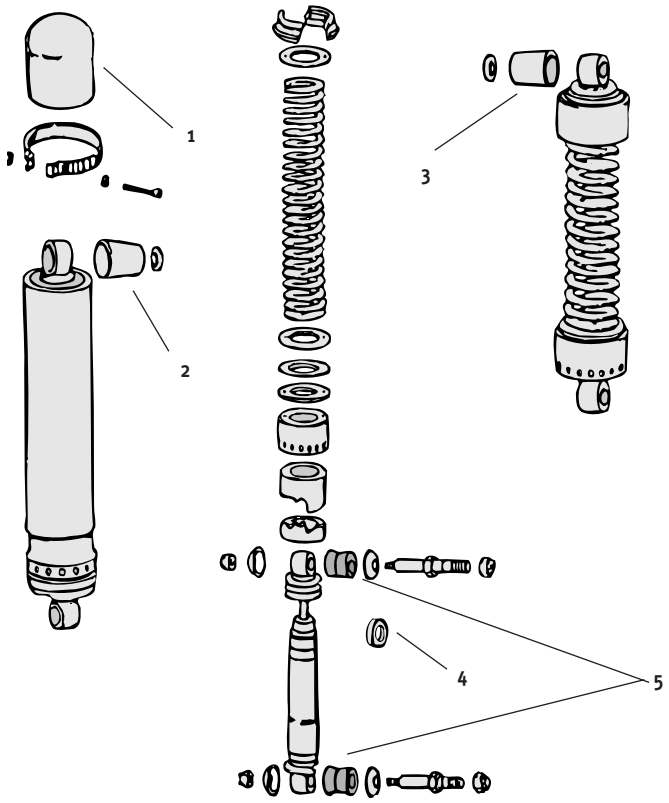

A. *ADJUSTABLE LOWERING KIT FOR TWIN CAM®*

Versatile style enables you to adjust from stock to approximately 2" lower.

5-230 For 2000 & later Softail®. SOLD AS KIT

A



B. *LOWERING KITS FOR SOFTAIL® 1989 THRU 1999*

All kits made from stainless steel. Excellent quality at a great price.

5-140 Fixed lowering; approximately 1" lower. SOLD AS KIT

5-191 Dual action lowering; approximately 0.0" to 2" lower. Can be adjusted after shocks are installed.

5-192 Single action lowering; approximately 0.0" to 2"lower. Adjust to desired height before shocks are installed.

B



A



A. *SOFTAIL® SHOCK BOLTS*

Shock bolts and washers; sold as a kit or individually. Fits all models Softail® 1984 & later. Replaces bolt OEM 4074 and washer OEM 6724.

5-196 Chrome plated kit (as pictured). SOLD AS KIT

B



CHROME PLATED WASHERS & NUTS

U.S.A. MADE

B. *CONVERSION SHOCK STUD KIT FOR SPORTSTER®*

This **U.S.A. MADE** stud kit will update Sportster® 1957 thru 1974 shock mounts to the late model bushing diameters (1/2"). Includes four nickel plated studs, eight chrome plated washers and four nuts; polybagged with instructions.

5-128 Conversion stud kit for Sportster®. SOLD AS KIT

Front Ends Triple Trees Fork Slider, Parts



CUSTOM & STOCK
REPLACEMENT
FRONT ENDS & PARTS



Smooth Triple Trees



Milled Triple Trees



Pointed Style Triple Trees

Bullet Style Lower legs

ULTIMA® 41MM BILLET FRONT END ASSEMBLY

These 41mm front end assemblies feature our Ultima® chrome plated triple trees and complete Softail® style fork sliders with your choice of either smooth or bullet style chrome plated billet lower legs. Each assembly comes with chrome plated stem nut and axle.

Special Features include:

- Chrome plated billet triple trees and lower legs.
- 1984 & Later FXST style tube assemblies.
- Convertible style legs for both single or dual disc 1984 thru 1999 FXST brakes.
- Flush mount style axle and hardware.
- Billet block off plates hiding damper screw holes.

117-35	Front End Assembly with smooth lower legs, stock length, smooth triple tree.	SOLD AS ASSY.
117-37	Front End Assembly with smooth lower legs, +2" length, smooth triple tree.	SOLD AS ASSY.
117-39	Front End Assembly with smooth lower legs, +4" length, 5 deg. smooth triple trees.	SOLD AS ASSY.
117-41	Front End Assembly with bullet lower legs, +4" length, 5 deg. pointed triple trees.	SOLD AS ASSY.
117-42	Front End Assembly with smooth lower legs, +4" length, 5 deg. smooth blind top triple trees.	SOLD AS ASSY.
117-44	Front End Assembly with smooth lower legs, +6" length, 5 deg. smooth blind top triple trees.	SOLD AS ASSY.
117-45	Front End Assembly with bullet lower legs, +6" length, 5 deg. pointed blind top triple trees.	SOLD AS ASSY.
117-46	Front End Assembly with smooth lower legs, +6" length, smooth blind top triple tree.	SOLD AS ASSY.

32-9	Replacement axle for Ultima® billet forks. .950" O.D. on right side. Comes with tapered flathead screw.	SOLD EACH
32-4	Replacement axle for bullet style hidden axle	SOLD EACH

Note: Fork tubes are 1984 and later Softail® style, stock length (24.5").

For additional front end assemblies, please use chrome billet fork slider assemblies and our Ultima® billet triple trees found further in this section.

M8 CHROME FORK SLIDER COVER SET 2018 UP FLFB/FLFBS MODELS.





These new M8 model fork slider covers are formed from Hi-quality steel and come beautifully finished in Chrome

27-57	Chrome fork slider cover set 2018 up FLFB/FLFBS models.	SOLD AS PAIR

ULTIMA® CHROME & BLACK SPRINGER FRONT ENDS

Ultima® wide body springers are offered in chrome or black with modern sleek updated styling. Available -2" & -4" under Standard length, Stock length, +2" & +4" over. Made from high quality steel & includes the ¾" front axle assembly & top tree nut. The reinforced top and bottom trees reduce flex and improve handling. Fits most Big Twin, Sportster® & aftermarket frames 1949 to present w/a 1" diameter neck stem. (Will NOT fit 2004 to present Sportster)

CHROME	BLACK	DESCRIPTION
117-68	**117-80**	-4" Under stock, length
117-67	**117-79**	-2" Under stock length
117-70	**117-76**	**Stock length 23"** (see diagram)
117-72	**117-77**	+2" Over stock length
117-75	**117-78**	+4" Over stock, length

32-11 Replacement axle.



FENDER MOUNT SET FOR SPRINGER

104-17 Fender mount for springer, chrome
104-18 Fender mount for springer, black
SOLD AS PAIR



ULTIMA® 41MM CHROME BILLET FORK SLIDER ASSEMBLIES

Complete Softail® style billet fork sliders Completely assembled. Fork tubes are centerless ground 4140, hard chrome finish with 1984 thru 1999 Softail® style brake application, single or dual disc caliper. Special features include: chrome plated billet lower legs, 1984 & later FXST style tube assemblies and convertible style legs for both single or dual disc brakes. Both Smooth style and Milled feature flush mount style axle & hardware, and billet block off plates hiding damper screw holes. Hidden Axle Bullet Style assemblies include Axle spacers for use with 84/99 Style wheel hubs. All forks can be rebuilt using OEM components.

SMOOTH CHROME	**SMOOTH BLACK**	HIDDEN AXLE
117-246	**117-248**	-4" Under stock length
117-247	**117-249**	-2" Under stock length
117-31	**117-250**	Stock length
117-161	**117-251**	+2" Over stock length
117-162	**117-252**	+4" Over stock length
117-163	**117-253**	+6" Over stock length
117-164	**117-254**	+8" Over stock length
117-165	**117-255**	+10" Over stock length
117-166	**117-256**	+12" Over stock length

32-9 Replacement axle for smooth and milled
32-4 Replacement axle for bullet style hidden axle



black smooth lowers

chrome smooth lowers



41MM CHROME FXST TORPEDO STYLE BILLET FORK ASSEMBLIES

41 mm chrome FXST torpedo style billet fork assemblies. Hidden 3/4" axle.Left side 84-99 caliper bracket included. Stock fork tube caps must be purchased separately for stock triple tree applications.

117-300 Fork Assembly, 41mm, Standard length, Single Disc
117-301 Fork Assembly, 41mm, +2" length, Single Disc
117-302 Fork Assembly, 41mm, +4" length, Single Disc

ULTIMA® 65MM INVERTED FORK ASSEMBLY COMPONENT LIST

All available parts needed to build & service 65mm inverted front ends.

- Designed to use 84'/99' FXST style wheel assemblies with a single disc.
- Triple trees are machined for, but do not include, both internal stop fork cup kit **#5-251** or Standard fork cups **#5-34** used with external fork stops **#27-189**.
- Std Length is OEM FXST length.

Item Number	Description	Part Number	Unit Quantity
1	Damper Rod and Piston Assembly	**95-281**	1
2	Complete Damper Assembly Std. Length	**95-282**	1
	Complete Damper Assembly +2" Std. Length	**95-283**	1
	Complete Damper Assembly +4" Std. Length	**95-287**	1
	Complete Damper Assembly +6" Std. Length	**95-289**	1
	Complete Damper Assembly +8" Std. Length	**95-296**	1
	Complete Damper Assembly +10" Std. Length	**95-304**	1
	Complete Damper Assembly +12" Std. Length	**95-313**	1
3	50mm Inner Fork Tube +2" Std. Length	**95-319**	1
	50mm Inner Fork Tube +4" Std. Length	—	1
	50mm Inner Fork Tube +8" Std. Length	**95-348**	1
4	Bushing Kit, Slider	—	2
5	Spring, Fork	**95-358**	1
6	Guide, Spring	**95-359**	1
7	Spacer, Std. Length	**95-361**	2
	Spacer, +2" Std. Length	**95-362**	2
	Spacer, +4" Std. Length	**95-363**	2
	Spacer, +6" Std. Length	**95-365**	2
	Spacer, +8" Std. Length	**95-366**	2
	Spacer, +10" Std. Length	**95-367**	2
	Spacer, +12" Std. Length	**95-374**	2
8	Washer	**95-377**	2
9	Jam Nut	—	2
10	Axle	—	1
11	Axle Assembly	**32-1**	1
12	Spacer, Axle, Right-Side	**95-386**	1
13	Spacer, Axle, Left-Side	**95-402**	1
14	Axle Nut	**95-404**	1
15	Fastener Kit, Fork Sliders, Includes M8x1.25x30mm and Crush Washer	**95-437**	1
16	Pinch Bolts, Axle 5/16-18 x 1-1/2"	**95-449**	4
17	Lower Fork Unit, Right	**95-456**	1
18	Fork Seal/Bushing Rebuild Kit, includes item # 15,21,40	—	1

Item Number	Description	Part Number	Unit Quantit
19	Fork Tube, Outer Std. Length	**95-550**	1
	Fork Tube, Outer +2" Std. Length	**95-551**	1
	Fork Tube, Outer +4" Std. Length	**95-559**	1
	Fork Tube, Outer +6" Std. Length	**95-563**	1
	Fork Tube, Outer +8" Std. Length	**95-564**	1
	Fork Tube, Outer +10" Std. Length	**95-565**	1
	Fork Tube, Outer +12" Std. Length	**95-566**	1
20	Spacer, Damper Rod Alignment	**95-570**	2y
21	Seal, Top Nut	—	2
22	Top Nut, Fork Tube	—	1
23	Chrome Appearance Cap, Top Nut	—	1
24	Fastener Kit, Pinch Bolts, Fork Tubes 1/4-20 x 3/4" and Washers, for 0 deg, std	**95-576**	8
	Fastener Kit, Pinch Bolts, Fork Tubes 1/4-20 x 3/4" and Washers, for 5 deg, blind	**95-556**	4
25	Nut and Washer, Triple Tree, 5 deg, blind	—	1
26	Caliper/Fender Mount (Right)	—	1
27	Fastener Kit, Caliper Mount, Counter Sunk M6x1x13mm	—	8
28	Shaft, 5˚ Triple Tree, blind	**95-606**	1
29	Fastener Kit, Steering Lock, Counter Sunk 1/4-20x3/4", 0 deg, std	**95-591**	2
30	Steering Lock Bracket, 0 deg, std	**95-595**	1
31	Set Screw, Triple Tree Shaft, 0 deg, std	**95-596**	2
32	Fork Tube and Slider Set (Right), Std Length	**95-656**	1
	Fork Tube and Slider Set (Right), +6" Length	**95-662**	1
	Fork Tube and Slider Set (Right), +8" Length	**95-664**	1
	Fork Tube and Slider Set (Left), +10" Length	—	1
33	Damper Valve Assembly	**95-669**	1
34	Triple Tree Assembly, Std, 0-degree	**117-237**	1
35	Retaining Clip, Fork Seal	—	2
36	O-ring	—	2
37	Dust cover	—	1
38	Fork Seal	—	1
39	Spacer	**95-673**	2
40	O-Ring	**95-872**	2

ULTIMA® 65MM INVERTED FORK ASSEMBLIES



FULLY ASSEMBLED
PHOTO FOR
REFERENCE ONLY



ULTIMA® 58MM INVERTED FORK ASSEMBLIES

Item Number	Description	Part Number	Unit Quantity
1	Complete Damper Assembly +2" Std. Length	—	1
	Complete Damper Assembly +4" Std. Length	**95-201**	1
	Complete Damper Assembly +6" Std. Length	**95-203**	1
	Complete Damper Assembly +8" Std. Length	**95-204**	1
	Complete Damper Assembly +12" Std. Length	**95-208**	1
2	Damper Rod and Piston Assembly	**95-106**	1
3	41mm Inner Fork Tube Std. Length	—	1
	41mm Inner Fork Tube +2" Std. Length	—	1
	41mm Inner Fork Tube +6" Std. Length	**95-214**	1
	41mm Inner Fork Tube +8" Std. Length	**95-224**	1
	41mm Inner Fork Tube +12" Std. Length	**95-231**	1
4	Bushing Kit, Slider, Upper , Lower	—	2
5	Spring, Fork	**95-112**	1
6	Guide, Spring	**95-118**	1
7	Jam Nut	**95-119**	2
8	Fasteners, Axle Clamp	—	4
9	Axle Clamp, Left	—	1
	Axle Clamp, Right	—	1
10	Lower Fork Unit, Right	**95-128**	1
11	Fork Seal Appearance Cover	—	1
12	Fork Rebuild Kit, Bushings and Seals, includes # 15,39,40	—	1
13	Fork Tube, Outer Std. Length	**95-132**	1
	Fork Tube, Outer +2" Std. Length	—	1
	Fork Tube, Outer +10" Std. Length	**95-243**	1
14	Spacer, Damper Rod Alignment	—	2
15	Seal, Top Cap, O-ring	—	2
16	Top Cap, Fork	**95-135**	1
17	Set Screw	—	2
18	Set Screw	—	2
19	Fender Bracket, Right	—	1
	Brake/Fender Bracket, Left	**117-158**	1
20	Bracket Fastener Kit	—	8
21	Axle Shaft	—	1
22	Axle Spacer, Right	—	1
23	Axle Spacer, Left	**95-154**	1
24	Axle Nut	—	1
25	Shaft, 0˚, std Triple Tree/Headset	—	1
26	Triple Tree Assembly, 0 degree	—	1
27	Fork Tube and Slider Set (Right), +2" Length	—	1
	Fork Tube and Slider Set (Right), +4" Length	**95-166**	1
	Fork Tube and Slider Set (Left), +8" Length	**95-175**	1
	Fork Tube and Slider Set (Right), +8" Length	--------	1
	Fork Tube and Slider Set (Left), +10" Length	**95-180**	1
	Fork Tube and Slider Set (Right), +12" Length	**95-189**	1
28	Steering Lock Bracket (Optional)	—	1
29	Fasteners, Steering Lock	**95-257**	2
30	Nut and Washer, Triple Tree, 5 deg, blind	—	1
31	Set Screw, Triple Tree Shaft, 0 deg	**95-192**	2
	Set Screw, Triple Tree Shaft, 5 deg blind	**95-612**	1
32	Fasteners, Pinch Bolts and Washers, Fork Tubes, 0 deg	—	4
33	Damper Valve Assembly	**95-194**	2
34	O-Ring	—	2
35	Retaining Clip, Fork Seal (OEM 45842-77)	—	2
36	Fork Seal	—	2
37	Spacer (OEM 45865-84)	—	2
38	Axle Assembly	—	1
39	O-Ring	—	2
40	O-Ring	—	2
41	Spacer (Used for non-standard lengths) +4"	**95-266**	2
	Spacer (Used for non-standard lengths) +6"	**95-267**	2
	Spacer (Used for non-standard lengths) +8"	**95-268**	2
	Spacer (Used for non-standard lengths) +10"	**95-271**	2

ULTIMA® 58MM INVERTED FORK ASSEMBLIES

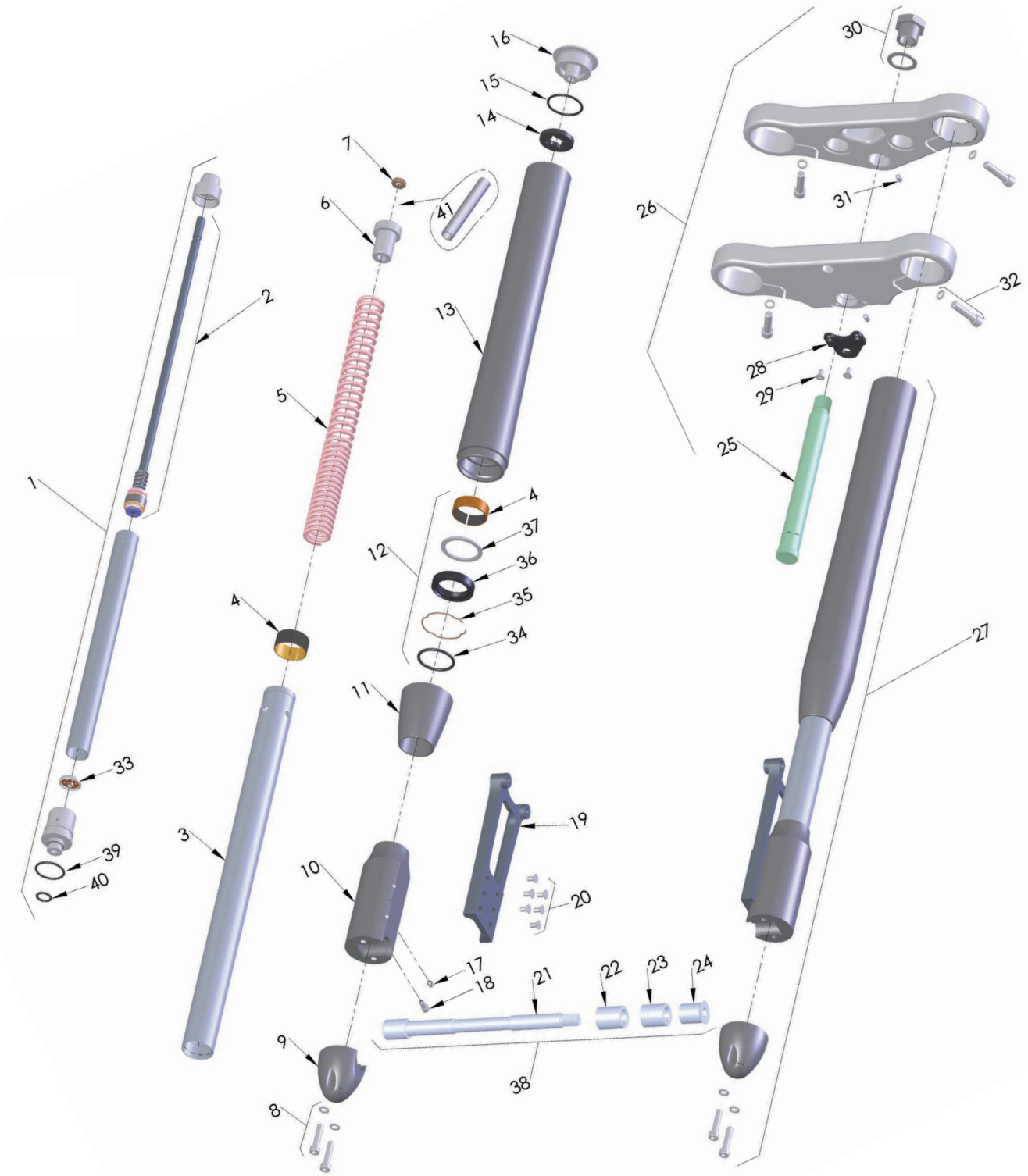

ULTIMA® 39MM CHROME BILLET FORK SLIDER ASSEMBLIES

REPLACEMENT PARTS FOR ULTIMA® 39MM CHROME BILLET FORK SLIDER ASSEMBLIES



27-191

88/99 MODELS

27-191 Caliper Bracket, left side.

39MM BULLET STYLE BILLET AXLES

32-2 Replacement axle for 88/99

32-3 Replacement axle for 2000/2003



32-3



32-2

Item Number	Description	Part Number	Unit Quantity
1	Bushing Kit, Slider, Upper (OEM 45461-87) and Lower (OEM 45465-87)	—	2
2	39mm Inner Fork Tube Std. Length	—	1
	39mm Inner Fork Tube +2" Std. Length	—	1
	39mm Inner Fork Tube +4" Std. Length	—	1
3	Spring, Damper Rebound	—	2
4	Damper Rod with Plunger Rings	—	2
5	Spring, Fork	—	2
6	Top Cap Assembly, Fork (OEM 45996-87)	—	1
7	Fastener Kit, for Lower Axle Clamp	—	4
8	Fender Bracket	—	1
9	Fastener Kit, for Fender Brackets	**27-215**	4
10	Lower Axle Clamp	**27-134**	1
11	Damper Screw and Crush Washer	—	2
12	Screw and Washer	**27-146**	2
13	Fastener Kit, Brake Caliper Bracket (3 screws)	**27-147**	3
14	Brake Caliper Bracket	**27-148**	1
	Dual Disc Bracket	**117-197**	1
15	Lower Fork Tube, Bullet Style, Left	---------	1
	Lower Fork Tube, Bullet Style, Right	---------	1
16	Lower Stop, Fork Leg	**27-115**	1
17	Fork Rebuild Kit, includes # 11,19	—	1
18	Dust Cover	—	1
19	O-Ring	**95-875**	2
20	Seal Spacer	**27-202**	1
21	Fork Seal	—	2
22	Retaining Ring, Fork Seal	**27-203**	2
23	O-Ring	**95-877**	2
24	Spacer (used for non-standard lengths) +2"	—	2
	Spacer (used for non-standard lengths) +4"	**27-205**	2

ULTIMA® 41MM CHROME BILLET FORK SLIDER ASSEMBLIES

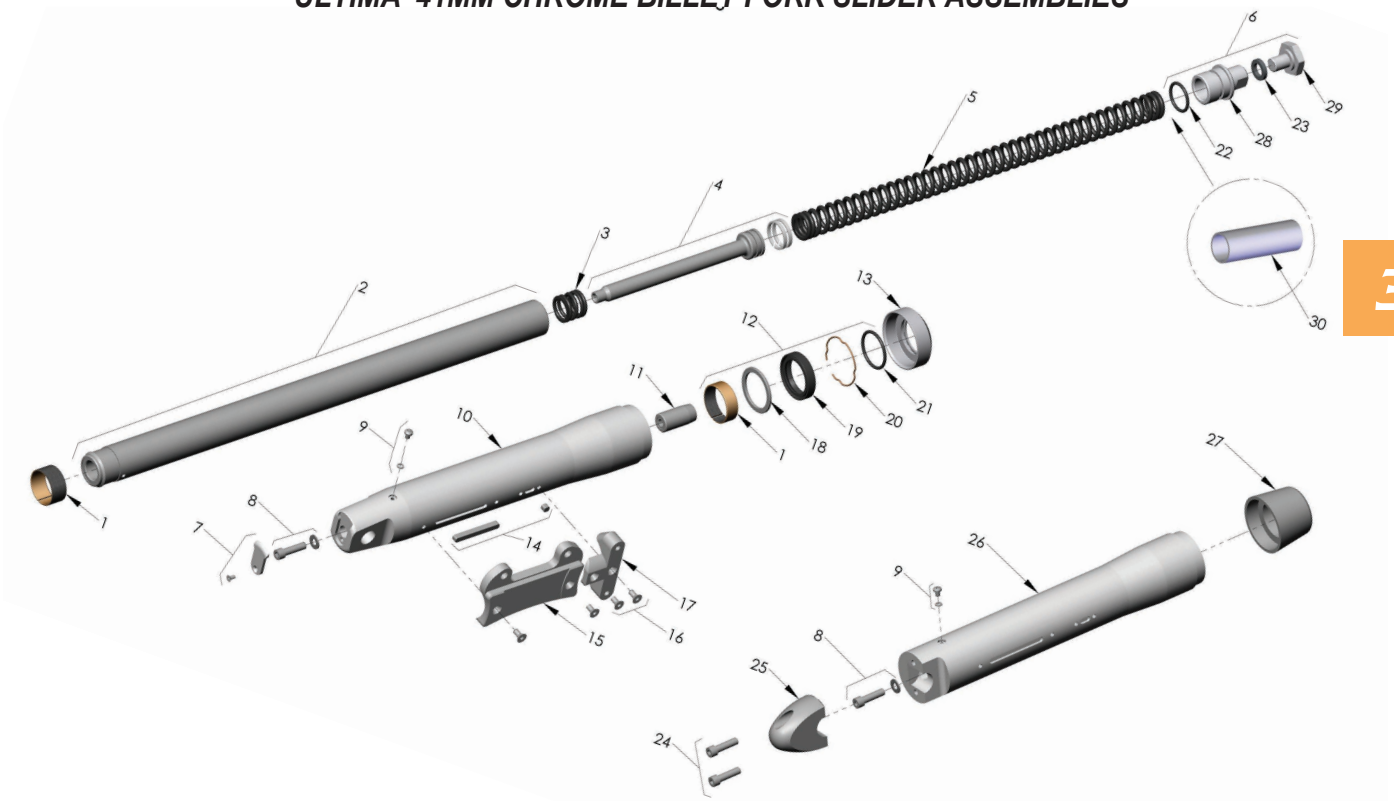

Item Number	Description	Part Number	Unit Quantity
1	Bushing Kit, Sliders, upper (OEM 45940-84), lower (OEM 45866-84)	**27-211**	2
2	41mm Inner Fork Tube Std. Length	**27-207**	1
	41mm Inner Fork Tube +2" Over Std. Length	**27-239**	1
	41mm Inner Fork Tube +4" Over Std. Length	**27-240**	1
	41mm Inner Fork Tube +6" Over Std. Length	**27-241**	1
	41mm Inner Fork Tube +8" Over Std. Length	**27-242**	1
	41mm Inner Fork Tube +10" Over Std. Length	**27-243**	1
	41mm Inner Fork Tube +12" Over Std. Length	**27-244**	1
3	Spring, Damper Rebound (OEM 45855-77)	**27-169**	1
4	Damper Rod with Plunger Rings (OEM 45418-84)	**27-164**	1
5	Spring, Fork (OEM 46048-84)	**27-168**	2
6	Top Cap Assembly, Fork	**27-209**	1
7	Appearance Cover and Fastener	**27-219**	1
8	Damper Screw and Crush Washer	**27-212**	1
9	Screw and Washer	**27-213**	2
10	Lower Fork Tube, Smooth, Left	**27-222**	1
	Lower Fork Tube, Smooth, Right	**27-223**	1
	Lower Fork Tube, Milled, Left	**27-300**	1
	Lower Fork Tube, Milled, Right	**27-301**	1
11	Lower Stop, Fork Leg (OEM 45834-77)	**27-171**	1
12	Fork Rebuild Kit, includes # 8,22,23	**27-224**	1
13	Dust Cover	**27-225**	1

Item Number	Description	Part Number	Unit Quantity
14	Key Kit, for Fender & Caliper Brackets	**27-226**	2
15	Brake Caliper Bracket	**27-227**	1
16	Fastener Kit, for Fender and Caliper Brackets	**27-228**	8
17	Fender Bracket	**27-229**	1
18	Seal Spacer (OEM 45865-84)	**27-170**	1
19	Fork Seal (OEM 45875-84)	**95-399**	1
20	Retaining Ring, Fork Seal (OEM 45842-77)	**27-109**	1
21	O-Ring	**95-873**	2
22	O-Ring	**95-874**	2
23	Seal, oil (OEM 45733-48)	**27-218**	1
24	Fastener Kit, for Lower Axle Clamp	**27-230**	4
25	Lower Axle Clamp	**27-231**	1
26	Lower Fork Tube, Bullet Style, Left	**27-232**	1
	Lower Fork Tube, Bullet Style, Right	**27-233**	1
27	Dust Cover, Bullet Style	**27-234**	1
28	Fork Tube Screw Plug (OEM 45838-77)	**27-167**	1
29	Fork Tube Cap (OEM 45419-80)	**27-67**	1
30	Spacer (Used for non-standard lengths) +2"	**27-245**	2
	Spacer (Used for non-standard lengths) +4"	**27-246**	2
	Spacer (Used for non-standard lengths) +6"	**27-247**	2
	Spacer (Used for non-standard lengths) +8"	**27-248**	2
	Spacer (Used for non-standard lengths) +10"	**27-249**	2
	Spacer (Used for non-standard lengths) +12"	**27-250**	2

RELACEMENT PARTS FOR FRONT FORK ASSEMBLY FOR FXST 1984 thru 1999


27-168


27-163


27-162


27-67


27-167


27-70


27-166

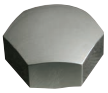
41-127


27-108


95-399

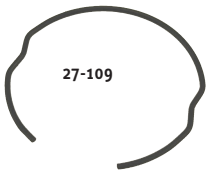
27-109

REPLACEMENT PARTS — SEE PAGE 3-13 FOR FORK TUBES

27-162	Contoured stem nut. OEM 45716-71.	SOLD EACH
27-163	Contoured fork tube bolt. OEM 45839-77.	SOLD EACH
27-67	Top cap. OEM 45419-80.	SOLD EACH
27-70	Seal, oil. OEM 45733-48.	SOLD EACH
27-218	Seal, oil. OEM 45733-48 (import).	SOLD EACH
27-166	Spacer washer. OEM 5710.	SOLD EACH
27-167	Fork tube plug. OEM 45838-77.	SOLD EACH
27-168	Springs. OEM 46048-84.	SOLD AS PAIR
27-164	Damper tube, with screw & washer. OEM 45418-84.	SOLD EACH
27-169	Small spring. OEM 45855-77.	SOLD EACH
27-108	Fork boot. OEM 45420-80.	SOLD AS PAIR
27-109	Oil seal retaining clip. OEM 45842-77.	SOLD EACH
95-399	Oil seal. OEM 45875-84.	SOLD EACH
27-170	Seal spacer. OEM 45865-84.	SOLD EACH
27-171	Lower stop. OEM 45834-77.	SOLD EACH
27-172	Sliders, lower legs. Polished. OEM 45873/4-91.	SOLD AS PAIR
27-185	Sliders, lower legs. Chrome. OEM 45305-98.	SOLD AS PAIR
27-130	Axle cap. OEM 45832-77A.	SOLD EACH
27-173	Studs with nuts & washers. OEM 45998-73.	SOLD AS KIT
27-158	Bushing, upper; fits in lower legs. OEM 45940-84.	SOLD AS PAIR
27-159	Bushing, lower; fits in fork tube. OEM 45866-84.	SOLD AS PAIR
41-127	Cap nut; 1-24 thread for 1948 & later.	SOLD EACH

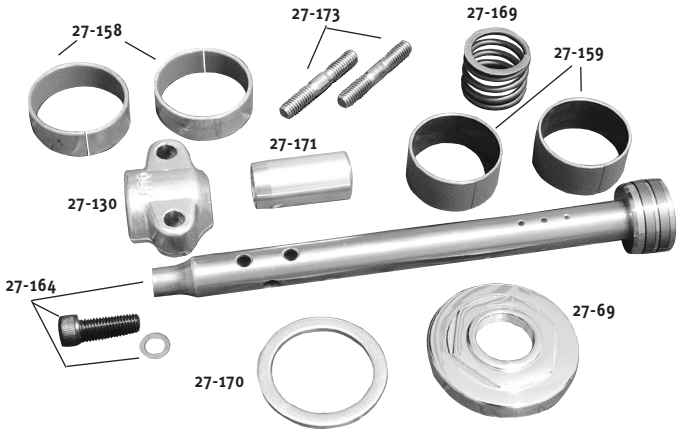

SEE PAGE 3-11 FOR FORK TUBES

PARTS NOT SHOWN TO SCALE

A. *HARD CHROME 41MM FORK TUBES & FORK TUBE ASSEMBLIES*

A



3

1984 & LATER MODELS

1984 & Later 41mm fork tubes are all the same with the exception of total length. The maximum difference of any of the below listed fork tubes is 5/8". This difference will not matter when replacing fork tubes. In order to help ease the stocking of multiple fork length tubes, look at the chart, find your bike and then determine what fork tube you need for your particular application. If you require the exact length for your bike, please see our show chrome fork tube chart on page 3-4 which are cut to exact lengths.

COMPARISON CHART

MODEL	YEAR	STOCK LENGTH
FLT	1984 / 1996	20-7/8"
FLT	1997 & Later	20-1/4"
FLSTC/N/F	1986 / 1999	22-7/8"
FLSTC/N/F	2000 & Later	22-1/4"
FXWG, FXST/C, FXDWG	1984 / 1999	24-1/2"
FXST/C, FXDWG	2000 & Later	24-1/4"

NOTE 1: Special Edition models may vary from this chart. In those cases, measure your fork tube.
NOTE 2: Some FLT models 2002 & later use cartridge damper on the left side. These fork tube assemblies below **WON'T WORK**.

HARD CHROME - SEAMLESS TUBING -CENTERLESS GROUND **SOLD AS PAIR**

FORK TUBES	LENGTH	FORK TUBE ASSY.*
38-317	20-1/2"	**38-319**
38-318	22-1/2"	**38-320**
38-325	24-1/2"	**38-322**
38-326	26-1/2"	**38-334**
38-327	28-1/2"	**38-335**
38-328	30-1/2"	**38-336**
38-329	32-1/2"	**38-337**
38-330	34-1/2"	**38-338**
38-331	36-1/2"	**38-339**
38-332	38-1/2"	**38-340**
38-333	40-1/2"	**38-341**

*All tube assemblies use FXST dampers.

B. *FORK TUBE SLIDER BUSHINGS*

B



1949 THRU EARLY 1977 WIDE GLIDE® 41MM

27-95	Upper bushing. OEM 45824-49.	SOLD EACH
27-96	Lower bushing. OEM 45823-49.	

1984 & LATER WIDE GLIDE® 41MM

27-158	Upper bushing. OEM 45940-84.	SOLD EACH
27-159	Lower bushing. OEM 45866-84.	

1988 & LATER NARROW GLIDE® 39MM

27-160	Upper bushing. OEM 45461-87.	SOLD EACH
27-161	Lower bushing. OEM 45465-87.	

FRONT END PARTS FOR SPORTSTER® - SUPERGLIDE® 1971 & LATER

ALL PARTS SOLD EACH EXCEPT AS NOTED

SPORTSTER® 1971/1978

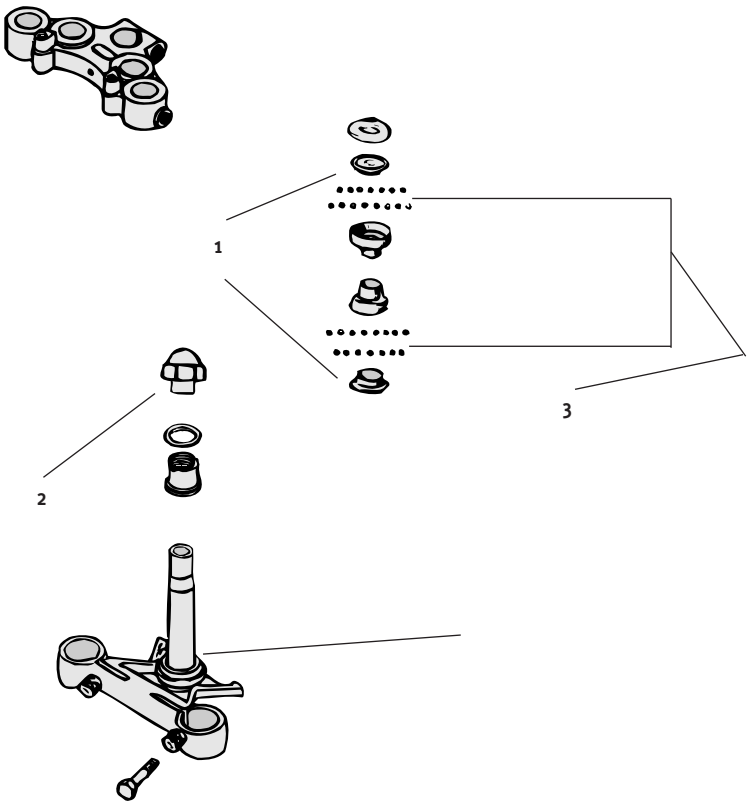

LATE SPORTSTER® & SUPER GLIDE® ALL YEARS

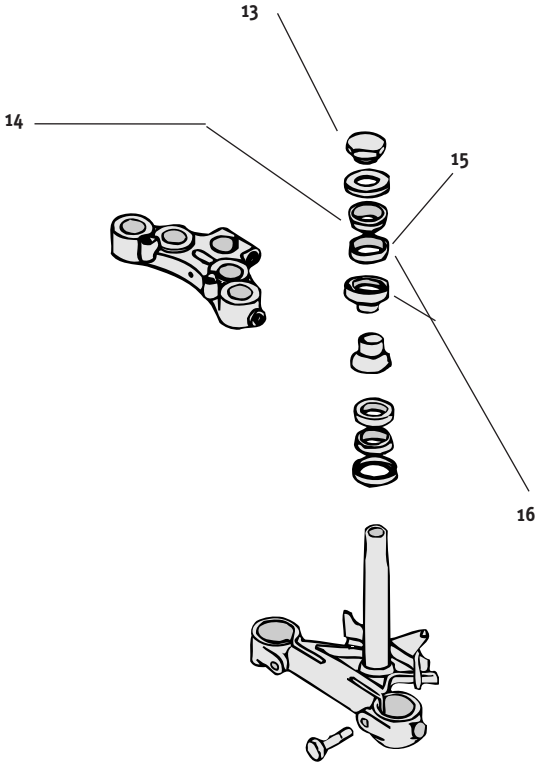

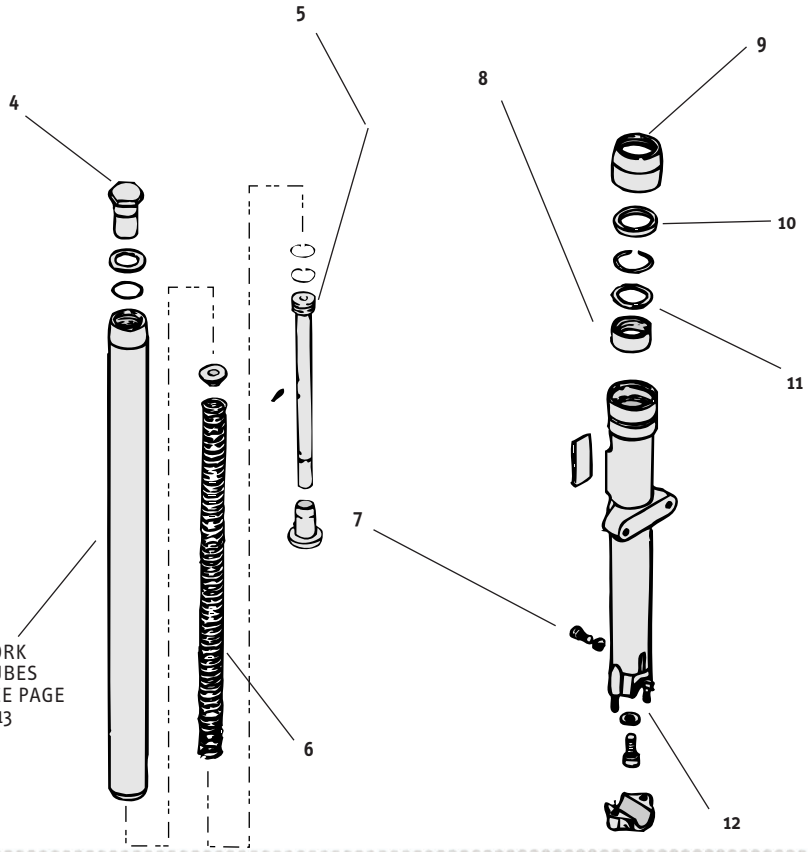

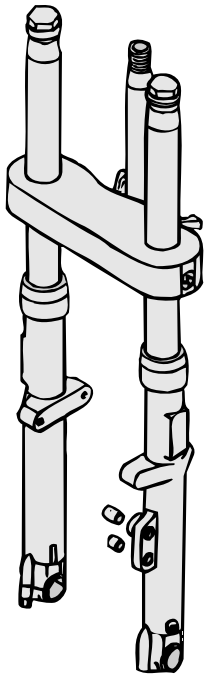

FRONT END PARTS FOR SPORTSTER® - SUPERGLIDE® 1971 & LATER

ALL PARTS SOLD EACH EXCEPT AS NOTED

1	—	TOP & BOTTOM CUP RACE 1977 & EARLIER. SOLD AS SET
2	—	STEM BOLT XLH & XLCH 1973 / 1987 **U.S.A. MADE** (OEM 45722-54)
3	**95-107**	5/16"HEAD RACE BALL (OEM 8860) USE 28
4	**27-63**	FORK TUBE CAP BOLT 1973 & 1974 KAYABA AND 1975 / MID 1985 SHOWA (OEM 45993-73)
5	—	FORK DAMPER ASSY. FX 1976 / 1979, XL 1975 / 1979 (OEM 45409-75)
6	**27-88**	FORK SPRINGS SPORTSTER® & SUPER GLIDE® NARROW / SHOWA 1975 / 1984 **U.S.A. MADE** (OEM 45408-75) SOLD AS PAIR
7	**41-144**	FORK DRAIN PLUG, CHROME BUTTON HEAD ALLEN SCREWS & COPPER WASHERS . XL, FX & FXR, 1973 & LATER (OEM 45790-80 & 45996-73) SOLD AS KIT
8	**95-206**	OIL SEAL XLH, XLCH 1973 & 1974, SPORTSTER® & FX 1973 / 1976 KAYABA (OEM 45297-73)
9	**27-60**	FORK BOOTS SPORTSTER® & SUPER GLIDE® 1973 & 1974 KAYABA
	27-61	FORK BOOTS SPORTSTER® & SUPER GLIDE® 1975 & LATER SHOWA
	27-76	FORK BOOTS SPORTSTER® & SUPER GLIDE® 1971 & 1972. SOLD AS PAIR
10	**95-113**	SEAL XLH, XLCH & FX 1971 & 1972 (OEM 45975-71)
11	**95-205**	OIL SEAL SPORTSTER®, FX & FXR, 1975/1983 (OEM 45400-75) USE TWO
12	—	FORK SLIDER BOTTOM CAP STUD & NUT KIT FOR SHOWA & KAYABA. CHROME. COLONY. SOLD AS KIT
13	**27-62**	STEM NUT. COLONY (OEM 45716-71)
	27-162	CONTOURED STEM NUT XL & FX WITH NARROW GLIDE® FORKS. REPLACES OEM 45716-71
14	**95-445**	TAPERED BEARING SPORTSTER® 1981 & EARLIER. TIMKEN
15	**95-444**	TIMKEN RACE ONLY FOR SUPER GLIDE® ALL YEARS AND LATE SPORTSTER® (OEM 48315-60)
16	**5-34**	HEAD CUP WITH RACES. CHROME (OEM 48311-60)

DAMPER ASSEMBLIES



27-118



27-119



27-164

SOLD EACH

27-118 For FXWG 1980 thru 1983. OEM 45418-80.

27-119 For FL 4 speed late 1977 thru 1984. OEM 45831-77.

27-164 For FXST/C, Dyna Wide Glide® and FXWG 4 speed 1984 thru 1999. OEM 45418-84.

27-165 For Heritage® Softail® and Fat Boy® late 1986 thru 1999. OEM 45932-86.

FRONT END PARTS FOR WIDE GLIDE® FL, FLH & FXWG

ALL PARTS SOLD EACH EXCEPT AS NOTED

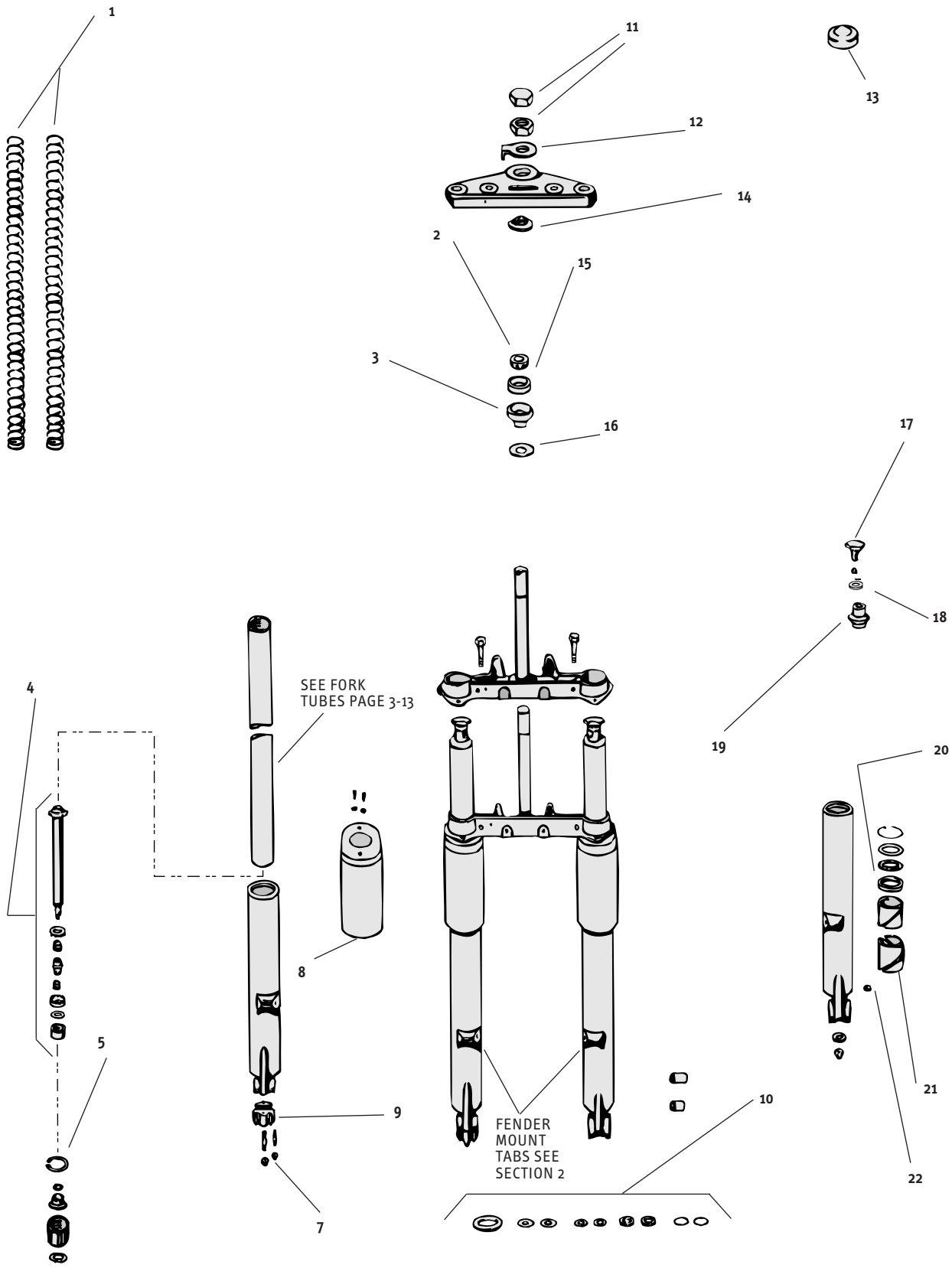

FRONT END PARTS FOR WIDE GLIDE® FL, FLH & FXWG

ALL PARTS SOLD EACH EXCEPT AS NOTED

1	—	FORK SPRINGS WIDE GLIDE® H-D® 74" 1949 / 1977-1/2 **U.S.A. MADE** (OEM 46051-49A) SOLD AS PAIR
	27-88	FORK SPRINGS SPORTSTER® & SUPER GLIDE® NARROW / SHOWA 1975 / 1984 **U.S.A. MADE** (OEM 45408-75) SOLD AS PAIR
2	**95-311**	HEAD CUP BEARING WITH SEAL 1949 & LATER (OEM 48300-60)
	95-443	TIMKEN BEARING ONLY
3	**5-34**	HEAD CUP WITH RACES. CHROME (OEM 48311-60)
4	**27-68**	DAMPER KIT FOR FL & FLH, 1949 / EARLY 1977 (OEM 46100-48 &B 46161-49) SOLD AS KIT FOR ONE LEG ONLY
5	**27-107**	SNAP RING 1949 / EARLY 1977 **U.S.A. MADE** (OEM 46172-48)
7	**27-101**	FORK SLIDER BOTTOM CAP STUD & NUT KIT FLH 1949 / 1977. COLONY. SOLD AS KIT
8	**27-71**	STOCK FORK TUBE COVERS WIDE GLIDE® 1949 & LATER. CHROME (OEM 45964-49) SOLD AS PAIR
	27-72	2" O.S. FORK TUBE COVERS WIDE GLIDE® 1949 & LATER. CHROME. SOLD AS PAIR
	27-73	4" O.S. FORK TUBE COVERS WIDE GLIDE® 1949 & LATER. CHROME. SOLD AS PAIR
9	**27-130**	BOTTOM CAP FL & FLH LATE 1977 & LATER, FXWG 1980 / 1984, FXST & FLST 1984 & LATER. ZINC PLATED (OEM 45832-77A)
10	**95-177**	GASKET & SEAL KIT FOR H-D® 74" 1948 / 1977-1/2 (OEM 45849-49)
	95-360	GASKET & SEAL KIT FOR H-D® 74" & 80" 1977 / 1999 (OEM 45849-77)
11	**41-127**	CAP NUT / STEM NUT 1948 & LATER 1" X 24 THREAD
	27-110	STANDARD STEM NUT 1948 & LATER 1" X 24 THREAD (OEM 45718-60)
12	**27-106**	LOCKWASHER 1960 / EARLY 1977 (OEM 45717-63)
13	**41-904**	STEM NUT COVER FXWG 1980 & LATER (OEM 45670-80)
14	**27-69**	CONE SEAL NUT W/DUST GUARD EL, FL, FLH, 45" SERVICAR, W/WIDE GLIDE® FORK 1949 & LATER. 1" X 24 THREAD (OEM 48330-48A
15	**95-444**	TIMKEN RACE FOR HEAD CUP (OEM 48315-60)
16	**27-97**	UPPER & LOWER FORK CUP DUST SHIELDS (OEM 48365-48A & 48361-80) SOLD AS PAIR
17	**27-65**	FORK TUBE PLUG WIDE GLIDE® 1948 / EARLY 1977. CHROME (OEM 45754-60)
	27-67	FORK TUBE PLUG H-D® 74" 1977-1/2 & LATER. NON-VENTED (OEM 45419-80)
	27-163	CONTOURED FORK TUBE PLUG. NON-VENTED (OEM 45839-77)
18	**41-103**	FORK TUBE BOLT WASHER. CHROME (OEM 5710) SOLD AS SET
19	**27-53**	WIDE GLIDE® FORK TUBE PLUG HOLDER 1948 / EARLY 1977. CHROME (OEM 45776-49)
	27-54	WIDE GLIDE® FORK TUBE PLUG HOLDER LATE 1977 & LATER. COLONY (OEM 45838-77)
20	**95-111**	FORK SEAL H-D® 74" 1949 / 1977-1/2 (OEM 45852-48)
	95-326	FORK SEAL WIDE GLIDE® 1977 & LATER (OEM 45843-77)
21	**27-95**	UPPER FORK TUBE BUSHING WIDE GLIDE® 1948 / EARLY 1977 (OEM 45852-48)
22	**41-145**	STOCK STYLE PLUG FL 1949 / EARLY 1977. CHROME (OEM 45830-48) SOLD AS KIT

FORK TUBE BOLT & WASHERS

CHROME PLATED

PART NO.	REPLACES OEM NO.	DESCRIPTION	APPLICATION	
27-63	45993-73	Standard cap	Super Glide® & Sportster® 1973 thru mid 1985.	
27-162	445716-71	Contoured stem nut	XL & FX	
27-163	45839-77	Contoured fork tube bolt	Wide Glide® 1977 & later	
27-53	45776-49	Standard plug	Wide Glide® 1948 thru 1977.	
27-54	45838-77	Standard plug	Wide Glide® 1978 & later.	
27-65	45754-60	Stock/flat top bolt	Wide Glide® 1948 thru 1977.	
27-77	45419-80 & 5710	Stock/flat top bolt & washer	FL, FXWG & Softail®, 1978 & later.	SOLD AS SET
41-103	5710	Fork tube bolt washer	FL, FXWG & Softail® 1978 & later.	SOLD AS PR



27-63



27-162



27-163

ALL PARTS SOLD EACH EXCEPT AS NOTED



27-53 & 27-54



27-65, 27-77



41-103

3

FRONT END PARTS FOR SPORTSTER® 1970 & EARLIER

ALL PARTS SOLD EACH EXCEPT AS NOTED

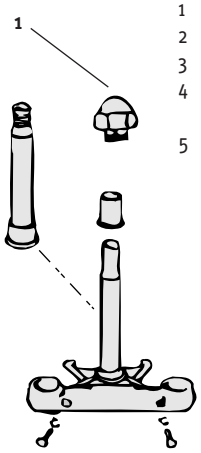

1	—	STEM BOLT KH, XL, XLH & XLCH 1954 / 1970. COLONY (OEM 45722-54)
2	**95-107**	5/16"HEAD RACE BALL (OEM 8860) USE 28
3	—	TOP & BOTTOM CUP RACE 1977 & EARLIER. SOLD AS SET
4	—	FORK TUBE CAP BOLT KH, XL, XLH, XLCH 1959 / 1970 (OEM 45756-69)
5	**27-76**	FORK BOOTS SPORTSTER® & SUPER GLIDE® 1971 & 1972. SOLD AS PAIR

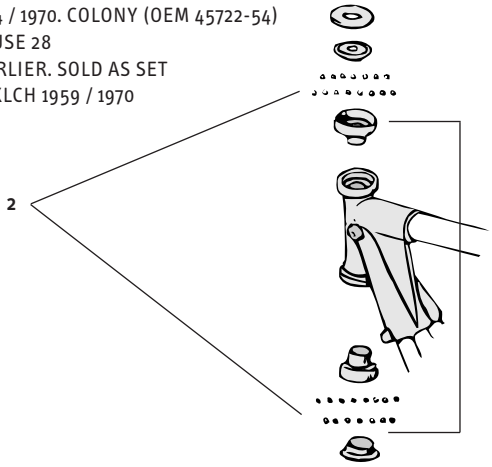

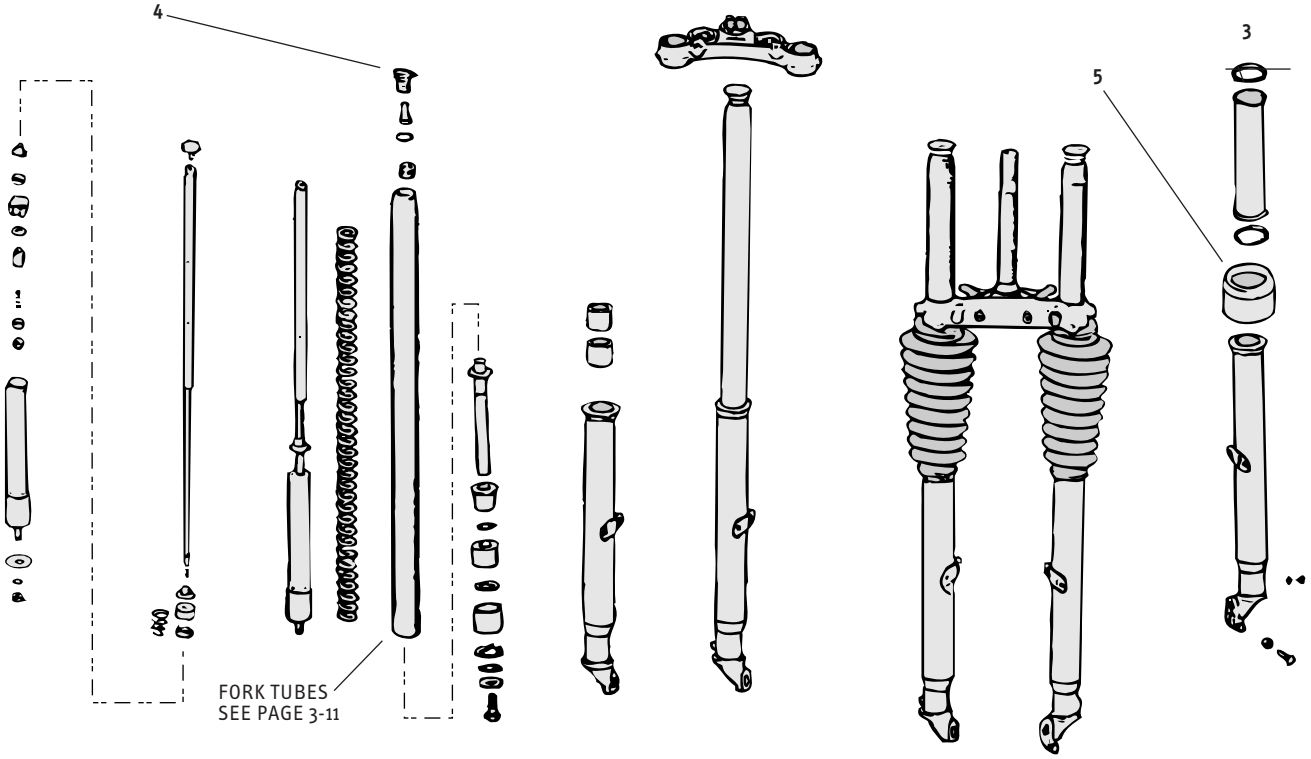

REPLACEMENT PARTS FOR DUECE™ TRIPLE TREES

WILL FIT MOST H-D® FRAMES & CUSTOMS

Fits 1936 & later H-D® frames and customs. Replaces 2000 & later Duece™ trees. **NOTE:** This triple tree can be used with any year 41mm fork tube assembly.

ORDER SEPARATELY

27-97	Top & bottom dust shields. OEM 48361-80 & 48365-48. SOLD AS SET	
27-106	Lock for stem nut. OEM 45717-63.	SOLD EACH
27-110	Stem nut. OEM 45718-60.	SOLD EACH
27-186	Stem nut seat, upper head cup. OEM 48324-00.	SOLD EACH
41-904	Stem nut cover. OEM 45670-80.	SOLD EACH

SLOT FOR LOCK



CHROME PLATED



27-186



A. *ULTIMA® 6˚ BAGGER TRIPLE TREES*

Now you can properly rake your Baggers when running a 21" or 23" front wheel . No frame modifications required. Sold as kit.

29-105 6 degree triple trees for 97-13 Touring models
Will NOT fit Road Kings®

29-106 6 degree triple trees for '14-17 Touring models
Will NOT fit Road Kings®

A



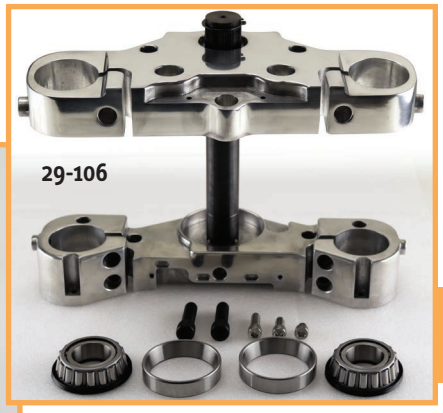

3

B. *ULTIMA® BILLET TREE WITH HIDDEN STEM NUT*

Chrome plated billet trees for 41MM fork tubes. Features include a stainless steel stem with hidden stem nut and a hole in the bottom tree to be used as a headlight mount. Tree is made with both internal & external fork stops.

SOLD AS SET

	PLAIN CHROME	**PLAIN BLACK**	BALL MILL CHROME
0 DEGREE	**29-115**	**29-250**	**29-116**
5 DEGREE	**29-78**	**29-251**	**29-79**

NOTE: Internal stop trees must use **MW#5-252** style head cups.

B

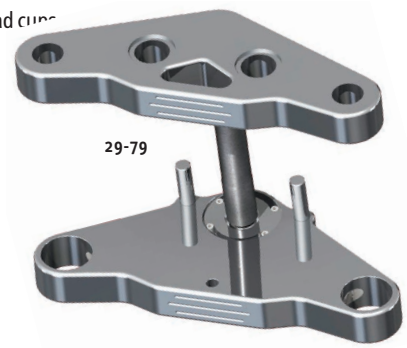



C. *ULTIMA® BILLET BLIND TREE*

Chrome plated billet trees for 41MM fork tubes. These trees offer an extremely clean custom look without the clutter of the stock style tube caps and stem nut. Features include a stainless steel stem with hidden stem nut, stainless steel fork tube plug holders, and a hole in the bottom tree to be used as a headlight mount. Tree is made with both internal & external fork stops.

SOLD AS SET

	PLAIN CHROME	POINTED CHROME	**POINTED BLACK**
0 DEGREE	**29-82**	**29-61**	**29-252**
5 DEGREE	**29-87**	**29-52**	**29-253**

NOTE: Internal stop trees must use **MW#5-252** style head cups.

C



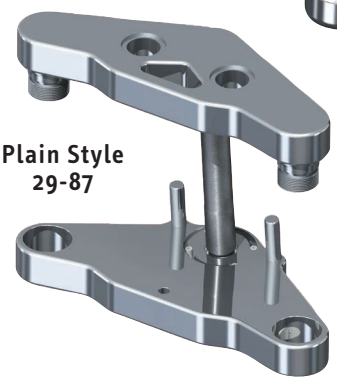



3

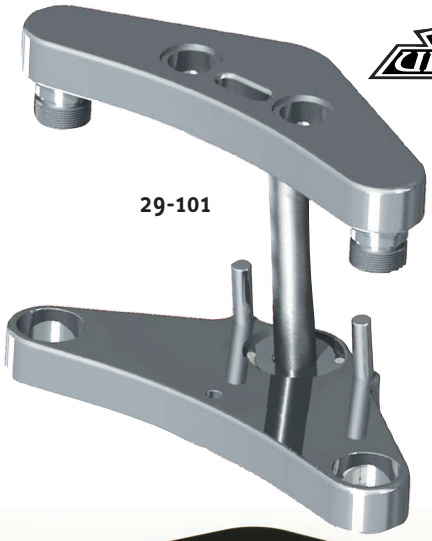

A

A. *ULTIMA® BILLET BOOMERANG BLIND TREE*

Chrome plated boomerang style billet trees for 41MM fork tubes. These trees offer an extremely clean custom look without the clutter of the stock style tube caps and stem nut. Features include a stainless steel stem with hidden stem nut, stainless steel fork tube plug holders, and a hole in the bottom tree to be used as a headlight mount. Tree is made with both internal & external fork stops. SOLD AS SET

	CHROME	BLACK
0 DEGREE	**29-76**	**29-254**
5 DEGREE	**29-101**	**29-255**

NOTE: Internal stop trees must use **MW#5-252** style head cups.



B. *REPLACEMENT PARTS FOR ULTIMA® TREES*

27-200	Lower stem nut for hidden trees.	SOLD EACH
27-201	Fork caps for hidden trees.	SOLD EACH
27-189	Fork stops. Fits all Ultima® triple trees.	SOLD EACH
27-187	Oversized fork stops. Fits all Ultima® triple trees. 1" diameter, 1-1/2" tall.	SOLD EACH
27-253	Replacement, bolt for slotted tree.	SOLD AS PAIR
27-254	Replacement cam lock and bolt.	SOLD EACH

C



ALL CLAMP SETS CHROME PLATED

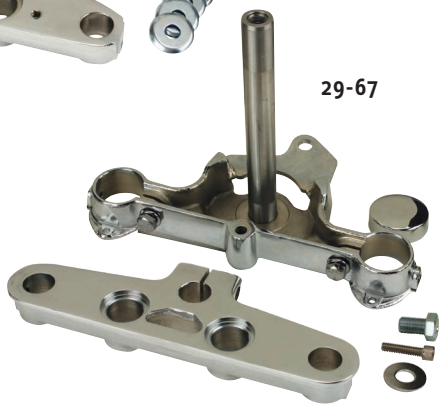

C *FORK CLAMP SETS*

Fits fork tubes with O.D. 1.625". Top clamp has riser mount holes 3.5" center to center.

29-45	Fits Big Twin 1949 & later. FLH style. Chrome plated tree. OEM 45700-48 & 56121-60A.	SOLD AS SET
29-67	Fits Fat Boy® and Heritage Softail® models. Chrome plated. Replaces OEM 45456-86 & 45603-86.	
29-68	Fits FXST, FXSTC Softail® models. Chrome plated. Replaces OEM 445672-80A & 45640-88B.	

NOTE: See Section 4 for handlebar bushings.

A. *CHROME 41MM TITUS FORK BRACE FOR FXST 2000-2013 & FXDWG 1999-2005*

29-107 Chrome 41mm Titus fork brace kit
Fits: FXST 2000-2013 / FXDWG 1999-2005 models

A

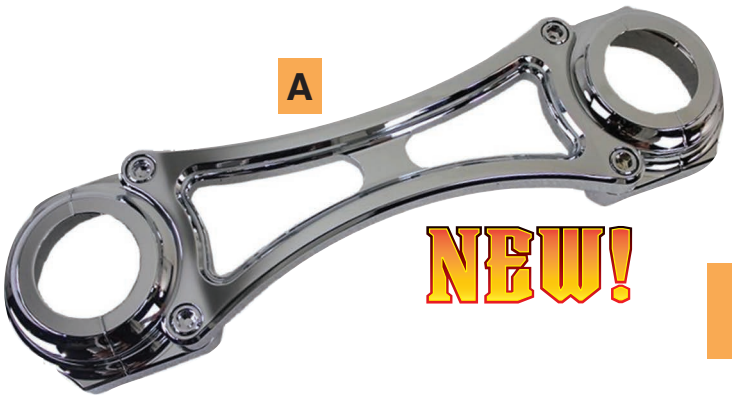

B. *CHROME PLATED FORK TUBE BOLTS AND STEM NUT*

Our chrome plated fork tube bolts and stem nut offer a smooth contour design on top to enhance the appearance of your motorcycle.

27-162 Contoured stem nut. Fits XL and FX models with narrow glide forks, our Chrome Horse® billet triple trees, as well as most custom billet triple trees Replaces OEM 45716-71. SOLD EACH

27-163 Contoured fork tube bolts. Fits Wide Glide® style forks late 1977 & later with non-vented fork stem nuts. Replaces OEM 45839-77. SOLD EACH

27-62 STEM NUT. COLONY (OEM 45716-71)

To protect the finish of your chrome triple tree we suggest using Colony chrome fork tube bolt washers.

41-103 Fork tube bolt washers for FL, FXWG, & Softail® 1978 & later. OEM 5710. SOLD AS PAIR

B


27-163


27-162



41-103

C. *HARDWARE FOR WIDE GLIDE® TRIPLE TREE*

CHROME PLATED EXCEPT AS NOTED

41-127 Cap nut; 1-24 thread for 1948 & later.

27-110 Standard nut; 1-24 thread for 1948 & later. OEM 456718-60.

27-106 Lock washer for 1960 thru early 1977. OEM 45717-63. Not chrome.

27-69 Jam nut with dust guard; 1-24 thread for 1949 & later. OEM 48330-48A.

41-904 Stem nut cover for FXWG & FXST. OEM 45670-80. 1/4" - 20 Stud inside center.

41-26 Zinc plated stem bolt & washer for Sportster® & FXR, 1988 & later, Dyna® Narrow Glide and FLST models. Replaces OEM 4453 & 6655. 5/8 - 18 x 1". Drilled & tapped 1/4" - 20 on top to accommodate stem nut cover part No. **41-904** above. Colony.

C

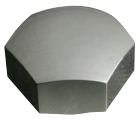
41-127


27-106


27-110

ALL PART SOLD EACH



41-26


27-69


41-904

D. *STEERING DAMPER KIT*

These stabilizer kits cut down high speed wobble. For use on high performance racing applications. Seven adjustments on damper. Mounting hardware included. Satin finish aluminum body.

27-122 Fits FXSTC Softail® 41mm tubes. Bikes with fork tins cannot use this —tins interfere with mounting. Body length: 7-9/16". Slide shaft & swivel joint: 14-3/4" long. SOLD AS KIT

D


27-122

A







95-441



B



95-111



95-901

C



95-902

D



89-107



86-70



89-257
CHROME
PLATED
ALUMINUM

A. *FORK GASKETS AND SEAL KITS*

95-360 Fits H-D® 74" & 80" late 1977 & later (includes 6 pieces). OEM 45849-77. SOLD AS KIT

95-177 Fits H-D® 74" 1949 thru early 1977 using Glide front end (includes 10 pieces). OEM 45849-49.

95-440 Fits FLT, FLHT, FXWG and FXST, 1984 & later (includes 8 pieces). OEM 45849-84.

95-438 Fits FX 1973 thru 1977 and Sportster® 1973 & 1974, with Kayaba 35mm forks (includes 8 pieces). OEM 45849-73.

95-439 Fits FX 1976 thru 1983 and Sportster® 1975 thru 1983, with Showa 35mm forks (includes 8 pieces). OEM 45849-75.

95-441 Fits FX, FXR and Sportster®, 1984 thru 1987, with Showa 35mm forks (includes 8 pieces). OEM 45849-84A.

95-442 Fits FXR, Dyna Glide® and Sportster®, 1987 & later, with Showa 39mm forks (includes 10 pieces). OEM 45849-87.

B. *FORK SEALS*

NARROW GLIDE FORKS

95-113 For Sportster® & FX, 1971 & 1972, OEM 45975-71. SOLD EACH

95-206 For Sportster® & FX, 1973 thru 1976, Kayaba forks. OEM 45927-73.

95-205 For Sportster®, FX & FXR, 1975 thru 1983, Showa forks. OEM 45400-75.

95-400 For Sportster®, FX & FXR 35mm, Showa forks. OEM 45387-83.

95-401 For Sportster®, FX & FXR, 39mm, Showa forks. OEM 45378-87.

WIDE GLIDE® FORKS

95-111 For FL & FLH, 1949 thru early 1977. OEM 45852-48. SOLD EACH

95-326 For FL & FLH, late 1977 thru 1984. Also FXWG, FLT & FLHT, 1980 thru 1983. OEM 45843-77.

95-399 For FLT, FLHT, FXWG & Softail®, 1984 thru 1995. OEM 45875-84.

C. *FORK SEALS & BUSHINGS*

95-901 Fork seal and bushing kit 41mm. SOLD AS KIT

95-902 Fork seal, bushing and rebuild kit 49mm. SOLD AS KIT

D. *HEADLIGHT HOUSING FOR FL*

89-257 For FL 1960 & later. OEM 67847-60 & OEM 67848-60. SOLD AS SET

86-70 Headlight rim, gasket & spring clips. Fits FL & FLH 1960 thru 1980. OEM 67712-60A. SOLD AS KIT

89-107 Visor for all 7" Big Twin headlights 1949 & later, also part No. **8-77**. SOLD EACH

A. *FRONT FORK TRIM FOR FL*

Chrome plated. SOLD EACH

89-278 Chrome plated rear left fork panel.

B. *FORK TIN FOR HERITAGE SOFTAIL®& FAT BOY®*

Chrome plated steel tins to give that "antique" look. Chrome hardware included.

89-349 Fits all Heritage Softail® and Fat Boy®, 1986 & later. Replaces OEM 67808-86, 67816-86 & 67820-86. SOLD AS KIT

C. *CHROME FORK TUBE COVERS*

Fits FL 1949 thru 1988, FLT, FLHT, FLHR, 1980 thru 1999, and all models FLSTC, FLSTF & FLSTN.

27-71 Stock length; 6" long. OEM 45963-97. SOLD AS PAIR
27-72 2" Over stock size.
27-73 4" Over stock size.

D. *CHROME BOOT CAPS*

These caps fit over the stock boots to give that custom look.

27-74 For Kayaba forks, 35mm. SOLD AS PAIR
27-75 For Showa forks, 39mm
27-94 For Wide Glide®, 1949 thru early 1977.
27-117 For FXWG 1980 thru 1986 and Softail® 1984 & later (except FXSTS, FXSTF & Heritage Softail®).

E. *2-PIECE FORK BOOT COVERS*

Two-piece fork boot covers to fit over the rubber boot without taking apart the front end. Held together with springs.

27-120 Fits FXST & FXWG models, 1980 & later. Replaces OEM 45415-82. SOLD AS PAIR
27-121 Fits FX & FXR models, 1976 thru 1987 and Sportster® 1975 thru 1987. Replaces OEM 45411-82. SOLD AS PAIR

F. *FORK BOOTS*

27-76 For Sportster® & Super Glide®, 1971 & 1972.
27-60 For Sportster® & Super Glide®, Kayaba forks.
27-61 For Sportster® & Super Glide®, Showa forks.
27-108 For FXWG & FXST, 1980 & later (except Dyna Wide Glide®, Heritage Softail® and Fat Boy®). OEM 45420-80.

G. *FORK SEAL RETAINING RING*

Steel spring wire zinc plated just like stock. For FL 4 speed late 1977 thru 1984, FLT & FLHT 1980 thru 1983, FXWG 1980 thru 1986, and Softail® 1984 & later.

27-109 Fork seal retaining ring. OEM 45842-77. SOLD EACH

H. *HEAD CUP FOR BIG TWIN, SUPER GLIDE® & 45" SERVI-CAR*

5-34 Head cup with race. OEM 48311-60. SOLD EACH
95-444 Bearing race only, OEM 48315-60. Timken.
95-443 Bearing. Timken.

A



LEFT

B



CHROME PLATED

C



D



CHROME PLATED

E



CHROME PLATED

F



27-76

SOLD AS PAIR

G

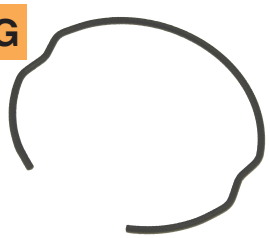

H



5-34



CHROME PLATED

95-443

3

3

A



95-107

B



5-251

C



D



E



CHROME PLATED

95-445

95-655

F



G



A. *HEAD CUP & RACE BALLS FOR SPORTSTER®*

For Sportster® 1977 & earlier and 45" Solo & Servi-Car front ends.

95-107 Head race ball, 5/16". Big Twin uses. 34 balls; Sportster®, 45" Solo & Servi-Car use 28 balls. OEM 8860. SOLD EACH

B. *FORK CUPS*

5-251 Polished stainless steel neck cups with internal fork stops. Fits all frames that accept neck cups. SOLD AS KIT

5-252 Same as #5-251, but without the machined insert. To be used with Ultima® internal stop trees.

C. *LOWER HEAD CUP WITH FORK STOP*

Head cup with machined fork stop. Includes pin to keep cup from moving in frame. Frame must be drilled with a 3/16" hole using the head cup as a drill guide. Use with Dyna® or FXR lower tree.

5-219 Head cup with fork stop for Big Twin. SOLD EACH

D. *TAPERED HEAD CUP FOR BIG TWIN*

5-301 Tapered head cup without race. Replaces OEM 48311-60. SOLD AS PAIR

E. *TIMKEN-TYPE BEARING CUPS & BEARINGS FOR SPORTSTER® 1977 & EARLIER*

Timken style conversion kit with bearing included. Converts a stock Sportster® neck to the tapered Timken-type bearing set up.

5-60 Tapered bearing conversion kit for Sportster® 1977 & earlier. SOLD AS KIT

95-445 Timken tapered bearing only. Will also fit Sportster® 1978 thru 1981. SOLD EACH

95-655 Timken bearing race. O.D. 1.9685. SOLD EACH

F. *TAPERED BEARING FOR BIG TWIN, SUPER GLIDE®, 45" SERVI-CAR & SPORTSTER® 1982 & LATER*

Timken tapered bearing. OEM 48300-60.

95-443 Bearing. Timken. SOLD EACH

95-311 Tapered bearing with seal, 1949 & later.

95-444 Race only. OEM 48315-60. Timken.

G. *FORK CUP DUST SHIELDS FOR H-D® 74"*

Replaces OEM 48365-48A (lower) and OEM 48361-80 (upper).

27-97 Dust shields for Big Twin. SOLD AS PAIR

Handlebars, Controls Gauges, Mirrors Cables, Hoses



HANDLEBARS, RISERS,
HAND & FOOT CONTROLS
FOR CLUTCH, BRAKE LEVERS,
SHIFTERS, THROTTLES, MIRRORS,
ALL GAUGES, FITTINGS &
HOUSING, CONTROLS,
SPEEDOMETER, TACHOMETER,
CABLES & HOSES

ULTIMA® 1" DIAMETER CHROME KNURLED REPLACEMENT HANDLEBARS

These 1" dia. bars are made of 14 gauge steel tubing diamond knurled for OEM risers on 3.5" center to prevent slippage. 1982 & Later bars are dimpled for late model controls.

SOLD EACH

BLACK PART #	CHROME PART #	REPLACES OEM NO.	APPLICATION	WIDTH	HEIGHT	CENTER WIDTH	PULL BACK
50-342	**50-250**	56569-86	Fits FLST 1987 thru 1997.	31.32"	11.41"	7.46"	5.22"
50-339	**50-221**	56079-93	Mini "ape hanger." Fits FXDWG 1993 thru 1997.	32.77"	9.13"	6.35"	7.19"
—	**50-248**	55919-82	Fits FLST/N 1990 thru 1997, FLH 1982 thru 1984, and FLHR 1994 thru 1997.	32.57"	4.27"	12.09"	9.01"
50-341	**50-249**	56094-95	Fits Bad Boy® (Springer® fork). Knurled & dimpled.	31.17"	6.01"	6.90"	4.20"
50-343	**50-251**	—	Heritage® style for Road King®. Knurled & dimpled.	31.55"	13.13"	8.06"	5.34"
—	**50-252**	—	Glide® style bar for H-D®. Knurled & dimpled.	35.93"	3.41"	10.35"	6.81".
50-335	**50-225**	—	12" Ape hanger. Knurled, without dimples.	33.45"	12.0"	7.85"	6.91"
50-336	**50-226**	—	12" Ape hanger. Knurled & dimpled.	33.45"	12.0"	7.85"	6.91"
50-337	**50-246**	—	12" Ape hanger (Springer® fork). Knurled & dimpled.	33.45"	12.0"	7.85"	6.91"
50-338	**50-220**	—	16" Ape hanger. Knurled & dimpled.	33.45"	16.0"	8.04"	N/A
50-340	**50-222**	—	16" Ape hanger. Knurled, without dimples.	33.45"	16.0"	8.04"	N/A
50-344	**50-223**	—	Drag bar. Without knurls & dimples.	26.0"	—"	9.0"	5.0"
50-345	**50-224**	—	Standard drag bar for 1982 & later. Knurled & dimpled.	—	—"	9.0"	5.0"
50-346	**50-202**	—	Medium Buckhorn. Knurled & dimpled.	28.75"	6"	9.75"	10.5"
—	**50-204**	—	Pre-77. 35.5"	35.5"	4.5"	10.5"	7.75"

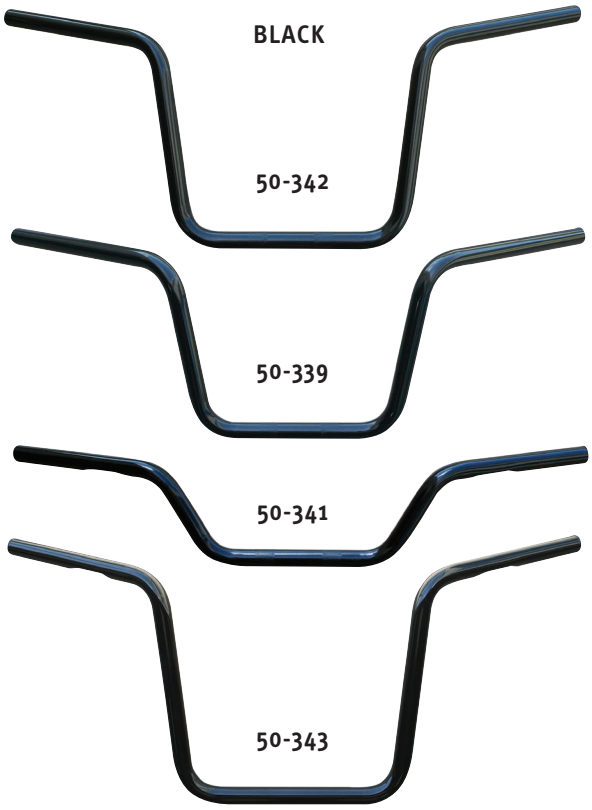



BLACK



50-340



50-344



50-345



50-346

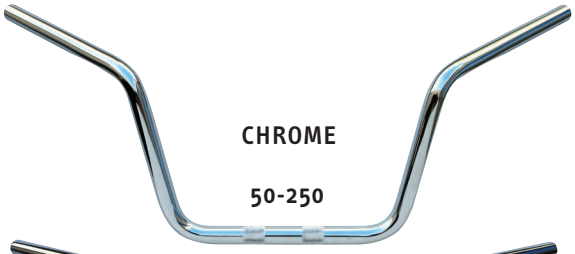

CHROME

50-250



50-221

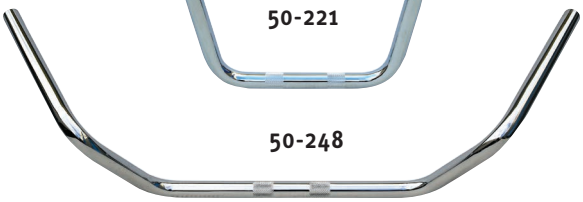

50-248



50-249



50-251

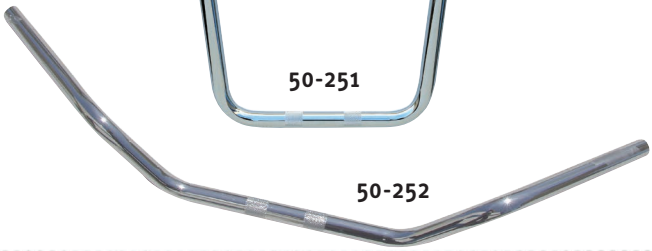

50-252

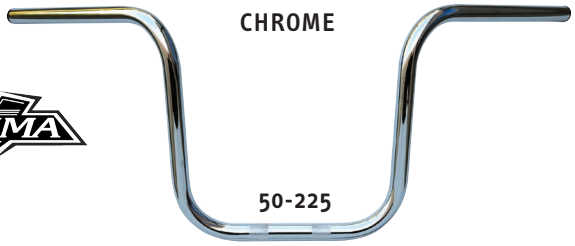

CHROME

50-225



50-246



50-220



50-222



50-223

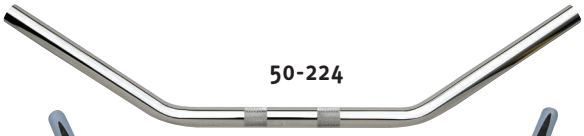

50-224



50-202



50-204

A. *1" HANDLEBARS*

CHROME KNURLED REPLACEMENT HANDLEBARS

Shown below, these 1" dia. bars are made of 14 gauge steel tubing diamond knurled for OEM risers on 3.5" center to prevent slippage. 1982 & Later bars are dimpled for late model controls. SOLD EACH

	REPLACES				CENTER	PULL
PART NO.	OEM NO.	APPLICATION	WIDTH	HEIGHT	WIDTH	BACK
50-181	55919-82	Fits FLST/N 1990 thru 1997, FLH 1982 thru 1984, and FLHR 1994 thru 1997.	32.57"	4.27"	12.09"	9.01"
50-184	56094-95	Fits Bad Boy® (Springer® fork). Knurled & dimpled.	31.17"	6.01"	6.90"	4.20"
50-192	—	Heritage® style for Road King®. Knurled & dimpled.	31.55"	13.13"	8.06"	5.34"
50-188	—	Glide® style bar for H-D®. Knurled & dimpled.	35.93"	3.41"	10.35"	6.81".

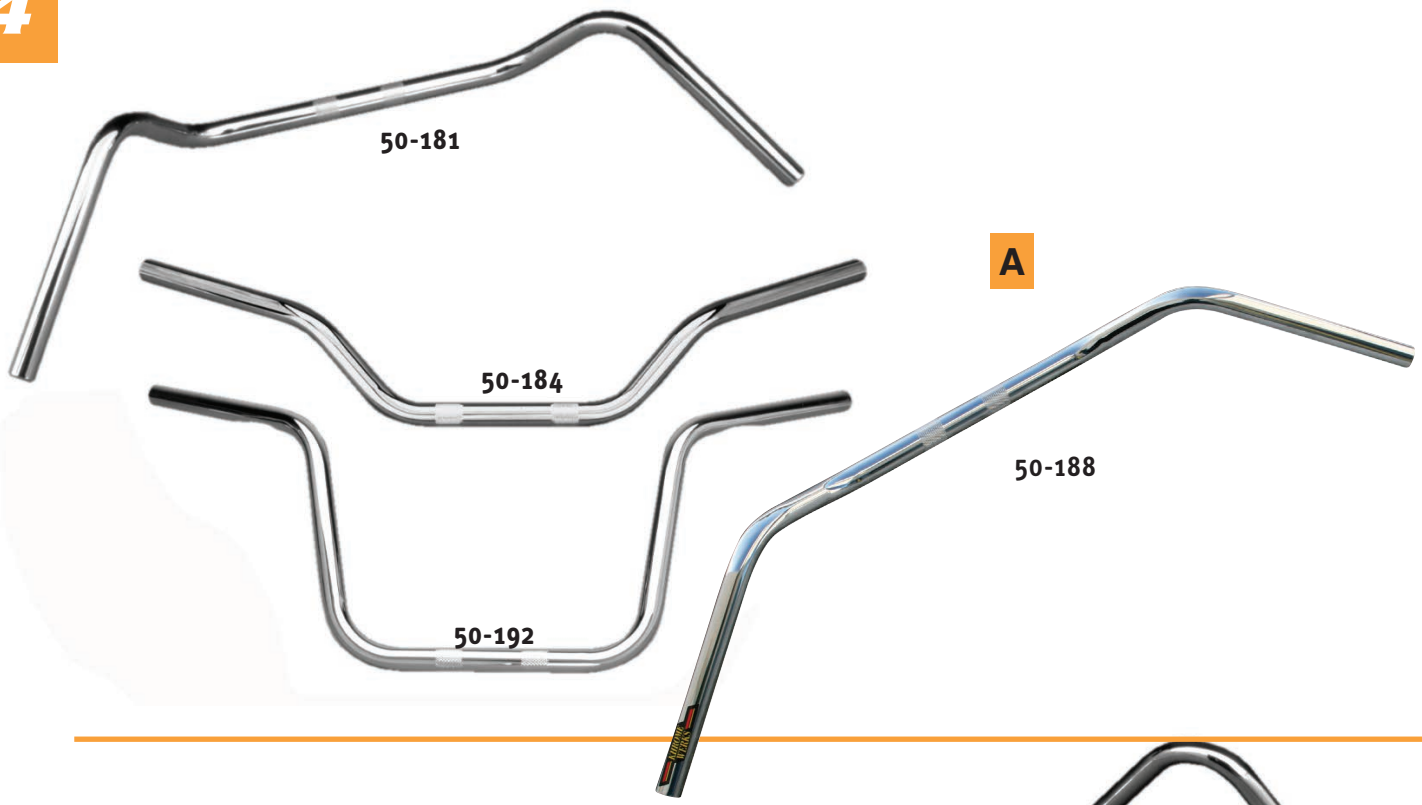

B. *CHROME KNURLED 1" CUSTOM HANDLEBARS*

1" Diameter, 14 gauge steel tubing diamond knurled for OEM risers on 3.5" center to prevent slippage. 1982 & Later bars are dimpled for late model controls.

50-189 Hi-rise buckhorn pullback. Fits H-D® 1982 & later.

50-191 Fat Boy® style. Fits H-D® 1973 thru 1981.

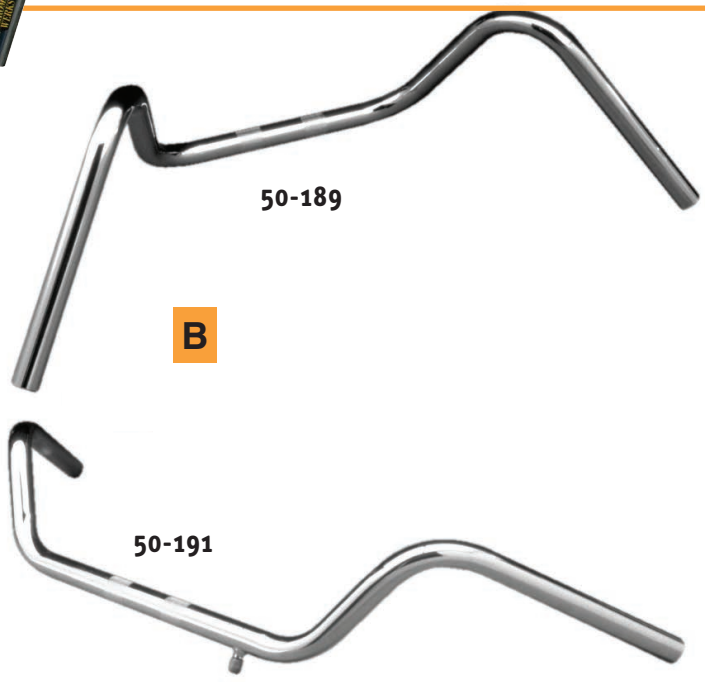

A. *MAMMOTH BARS*

Mammoth bars for 1982 & later. Dimpled for late style controls Centers are knurled. These bars look great on Wide Glide® front ends where mammoth, massive look is cool.

PART NO.	STYLE	WIDTH	HEIGHT	PULL BACK
	1-1/4" DIAMETER HANDLEBARS, 3-1/2" RISER SPACING			
50-263	Drag bars.	30.5"	0.0"	6.25"
50-2	Fat Boy® style.	35.0"	4.25"	9.0"
50-3	Dresser style.	35.0"	5.25"	12"

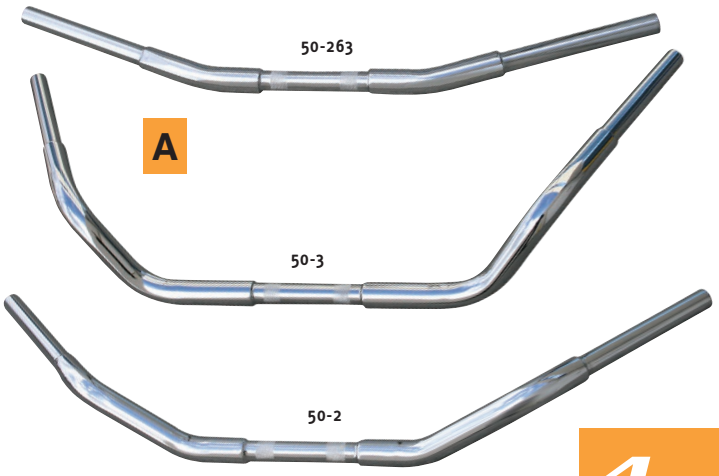

4

B. *ULTIMA® DRAG Y-BARS - CHROME*

These custom drag bars are 1-1/2" Dia. and have either 1 or 2 bend risers, chrome finish. All bars come drilled for internal wiring.

1-1/2 INCH, 4" CENTERS

ONE BEND STYLE - 32" WIDE

50-54 Y-Bar, 1 bend, 6.0" rise. Chrome.
50-55 Y-Bar, 1 bend, 8.0" rise. Chrome.
50-56 Y-Bar, 1 bend, 10.0" rise. Chrome.

TWO BEND STYLE - 31" WIDE

50-57 Y-Bar, 2 bend, 6.0" rise. Chrome.
50-58 Y-Bar, 2 bend, 8.0" rise. Chrome.
50-59 Y-Bar, 2 bend, 10.0" rise. Chrome.

SOLD EACH

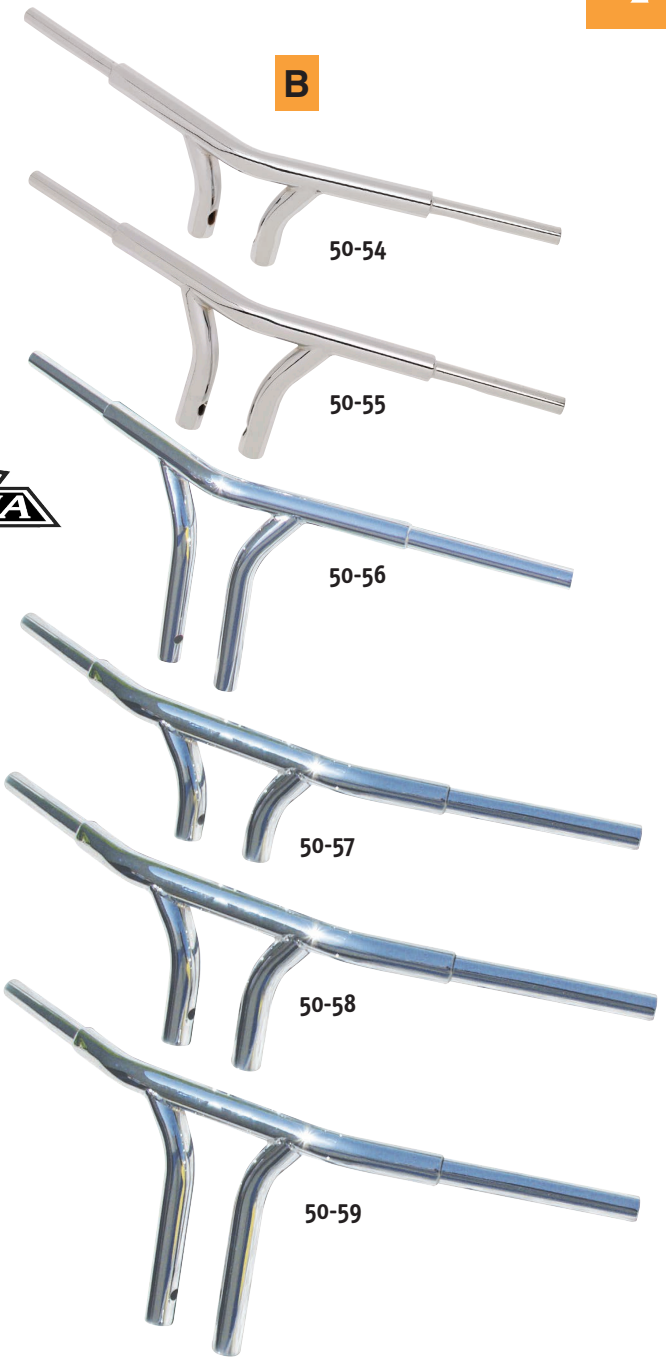

C. *CLUBMAN HANDLEBARS*

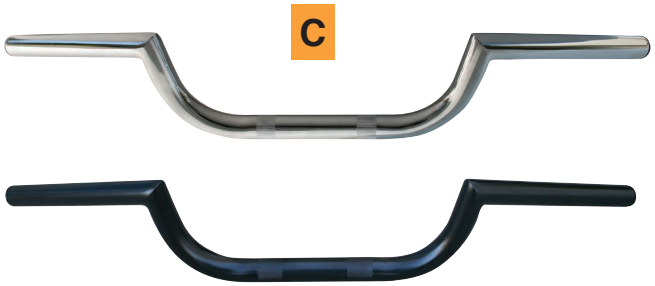

Clubman Handlebars (non-dimpled), durable finish. Made of sturdy carbon steel. Seamless steel tubing construction. 27.5" WIDE, 4.5" drop, 4.5" pullback, 6" center. Available in show-chrome or black finish. SOLD EACH

50-280 Clubman handlebars, chrome.
50-281 Clubman handlebars, black.

1-1/4" CHROME SWEDGED HANDLEBARS

These swedged handlebars have a unique smooth taper transition from the 1-1/4" diameter to the 1" area for mounting the stock OEM style 1" handlebar controls or any 1" custom controls. Also this taper allows you to rotate the master cylinder to any position to clear the bars with any brake line. These bars are made with CNC bender for a smooth radius at each bend. Each handlebar comes with a fishing wire already installed for easy access of pulling your wire harness through the bars. Notched bar end for fly-by-wire applications. Can also be used w/standard throttle cable applications



BLACK PART NO.	CHROME PART NO.	DESCRIPTION	WIDTH	HEIGHT	CENTER WIDTH	PULL BACK
Narrow Body Ape Hangers: Fits all Big Twin and Sportster® models 1982 to present. (Except FLHT and FLHTC Models)						
50-317	**50-300**	11" NARROW BODY APE HANGER	33.75"	11"	10"	11.14"
50-318	**50-301**	14" NARROW BODY APE HANGER	33.75"	14"	10"	10.90"
50-320	**50-302**	17" NARROW BODY APE HANGER	33.75"	17"	10"	10.70"
50-326	**50-303**	19" NARROW BODY HANGER	33.75"	19"	10"	10.70"
Wide Body Ape Hangers: Fits all Big Twin and Sportster® models 1982 to present. (Except FLHT and FLHTC Models)						
50-321	**50-304**	11" WIDE BODY APE HANGER	31.50"	11"	14.25"	8.62"
50-322	**50-305**	14" WIDE BODY APEHANGER	31.50"	14"	14.25"	8.43"
50-323	**50-306**	17" WIDE BODY APE HANGER	31.50"	17"	14.25"	8.27"
50-327	**50-307**	19" WIDE BODY APE HANGER	31.50"	19"	14.25"	8.27"
Dresser Ape Hangers: Fits FLHT & FLHTC models 1982 to present.						
50-324	**50-308**	11" DRESSER APE HANGER	31.50"	11"	15.75"	8.62"
50-325	**50-309**	14" DRESSER APEHANGER	31.50"	14"	15.75"	8.43"
50-328	**50-310**	17" DRESSER APE HANGER	31.50"	17"	15.75"	8.27"
50-329	**50-311**	19" DRESSER APE HANGER	31.50"	19"	15.75"	8.27"
Springer Ape Hangers: Fits Springer models 1988 to present.						
50-330	**50-312**	11" SPRINGER APE HANGER	31.50"	11"	11.50"	9.53"
50-331	**50-313**	17" SPRINGER APE HANGER	31.50"	17"	11.50"	9.29"
Pull Back Bars: Fits most models 1982 to present with 3.50" center to center risers.						
50-332	**50-314**	6" T-BAR	30.25"	6"	9"	11.42"
50-333	**50-315**	8" T-BAR	30.25"	8"	9"	11.42"
50-334	**50-316**	10" T-BAR	30.25"	10"	9"	11.42"

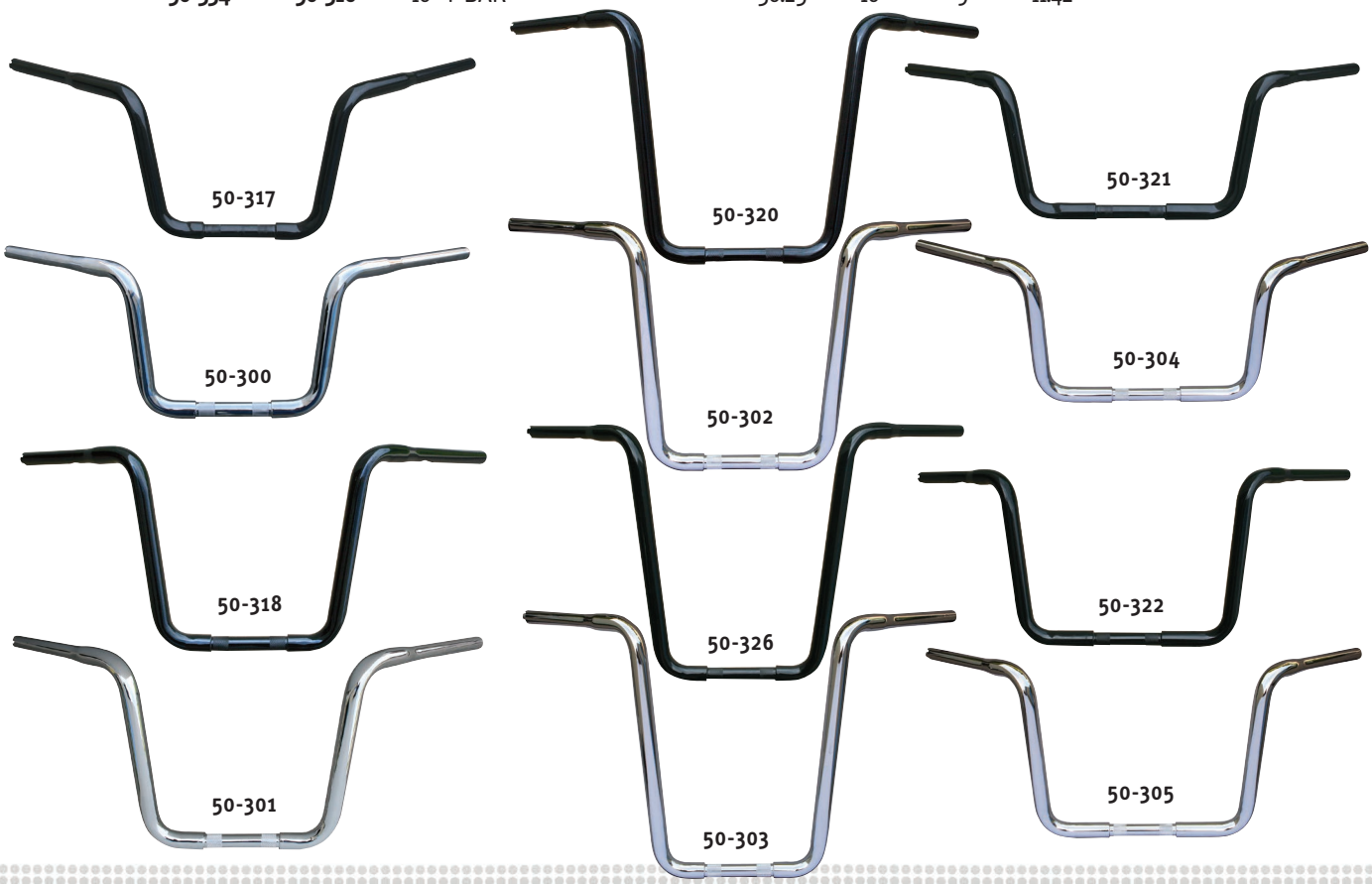

1-1/4” CHROME SWEDGED HANDLEBARS

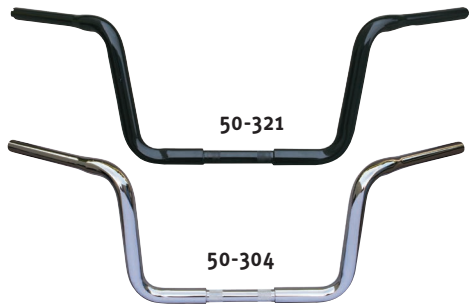

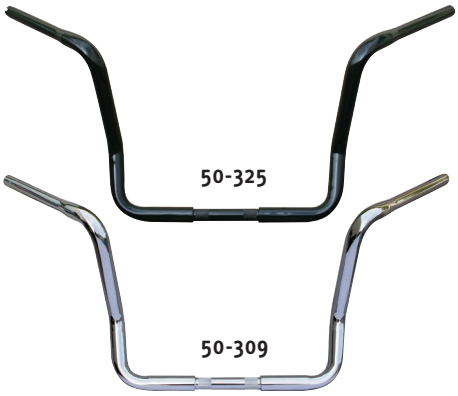



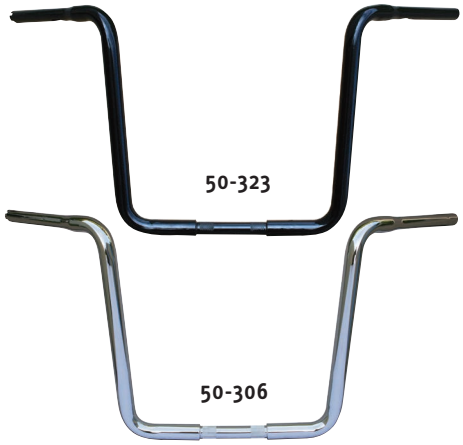



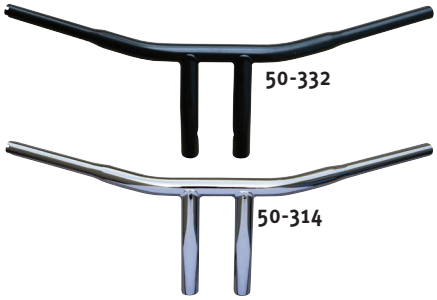

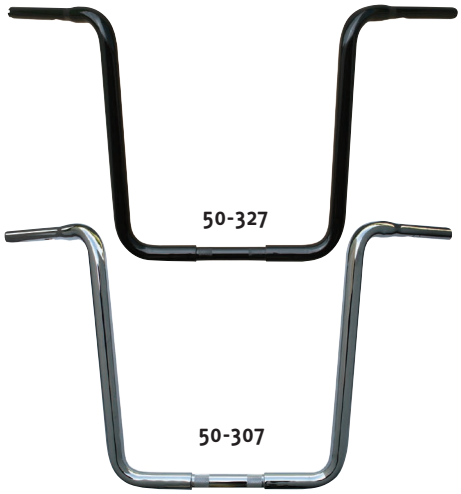







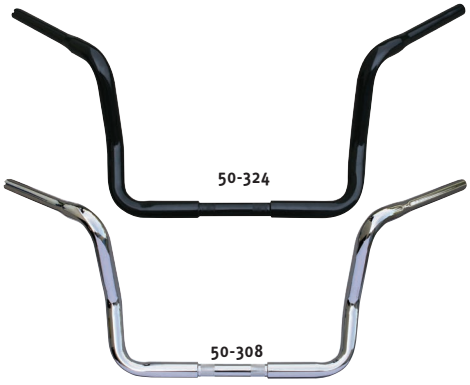





NEW!



FATTY Z HANDLEBARS

These 1.25" dia. bars are knurled for OEM risers on 3.54" center to prevent slippage.

CHROME PART #	BLACK PART #	APPLICATION	WIDTH	HEIGHT	KNURL WIDTH	PULL BACK
50-347	**50-348**	Fatty Z Handlebar 11" w/o dimples	30.31"	11"	3.54"	5.02"
50-349	**50-350**	Fatty Z Handlebar 14" w/o dimples	30.31"	14"	3.54"	5.02"



TALL 1.25" HANDLEBARS

These 1.25" dia. bars are made of 14 gauge steel tubing diamond knurled for OEM risers on 3.5" center to prevent slippage. 1982 & Later bars are dimpled for late model controls.

CHROME PART #	BLACK PART #	REPLACES OEM NO.	APPLICATION	WIDTH	HEIGHT	KNURL WIDTH	PULL BACK
50-351	**50-352**	55800550A	12" Fits FLTR 2015 & Later.	32.5"	12"	3.15"	10.50"
50-353	**50-354**	55800550A	14" Fits FLTR 2015 & Later.	32.5"	14"	3.15"	10.50"
50-355	**50-356**	55800550A	16" Fits FLTR 2015 & Later.	32.5"	16"	3.15"	10.50"



FAT APE 1.25" HANDLEBARS

These 1.25" dia. bars are made of 14 gauge steel tubing diamond knurled for OEM risers on 3.5" center to prevent slippage. 1982 & Later bars are dimpled for late model controls.

CHROME PART #	BLACK PART #	REPLACES OEM NO.	APPLICATION	WIDTH	HEIGHT	KNURL WIDTH	PULL BACK
50-357	**50-358**	55800548A	12" Fits FLTR 2015 & Later.	32.5"	12"	3.15"	9.67"
50-359	**50-360**	55800548A	14" Fits FLTR 2015 & Later.	32.5"	14"	3.15"	9.67"
50-361	**50-362**	55800548A	16" Fits FLTR 2015 & Later.	32.5"	16"	3.15"	9.67"



MONKEY 1.25" HANDLEBARS

These 1.25" dia. bars are made of 14 gauge steel tubing diamond knurled for OEM risers on 3.5" center to prevent slippage. 1982 & Later bars are dimpled for late model controls.

CHROME PART #	BLACK PART #	REPLACES OEM NO.	APPLICATION	WIDTH	HEIGHT	KNURL WIDTH	PULL BACK
50-363	**50-364**	—	10" Fits Bagger.	34.84"	10"	3.54"	8.74"
50-365	**50-366**	—	12" Fits Bagger.	34.84"	12"	3.54"	8.74"
50-367	**50-368**	—	15" Fits Bagger.	37.0"	15"	3.54"	7.68"

A. *CUSTOM HANDLEBAR CLAMP COVER*

Fits FL 1960 thru 1979 and replace OEM 56590-60.

89-258 Plain chrome handlebar cover. SOLD EACH

B. *CUSTOM UPPER HANDLEBAR CLAMPS*

Quality die cast handlebar clamps for Sportster® and Super Glide®.

34-77 Plain with long skirt. SOLD EACH
34-78 Plain with short skirt.

C. *RIBBED HANDLEBAR TOP CLAMP*

Chrome plated, die cast, without skirt.

34-105 Fits all H-D® stock style two piece risers 1974 & later. Replaces OEM 56115-79. SOLD EACH

D. *SCALLOPED HANDLEBAR TOP CLAMP*

Chrome plated, die cast, scalloped handlebar clamp without skirt.

34-104 Fits all H-D® stock style two piece risers 1974 & later. SOLD EACH

E. *FXST STYLE CHROME RISERS*

WITH TOP CLAMP & ALLEN SCREWS

34-115 Risers & scalloped top clamp
34-117 Risers & plain top clamp without skirt.

F. *FXWG STYLE RISERS*

4-1/2" Tall replicas of FXWG risers, OEM 56063-82A. Can be used with any top clamp.

34-93 Risers SOLD AS PAIR

G. *SHORT RISERS FOR FL & FX*

Die cast, chrome plated risers can be used on all models.

34-92 Fits FL 1977 thru 1984. Height is 1-3/4". Thru bolt design. OEM 59940-79 and 59941-79. SOLD AS PAIR
34-101 Fits FX 1979 thru 1983. Height is 2-1/16". 1/2" - 13 threaded. OEM 56117-77.

H *H-D® OEM STYLE RISERS*

This riser is a replica of the early H-D® riser. It includes inside rubber damper. Cap has counter-sunk allen bolts. Thru bolt & nut is included. For 7/8" handlebars order our part No. **34-82** reducers.

34-76 5" High for 1" handlebars. SOLD AS PAIR

I. *9.5" PULLBACK RISERS*

Massive 1-1/4" shafts perfect for fat handlebars. 30°Bend at 6" up. Uses top clamps as on catalog page 4-7; "OEM style." Bottom mount holes 1/2" x 13 threads.

34-126 9.5" Pullback risers; mounts 1" bars. SOLD AS PAIR



4

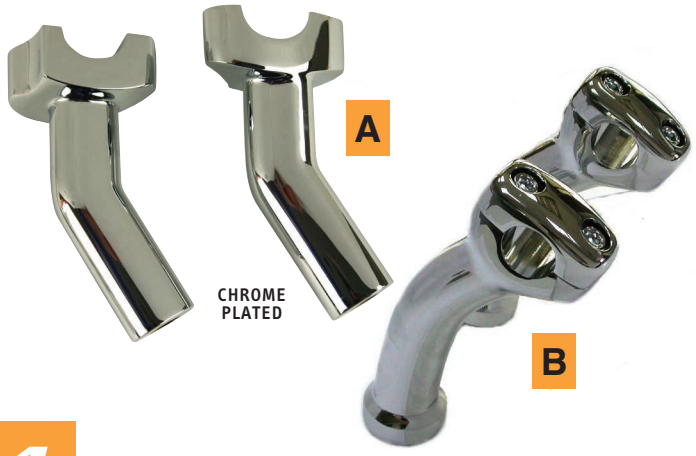



TRIPLE NICKEL CHROME PLATED FINISH







A. *PULLBACK RISERS FOR SPORTSTER® AND SUPER GLIDE®*

Designed to accept stock upper handlebar clamp or our custom clamps shown at left. 1-1/2" Set back, 4-1/2" rise so handlebars will clear Fat Bob® tanks. SOLD AS PAIR

34-90 Risers only. For any Sportster® or Super Glide®.

B. *PULLBACK RISERS*

Large diameter risers give a heavy duty look to the front end. Looks take a cue from the Harley® Deuce™ Fits 00'-later FX Softails® with stock triple trees and 1" handlebars. SOLD AS PAIR

34-119 Pullback risers

C. *ROUND "GLIDE RISER"*

Mount with 1/2"-13 bolts. For 7/8" handlebars order our part No. **34-82** reducers.

34-5 4" High for 1" handlebars. SOLD AS PAIR
34-6 6" High for 1" handlebars.
34-7 8" High for 1" handlebars.

D. *ROUND RISERS*

Custom handlebar risers completely machined from solid cold rolled steel. The pre-threaded stems bolt directly to triple tree. The clamp assembly features counter-sunk allen head bolts for that clean cosmetic appeal. Risers are adaptable to most all springers and girders. Mount with 1/2"-20 bolts. For 7/8" handlebars order part No. **34-82** reducers.

34-70 4" High risers for 1" handlebars. Sold as pair.

E. *2" GATTLIN STYLE RISERS*

These risers are CNC made from 6061-T6 billet aluminum and are beautifully chrome plated. Fit 1" diameter handle bars.

34-155 Gattlin style, 2" riser set, chrome. SOLD AS PAR

F. *HOLLOW POINT STYLE RISERS*

These risers are CNC made from 6061-T6 billet aluminum and are beautifully chrome plated. Fit 1" diameter handle bars.

34-133 Hollow Point style, 2" riser set, chrome. SOLD AS PAIR
34-134 Hollow Point style, 4" riser set, chrome.
34-139 Hollow Point style, 6" riser set, chrome.
34-148 Hollow Point style, 8" riser set, chrome.
34-159 Hollow Point style, 10" riser set, chrome.

G. *FLUSH MOUNT RISER BOLTS*

Riser bolt kits are designed so you cannot see bolt heads. Available in two thread types.

34-128 Riser mounts, 1/2" x 13. SOLD AS KIT
34-129 Riser mounts, 1/2" x 20.

A. *FORGED ALUMINUM RISERS*

These risers are forged from 6061-T6 aluminum for superior strength. Designed to fit applications with 3.5" center to center riser mounts & accept most top clamps. Available in a variety of sizes and with a chrome or black finish.

34-167 3.5" forged alum riser, chrome. SOLD AS PAIR
34-168 4.5" forged alum riser, chrome.
34-169 5.5" forged alum riser, chrome.
34-170 6.5" forged alum riser, chrome.
34-171 8.5" forged alum riser, chrome.
34-173 4.5" forged alum riser, black.
34-174 5.5" forged alum riser, black.

A



34-167



34-168



34-173

4

B. *CHROME RISER BOLT KITS*

Bolt kits for threaded riser and handlebar/riser combinations.

41-430 1/2-13 x 2-3/4 Riser bolt kit. Fits stock and aftermarket risers with coarse threads. Includes chrome bolts, lock washers and hardened flat washers. SOLD AS SET
41-431 1/2-20 x 2-3/4 Riser bolt kit. Fits stock and aftermarket risers with fine threads. Includes chrome bolts, lock washers and hardened flat washers.
41-432 1/2-13 x 3-3/4 Riser bolt kit. Fits stock and aftermarket unthreaded risers. Includes chrome bolts, hardened flat washers and lock nuts.

B







C. *SPRING RISER ADAPTORS*

Allows the use of any 73'-present regular riser, with individual top caps, with 1/2"-13 threads inside on springer models 88'-present fitted with 5/8"-18 to tree assemblies. Replaces the current springer threaded stud in the top tree assemb ly. Cannot be used with risers with one piece top clamp or bolt through style risers.

41-427 Springer riser adaptors. SOLD AS SET

C



D. *SOLID RIDE HANDLEBAR DAMPERS*

Fits all models 1974 & later. Urethane bushings cut down vibration and at the same time give a more stable feel to the handlebars. Kit includes cup, sleeves and bushings. SOLD AS KIT

34-110 Heavy duty "Black" bushings w/chrome washers & tube.
34-125 Heavy duty "Red" bushings w/chrome washers & tube.

D



E. *FLUSH MOUNT HANDLEBAR BUSHING KIT*

Kit features black bushings with chromed hardware. Fits all models with 3.5" riser centers from 73' to present (except springer models) when 1/2"-13 thread risers are used.

34-127 Flush mount busing kit. SOLD AS KIT

E



F. *HANDLEBAR DAMPERS*

34-89 Fits all XL & FL models 1974 & later. OEM 56159-73, 56153-73 & 56158-73. SOLD AS PAIR
34-91 Fits Wide Glide® top tree. OEM 56158-49. SOLD EACH

F

34-89



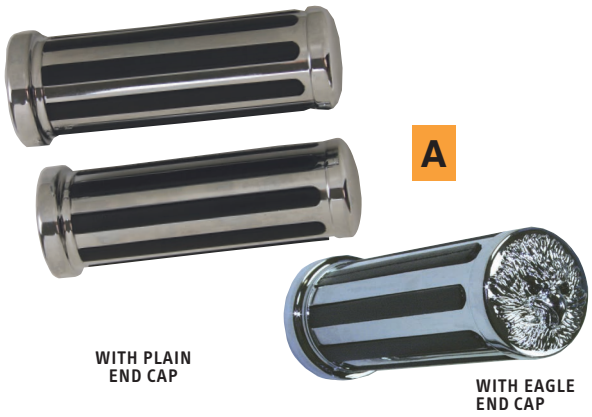

A. *RAIL STYLE HAND GRIPS*

The latest in high tech and comfort! Die cast chrome plated grips with slotted rubber inserts.

35-66 Grips for 1" handlebars. 5" Long. SOLD AS PAIR
35-76 Same as part No. **35-66** above except with Eagle end cap.
35-68 Plain end cap grips for 2008-later FLT.

B. *BILLET STYLE V-GROOVE GRIPS*

5" Long chrome grips for dual cable.

35-92 Straight profile V-groove grips. SOLD AS PAIR



C. *FLAME GRIP SET*

Flame design grip set fit a 1" bar, 5" long. SOLD AS SET

35-127 Chrome billet aluminum with black rubber insert.
35-128 Same as #35-127, fits 2008-later FLT.



D. *KNURLED GRIPS*

These billet aluminum grips are available in three colors & fit 1" diameter bars.

35-112 Bronze grip set. SOLD AS PAIR
35-113 Black grip set. SOLD AS PAIR

E. *CHROME HORSE GRIPS*

Chrome Grips with wide bands for all 1" diameter handlebars. The throttle sleeve is set up for push/pull cable system.

35-96 Chrome Horse wide band grips. SOLD AS PAIR









A. *CUSTOM HAND GRIP SETS*

Custom hand grips to customize your bike. Made from high quality aluminum & chrome plated. SOLD AS PAIR

35-153 Grooved grips with Maltese Cross on ends

35-158 Ribbed grips with pointed ends



B. *GENUINE LEATHER GRIPS*

Genuine black leather covers over foam comfort grips with bright chrome plated ends.

35-55 Leather grips for 1" handlebars. 5" long. SOLD AS PAIR

C. *CHROME END SOFT GRIPS*

Extra soft neoprene foam cover absorbs vibration. Chrome end caps.

35-44 Fits 1" handlebars. SOLD AS PAIR

D. *PEBBLE GRAIN GRIPS*

This is a different type grip — not to be confused with a foam grip. This style has the same "cushy" feeling to knock out vibration but not the porosity found in the foam grip, resulting in a longer lasting grip that won't absorb moisture or have dirt build-up. Bright chrome ends with black grip.

35-53 Grips for 1" bars, 5" long. SOLD AS PAIR

E. *VINTAGE STYLE GRIPS*

Black vintage style grip sets with chromed accent band.

35-108 Fits 96' & up (OEM#56275-96) SOLD AS SET

35-109 Fits 82' thru 95' (OEM#56276-96)

35-4 Fits 08' FLT



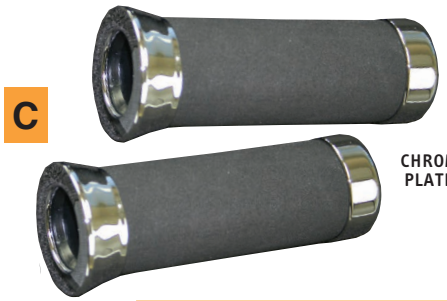









A. *"BARREL" GRIPS*

Die cast, chrome plated "barrel" style grips with Rail or Twist style rubber inserts. For 1" handlebars. Includes sleeve.

35-90	Rail style "barrel" grips.	SOLD AS PAIR
35-91	Twist style "barrel" grips.	

B. *ROADHAWK SOFT GRIPS*

Extra soft foam. Super looking and soft to the feel for comfort.

SOLD AS PAIR

35-40	Replacement foam covers for above part No. **35-37**.

C. *THROTTLE GRIPS WITH SLEEVE*

Handlebar grip set with nylon dual cable throttle sleeve.

35-42	For all models 1981 thru 1995. Replaces OEM 56220-81B.	SOLD AS SET
35-87	For all models 1996 & later. Replaces OEM 56206-96 & 56220-94A.	

D. *THROTTLE SLEEVES*

Replacement throttle sleeves for H-D®. Single or dual cable styles.

35-1	Single cable. Fits 1973 thru 1980.	SOLD EACH
35-2	Dual cable. Fits 1981 thru 1995.	
35-3	Dual cable. Fits 1996 & later.	

E. *TORNADO II HAND GRIPS*

The Tornado II grip sets are CNC machined from billet aluminum and are available in a beautiful chrome or black anodized finish. They also feature non-slip hard wearing black rubber for fail safe operation.

Fits 1" dia. handle bars, all HD models, twin cable throttle applications.

35-14	Chrome, Tornado II grip set.	SOLD AS SET
35-15	Black anodized, Tornado II grip set.	

HD 08"-up touring models with electronic throttle.

35-16	Chrome, Tornado II grip set.	SOLD AS SET
35-17	Black anodized, Tornado II grip set.	

F. *DIAMOND STYLE HAND GRIPS*

Die cast chrome plated grips with diamond rubber inserts.

35-73	Grips for 1" handlebars. 5" Long.	SOLD AS PAIR
35-85	Same as part No. **35-73** above except with Eagle end cap.	

G. *STOCK H-D® STYLE GRIPS*

Black grip, OEM 56205-62A, fits Big Twin & Sportster®, 1962 thru 1980.

35-47	Grip.	SOLD AS PAIR
35-51	Grip plug fits hole in grip on 1960 thru 1983 Harleys®. OEM 56238-62.	SOLD AS PAIR

See Sec. 2 for Rail foot pegs, shifter peg & "popsicle" kick pedal.
See this section for Rail brake pedal pad.

A. *ELECTRIC THROTTLE HEATED GRIPS FOR 1" HANDLEBARS*

OE Style heated grips with innovative thumb switch design which enables riders to easily scroll through temperature levels without taking a hand off the handlebars. Features soft to the touch rubber comfortable for short or long rides. Fits HD® electronic throttle & fly by wire.

NEW!

Specifications:

- Integrated temperature level thumb switch
- Universal fitment designed to fit most H-D® models
- 5 Temperature levels to choose from
- 5 color LED indicator to dis[lay temperature setting in use
- Low battery cut-ff protection
- Internal memory allows the grip to stay at previous warmth level

35-56 Apollo-X heated hand grips, Black
35-57 Titan-X heated hand grips, Chro me.



B. *IMPORTED THROTTLE ASSEMBLY & GRIPS*

Assembly with chrome plated end comes with black rubber grips. Has anchor to hold throttle cable.

35-6 Assembly for 1" handlebar. SOLD AS SET
35-7 Assembly for 7/8" handlebar. SOLD AS SET



C. *GRIPS FOR 1996 & LATER*

Chrome plated with rubber inserts for super grip & comfort. Comes with throttle sleeve.

35-86 Fits 1" dia. handlebars 1996 & later. SOLD AS PAIR



D. *THROTTLE ASSEMBLIES FOR SINGLE/DUAL CABLE*

Single cable assemblies with adjuster knobs for 1973 thru 1980 H-D® models (OEM 56500-79).

35-36 Throttle assembly only. SOLD EACH
35-52 Throttle assembly with grips. SOLD AS PAIR

Dual cable assemblies with adjuster knobs for 1981 & later FL, FX, XL and most dual cable throttle applications (OEM 56395-81 & 56220-81B).

35-43 Throttle assembly only. SOLD EACH
35-65 Throttle assembly with grips. SOLD AS PAIR



E. *INTERNAL THROTTLE ASSEMBLY*

Designed to eliminate traditional throttle assemblies. Similar to early model throttles. This design allows you to run a single throttle cable through your handlebar and out of view. Requires cutting off the right end of the handlebar.

35-105 Internal throttle assembly for 1" dia. bars. SOLD EACH
35-106 Chrome piece to bridge the gap between internal throttle and switch housing.









ThreeBond

THROTTLE THUMBSCREWS

These throttle return adjusting screws fit H-D® stock throttle 1974 thru 1981, as well as our part No. **35-36** and **35-43** throttles. Replaces OEM 56397-74E.

35-54 Wheel type. SOLD EACH
35-69 OEM type.

THREEBOND GRIPLOCK

A high strength adhesive specially formulated to keep grips in place without damaging the rubber. Griplock puts an end to grips twisting or sliding off.

103-86 ThreeBond Griplock. SOLD EACH

A



B



C



D





E





F

CHROME
PLATED



A. HAND LEVER FITS BOTH BRAKE & CLUTCH

AS A BRAKE LEVER: Fits 1965 thru 1972 XLH & XLCH, 1971 & 1972 FX, and 1965 thru 1971 FL & FLH. OEM 45024-65A.
AS A CLUTCH LEVER: Fits 1965 thru 1981 FL, FLH, FX, FXE XLH, & XLCH. OEM 45024-65A.

47-22 Polished lever. SOLD EACH

B. CUSTOM HAND LEVERS FOR XL

Chrome plated, 4-Hole design, custom hand levers.

47-123 4-Hole hand lever, fits 07'-08' XL. SOLD AS SET

C. HAND LEVER FOR DISC BRAKE

Fits FL & FLH, 1972 thru 1981, and FX & FXE, 1973 thru 1981. Also fits Sportster® 1973 thru 1981. OEM 45016-72.

47-23 Polished lever. SOLD EACH

D. CLUTCH & BRAKE LEVER SET

Chrome, replacement lever set.

47-101 Clutch & brake lever set 07', chrome. SOLD AS SET

E. WIDE BLADE POWER GRIP LEVERS

These levers feature power leverage design and wide blade for a more comfortable grip.

47-178 1982 Thru 1995 brake lever. Chrome plated. OEM 45016-93. SOLD EACH
47-179 1982 & Later clutch lever. Chrome plated. OEM 45017-93.
47-180 1982 Thru 1995 brake lever. Polished.
47-181 1982 & Later clutch lever. Polished.
47-268 1996-2006 brake lever. Chrome plated. OEM 45016-96.

F. CUSTOM HAND LEVERS

These custom hand levers are cut out on the blade to complement our Predator mirrors found further in this section..

47-176 Cut-out brake lever for 1982 thru 1995. SOLD EACH
47-177 Cut-out clutch lever for 1982 & later.

CLUTCH LEVER & SWITCH HOUSINGS

A. 1972 THRU 1981

Clutch lever assembly complete with cable anchor pin. Fits FLH 1972 thru 1981, Sportster® & Super Glide® 1973 thru 1981. OEM 38608-73. SOLD EACH

47-111 Chrome plated.

Horizontal switch housing only. SOLD EACH

47-113 Chrome plated. OEM 71539-72.

Vertical switch housing only.

47-121 Chrome. OEM 71539-73B. SOLD EACH

Custom switch housing only, for use when you don't use stock switches. Fits H-D® models 1972 thru 1981, brake & clutch.

47-115 Chrome plated. SOLD EACH

B. 1982 THRU 1995

Clutch lever assembly complete with cable anchor pin. Fits Big Twin & Sportster® 1982 thru 1995.

47-171 Chrome plated. SOLD EACH

Clutch lever bracket and clamp.

47-165 Chrome plated. OEM 38608-82 and 45044-82. SOLD AS KIT

Handlebar master cylinder and clutch control clamp.

47-164 Chrome plated. Replaces OEM 45044-82. SOLD EACH

Handlebar switch housing. Fits 1982 thru 1995.

47-166 Right top, chrome plated. OEM 71564-82. SOLD EACH
47-167 Right bottom, chrome plated. OEM 71563-82. SOLD EACH
47-168 Left top, chrome plated. OEM 71567-82. SOLD EACH
47-169 Left bottom, chrome plated. OEM 71568-82A. SOLD EACH
47-170 Switch housing kit with tops and bottoms, chrome plated. Includes hardware. SOLD AS KIT

CLUTCH LEVER & SWITCH HOUSINGS

C. 1996 -2006

Chrome handlebar switch housings fits Softail®, Dyna Glide® and Sportster®, 1996 & later (except models with radio and cruise control). Mounting hardware included.

47-220 Left handlebar switch housings. Chrome plated. SOLD AS SET
47-221 Right handlebar switch housings. Chrome plated. SOLD AS SET
47-230 Complete kit, right & left housings. OEM 70222-96. Chrome plated. SOLD AS KIT
47-231 Clutch lever assembly complete with cable anchor pin. Fits Big Twin & Sportster®, 1996-2006. Chrome plated.
47-268 Brake lever for 1996-2006. OEM 45016-96. Chrome plated.
47-120 Five-Hole style brake & clutch lever for 1996-2006. OEM 45016-96. Chrome plated. SOLD AS SET

D. HANDLEBAR SWITCH HOUSING FLHT MODELS

47-234 Complete kit, right and left housings 1996-up standard, classic and 2006 FLHX Street Glide. Replaces OEM 70223-96. SOLD AS KIT
47-235 Complete kit, right and left housings, 1996-up FLTCU and FLHTCU/I 2002-up FLHR with cruise. Replaces OEM 70228-96A. SOLD AS KIT





SEE SECTION 14 FOR MIDWEST ACORN BUTTON HEAD ALLEN SCREWS, MIDWEST ACORN SMOOTH ALLEN SCREWS, COLONY ACORN & CAP SCREWS, & COLONY CHROME ALLEN SCREWS

A

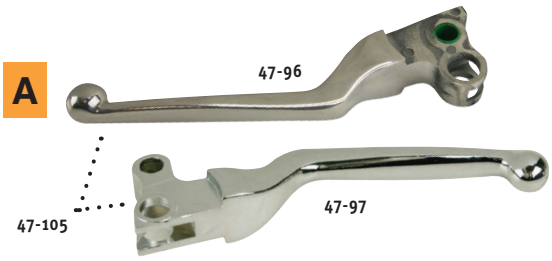

A. *HAND LEVERS FOR H-D® 1982 THRU 1992*

Fits all FXR, FXRS, XL & FL models 1982 thru 1992.

47-96 Brake lever.Polished. SOLD EACH

47-97 Clutch lever. Polished aluminum. Replaces OEM 45017-82. SOLD EACH

47-105 Complete set. Brake & clutch. Same application as above. Chrome plated. SOLD AS SET

B

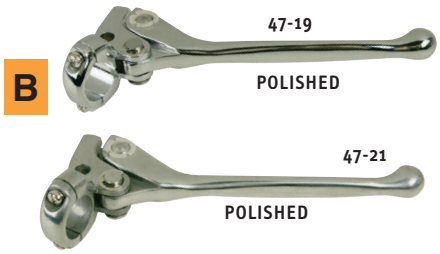

B. *EXACT DUPLICATES OF H-D® LEVERS*

Clutch & brake lever & bracket assembly with barrel.

OEM NO.	MODEL/YEAR	LEVER TYPE	DUPLICATE POLISHED	DUPLICATE CHROME
38604-65A	K Model 1952/1956.	Clutch	**47-19**	------
38604-65A	Sportster® 1957/1970.	Clutch	**47-19**	------
38609-68	Sportster® 1971 & later.	Clutch	**47-20**	**47-83**
45002-41	H-D® 74" 1941/1967.	Clutch	**47-21***	**47-82***
38609-68	H-D® 74" 1968/1972.	Clutch	**47-20**	**47-83**
45002-65A	Sportster® 1965/1972.	Brake	**47-21**	**47-82**
45002-65A	Big Twin 1965/1972.	Brake	**47-21**	**47-82**

*To use as a clutch lever reverse the pivot pin. ALL LEVERS SOLD EACH

C



C. *EXTRA SLOTTED BARREL FOR BARNETT LEVERS*

45-23 Cable fitting 7/16" O.D. SOLD EACH

D



D. *CLUTCH CABLE ADJUSTER COVER*

This die cast, chrome plated cover installs over clutch cable adjuster utilizing two snap rings allowing installation without the need to remove clutch cable.

45-40 Fits all Big Twin late 1987 & later and all Sportster® from 1988 & later. SOLD EACH

E

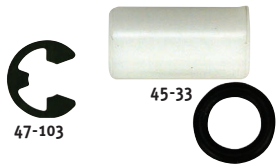

E. *CLUTCH & BRAKE LEVER BARREL BUSHING SETS AND RETAINING RING*

Eliminate premature cable failures at hand lever. Fits Sportster® XL & XLCH, both clutch & brake lever. Also fits Big Twins, clutch lever & brake lever when cables are used.

45-24 Bushing set for 1968 thru 1981. Nickel plated pin. OEM 45039-68 & 45038-68. SOLD AS SET

45-32 Bushing set for 1982 thru 1987 clutch lever. OEM 45036-82. SOLD AS SET

45-33 Bushing set for 1988 & later clutch lever; teflon pin for eyelet type clutch cable. SOLD AS SET

47-103 Steel retaining ring for 1965 thru 1981 OEM 11036. SOLD EACH

F



F. *CUSTOM FOOT SHIFT ARM BRACKET*

Custom application fits FL & FLH 1952 thru 1979 & FX 1971 thru 1973.

47-80 SOLD EACH

A. *SHIFT LEVERS*

A

47-150 Fits FL & FLH with splined shaft. Heel & toe. Chrome.
47-25 Fits 1974 thru 1985 thru-primary shift FX, 1986 & later Softail® (except Fat Boy® & Heritage models), and 1991 & later Dyna Glide®. Chrome. OEM 34564-74TA.
47-149 Fits FXWG 1981 thru 1986, and FL 1974 thru 1984. For splined shaft. Chrome. OEM 34606-74.
47-118 Fits FXR & FXRS 1982 & later. Chrome. OEM 34599-81.
47-182 Fits FLT 1984 & later. Heel only. OEM 33640-83.
47-183 Fits FLT 1984 & later. FLSTC Heritage, all years, 2 used, FLSTF Fat Boy®, all years, 2 used, FLSTN Nostalgia, all years, 2 used, OEM 33895-82.
47-117 Same application as above part No. **47-183**, except extended 2-1/4".
47-24 Fits Sportster® 1954 thru 1974 and 74" 1952 thru 1977. Without splines. Chrome. OEM 34606-54TA and 34606-71.
47-89 Fits Sportster® 1977 thru 1985. Chrome. OEM 34606-75.
47-162 Fits Sportster® 1991 & later. Chrome. OEM 34606-90.


47-150


47-25


47-24 & 47-149


47-118


47-182

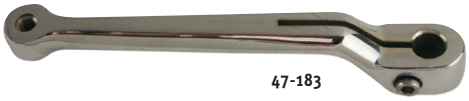
47-183

SOLD EACH


47-117


47-89


47-162

4

B. *SPORTSTER® BLACK SHIFT LEVER '91 & LATER*

47-163 Shift lever chrome, XL 1991-2003 Five Speed OEM 34606-90

B

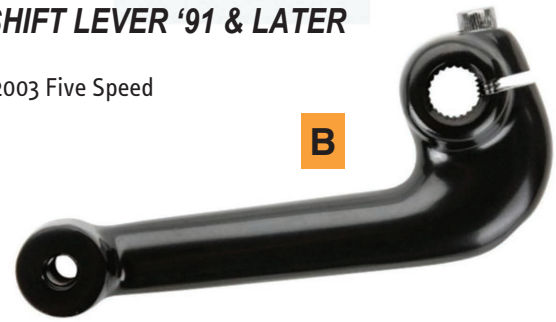

NEW!

C. *CLUTCH LEVER RODS AND END*

C

10-26 Clutch lever rod (Mousetrap). 22-3/4" long. OEM 36918-52. **SOLD EACH**
10-27 Clutch lever rod. Fits old style hand shift 1936 thru 1951 and suicide set up. 18" Long. OEM 36917-36.

CHROME PLATED



SHIFT CONTROL PARTS FOR BIG TWIN

ALL PARTS SOLD EACH EXCEPT AS NOTED

1	—	HEAVY GAUGE STEEL SHIFT LEVER BRACKET FL 1970 / 1984 COMPLETE W/BUSHING & ZERK FITTING INSTALLED. HAS ADDED SUPPORT PLATES — WON'T CRACK FROM VIBRATION (OEM 33630-70)
2	—	SHIFT LEVER W/O SPLINES 1954 / 1979. CHROME (OEM 33660-54)
3	**47-102**	RET. RING 1965 / 1973 **U.S.A. MADE** (OEM 11031)
4	—	GEAR SHIFTER ROD END 1937 & LATER W/HAND SHIFT, 1951 / 1965 W/FOOT SHIFT. CHROME (OEM 33870-51)
5	—	SHOULDER BOLT 1937 & LATER W/HAND SHIFT, 1951 / 1964 W/FOOT SHIFT. CHROME (OEM 33878-51)
6	**10-35**	GEAR SHIFTER LINKAGE KIT FX 1971 / 1973, FXWG 1980 & LATER, FL & FLH 1952 & LATER W/FOOT SHIFT. INCLUDES GEAR SHIFTER, ROD END, SHOULDER BOLT & LOCKNUT, SHIFTER ROD & CLEVIS. CHROME. SOLD AS COMPLETE KIT

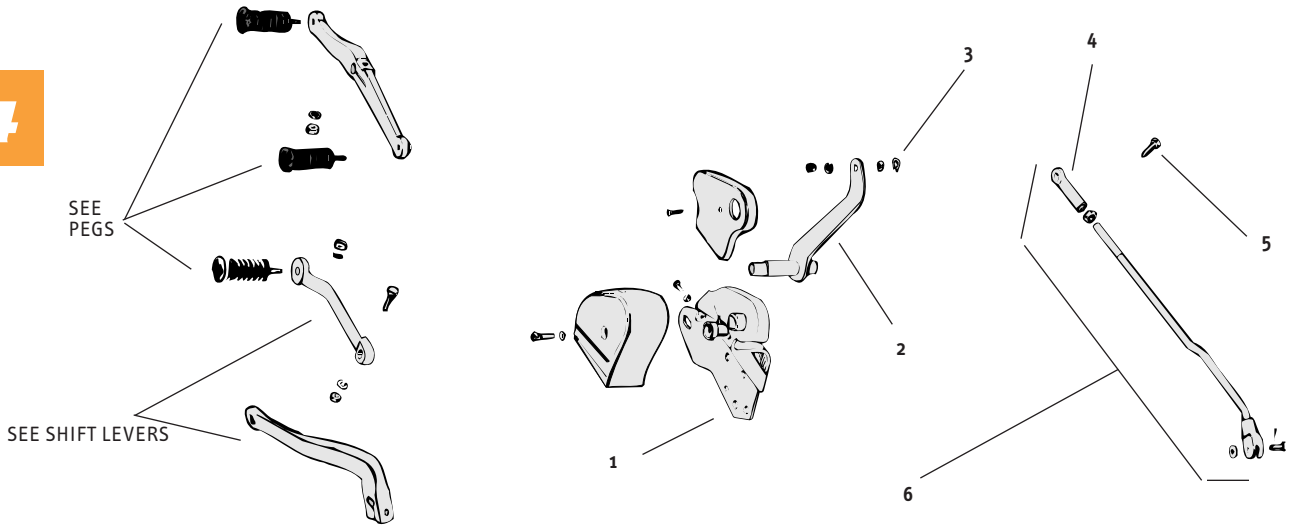

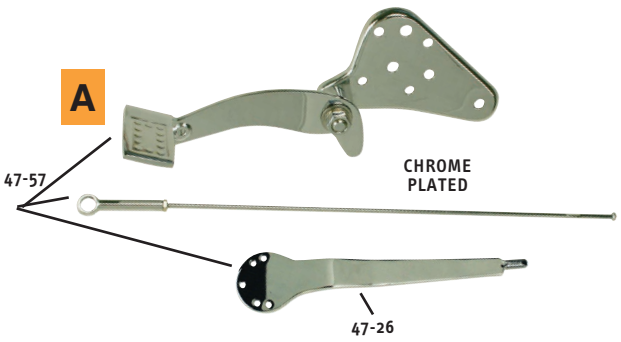





A. JOCKEY SHIFTER CONVERSION KIT

Converts foot shift model H-D® to hand shift.

47-57	Complete kit.	SOLD AS KIT
47-26	Lever only. Use with foot shift lid.	SOLD EACH

B. ULTIMA® POLISHED STAINLESS STEEL SHIFT RODS

These **Ultima**® shift linkages are **U.S.A. MADE** from stainless steel then fully polished. Available in several lengths for stock and extended forward controls. SOLD EACH

10-56	Ultima® shift rod, 12-1/8" eye to eye with 5/16" rod ends.
10-57	Ultima® shift rod, 14-1/8" eye to eye with 5/16" rod ends.
10-62	Ultima® shift rod, 15-1/4" eye to eye with 5/16" rod ends.
10-64	Ultima® shift rod, 17-1/4" eye to eye with 5/16" rod ends.

C. SOFTAIL® SHIFTER LINKAGE

Fits all Softail® models 1986 & later. Replaces OEM 11729 rod, OEM 33871-85 swivel end, and OEM 33729-82 ball joint. Also includes two jam nuts. Chrome plated. Rod measures 10-3/4" long.

10-2	Complete shifter linkage for Softail®; chrome plated.	SOLD AS KIT
10-60	Ball joint with stud. Replaces OEM 33729-82.	SOLD EACH
10-61	Swivel end. Replaces OEM 33871-85.	SOLD EACH

A. *CUSTOM HEEL-TOE SHIFT LEVER FOR DYNA MODELS*

The new custom heel-toe shift levers for Dyna models are made from forged aluminum and beautifully finished in chrome or black. Fits: FXD 99-18 models with Mid-controls. Shift pegs are not included.



A

47-52 Chrome Heel-toe shift lever '99-'18 FXD

NEW!



4

ULTIMA

B. *ULTIMA® "FAT LINK" SHIFT ROD*

Easy adjustment, "no need to remove." Anti-vibration 4130 alloy steel rod ends. Hardware included. Rods are 6061 aluminum w/chrome or black finish. "That's what I'm talkin' about!" Cool stuff.

"Fat Link"-15.6mm diameter. SOLD EACH

10-3 For Softail® & FL models. 12-1/8" Rod (eye to eye).
10-4 For Dyna Wide Glide®, custom & extended controls. 14" Rod (eye to eye).



"FAT LINK"

B



SUPER "FAT LINK"

Super "Fat Link"-19.2mm diameter.

10-14 For Softail® & FL models, black. 12-1/8" Rod (eye to eye)
10-7 For V-Rod.
10-15 For Sportster® XL custom 08', plain.
10-84 For Victory Kingpin 07'-08' & Vision 08', plain.
10-85 For Victory 07'-08', Hammer, Vegas & Ness Bike, plain.
10-86 For Victory Kingpin 07'-08' & Vision 08', black.
10-87 For Victory 07'-08', Hammer, Vegas & Ness Bike, black.
10-88 For FX/FL, wrinkle black.
10-10 For Roadliner & Stratoliner, plain.
10-11 For Roadliner & Stratoliner, Ultima® engraved.
10-9 For Yamaha Warrior & Roadstar, Ultima® engraved.



10-9



10-10 & 10-11

C. *SHIFT ROD ENDS*

C

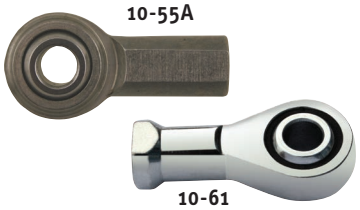

10-60 Ball joint with stud. Replaces OEM 33729-82. SOLD EACH
10-55A Stainless rod end, 5/16-24 thread. SOLD EACH
10-61 Swivel end. Chrome. Replaces OEM 33871-85. SOLD EACH



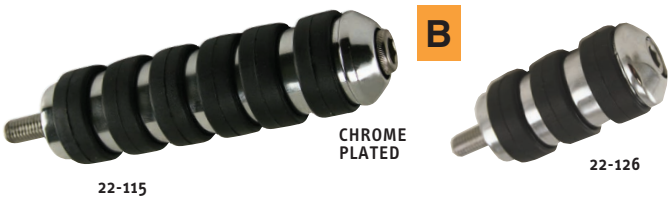

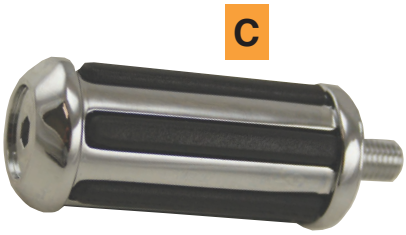

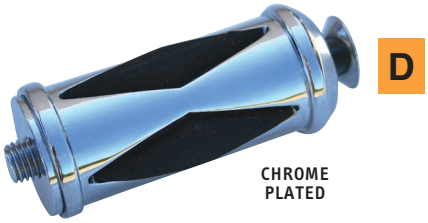











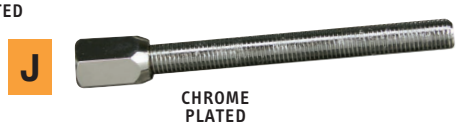

A. *O-RING FOOT SHIFT PEG*

22-80 Fixed foot shift peg. SOLD EACH

B. *SPLIT RUBBER ANTI-VIBE SHIFT PEGS*

Anti-vibration style shifter toe peg fits all H-D® models. 5/16-24 Mounting bolt.

22-126 3 Band shift peg. SOLD EACH

22-115 Extended 6 band shift peg. Can be used on shift or brake side.

C. *RAIL STYLE SHIFT PEG*

This peg looks good in any position due to its unique design. Rubber rails run lengthwise and go around the peg. The rubber comes from the inside out — it is not glued or pressed on from the outside. No chance of coming loose. Die cast and chrome plated.

22-139 Shift peg. SOLD EACH

D. *DIAMOND SHIFT PEG*

Diamond style pegs and shifter are the same high quality as our rail style pegs. Interchangeable mounting ends. Chrome plating is top notch for show-winning appeal.

22-151 Shift peg. SOLD EACH

See Sec. 2 for foot pegs. See Section 4 for grips and for brake pedal pads.

E. *FOOT SHIFT PEGS*

22-45 Black rubber foot shift peg. OEM 34609-52 and 34611-65. SOLD EACH

F. *FOOT SHIFT PEG*

Zinc die cast & chrome plated with black ribbed rubber. Beautifully made.

22-107 Fits all H-D® threaded shift levers. OEM 34611-65. SOLD EACH

G *CLUTCH CABLE MOUNTING BRACKET*

47-109 For FL & FLH 1965 thru early 1979 and FX 1971 thru early 1979. OEM 62576-65A. SOLD EACH

H. *MOUSETRAP ELIMINATOR BRACKET*

This one really works. No interference with oil tank or stock parts.

47-55 Bracket permits use of late style 74" clutch cable on early models. SOLD EACH

I. *MOUSETRAP SPRING COVER*

Precision made facsimile of H-D® part. OEM 38495-58.

89-213 Cover. SOLD EACH

J. *FRONT BRAKE ADJUSTING SCREW*

Exact duplicate of original part. OEM 45159-50.

90-232 For FL & FLH 1959 thru 1971, Sportster® 1954 thru 1972 and Super Glide® 1971 thru 1972. SOLD EACH

A. *CLUTCH RELEASE ARMS*

Custom clutch release arms for late model 74" & 80" and early mouse-trap and foot clutch models.

47-60 For 1936 thru 1967. OEM 37051-36. SOLD EACH
47-56 For 1968 thru early 1979. OEM 37053-68. Will work with stock or custom frame.
47-108 For FL late 1979 thru 1982 and FX late 1979 thru 1981. OEM 37054-79.

This forged arm and die cast bracket set for H-D® 5 speeds replaces all OEM clutch release arms used 1980 thru 1986.

47-157 Clutch release set replaces OEM 37085-80, 37094-82, 37096-83 & 37096-85. SOLD AS SET

A




47-56


47-108

B. *BIG TWIN HYDRAULIC LEVER SETS*

Fits touring models 99'-04'/Softail®, Dyna® 2000 & up that have been converted to hydraulic clutches.

47-501 Brake and clutch lever set, chrome. Replaces OEM 46114-02. SOLD AS KIT
47-502 Hydraulic clutch lever only, chrome. SOLD EACH

B



4

C. *ULTIMA® HANDLEBAR CONTROL KITS*

47-700 For '96-'12, 9/16" Bore master cylinder, **Black**
47-701 For Touring, 2014 - Later, hydraulic brake, 11/16" Bore master cylinder, 15mm Bore throttle, Chrome
47-702 For Touring w/ Radio, '08-'13, 15mm Bore master cylinder, Chrome
47-703 For Touring w/ Radio,Cruise Control, '08-'13, 15mm Bore master cylinder, Chrome
47-704 For Touring w/ Radio, '96-'07, 11/16" Bore master cylinder, Chrome
47-705 For Touring w/ Radio,Cruise Control, '96-'07, 11/16" Bore master cylinder, Chrome
47-706 For '82-'95, 5/8" Bore master cylinder, Chrome
47-707 For '82-'95, 3/4" Bore master cylinder, Chrome
47-708 For '07-Later Softail® & Dyna®, 9/16" Bore master cylinder, Chrome

C

NEW!


47-700


47-703


47-701


47-708


47-707



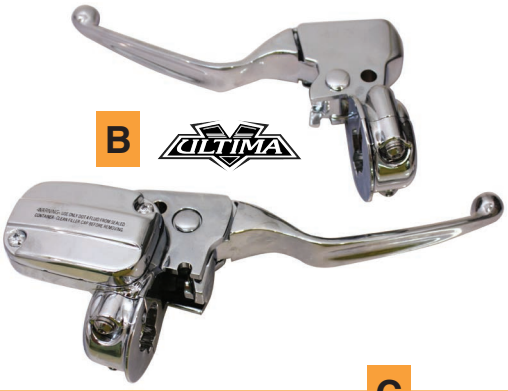







A. *ULTIMA® HANDLEBAR CONTROL KITS 1996 THRU 2004*

Fits Big Twin and Sportster®, 1996 & later (except FLT and FXRT with radio controls). SOLD AS KIT

47-256 For single disc models. 9/16" Bore master cylinder.
47-257 For single disc models. 5/8" Bore master cylinder.
47-299 For dual disc models. 11/16" Bore master cylinder.

B. *FLT HANDLEBAR CONTROL KITS*

With 15mm bore brake master cylinder, fi ts 2008-2010 FLT dual disc models. SOLD AS KIT

47-258 Without switch housing
47-259 With radio control switch housing
47-260 With radio & cruise control switch housing

C. *HANDLEBAR CONTROL KITS*

Chrome plated handlebar control kits available with or without handlebar switched and wiring harness. Fits FL models 1972 thru 1981, and FX & Sportster®, 1973 thru 1981. SOLD AS KIT

47-201 Kit including master cylinder, clutch lever assembly, handlebar switches, and wiring harness.
47-202 Kit including master cylinder and clutch lever assembly only.

D. *HANDLEBAR CONTROL KITS FOR SPORTSTER®*

2007 XL HANDLE BAR CONTROL KITS SOLD AS KIT

47-106 Kit includes 9/16" bore master cylinder w/switch housings.
47-126 Kit includes 1/2" bore master cylinder w/switch housings.

2004-2006 XL HANDLE BAR CONTROL KITS SOLD AS KIT

47-127 Kit includes 9/16" bore master cylinder w/switch housings.
47-130 Kit includes 1/2" bore master cylinder w/switch housings.

E. *HYDRAULIC CLUTCH HANDLEBAR CONTROL KIT*

These custom handlebar control kits are supplied complete with all parts and instructions required to make an easy hydraulic clutch conversion. These kits make the clutch operation much easier to operate than cable clutch systems and give any bike a great custom look, available in black or chrome finish. Instructions are included.

1987-1999 EVO & 1999-PRESENT BIG TWINS

47-243 Black hydraulic clutch handlebar control kit. SOLD AS KIT

47-243

A. *HANDLEBAR CONTROL KITS*
1982 thru 1995

Chrome plated handlebar control kits include master cylinder, clutch lever assembly, switch housings, clamps, and chrome hardware. Kits accept stock OEM control switches and wiring of our replacement switches found in catalog Section 1.

Fits Big Twin and Sportster®, 1982 thru 1995 (except FLT and FXRT with radio).

47-195 For dual disc models. 3/4" Bore master cylinder. SOLD AS KIT
47-196 For single disc models. 5/8" Bore master cylinder.
47-197 For dual disc models. 11/16" Bore master cylinder.

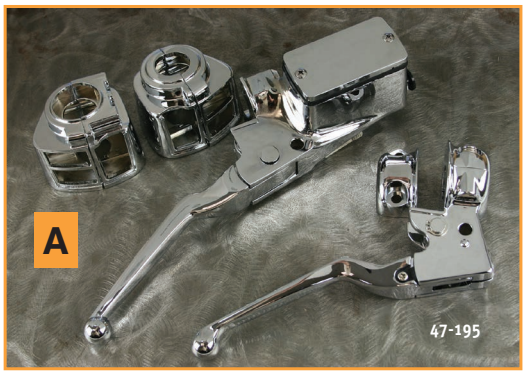



B. *HANDLEBAR WIRING HARNESS FOR BIG TWIN CUSTOMS*

Handlebar switch wiring harness kits fit custom Big Twin models 1982 & later. Harness is 48" long with color coded wires and c Switches are attached for both right and left sides. SOLD AS KIT

18-231 Harness with chrome switches for 1982 thru 1995 Big Twin and 1982 thru 1995 Sportster®.
18-230 Harness with black switches for 1982 thru 1995 Big Twin and 1982 thru 1995 Sportster®.
18-331 Harness with chrome switches for 1996 & later Big Twin and 1996 & later Sportster®.
18-332 Harness with black switches for 1996 & later Big Twin and 1996 & later Sportster®.


18-230



18-332

C. *JAYBRAKE REPLACEMENT PARTS*

JAYBRAKE LEVERS FOR STOCK H-D® CONTROLS

Use with stock H-D® control perch and uses stock pivot and cable pins. Solid style levers to match other JayBrake controls. SOLD EACH

POLISHED PART NO.	DESCRIPTION	CHROME PLATED PART NO.
47-366	1982 thru 1995 Brake lever	**47-369**
47-367	1996 & later Brake lever	**47-370**
-------	1982 & later Clutch lever	**47-371**

HEADLIGHT RELAY

NOTE: This part is **REQUIRED** for proper headlight high/low operation on all JayBrake handlebar controls with switches (shown on previous page). This is not a JayBrake product.

17-116 Headlight relay. SOLD EACH





17-116

D. *HANDLEBAR MASTER CYLINDER COVER KIT*

Kit includes master cylinder cover, clamps, clutch bracket, and hardware.

47-415 Fits Big Twin 96"-up, Sportster® 96'-03' with Single Disc brake only. Replaces OEM 46098-98.

For complete "all chrome" handlebar controls add the following:

PART NO.	DESCRIPTION	OEM NO.
47-268	Brake lever	45016-96
47-230	Switch housings	70222-96

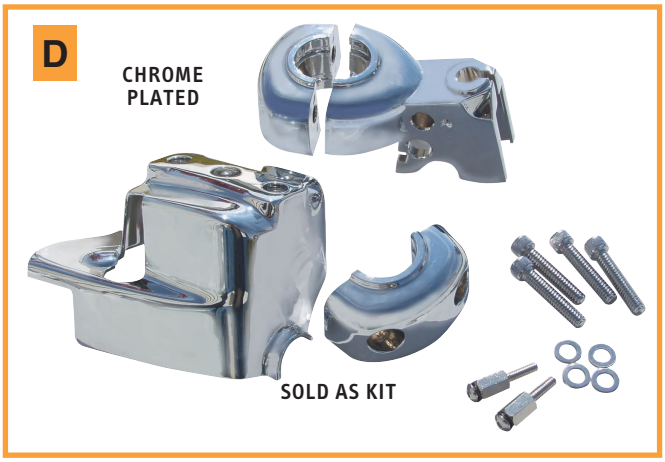

A



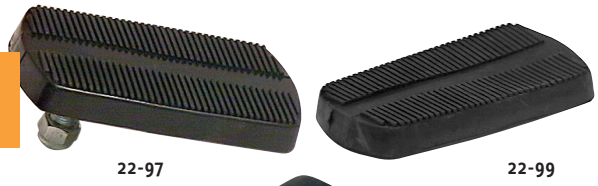

B



C

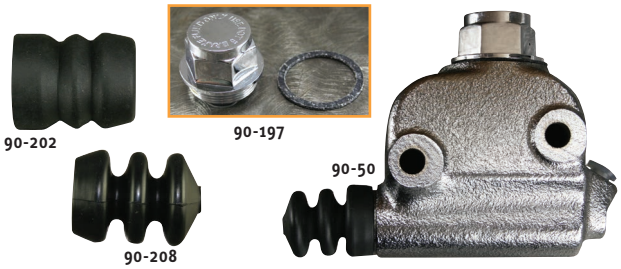

D



E









A. *REAR BRAKE PEDAL PADS — RAIL AND DIAMOND STYLE*

The first matching pads for all those rail and diamond pegs and grips that have been sold over the past several years. Excellent casting and bright chrome plating with black rubber inserts that match the grips & pegs. Find matching grips in this section. See Section 2 for matching foot pegs & shifter pegs.

22-165 Rail style brake pedal pad. SOLD EACH
22-167 Diamond style brake pedal pad.
Replacement rubbers only.
22-166 Rail style rubber. SOLD EACH
22-168 Diamond style rubber.

B. *REAR BRAKE PEDAL PADS*

22-97 Brake pedal pad kit with black rubber pad for 1965 & later. Replaces OEM 36956-65A. SOLD AS KIT
22-99 Replacement black rubber only. OEM 36964-67. SOLD EACH
22-53 Black brake rubber for all models FL & FLH. OEM 36954-62. SOLD EACH
22-88 Brake rubber for all models Super Glide®. OEM 42394-65. SOLD EACH
22-111 Black rubber pad & stud. Fits FXWG 1983 & 1984, FXST 1984, and FLHS-80 1983. OEM 42532-82. SOLD EACH

C. *BIG TWIN REAR MASTER CYLINDERS*

Complete master cylinder assembly. Fits hydraulic drum brake applications on FL 1958 thru 1972 and FX 1971 & 1972. May also be used for rear disc brake applications on FL & FX, 1973 thru early 1979 if the residual pressure check valve (rubber coated washer) is removed.

90-50 Painted silver master cylinder. OEM 41761-58. SOLD EACH
90-196 Chrome plated master cylinder.
90-197 Cap for 1958 thru 1979. OEM 41765-58. Chrome.
90-208 Dust boot for 1958 thru 1969. OEM 41764-58.
90-202 Dust boot for 1970 thru 1979. OEM 41764-70.

D. *KELSEY TYPE MASTER CYLINDER*

90-293 Kelsey type master cylinder. Works with most H-D® 1980 & later. Replaces OEM 42453-80A & 42454-80A. Chrome plated. SOLD EACH

E. *REAR MASTER CYLINDERS*

90-153 Fits 08'-10' FLT, chrome. OEM 41763-08. SOLD EACH
90-155 Fits 99'-07' FLT, 00'-07' Softail®, chrome. OEM 41755-99A.
90-156 Fits 97'-98' FLT, chrome. OEM 41755-97.
90-157 Fits 95'-96' FLT, chrome. OEM 41755-95.
90-158 Fits 92'-94' FLT, chrome. OEM 41755-92A.

F. *REBUILD KIT FOR BILLET ALUMINUM MASTER CYLINDERS*

Rebuild kit for billet aluminum master cylinders (pictured).
90-239 Rebuild kit for master cylinder.
90-202 Replacement dust boot.

F

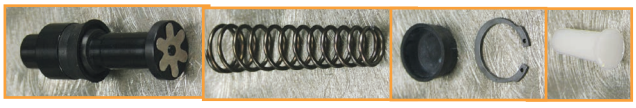

MASTER CYLINDER REBUILD KITS

HANDLEBAR MASTER CYLINDER KITS

A. For H-D® handlebar master cylinders 1972 thru 1981. Fits both OEM and our part No. **90-224** master cylinder.

90-151 Rebuild kit. OEM 45063-72. SOLD AS KIT
78-147 Master cylinder cover gasket for above described master cylinders. OEM 45012-72. SOLD EACH

B. For H-D® handlebar master cylinders on all 1982 & 1983 models and on 1984 FLH with .750" (3/4") diameter piston. Fits OEM and our master cylinder.

90-240 Rebuild kit. OEM 45063-82. This kit includes master cylinder cover gasket, OEM 45012-82. SOLD AS KIT

C. For handlebar master cylinders on FXR/S/LR 1987 thru 1993, Softail® all models 1987 thru 1993, FXDB-S 1991, FXDWG 1993, and Sportster® all models 1986 thru 1993.

90-413 Rebuild kit. OEM 45072-87. 5/8" Dia. piston. SOLD AS KIT

D. For handlebar master cylinders on FLT all models 1987 thru 1993, FXRT, FXRS/SP/CON 1987 thru 1992, Dyna Glide® all models 1992, and FXDL 1993.

90-426 Rebuild kit. OEM 45006-87A 11/16" Dia. piston.. SOLD AS KIT

E. For handlebar master cylinders on Big Twin & Sportster®, all models 1996 & later.

90-524 Rebuild kit for single disc brake. OEM 45006-96. 9/16" Dia. piston. SOLD AS KIT
90-525 Rebuild kit for dual disc brake. OEM 45072-96. 11/16" Dia. piston.

REAR MASTER CYLINDER KITS

F. For rear master cylinders on H-D® Big Twin 1958 thru 1979.

90-58 Rebuild kit. OEM 41762-58A. SOLD AS KIT

G. For rear master cylinders on FL late 1979 thru 1984, FX late 1979 thru 1983, FLT & FLHT, 1980 thru 1985, and Sportster® 1979 thru 1981.

90-152 Rebuild kit. OEM 42374-77B. SOLD AS KIT

H. For rear master cylinders on FX 1983 thru 1986, Softail® 1984 thru early 1987, and Sportster® 1982 thru early 1987.

90-239 Rebuild kit. OEM 42374-82A. SOLD AS KIT

I. For rear master cylinders on FXR 1982 thru early 1987.

90-429 Rebuild kit. OEM 42382-82B. SOLD AS KIT

J. For rear master cylinders on FLT models 1986 thru 1992.

90-430 Rebuild kit. OEM 42374-86. SOLD AS KIT

K. For rear master cylinders on FXR all models late 1987 and later, Softail® all models late 1987 and later, FLT all models 1992 and later, Dyna Glide® all models 1993 and later, and Sportster® all models late 1987 and later.

90-424 Rebuild kit. OEM 42382-87A. SOLD AS KIT

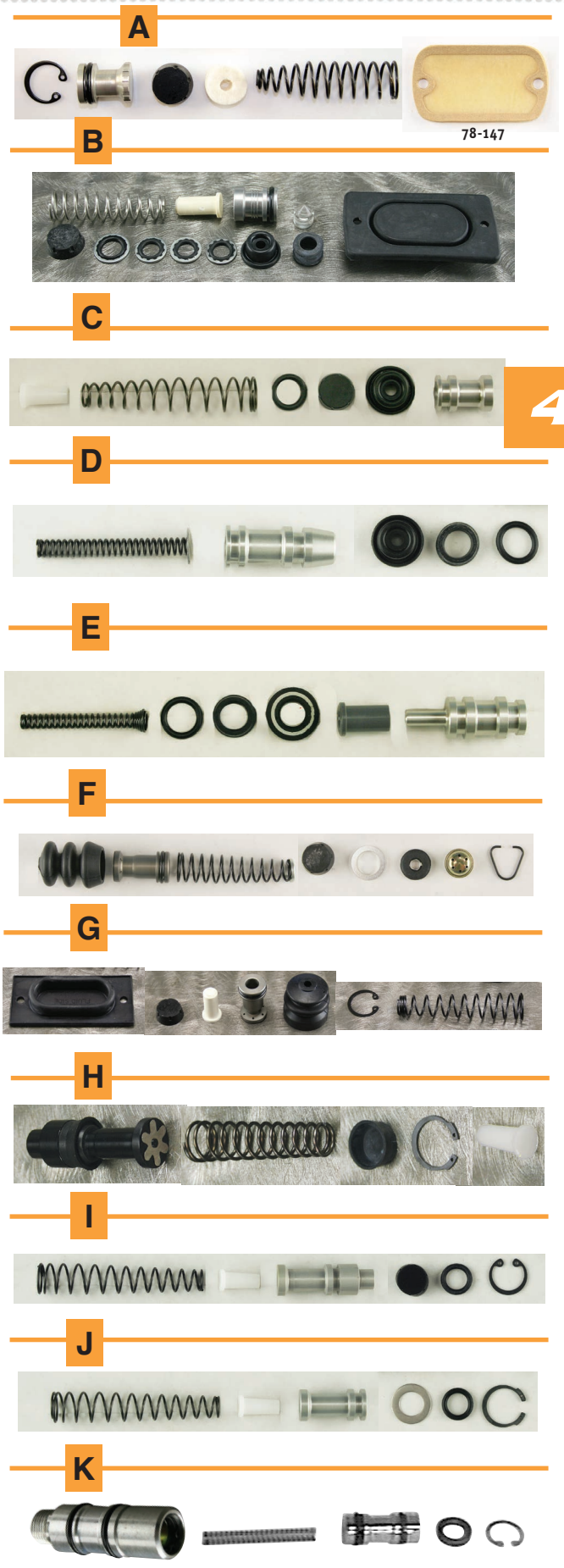

FRONT BRAKE CONTROLS FOR BIG TWIN & SPORTSTER® 1996

ALL PARTS SOLD EACH EXCEPT AS NOTED

1	**90-211**	SIGHT GLASS ONLY (OEM 45042-96)
2	**78-219**	GASKET (OEM 45005-96)
3	**47-253**	BRAKE & CLUTCH CLAMP. CHROME (OEM 45044-96)
4	**90-524**	REBUILD KIT SINGLE DISC, 9/16" DIA. PISTON (OEM 45006-96)
	90-525	REBUILD KIT DUAL DISC, 11/16" DIA. PISTON (OEM 45072-96)
5	**90-209**	TOP COVER ONLY (OEM 45004-96)
6	**90-378**	BANJO BOLT. CHROME. INCLUDES TWO CRUSH WASHERS **U.S.A. MADE** (OEM 41739-84A)
7	**90-432**	12MM O-RING WASHER (OEM 41733-88)
8	**45-34**	PIVOT PIN & RET. RING (OEM 45032-82 & 11143)
9		**COMPLETE MASTER CYLINDER ASSY.** WITH HAND LEVER, HANDLEBAR CLAMP NOT INCLUDED. SEE BANJO BOLTS NEAR END OF THIS SECTION.
	90-522	.687 — 11/16" BORE FOR DUAL DISC (OEM 45013-96)
	90-523	.5625 — 9/16" BORE FOR SINGLE DISC (OEM 45019-96)

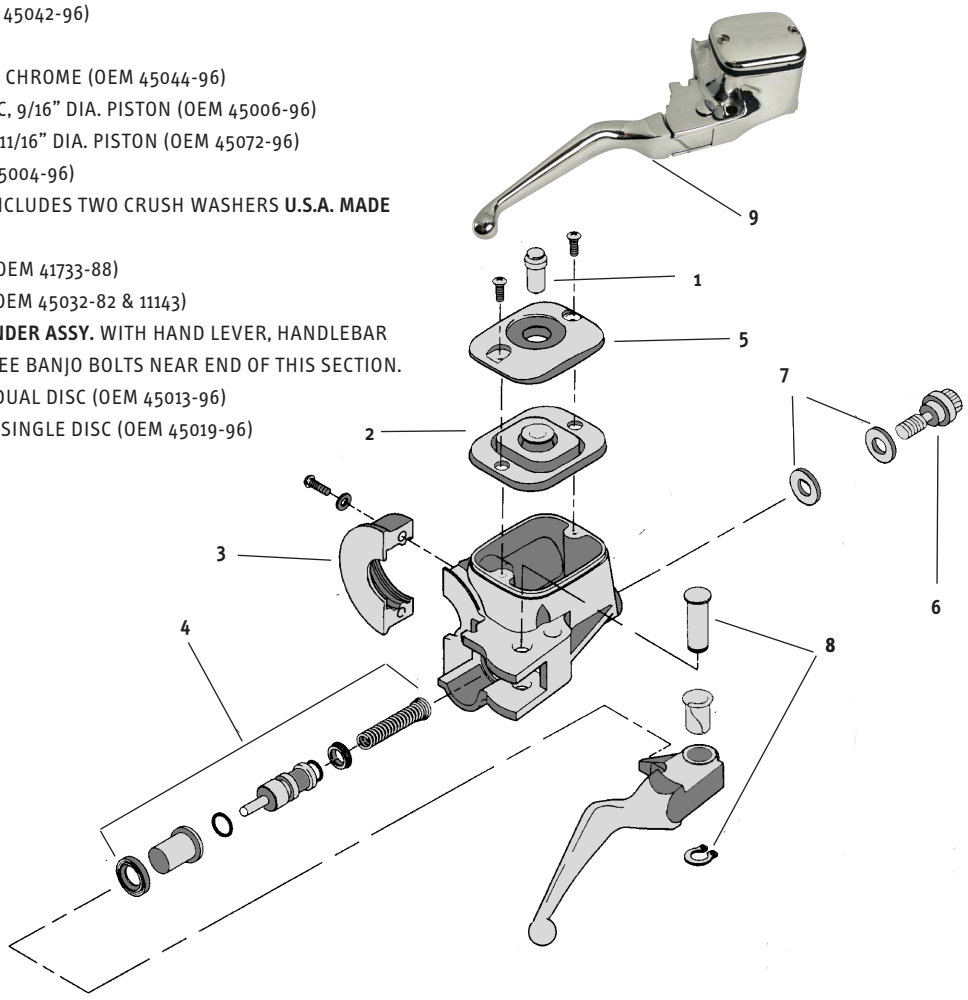



MASTER CYLINDER CAPS for 1996 & LATER

Chrome master cylinder tops without sight glass. Fits all models Big Twin and Sportster®, 1996 & later. You must use our gasket part No. **78-218** because this custom cover eliminates the sight glass so the old gasket cannot be reused. SOLD EACH

78-218 Gasket for use on custom covers where sight glass is not used.

Stock type master cylinder top cover with sight glass for all models Big Twin and Sportster®, 1996 & later.

90-209 Chrome top cover only with DOT 5 decal. OEM 45004-96. **NOTE:** must order gasket and sight glass separately. SOLD EACH

78-219 Gasket for cover with sight glass. OEM 45005-96.

90-211 Sight glass only. OEM 45042-96.

FRONT BRAKE CONTROL PARTS FOR H-D® 1972 THRU 1981

ALL PARTS SOLD EACH EXCEPT AS NOTED

1	**90-165**	MASTER CYLINDER COVER 1972 / 1981. CHROME (OEM 45057-72)
2	**78-147**	MASTER CYLINDER COVER GASKET 1973 / 1981 (OEM 45012-72)
3	**90-422**	SPRING ONLY (OEM 45061-72A)
4	**90-151**	REBUILD KIT FOR OEM & PART NO. **90-224** HANDLEBAR MASTER CYLINDERS (OEM 45063-72)
5	**47-115**	CUSTOM SWITCH HOUSING USED WHEN NOT USING STOCK SWITCHES. FITS BRAKE & CLUTCH ALL H-D® 1972 / 1981. CHROME
6	**47-23**	POLISHED HAND LEVER FOR DISC BRAKE. FITS FL & FLH, 1972 THRU 1981, AND FX & FXE, 1973 THRU 1981. ALSO FITS SPORTSTER® 1973 THRU 1981. OEM 45016-72.
	--------	CHROME HAND LEVER FOR DISC BRAKE. FITS FL & FLH, 1972 THRU 1981, AND FX & FXE, 1973 THRU 1981. ALSO FITS SPORTSTER® 1973 THRU 1981. OEM 45016-72.
7	**90-329**	HANDLEBAR MASTER CYLINDER FITTING 1971 / 1981 W/90° RIGHT ANGLE INVERTED FLARE, MALE END, 1/8" PIPE THREAD **U.S.A. MADE** (OEM 43307-78)
	90-353	HANDLEBAR MASTER CYLINDER FITTING STRAIGHT INVERTED FLARE, MALE END, 1/8" PIPE THREAD **U.S.A. MADE** (OEM 63609-72)
8	**90-224**	COMPLETE MASTER CYLINDER ASSY. W/HAND LEVER. CHROME (OEM 45010-73)

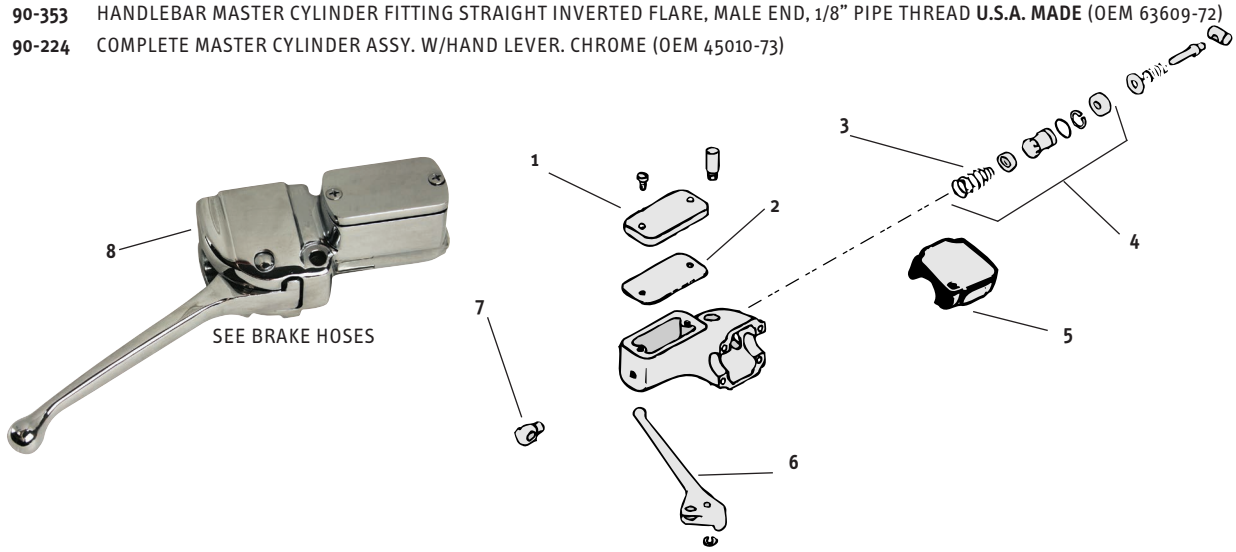

FRONT BRAKE CONTROLS FOR BIG TWIN & SPORTSTER® 1982 THRU 1995

ALL PARTS SOLD EACH EXCEPT AS NOTED

1	**90-435**	COVER LATE 1985 / 1995. CHROME (OEM 45004-85) ALSO FOR PART NO. **90-409** & **90-425** HANDLEBAR MASTER CYLINDERS
2	**78-182**	MASTER CYLINDER COVER GASKET 1982 / EARLY 1985 (OEM 45012-82)
	78-200	MASTER CYLINDER COVER GASKET LATE 1985 / 1995 (OEM 45005-85) ALSO FOR PART NO. **90-409** & **90-425** MASTER CYLINDERS
3	**47-164**	CHROME CLAMP. ALSO FITS CLUTCH CONTROL SIDE (OEM 45044-82)
4	**90-240**	REBUILD KIT FOR OEM W/.750" DIA. PISTON & HANDLEBAR MASTER CYLINDERS (OEM 45063-82)
5	**45-34**	PIVOT PIN & RET. RING (OEM 45032-82 & 11143)
6	**47-178**	CHROME PLATED 1982 THRU 1995 BRAKE LEVER. OEM 45016-93.
7		**COMPLETE MASTER CYLINDER ASSY.** WITH HAND LEVER. CHROME. HANDLEBAR CLAMP NOT INCLUDED. BANJO BOLTS NEAR END OF THIS SECTION.
	90-409	.625 — 5/8" BORE (OEM 45019-85) USES 12MM BANJO BOLTS
	90-425	.687 — 11/16" BORE (OEM 45013-85) USES 12MM BANJO BOLTS



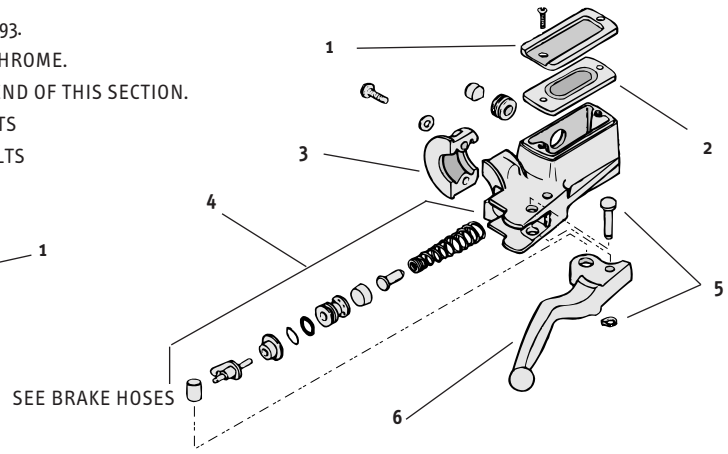

*** A Little bit about bore size:**
Large bore: Less line pressure, more squeeze to work caliper, less travel, giving a more solid feeling to the brake. Moves more fluid.
Small bore: Higher line pressure, less squeeze to work caliper. More travel on lever with small bore; moves less fluid.
Recommend: larger bore for dual disc, small bore for single disc, but ultimately it is your choice of feel.

REAR BRAKE PARTS FOR BIG TWIN

ALL PARTS SOLD EACH EXCEPT AS NOTED

1	**78-187**	MASTER CYLINDER COVER GASKET FITS MOST REAR & REMOTE RESERVOIRS 1977 & LATER: FL REAR LATE 1979 / 1984. FX REAR LATE 1979 / 1982, ALL BIG TWIN REAR REMOTE 1982 & LATER, SPORTSTER® REAR 1977 / 1981 (OEM 42455-80)
2	**17-43**	STOPLIGHT SWITCH SCREW TYPE TERMINAL FL & FLH 1958 / 1970. ACCEL (OEM 72002-51)
	17-44	STOPLIGHT SWITCH FLAT TYPE TERMINAL FL & FLH 1971 / 1980, FX & FXE 1971 & 1972, FX & FXE 1978 / 1980, FLT 1980. ACCEL (OEM 72023-51)
3	—	MASTER CYLINDER BRACKET FX LATE 1972 / EARLY 1979 (OEM 42299-72)
4	**22-99**	BRAKE PEDAL PAD RUBBER ONLY (OEM 36964-67)
5	—	FOOT BRAKE LEVER ALL MODEL SUPER GLIDE® LATE 1972 / EARLY 1978. CHROME (OEM 42399-72A)
6	**22-88**	FOOT BRAKE LEVER RUBBER ONLY, ALL MODEL SUPER GLIDE® (OEM 42394-65)
7	**22-53**	BRAKE RUBBER ONLY, ALL MODEL FL & FLH. BLACK (OEM 42394-62)
8	**90-167**	STOP PLATE 1970 / 1979 (OEM 44211-70)
9	—	CHROME PEDAL FLH 1958 / 1969
	—	CHROME PEDAL FLH 1970 / 1979
10	—	CHROME BACKING PLATE FLH 1958 / 1969
	47-72	CHROME BACKING PLATE FLH 1970 / 1979
11	**90-170**	CHROME BACKING PLATE SPRING ALL MODELS 1958 & LATER W/ANY MASTER CYLINDER (OEM 42427-58 & 41835-69)
12	**22-97**	BRAKE PEDAL PAD KIT W/BLACK RUBBER 1965 & LATER (OEM 36956-65A)
13	**90-293**	KELSEY TYPE MASTER CYLINDER MOST H-D® 1980 & LATER. CHROME (OEM 42453-80A & 42454-80A)
14	**90-107**	PLUNGER & CLEVIS 1958 / 1969 (OEM 41770-58)
	90-166	PLUNGER & CLEVIS 1970 / 1979 (OEM 42333-70)
15	**90-208**	BOOT 1958 / 1969 (OEM 41764-58)
	90-202	BOOT 1970 / 1979 (OEM 41764-70)
16	**90-197**	MASTER CYLINDER CAP 1958 / 1979 (OEM 41765-70)
17	—	MASTER CYLINDER CAP WASHER 1958 / 1979 **U.S.A. MADE** (OEM 41766-58)
18	**90-50**	COMPLETE MASTER CYLINDER ASSY. SILVER PAINTED (OEM 41761-58)
	90-196	COMPLETE MASTER CYLINDER ASSY. CHROME (OEM 41761-58)
19	**89-201**	REAR MASTER CYLINDER COVER 1958 / EARLY 1979. CHROME (OEM 41737-63)

REAR BRAKE PARTS FOR BIG TWIN

ALL PARTS SOLD EACH EXCEPT AS NOTED

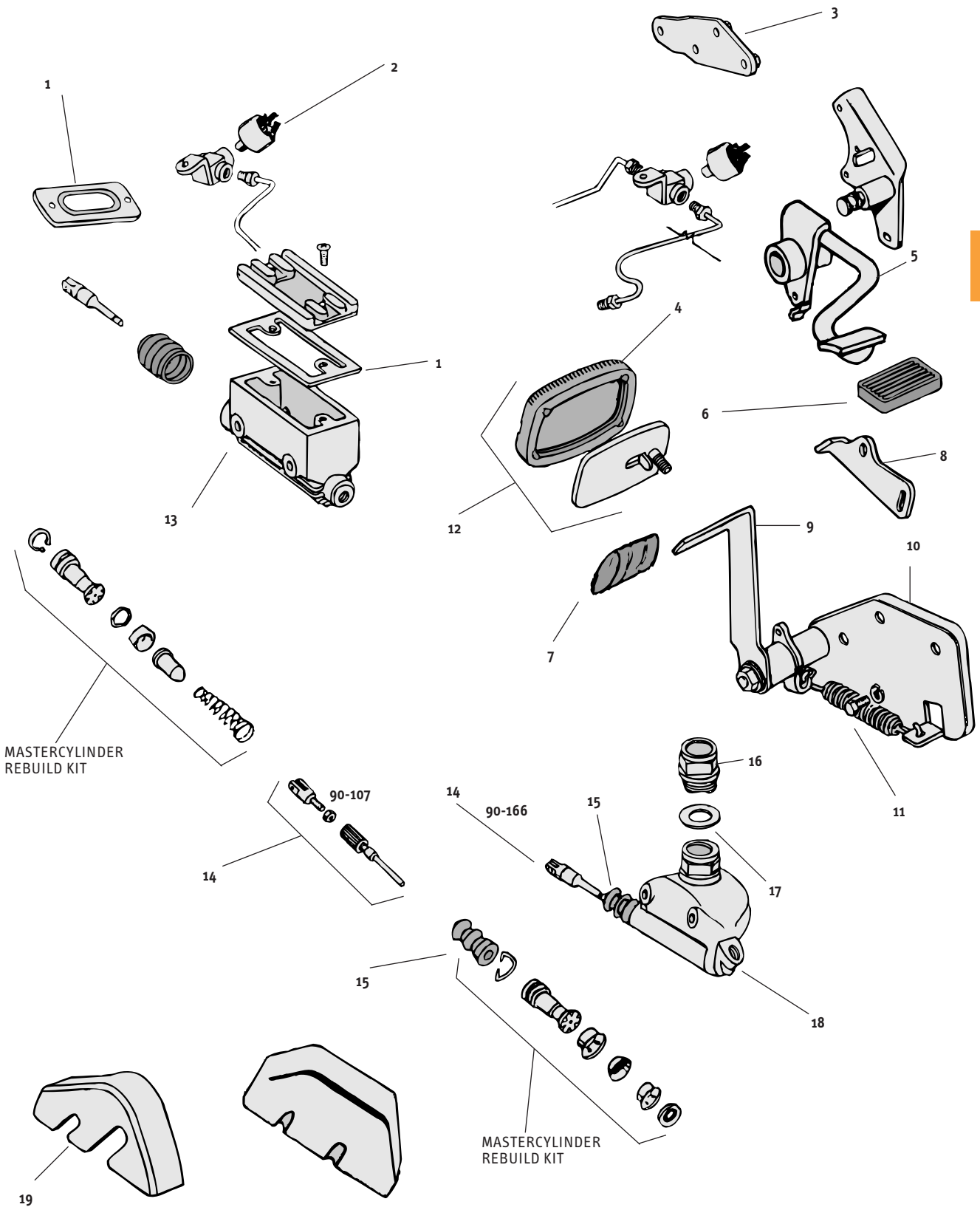

MECHANICAL BRAKE CONTROL PARTS FOR H-D® 61", 74", & 80" TWINS 1936 THRU 1957

ALL PARTS CHROME PLATED EXCEPT 90-68 AND 90-186 ALL PARTS SOLD EACH EXCEPT AS NOTED

1	—	RIGHT SIDE TWO HOLE ARM (OEM 42560-37)
2	**90-68**	CLEVIS PIN (OEM 42269-30)
3	—	FRONT CLEVIS (OEM 42333-30) TWO NEEDED
4	**47-75**	BRAKE PEDAL BACKING PLATE (OEM 42480-36)
5	**10-38**	FRONT BRAKE ROD (OEM 42326-37)
6	**17-40**	COMPLETE BRAKE LIGHT SWITCH ASSY. (OEM 72003-34 & 42280-35)
7	**90-178**	REAR CLEVIS (OEM 42273-30)
8	**10-39**	STOCK REAR BRAKE ROD (OEM 42257-36)
9	—	NUT/LOCK KIT BIG TWIN 1930 / 1957 INCLUDES TWO NUTS & TWO LOCKS. COLONY
10	**90-186**	CROSSOVER SHAFT (OEM 42550-31)
11	—	LEFT SIDE ONE HOLE ARM (OEM 42556-36)

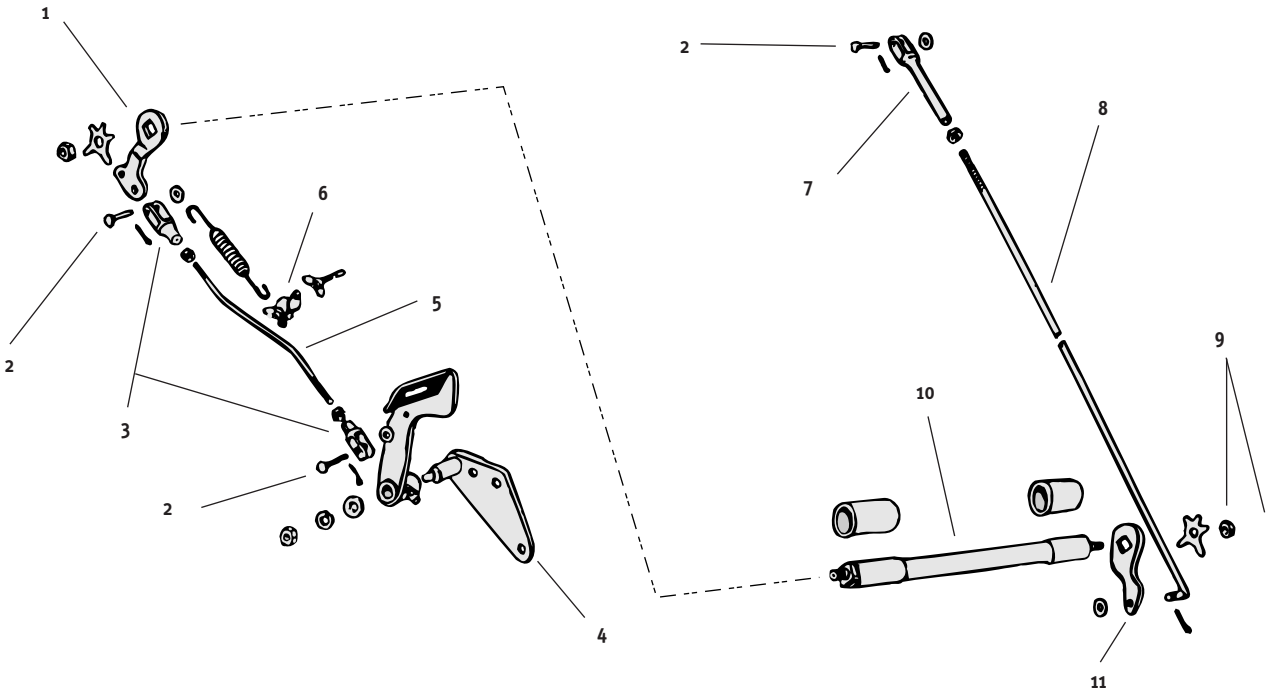



HANDLEBAR MASTER CYLINDER COVERS

For handlebar master cylinder on all H-D® models 1972 thru 1981. Replaces OEM 45057-72.

90-165 Plain chrome plated cover.. SOLD EACH

For handlebar master cylinder on all H-D® models late 1985 thru 1995, forward control mounted rear master cylinder on all H-D® models late 1987 thru 1995, and rear master cylinder on XL late 1987 thru 1995. Replaces OEM 45004-85 & OEM 42381-87.

90-435 Plain chrome plated cover. SOLD EACH

REAR BRAKE CONTROLS FOR FX & FXSB 1979 & LATER EXCEPT FXWG 1979 THRU 1985

ALL PARTS SOLD EACH EXCEPT AS NOTED

1 **78-187** MASTER CYLINDER COVER GASKET FITS MOST REAR & REMOTE RESERVOIRS 1977 & LATER: FL REAR LATE 1979 / 1984. FX REAR LATE 1979 / 1982, ALL BIG TWIN REAR REMOTE 1982 & LATER, SPORTSTER® REAR 1977 / 1981 (OEM 42455-80)

2 **90-410** PUSH ROD BOOT FXWG, FXST & FLST 1983 / EARLY 1987, FXR 1982 / 1990, FLT 1984 / 1991, SPORTSTER® 1980 / EARLY 1987 (OEM 40922-79)

3 **90-68** REAR BRAKE ROD CLEVIS PIN (OEM 42269-30)

4 **22-88** FOOT BRAKE LEVER RUBBER ONLY, ALL MODEL SUPER GLIDE® (OEM 42394-65)

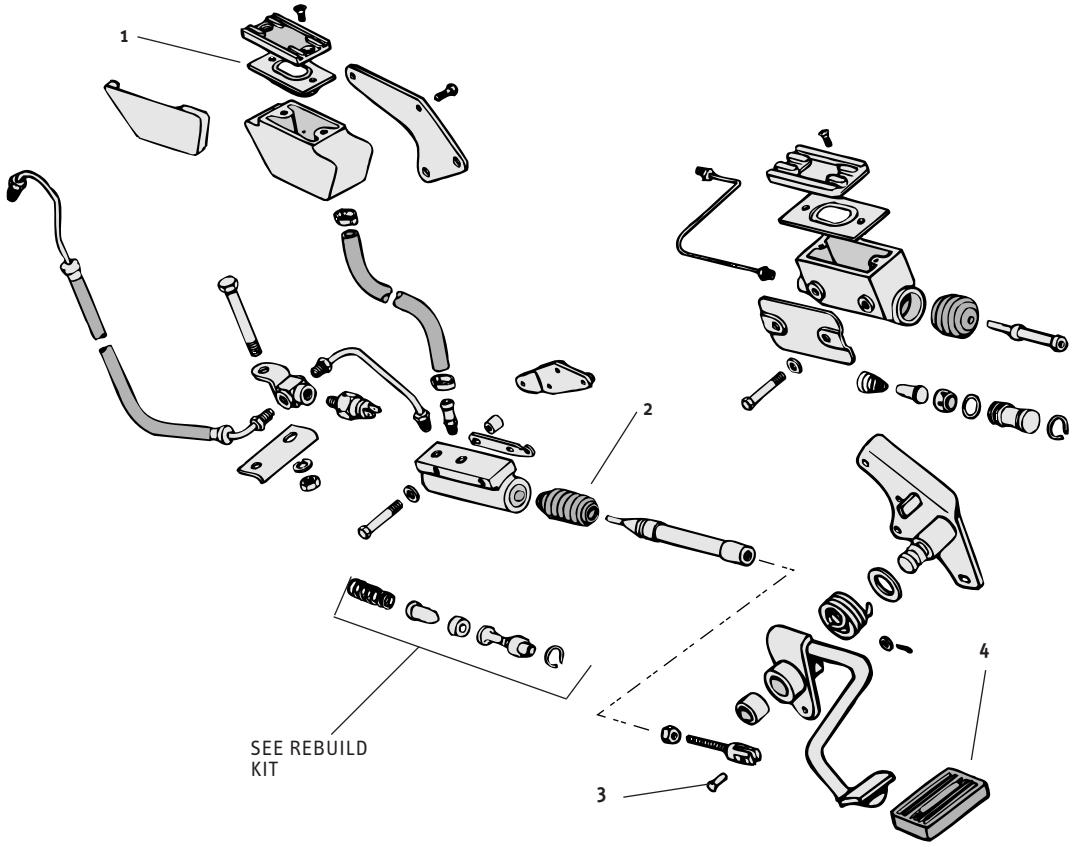

REAR BRAKE CONTROLS FXWG 1980 THRU 1982

ALL PARTS SOLD EACH EXCEPT AS NOTED

1 **17-44** STOPLIGHT SWITCH FLAT TYPE TER MINAL. ACCEL (OEM 72023-51)

2 **78-187** MASTER CYLINDER COVER GASKET (OEM 42455-80)

3 **90-293** KELSEY TYPE MASTER CYLINDER. CHROME (OEM 42453-80A & 42454-80A)

5 **90-351** BRAKE LINE TEE 1980 / 1986 (OEM 42318-72)

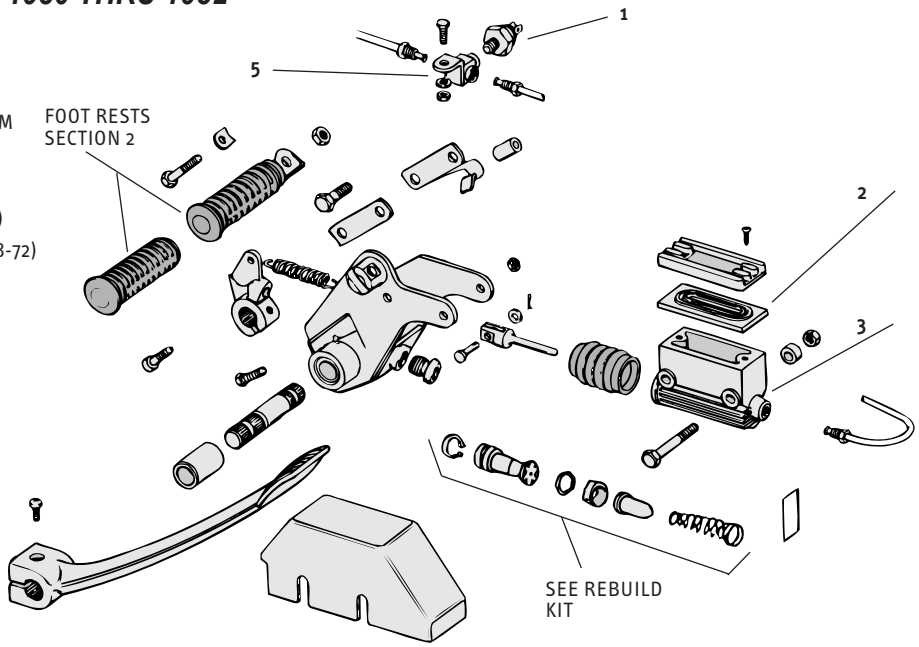

REAR BRAKE HYDRAULIC CONTROL FOR SPORTSTER® XL, XLCH (1980 & LATER SHOWN)

ALL PARTS SOLD EACH EXCEPT AS NOTED

1	**95-347**	BRAKE PIVOT SHAFT BUSHING 1977 / 1979 (OEM 34898-79)
3	**78-187**	MASTER CYLINDER COVER GASKET 1980 & 1981 (OEM 42455-80)
4	**90-410**	PUSH ROD BOOT FXWG, FXST & FLST 1983 / EARLY 1987, FXR 1982 / 1990, FLT 1984 / 1991, SPORTSTER® 1980 / EARLY 1987 (OEM 40922-79)
5	**47-107**	BRAKE PEDAL 1980 & LATER (OEM 42459-80)
6	**17-44**	REAR BRAKE STOPLIGHT SWITCH INCLUDES TERMINALS & INSULATORS. ACCEL (OEM 72023-51)

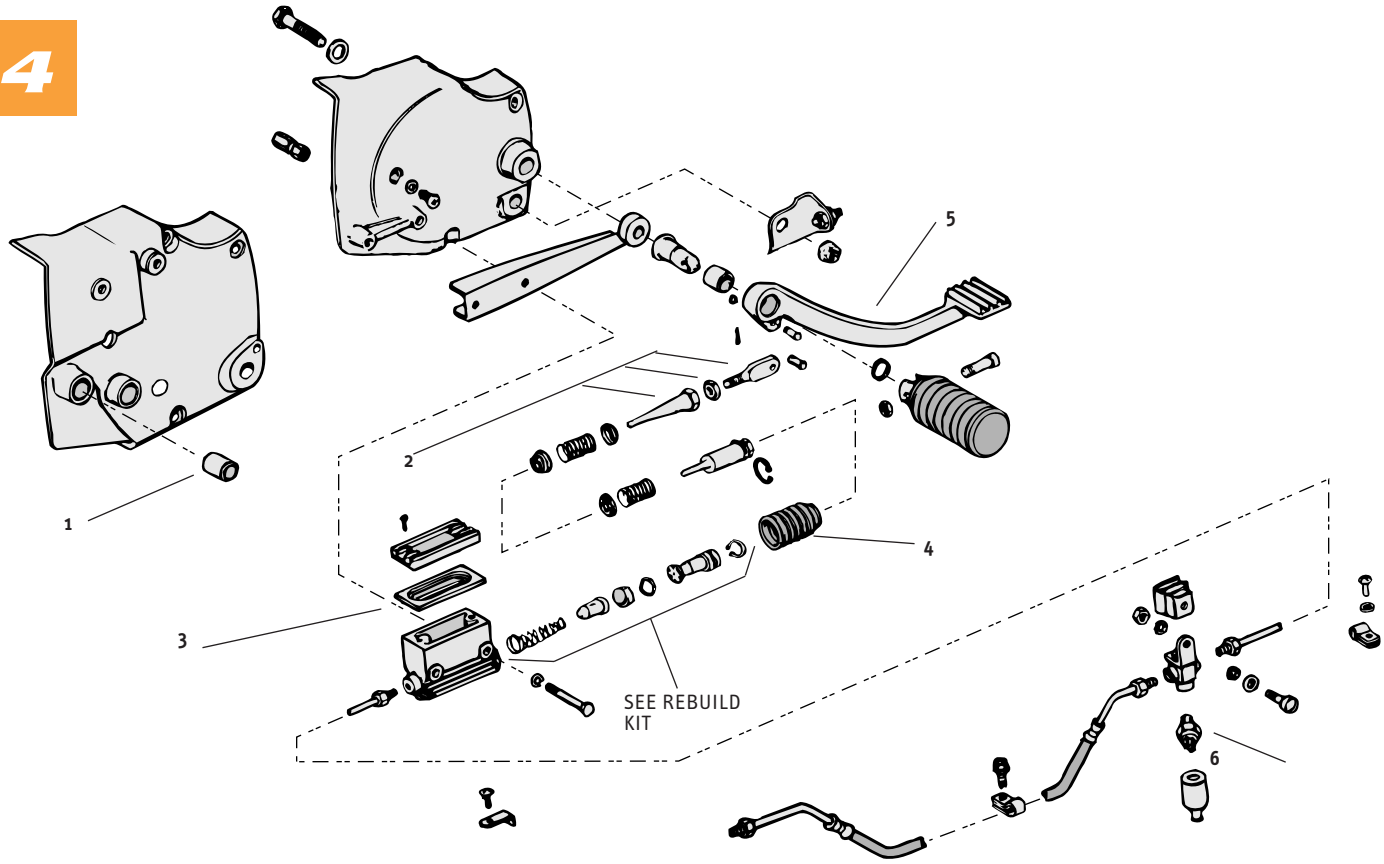

MASTER CYLINDER COVER

89-202 For XL 1982 thru 2001. SOLD EACH



REAR WHEEL MECHANICAL BRAKE PARTS FOR H-D® SPORTSTER® & K MODELS 1956 THRU 1978

ALL PARTS SOLD EACH EXCEPT AS NOTED

1	**17-58**	REAR BRAKE LIGHT SWITCH SPORTSTER® 1967 / 1974 (OEM 72004-70)
2	**90-68**	CLEVIS PIN (OEM 42269-30)
3	**90-184**	ADJUSTING NUT 1954 / 1978. CHROME (OEM 42264-52)
4	—	CLEVIS. CHROME (OEM 42330-30)
5	**10-30**	CHROME STOCK ROUND ROD & CLEVIS 1967 / 1975
6	—	CHROME BRAKE LEVER 1954 / 1978 (OEM 41925-52)
7	**90-421**	REAR OPERATING LEVER SPRING 1975 / 1978 (OEM 41667-75)
8	**95-347**	BRAKE PIVOT SHAFT BUSHING 1977 / 1979 (OEM 34898-79)
9	**47-100**	CAD PLATED BRAKE PEDAL 1954 / 1974 (OEM 42410-52)
10	—	NUT/LOCK KIT BIG TWIN 1930 / 1957 INCLUDES TWO NUTS & TWO LOCKS. COLONY
11	**90-186**	CROSSOVER SHAFT (OEM 42550-31)
12	—	LEFT SIDE ONE HOLE ARM (OEM 42556-36)

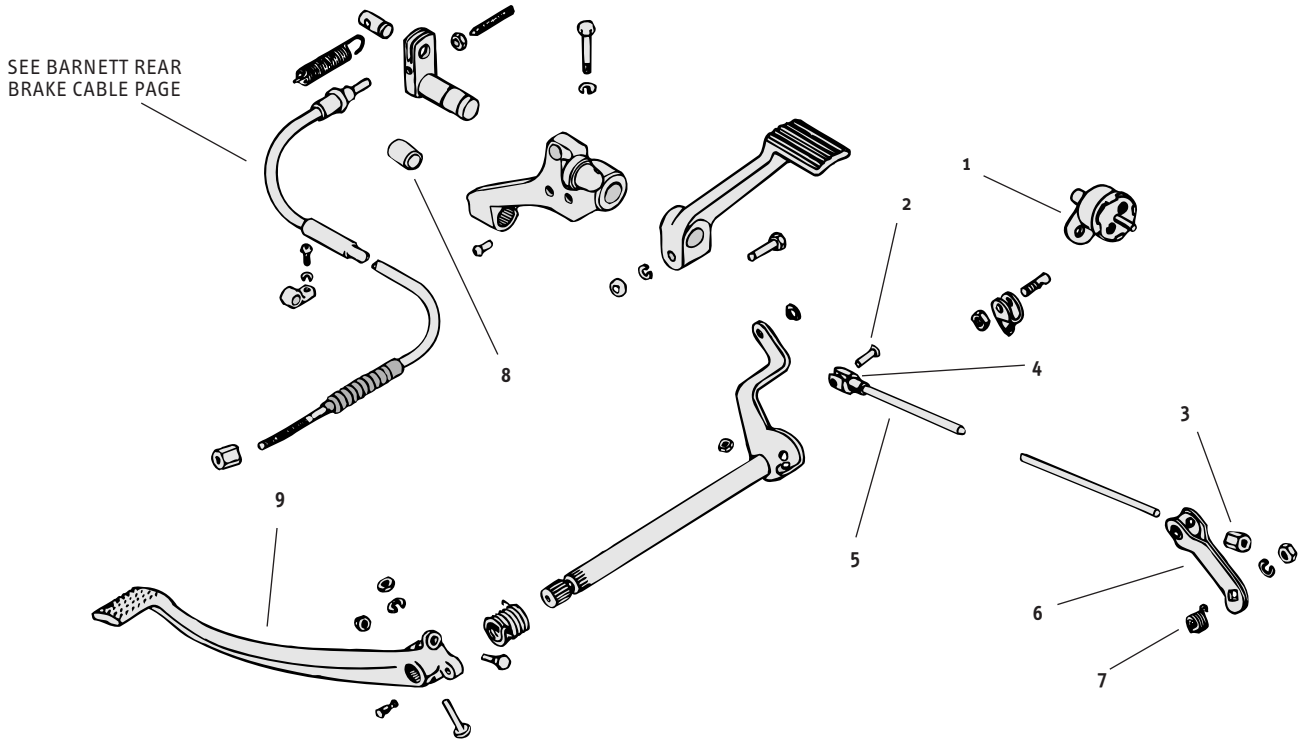

REAR BRAKE CONTROLS FXWG 1983

ALL PARTS SOLD EACH EXCEPT AS NOTED

1	**17-44**	STOPLIGHT SWITCH FLAT TYPE TERMINAL. ACCEL (OEM 72023-51)
2	**78-187**	MASTER CYLINDER COVER GASKET (OEM 42455-80)
3	**90-293**	KELSEY TYPE MASTER CYLINDER. CHROME (OEM 42453-80A & 42454-80A)
5	**90-351**	BRAKE LINE TEE 1980 / 1986 (OEM 42318-72)
6	**90-410**	PUSH ROD BOOT FXWG, FXST & FLST 1983 / EARLY 1987 (OEM 40922-79)
7	**90-68**	REAR BRAKE ROD CLEVIS PIN (OEM 42269-30)
8	**22-111**	BRAKE LEVER PAD (OEM 42532-82)
9	**96-241**	1/4" LOCKWASHER (OEM 7036)
10	—	MACHINED ALUMINUM REMOTE RESERVOIR BIG TWIN W/HAYES MASTER CYLINDER 1982 & LATER. REPLACES OEM 41800-81A. INCLUDES HARDWARE & FITTINGS
11	**90-151**	REBUILD KIT FOR OEM & PART NO. **90-224** HANDLEBAR MASTER CYLINDERS OEM 45063-72)

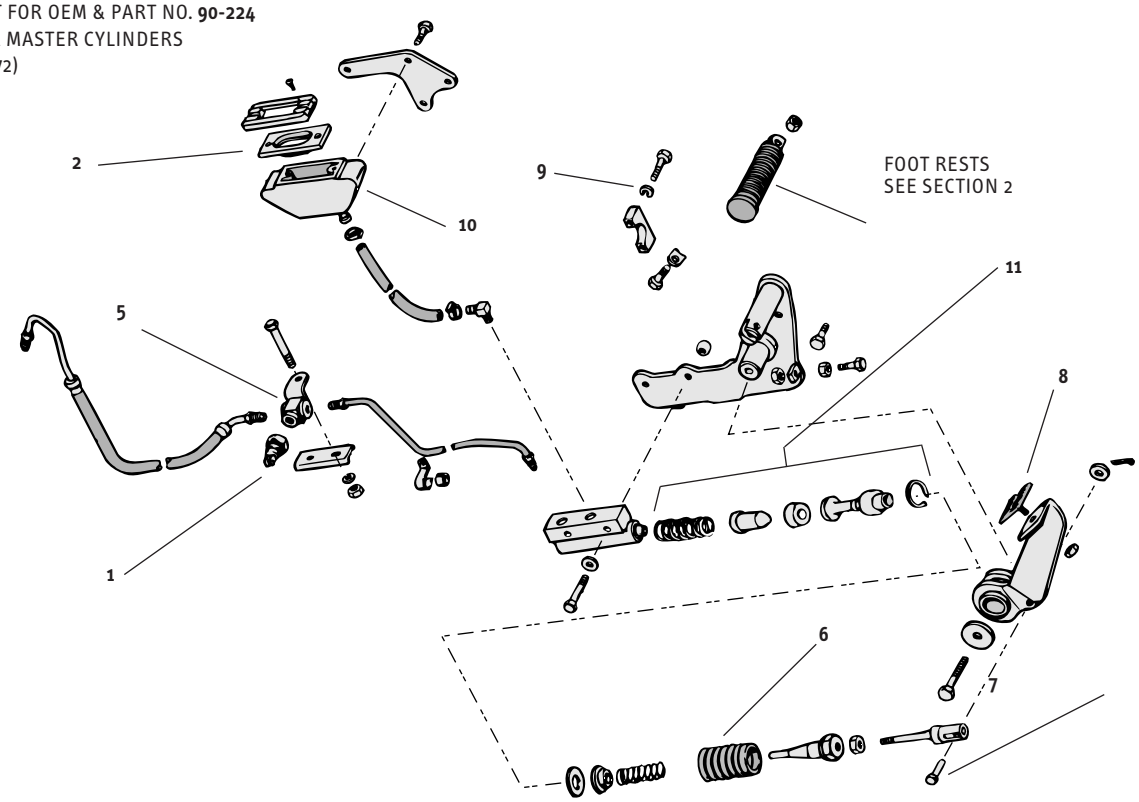

REPAIR & REPLACEMENT PARTS FOR FORWARD CONTROLS

17-43	Brake light switch (early). Accel. OEM 72002-51.
17-44	Brake light switch (late). Accel. OEM 72023-51.
47-50	Weld on tab with bolts. **U.S.A. MADE**.
90-387	Brake plunger for kits our part No. **47-128** (page 4-51)
10-55A	Stainless rod end, 5/16-24 thread.

SOLD EACH



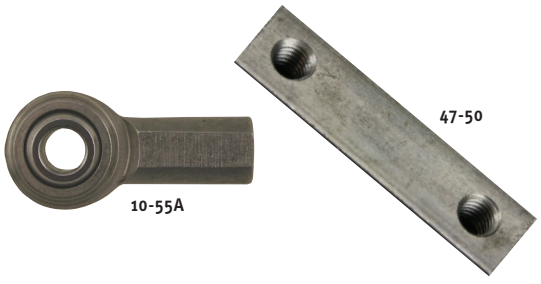

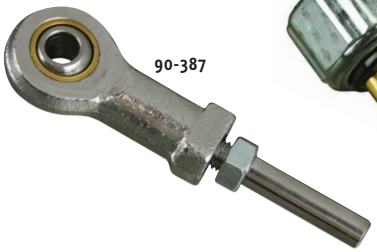



A. *DIE CAST MIRRORS*

46-50 Fits all H-D® V-Twins 1967 & later. SOLD EACH
OEM 91875-70A.
46-52 8" Stem, fits all models 1965 & later. SOLD AS PAIR
OEM 91879-67. **NOTE:** These mirrors are sold as pair for right and left. Tinted.

B. *SCROLLED MIRROR*

Die-cast scrolled mirror with "V-TWIN" on the face.
46-51 Fits 1967 & later, all models. SOLD EACH

C. *MALTESE CROSS MIRRORS*

Die cast, chrome plated mirrors.
46-130 Mirror with short straight stem. SOLD EACH

D. *OVAL MIRRORS*

These chrome plated mirrors are sold each. Thru lever mounting fits either left or right. SOLD EACH
46-103 Mirror with smooth back. Not die cast.

E. *STOCK ROUND MIRRORS*

Chrome plated mirror with two piece stem to fit on left or right side. Fits stock mount location on Big Twin and Sportster®.
46-99 Mirror with 3" diameter face. SOLD EACH

F. *OVAL MIRROR SET*

Die cast oval mirror set with plain back and cut out stem.
46-98 Mirror set. SOLD AS SET

G. *3-D SCULPTED MIRROR SET*

46-122 Die cast, chrome plated mirrors. SOLD AS SET
These mirrors are sold as pair for right and left.

A



B



CHROME
PLATED

4

C

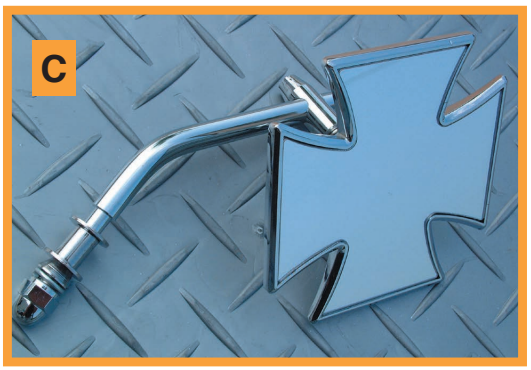

CHROME
PLATED
46-130

D



46-103

CHROME
PLATED

E



F



CHROME
PLATED

G



CHROME
PLATED



A

CHROME PLATED

A. *REPLACEMENT TAPERED MIRRORS*

Die cast, chromed mirrors with standard H-D® style stems fit 2003 & later VRSC, touring, models, Sportster®, Softail®, Dyna® & FXR.

46-239 Tapered mirrors. These mirrors are sold as pair for right and left. OEM 92022-03. SOLD AS PAIR

B. *BLACK CLASSIC ROUND MIRRORS*

Classic style round mirrors that have been beautifully black powder-coated. 4.5" diameter, available in short or long stem.

46-17 Black round mirror w/short stem, LH. SOLD EACH
46-18 Black round mirror w/short stem, RH.
46-19 Black round mirror w/long stem, LH.
46-20 Black round mirror w/longstem, RH.

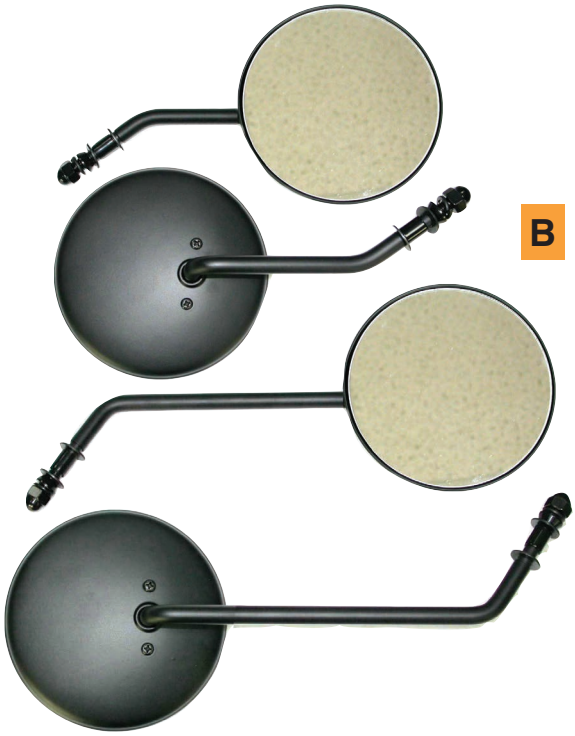

B

C. *SKULL MIRRORS*

These mirrors are beautifully chrome plated aluminum & have a custom skull design mirror heads & stems. Mounting hardware included.

46-21 Chrome skull mirror set. SOLD IN PAIRS

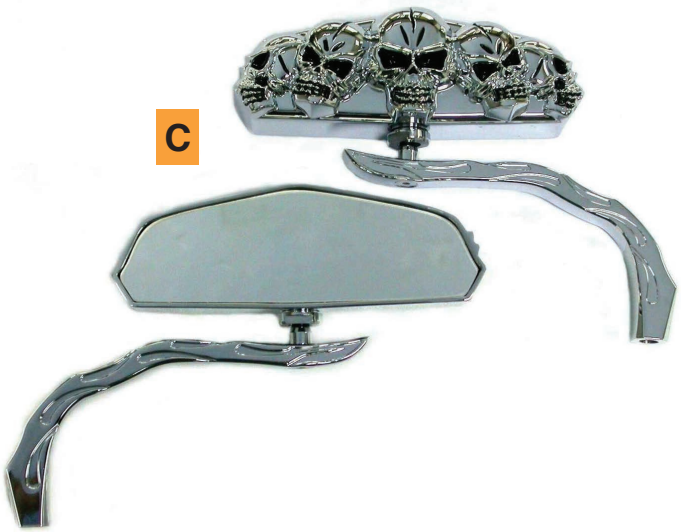

C



D

CHROME PLATED

D. *UNIVERSAL MIRROR CLAMP*

66-72 Use on 3/4", 7/8" and 1" bars. SOLD AS SET



E

E. *MIRROR CLAMP FOR H-D®*

Mounts to 1" bars and is designed to accept 8mm mirror stems as used on H-D®. Allows rider to relocate mirrors to any desired position.

66-94 Chrome mirror clamp. SOLD EACH

A. *CUSTOM FAIRING MIRRORS*

These custom designed fairing mirrors are easy to install as an upgrade, replacement or for custom use. These mirrors are 1" wider than the OE mirrors and includes a hidden wide eye lens, all necessary hardware & mounting instructions. Available with or without amber LED indicator display.

Fits all 1996 & later FLHT, FLHTC & FLHTCU models.

46-11 Black custom fairing mirror set. SOLD AS SET
46-12 Black custom fairing mirror set w/LED indicator.
46-13 Chrome custom fairing mirror set.
46-14 Chrome custom fairing mirror set w/LED indicator.


46-11


46-14

A


46-12

4


46-13

B

B. *LOW PROFILE CHOPPER MIRROR*

Chrome metal or die cast mirrors. 2" x 4-1/2" Flat mirror face. When a big mirror will break up the smooth lines of a hot custom bike, use our low profile chopper mirror. They look great and function equally as well.

METAL PART NO.	DIE CAST PART NO.	STEM TYPE
46-93	**46-95**	H-D® thru lever bracket.

SOLD EACH



46-93


46-95

LATE MODEL FORWARD CONTROLS 2007-2017 FL

47-245 Chrome 07-17 FL forward control kit
OEM 33909-08A

47-246 Black 07-17 FL forward control kit
OEM 33909-08A. Fits: 2007-17 FLSTC / FLSTF / FLSTN / FLSTSB / FLSTSC models.

NEW!



LATE MODEL FORWARD CONTROLS 2018 - LATER FXBB / FXLR

47-247 Chrome 18 later FX forward control kit
OEM 50700061

47-248 Black 18 later FX forward control kit
OEM 50700061. Fits: 2018 later FXBB / FXLR models.

NEW!





CONVERSION KIT FOR DYNA '03'-'17



47-250

47-249 Chrome reduced reach conversion kit for Dyna 03-17 models.

47-250 Black reduced reach conversion for Dyna 03-17 models.

NEW!

ULTIMA® BILLET FORWARD CONTROLS FOR '36 -'99 BIG TWIN

These high quality forward controls are machined from billet aluminum then polished or anodized to a show quality finish.

47-440 Forward control set, polished, 3/4" Bore
47-441 Forward control set, black, 3/4" Bore
47-540 Forward control set, polished, 5/8"Bore
47-541 Forward control set, black, 5/8" Bore

47-546 Master cylinder rebuild kit, 3/4"Bore
47-547 Master cylinder rebuild kit, 5/8" Bore



ULTIMA® BILLET FORWARD CONTROLS FOR 2000 - UP BIG TWIN

NEW!

These high quality forward controls are machined from billet aluminum then polished or anodized to a show quality finish.
Master cylinder bore diameter is 3/4". SOLD AS KIT

47-330 Forward control set, polished

47-331 Forward control set, black anodized



ULTIMA® EXTENDED REACH KIT FOR FORWARD CONTROLS 2000-2017

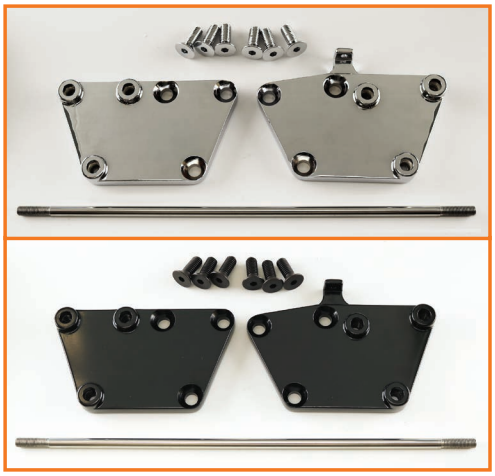

NEW!



47-495 Chrome Extension Kit for Forward Controls '00-'17.
47-496 Black Extension Kit for Forward Controls '00-'17.

4

SOFTAIL® '18-UP EXTENDED REACH FORWARD CONTROL ABS KIT

NEW!



These extended reach kits relocate the rider foot controls a full 3" further forward for a more comfortable riding position for taller riders to stretchout in the saddle. Easy to install. Fits: 2018 up FLSB / FXFBS Softail® models equipped with ABS. (not compatible with engine guards) Installation of kit requires a extended brake line fitted (not included) Sold as kit.

47-92 Chrome extension reach forward control kit ABS 2018 up Softails®.

FORWARD CONTROL REPLACEMENT PARTS

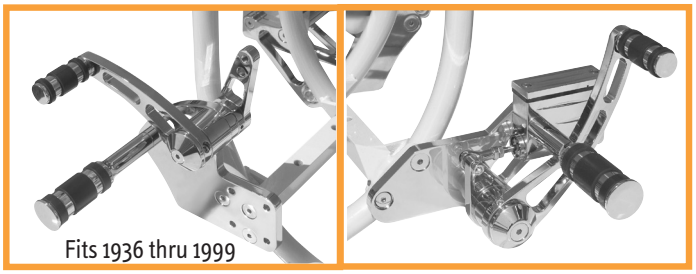

Fits 1936 thru 1999



22-193

22-194

22-9 Replacement rubber, brake & shifter pegs KIT (3 PCS)

22-193 Matching rear pegs. Chrome plated. Use with part No. **23-140** or **23-100** footpeg supports. SOLD AS PAIR

22-194 Matching rear pegs, spring loaded, flip-up style. Chrome plated. 3/8" Mounting hole. SOLD AS PAIR

22-195 Matching rear pegs, spring loaded, flip-up style. Chrome plated. 1/2" Mounting hole. SOLD AS PAIR

90-959 Master cylinder repair kit for 3/4" bore. SOLD EACHH

A. ADJUSTABLE PASSENGER FOOT PEG MOUNT KIT

These new adjustable foot peg kits maximize your passengers riding comfort. Allows you to raise & lower the passenger foot peg to accommodate taller or shorter riders. Easy to adjust through a 360 degree range (depending on model) , allowing both fore and aft & up and down height adjustment. Includes left & right adjustable assembly and all required mounting hardware. (foot pegs are sold separately)

22-101 Adjustable passenger foot peg mount kit. SOLD AS PAIR

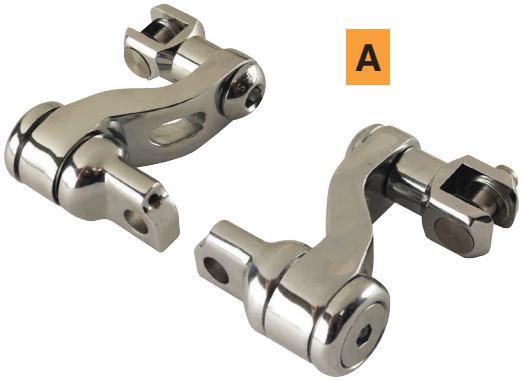

A

C. REAR FOOTREST BRACKET SET

Can be used for rear footrest brackets on Big Twin 1971 thru 1984. Direct replacement for FX 1971 thru 1981. Sold as set.

23-134 Right and left brackets. Replaces OEM 47116-77 and 47117-77.

C

CHROME PLATED

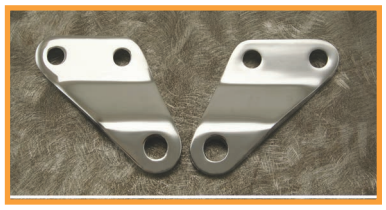

D. FOOTPEG SUPPORTS

U.S.A. MADE zinc plated bullet style footpeg supports. Sold each.

22-123 3/8"-24 Stud. Fits FL models 1965 thru thru 1984 and FX models 1971 thru 1985. OEM 50973-65.

22-124 1/2"-20 Stud. Fits FL models 1941 thru 1964 and FX models 1971 & 1972. OEM 52683-74.

D



22-123

ZINC PLATED



22-124

A. *HEAVY NON-SLIP CLAMP*

U.S.A. MADE clamps used for footpeg and mirrors. No chrome or valuable paint damage when installing. No opening or pinching closed to install therefore no chrome cracking or damage to outside radius of clamp.

66-65 1" I.D. x 3/8" mounting hole. SOLD AS PAIR
66-215 1-1/4" I.D. x 3/8" mounting hole.
66-216 1-1/8" I.D. x 3/8" mounting hole.

66-213 1" I.D. x 1/2" mounting hole. OEM 50904-85T.
66-66 1-1/4" I.D. x 1/2" mounting hole. OEM 50903-85T.
66-214 1-1/8" I.D. x 1/2" mounting hole. OEM 50905-85T.

B. *FOOTPEGS MOUNTS FOR ENGINE GUARDS*

Clamp on peg mounts, use male end foot pegs. Comes in three sizes to fit most size engine guards. Requires 3/8x1-1/2" thru bolts to mount pegs.

23-1 Footpeg mounts for 1" bar SOLD AS PAIR
23-2 Footpeg mounts for 1-1/4" bar, replaces OEM 50957-02A

C. *HIGHWAY PEG SUPPORT KIT*

Chrome adjustable highway peg support kit for 04-up XL models with mid-controls. These kits feature forged aluminum levers and mounting brackets and come with all hardware required in a beautiful chrome finish. OEM 49053-04.

23-144 Chrome adjustable highway peg support kit. SOLD AS KIT

D. *FOOTPEG SUPPORTS*

Stock replacement style footpeg supports with hardware. Works with many custom footpegs.

23-140 Fits FX late 1972 thru 1981, FXST 1984 & later, and FXR 1983 & later. Replaces OEM 50900-72T. SOLD AS PAIR
23-100 Fits Softail® 2000 & later. Bolts thru supports with 3/8" - 16 x 1-3/4" allen. Replaces OEM 50942-00.

E. *ANTI-VIBE FOOTPEGS WITH STIRRUP HEEL REST*

22-6 Large driver peg with male mount. Fits Softail®, FXWG & FXR. SOLD AS PAIR
22-264 Passenger pegs.

F. *CUSTOM FOOTPEGS WITH MALE MOUNTS*

Hot Looks — These custom footpegs were the hand picked favorites of the developers of the Chrome Horse® Forward Controls. They are suitable for your own custom applications.

22-180 Chrome plated, wide band pegs. SOLD AS PAIR
22-181 Knurled aluminum non-slip pegs.

A



CHROME PLATED

B



C



4

D



23-140



23-100

E



CHROME PLATED

22-180 CHROME PLATED

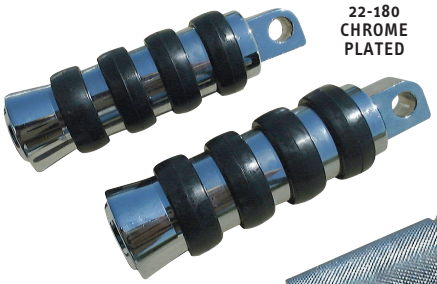

F

22-181 ALUMINUM



4

A



A. *BILLET CHROME REAR FOLDING PEGS W/ FLAME DESIGN*

High quality grips & pegs made of billet alunminum then chrome plated. All sold in pairs.

22-255 Rear folding pegs.

B. *RIDER & PASSENGER PEGS FOR XL & FX*

Zinc die cast & chrome plated with black rubber ends. One of the most beautifully made & designed pegs on the market today. SOLD AS PAIR

22-113 Rider peg. Same as stock. OEM 50939-52.

B



22-113

C. *RAIL FOOT PEGS*

These pegs can mount in any position and look good due to their unique design. Rubber rails run lengthwise around the peg. The rubber comes from the inside out — it is not glued or pressed on from the outside. No chance of coming loose. Die cast and chrome plated.

22-139	Shifter peg.	SOLD EACH
22-140	Passenger peg, small male mount.	SOLD AS PAIR
22-141	Passenger peg, small female mount.	SOLD AS PAIR
22-142	Driver peg, large male mount.	SOLD AS PAIR
22-143	Driver peg, large female mount.	SOLD AS PAIR
22-144	Kick arm pedal.	SOLD EACH

See Sec. 4 for Rail grips & brake pedal pad.

C



22-139

22-143

CHROME PLATED

22-144

22-140

D. *O-RING PEGS FOR H-D®*

Fits Low Rider® stock hi-way brackets and rear brackets on FX and Sportster®.

22-92	Standard length pegs.	SOLD AS PAIR
22-93	Extended length pegs.	SOLD AS PAIR
22-3	Replacement O-rings.	SOLD AS PKG. OF 10

D



CHROME PLATED

22-92

E. *O-RING PEGS FOR HARLEY®*

Harley® shock mount. Can be used universally.

22-90	3/8" Stud mount.	SOLD AS PAIR
22-91	1/2" Stud mount.	SOLD AS PAIR
22-3	Replacement O-rings.	SOLD AS PKG. OF 10

E



CHROME PLATED

F. *UNIVERSAL CLAMP-ON O-RING PEGS*

Footpegs with pivot blocks and clamps.

22-72	To fit 1" diameters.	SOLD EACH

F

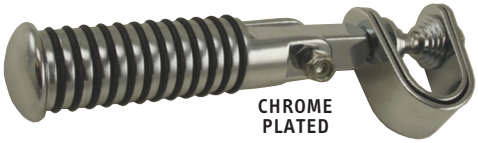

CHROME PLATED

A. *PASSENGER PEGS*

Stock replacement for all FX style passenger pegs, at a cost less than the OEM mounting bracket price.

22-98 For 1971 & later Big Twins. OEM 50907-69A. SOLD AS PAIR
23-140 Footpeg supports with hardware. Fits FX late 1972 thru 1981, FXST 1984 & later, and FXR 1983 & later. Replaces OEM 50900-72T.

B. *MATCHING CHROME FOOT & SHIFTER/BRAKE PEGS*

Matching Foot & Shifter/brake pegs

22-266 Footpeg, chrome w/male mount. SOLD AS PAIR
22-267 Shifter/brake peg, chrome with 5/16-18 buttonhead bolt included. SOLD EACH

C. *CUSTOM O-RING PEGS*

Replacement pegs for driver and passenger.

22-77 For FXR 1982 & later. SOLD AS PAIR
22-1 Replacement O-rings. SOLD AS PKG. OF 10

D. *REAR FOOTPEG SETS FOR SPORTSTER®*

Passenger footpeg/mounting bracket sets for Sportster® 1983 & later. Chrome plated rear footpeg mounting bracket available separately or with choice of rubber or O-ring passenger footpegs.

23-130 Rubber passenger footpeg/mounting bracket set. SOLD AS PAIR
23-131 O-Ring passenger footpeg/mounting bracket set.

E. *FOOT REST RUBBERS*

Rubber only.

22-46 OEM 50940-52. SOLD EACH
22-114 Fits all FXR 1982 & later. OEM 50646-82.

F. *RUBBER INSERT FOOTRESTS*

Chrome die cast footrests with black rubber inserts. Complete with 1" & 1-1/4" clamp set.

22-121 Rubber insert footrests. SOLD AS PAIR

G. *FOOTRESTS WITH WING DESIGN*

Clamp type footrest with wing design. Chrome plated. Complete with 1" and 1-1/4" clamp set.

22-122 Footrests with wing design. SOLD AS PAIR

A

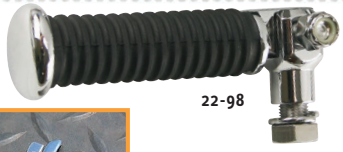

22-98

CHROME PLATED



23-140



22-266

B



22-267

4

C

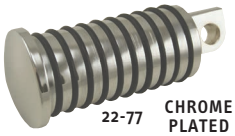

22-77 CHROME PLATED

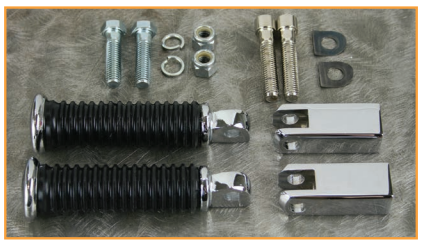

23-130

D

CHROME PLATED

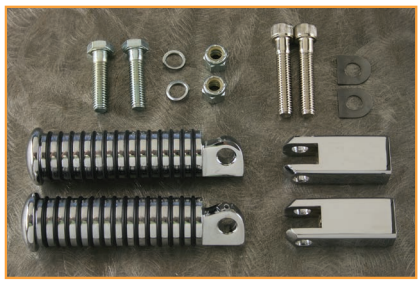

23-131

E



22-46 BLACK RUBBER



22-114

F

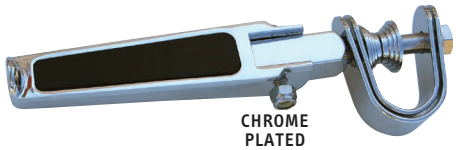

CHROME PLATED

G

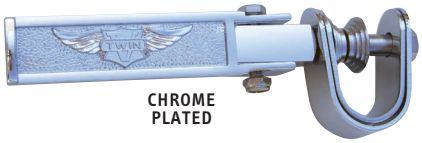

CHROME PLATED

A. *SPLIT RUBBER ANTI-VIBE FOOT PEGS*

Our chrome plated anti-vibe foot pegs isolate the vibration common on Harleys® by the design of hollow-core rubber inserts. The three types of mounts allow the pegs to be used on early or late model motorcycles. Also, the mounting ends are interchangeable.

22-126	Shifter peg.	SOLD EACH
22-127	Passenger peg with small male mount.	SOLD AS PAIR
22-128	Passenger peg with small female mount (5/8").	SOLD AS PAIR
22-129	Driver peg with large male mount.	SOLD AS PAIR
22-130	Driver peg with large female mount.	SOLD AS PAIR
22-115	Extended Shifter peg	SOLD EACH

Pegs for various mounting applications.

22-136	Peg with 1/2" stud mount.	SOLD AS PAIR
22-137	Peg with 3/8" stud mount.	
22-138	Fits 1" & 1-1/4" diameters. Clamp type.	

Replacement rubbers for above anti-vibe pegs.

22-148	Rubbers for small foot peg.	SOLD AS SET OF 8
22-149	Rubbers for large foot peg.	SOLD AS SET OF 8
22-150	Rubbers for shift peg.	SOLD AS SET OF 3

Mounts for our solid face "Live to Ride" anti-vibe, rail style and A/C billet pegs.

22-145	Large female mount.	SOLD AS PAIR
22-146	5/8" Female mount.	
22-147	Male mount.	

B. *DIAMOND FOOT PEGS*

Diamond pegs and shifter are the same high quality as our rail style pegs. Interchangeable mounting ends. Chrome plating is top notch for show-winning appeal.

22-151	Shifter peg.	SOLD EACH
22-152	Passenger peg, small male mount.	SOLD AS PAIR
22-153	Passenger peg, small (5/8") female mount.	SOLD AS PAIR
22-154	Driver peg, large male mount.	SOLD AS PAIR
22-155	Driver peg, large female mount.	SOLD AS PAIR

See Sec. 4 for Diamond grips & brake pedal pad.



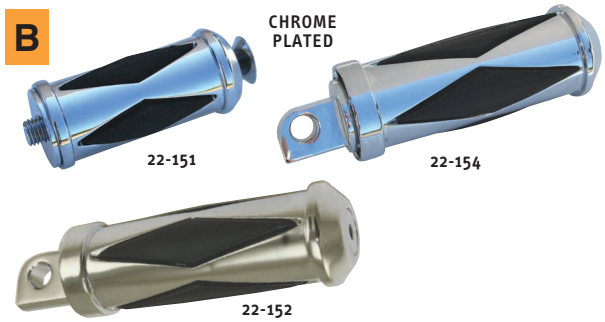

A. *ADJUSTABLE KNURLED ROLL FOOTPEGS*

Universal adjustable foot pegs with 3/8" mounting hole.
T-6061 Aluminum. SOLD AS PAIR

22-160 Chrome adjustable pegs
22-161 Black adjustable pegs



B. *TORNADO II PEGS*

SOLD AS PAIR

22-272 Chrome rear passenger pegs. 1/2-13 thread.
22-273 Black rear passenger pegs. 1/2-13 thread.
22-277 Black & Bronze shifter & brake pegs. 5/16-18 thread.

C. *LONE STAR FOOT PEGS*

SOLD AS PAIR

22-278 Chrome front rider pegs. 6" long, 3/8-16 thread.
22-279 Black front rider pegs. 6" long, 3/8-16 thread.
22-280 Chrome rear passenger pegs. 1/2-13 thread.
22-281 Black rear passenger pegs. 1/2-13 thread.

SOLD AS SET

22-282 Chrome shifter & brake pegs. 5/16-18 thread.
22-283 Black shifter & brake pegs. 5/16-18 thread.



D. *MILWAUKEE EIGHT FOOTPEG MOUNT KITS*

Kit includes a pair of alum peg mounts, footpeg hardware and frame mounting hardware.

22-300 Chrome M8 passenger foot peg mount kit OEM 50500771
22-301 Black M8 passenger foot peg mount kit OEM 50500771

22-302 M8 Footeg hardware kit. Fits: 18-20 FLSB / FXBB / FXBR / FXFB / FXLR models.



E. *FOOT PEG MOUNTING BOLTS & NUT KITS*

Custom shoulder bolts & locknuts to mount driver & passenger pegs.

123-15 Fits FX & XL driver and FL passenger 1952 & later. OEM 50970-52.
123-14 Fits FX & XL passenger 1969 & later. OEM 4721.

E
CHROME PLATED



F



F. *FLOORBOARD HINGE & FOOTREST BOLT KITS*

Cad plated reproduction of special shoulder bolts, pins and bushings to mount floorboards and buddy footrests.

123-22 Bolt kit. Fits 1941 thru 1981. SOLD AS KIT
123-23 Bolt kit. Fits floorboards and buddy foot-rests 1941 thru 1964.
123-28 Bolt kit. Fits 1982 & later FL & FX with floorboards.

4

A

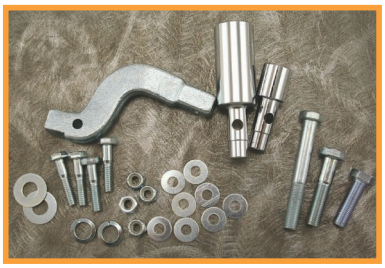



A. *ORIGINAL H-D® STYLE FLOORBOARD BRACKET KITS*

If you no longer have the stock mounting brackets, these replacement bracket kits are just what you need.

123-7 Bracket kit for aluminum primary. SOLD AS KIT
123-8 Bracket kit for steel ("tin") primary.

B



C



RECTANGULAR

CHROME PLATED



OVAL

B. *ADJUSTABLE FLOORBOARDS*

Oval style floorboards are adjustable front to back as well as height and angle. They will fit Softail® 1984 & later except Fat Boy®, Heritage Softail® and FXWG 1980 thru 1986.

123-18 Anti-vibration adjustable floorboards. SOLD AS KIT

C. *H-D® STYLE FLOORBOARDS*

THREE STYLES TO CHOOSE FROM

EARLY STYLE MOUNTS

Fits 1940 thru 1984 4 speed models.

123-5 Solid oval floorboards. Replaces OEM 50603-40. SOLD AS PAIR
123-4 Anti-vibe oval floorboards.
123-10 Anti-vibe rectangular floorboards. Replaces OEM 50603-74TA.

LATE STYLE MOUNTS

Fits 1980 & later 5 speed FL, Softail®, Road King® & FLT.

123-20 Solid oval floorboards. SOLD AS PAIR
123-21 Anti-vibe oval floorboards. Replaces OEM 50599-89T.
123-29 Anti-vibe rectangular floorboards. Replaces OEM 50621-79A.

REPLACEMENT PARTS

123-6 Oval replacement rubber pads. SOLD AS PAIR
123-11 Rectangular replacement rubber pads. OEM 50614-66T.
123-12 Anti-vibe bumpers. OEM 50620-74. SOLD AS SET OF EIGHT

D

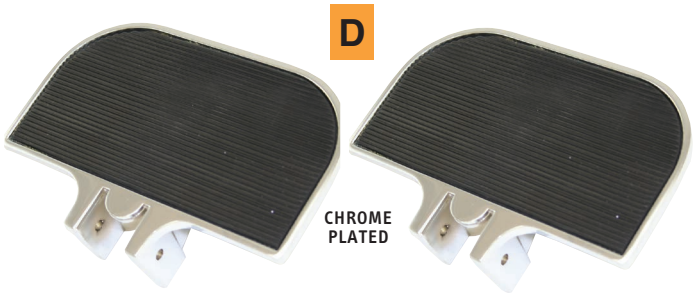

CHROME PLATED

D. *PASSENGER FLOORBOARDS*

Beautifully designed with black rubber insert. Bolts to existing foot peg mounts.

123-13 Fits all XL & FL models. SOLD AS PAIR

E



E. *PASSENGER FLOORBOARDS*

Chrome passenger floorboards for FLT models 1986-present.

123-39 Passenger floorboards, Rail. SOLD AS SET

F



CHROME PLATED

F. *UNIVERSAL MINI FLOORBOARD KIT*

Can be used as passenger or driver floorboards on bikes with clevis style mounting brackets.

123-27 SOLD AS KIT

A. *COMPLETE FOOTBOARD KITS FOR '06-'17 FL MODELS*

123-102 Chrome 2006-2017 footboard kit.
123-103 Black 2006-2017 footboard kit.

B. *REPLACEMENT INSERTS FOR FOOTBOARD KITS*

Replacement Footboard rubber inserts.

123-100 Replacement Footboard rubber insert kit M8 models OEM 50500629

123-101 Replacement Footboard rubber insert kit 06-17 FL models OEM 50621-06

NEW!







4

C. *FRAME MOUNT RIDER PEG BRACKET FOR SPORTSTER®*

23-108 Fits Sportster® 1954 thru 1978 stock swing arm only. SOLD EACH

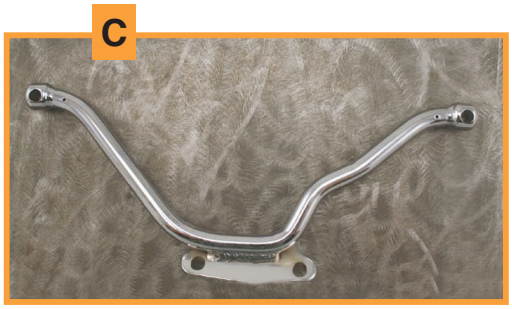

CHROME PLATED

D. *SPEEDOMETER DRIVE UNITS* SOLD EACH

57-90 Fits XL & FX, with 19" front wheels, 1973 thru 1983, and FXR 1982 & 1983. 2:1 Ratio speedometer. OEM 67127-73.
57-91 6T, Fits 1980 FX models (except FXWG), equipped with 85 mph speedometer. OEM 67124-80.
57-127 Fits FLT & FLHT, 1982 thru 1986 and FL 1981 thru 1984 4 speed. OEM 67073-81.
57-126 Fits FXR, FXD & Sportster® with 19" wheel, 1984 thru 1995. OEM 67127-84A.
57-125 Fits FXST, FXSTC, FXDWG and FXWG 4 speed with 21" wheel, 1984 thru 1995. OEM 67120-84B.
57-122 Fits FLT & FLHT, 1987 thru 1995. OEM 67073-87A.
57-123 Fits FXLR 1987 thru 1994. OEM 67132-85A.
57-124 Fits FLSTF & FLSTC, 1986 thru 1995. OEM 67125-86A.



E. *SPEEDOMETER DRIVE & GEAR FOR BIG TWIN 12MM*

57-95 Fits Big Twin 1941 thru early 1961. OEM 67130-36. 11 Tooth.
96-599 4-speed Speedo Drive gear for 1969-1980 speedo gear, 7T. OEM 35635-69.



F. *FRONT WHEEL SPEEDO DRIVE COVERS*

ALL PARTS CHROME PLATED

89-353 Fits Dyna Wide Glide®, Softail®, & FXWG, 4 speed models, 1984 thru 1995, and FLT, FLHT,and FLHS, 1987 & later. SOLD EACH
89-354 Fits Dyna Glide®, FX, FXR, and Sportster®, 1984 thru 1994, with 35mm and 39mm fork tubes.
89-458 Fits FX, FXR, & Sportster® (except XR1000), 1973 thru 1983, with 35mm fork tubes, FL 4 speed 1981 thru 1984, and FLT & FLHT, 1982 thru 1986.



4

A

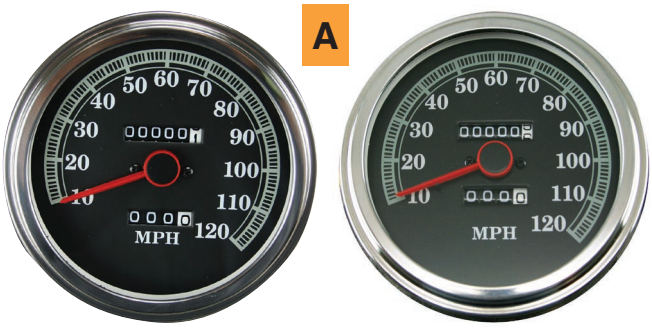

57-167 57-168

A. *LATE STYLE SPEEDOMETERS WITH 2240:60 RATIO*

This speedometer is for FXWG & Softail® models, 1984 thru 1990 with front wheel speedo drive unit.

57-167 Speedo with OEM style face. OEM 67027-81C. SOLD EACH

Fits Softail® models 1991 thru 1995 with front wheel speedo drive unit and self-cancelling turn signals.

57-168 Speedo with OEM style face. OEM 67027-91A. SOLD EACH

See chrome dash and speedo kit..

B



57-336



57-337

B. *48MM & 60MM SPEEDOMETERS*

Features:

- Easy push button recalibration
- LED illuminated face
- Polished stainless housing and bezel
- LCD odometer with resettable trip meter.
- Mechanical and electronic styles available.
- 60mm speedometers come with handlebar clamp.
- All sizes and ratios have 140 mph faces.

48MM ELECTRONIC SPEEDOMETER (FITS 95'-06' HD)

57-336 White face SOLD EACH
57-337 Black face

C



57-131



57-133

C. *CUSTOM MINI GAUGES*

Custom speedometer and tachometer gauges with a polished stainless bezel and chrome housing. Comes complete with chrome mount, and 12V dial light.

57-130 1:1 Ratio speedometer. Fits FX 1971 & 1972, FL 1968 thru 1980, and FXWG 1980 thru 1983 with transmission drives. SOLD EACH

57-131 2:1 Ratio speedometer. Fits Sportster®, FX & FXR, 1973 thru 1990 with front wheel drive, Sportster® 1954 thru 1972, and FL 1947 thru 1967 when using transmission speedometer drive. **NOTE:** Can be used on 1991 & later models if self-canceling turn signals are not used.

57-133 Electronic tachometer.

NOTE: Use clamp part No. **66-94** on page 4-59
12mm cable

D



D. *ELECTRONIC SPEEDO/TACH*

Speedo/tach combo meter, OEM#74461-03A. Fits 95-03 FLHR and 00-03 Softail® (except FXSTD).

57-1 Black MPH electronic Speedo. SOLD EACH

E

57-100



E. *COMBINATION SPEEDO/TACH*

The combination 120 mph speedometer & 7000 rpm, solid-state tachometer for H-D® with large dash, 1947 & later, in 2:1 ratio or 1:1 ratio. Tach shows engine speed the same way as the original FX equipment model, by reading coil output.

2:1 Ratio unit works with OEM transmission speedo drive units on 1947 thru 1967 FL and late model front wheel speedo drive applications. 16MM nut.

57-100 2:1 Ratio speedo/tach. SOLD EACH
1:1 Ratio unit works with FL, FX & FXWG, 1968 & later with transmission drive units.

57-99 1:1 Ratio speedo/tach. SOLD EACH

A. *PRO-MAX DIGITAL SPEEDO/TACH*

This new design digital Speedo has a bar graph tach built in, display indicators: H/beam light, neutral/ gear indicator light, oil pressure light, turn signals, digital odometer & trip meter functions. Beautiful custom designed chromed billet aluminum housing which mounts easily to any handle bar. Measures 110mm (L) x 57mm (H) x 38mm (W).

Note: Applicable sending unit/adapter and mounting bracket not included.

57-192 Pro-Max digital speedo/tach. SOLD EACH

B. *SPEEDOMETERS FOR FAT BOB® STYLE DASH*

NOTE: The exact face colors & numbers may vary with availability from manufacturer. Ratio will be correct. 5/8 x 18 nut.

2:1 RATIO SPEEDOMETERS

These speedometers are for FL 1947 thru 1967. They can also be installed on late FX with stock front wheel speedo drive unit (OEM 67127-73).

57-71 Speedo with 1960 style numbers. SOLD EACH
57-82 Speedo with 1950 style numbers.
57-94 Speedo with late style numbers.

1:1 RATIO SPEEDOMETERS

For use on FX, FXWG & FL, 1968 & later, with speedometer drive units mounted on the transmission.

57-88 Speedo with 1950 style numbers. OEM 67004-53. SOLD EACH
57-89 Speedo with 1960 style numbers.
57-92 Speedo with late style numbers. OEM 67004-68

SPEEDOMETER RESET KNOBS FOR H-D®

57-96 Knob & screw set. Fits all models Big Twin with large tank mounted speedo, 1968 thru 1989 and all import speedometers. OEM 67215-68 and 67217-68. SOLD AS SET

57-284 Knob & screw set. Fits Softail® 1990 thru 1995. How many of these little #@*&! have you lost going down the highway? At least two! This rubber reset button dust-and-water-proof boot is internally threaded.

57-265 Dust boot. Replaces OEM 67880-94. SOLD EACH

C. *ELECTRONIC SPEEDO FOR SOFTAIL®*

Electric speedometers for 1996-up Softails®. This unit is not a direct OEM replacement and requires a new wiring harness with pins and connectors requiring assembly.

53-196 Speedometer, fits 96'-99' Softails®, SOLD EACH
OEM#67027-99 / 67027-96A / 67027-96;
FLHR Road King, OEM#67027-99.

D. *SPEEDOMETER SENSORS*

Used to send electronic pulses to the speedometer from 5 & 6 speed transmissions. A = protrusion depth

17-149	Speed sensor, OEM 74402-95B	A = 1.190"	SOLD EACH
17-150	Speed sensor, OEM 74420-94C	A = 0.810"	SOLD EACH
17-151	Speed sensor, OEM 74437-96	A = 0.810"	SOLD EACH

E. *ULTIMA® SPEEDOMETER RECALIBRATION MODULE*

A speedometer recalibration module is required when changing the gearing or tire size on a motorcycle that doesn't have a programmable speedometer. This module adjusts the output of the speedometer sensor so that the speedometer registers the correct MPH.

17-152 Speedometer recalibration module SOLD EACH





1950 MODEL STYLE NUMBERS



1960 MODEL STYLE NUMBERS



LATE MODEL STYLE NUMBERS



57-265



57-96 CHROME PLATED

C TRANSMISSION PICKUP



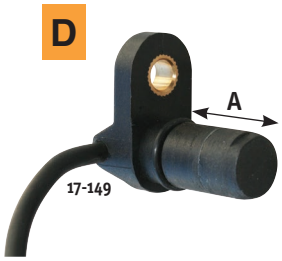



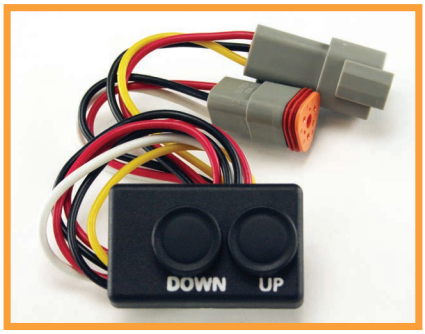

A

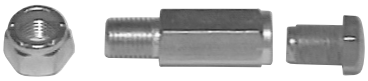

A. *DASH COVER MOUNTING CENTER SCREW & STUD KIT*

This kit features a chrome plated center screw without choke cable hole. In addition to the perfectly reproduced center screw, this kit includes the center stud and lock-nut which are cadmium plated as original. Fits all H-D® Twins 1947 and later.

21-116 Complete kit. SOLD AS KIT

B



B. *GAUGE HOUSING SCREWS FOR SUPER GLIDE® GAUGE HOUSING*

Fits our part No. **89-111** dash found on page 4-77, OEM, and all Low Rider® dash panels.

89-149 Dash screw set with 4 screws in kit. Chrome plated.

C

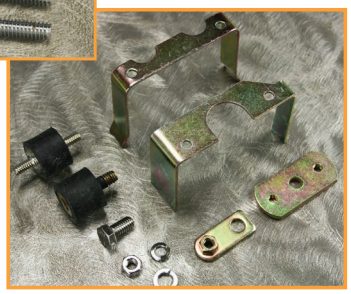

C. *GAUGE HOUSING BRACKET KIT FOR SUPER GLIDE® GAUGE HOUSING*

Dash bracket kit includes all necessary parts for proper installation. SOLD AS KIT

57-78 Kit is used when installing Fat Bob® tanks on H-D® 74" & 80" and with Super Glide® style gauges used with OEM or our part No. **89-111** dash found on page 4-77.

D



57-136

D. *SPEEDOMETER DAMPENER*

Die cut rubber dampener to help eliminate vibration so speedometer is easier to read and will last longer. Fits FL style speedometer with cast dash on Big Twin 1968 & later.

57-136 Rubber speedo dampener. SOLD EACH

E



21-132





57-77

E. *FX SPEEDO, TACH PARTS*

89-111 Housing. Fits 1977 & later FXS, FXEF, FXB, or any motorcycle using Fat Bob® tanks & Super Glide® gauges. OEM 71301-77.

21-132 Bottom trim. Rubber. Covers unsightly gap.

57-77 Reset cable and knob. Fits OEM or our part No. **89-111** dash. OEM 67210-73.

F



F. *CHROME DASH & SPEEDOMETER KIT WITH 2240:60 RATIO*

2240:60 Ratio for front wheel drive speedometer for all models with Fat Bob® tanks 1984 thru 1990, with self canceling turn signals. Includes 1989 & later speedo face, cast dash, lenses, rubber trim, hardware, ignition switch and base plate with fixed light sockets.

57-186 Chrome dash & speedo kit; 2240:60. SOLD AS KIT

G





G. *TWO LIGHT STYLE DASH KITS & PARTS*

Complete kit includes: part No. **89-110** chrome plated two light dash, part No. **86-49** two light dash red lens, two light dash mounting plate with dash bolt kit, part No. **89-233** rubber dash cover trim, light sockets, speedometer and part No. **17-45** ignition switch with both early & late model caps.

57-101 Complete two light dash kit; 2:1. SOLD AS KIT

57-103 Complete two light dash kit; 1:1.

89-110 Two light dash (lenses included). SOLD EACH

86-49 Two light dash red lens. Fits above part No. **89-110** dash.

89-233 Rubber dash trim. SOLD EACH

6-55 Instrument light Hi-Lo. OEM 68462-64. SOLD EACH

COMPLETE DASH KITS & PARTS

A. CATEYE STYLE

Complete kit includes: part No. **89-129** chrome plated cateye dash, cateye dash mounting plate with hardware and light sockets, part No. **89-233** rubber dash cover trim, speedometer and part No. **17-45** ignition switch.

89-129	Cateye dash (lenses included).	SOLD EACH
86-47	Cateye lens. Red.	SOLD EACH
89-233	Rubber dash trim.	SOLD EACH
17-57	Dimmer switch knob. OEM 71600-39.	SOLD EACH

B. THREE LIGHT STYLE

Complete kit includes; part No. **89-91** chrome plated three light dash, part No. **21-115** three light dash mounting plate with hardware and light sockets, part No. **89-233** rubber dash cover trim, speedometer and part No. **17-45** ignition switch.

89-91	Three light dash (lenses included).	SOLD EACH
89-610	Three light dash cover only. For XL electronic speedo.	SOLD EACH
21-115	Three light dash mounting plate. Fits part No. **89-91** dash. Includes wiring & sockets.	SOLD AS KIT
86-99	Replacement lens kit. Includes two red lenses & one blue lens.	SOLD AS KIT
89-233	Rubber trim.	SOLD EACH

C. '68 / '90 STYLE

Complete kit includes part No. **89-281** dash, mounting plate with hardware and light sockets, part No. **17-45** ignition switch and late style speedometer. This kit fits all Fat Bob® style tanks except Dyna Wide Glide® and bikes equipped with self-canceling turn signals. 16mm nut.

57-120	Complete late dash kit; 1:1.	SOLD AS KIT
89-281	Die cast chrome FLH style dash with lenses and switch trim for 1968 thru 1990. OEM 71241-68B.	SOLD EACH
86-102	Indicator lens & hardware only.	SOLD AS KIT
	Best quality with fixed metal bulb sockets.	
21-260	Late dash mounting plate with hardware and light sockets.	SOLD AS KIT

D. DASH KIT 1996 THRU 1999

Complete kit includes parts needed to mount late OEM electronic speedometer or Dakota Digital LED speedo.

Please Note: Speedometers not included.

57-212	Dash kit for 1996 thru 1999. Includes all parts listed below.	SOLD AS KIT
89-470	Die cast chrome dash with lens, switch trim & rubber base trim. Replaces OEM 71254-96.	SOLD EACH
89-415	Rubber base trim — both sides.	SOLD AS SET
86-119	Dash lens, OEM 71146-96.	SOLD EACH
57-213	Speedometer back clamp, OEM 67271-94.	SOLD EACH
57-214	S-bracket; mounts dash to frame. OEM 67260-96.	SOLD EACH
57-215	Rubber seal for speedo. OEM 67190-89.	SOLD EACH
57-216	Switch trim plate, OEM 71302-93.	SOLD EACH
17-115	Ignition switch for 1996 & later. OEM 71313-96.	SOLD EACH
57-217	Indicator lamp socket, OEM 67184-94.	SOLD AS KIT

CATEYE

A



89-129



89-233

B

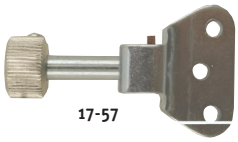

17-57

4

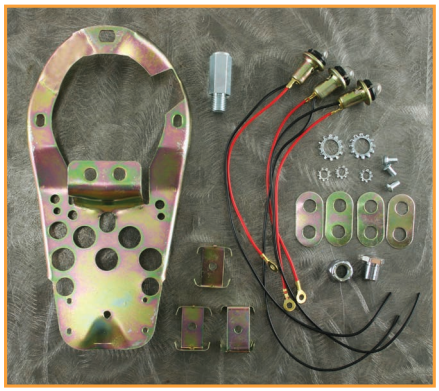

21-115

THREE LIGHT



CHROME PLATED

89-610

C

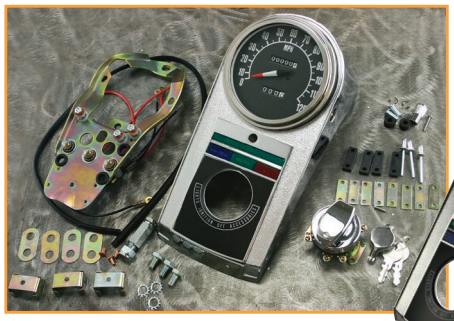

89-281

'68 / '90 STYLE

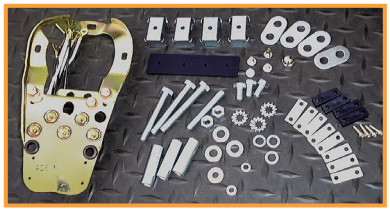

21-260

D



UNIVERSAL BRAKE LINE PROGRAM

Midwest offers a complete custom brake line program for the builder that wants to fabricate his own lines. **Midwest brake line meets D.O.T.specification FMVSS-106 — approved for street use — 50 state legal.**
High performance #3 **stainless steel** braided hose gives you the custom look you want with the performance feel you demand. Lines incorporate an inner liner and chrome plated or black female swivel fitting to be used with the listed reusable adapter fittings. All Midwest brake hoses are **clear covered** to keep braid from scratching finishes. Top quality hose and fittings are attractively packaged to make these parts fly off the shelf. And a budget price tops off the complete program!
Available in stainless steel or black stainless.





ALL PARTS SOLD EACH EXCEPT AS NOTED

BRAKE LINE PROGRAM

S.STEEL	BLACK	
49-400	49-100	9" Straight #3 x straight #3 assy.
49-495	—	10" Univ. DOT Brake Line
49-496	49-101	11" Univ. DOT Brake Line
49-401	49-102	12" Straight #3 x straight #3 assy.
49-497	—	13" Univ. DOT Brake Line
49-498	49-103	14" Univ. DOT Brake Line
49-402	49-104	15" Straight #3 x straight #3 assy.
49-499	49-105	16" Univ. DOT Brake Line
49-403	49-106	17" Straight #3 x straight #3 assy.
49-404	49-107	18" Straight #3 x straight #3 assy.
49-405	49-108	19" Straight #3 x straight #3 assy.
49-500	49-109	20" Univ. DOT Brake Line
49-406	49-110	21" Straight #3 x straight #3 assy.
49-501	—	22" Univ. DOT Brake Line
49-407	49-111	23" Straight #3 x straight #3 assy.
49-502	49-112	24" Univ. DOT Brake Line
49-408	—	25" Straight #3 x straight #3 assy.
49-409	49-113	26" Straight #3 x straight #3 assy.
49-503	—	27" Univ. DOT Brake Line
49-410	49-114	28" Straight #3 x straight #3 assy.
49-411	49-115	30" Straight #3 x straight #3 assy.
49-412	49-116	32" Straight #3 x straight #3 assy.
49-413	49-117	34" Straight #3 x straight #3 assy.
49-504	—	35" Univ. DOT Brake Line
49-505	49-118	36" Univ. DOT Brake Line
49-414	49-119	38" Straight #3 x straight #3 assy.
49-415	49-120	40" Straight #3 x straight #3 assy.
49-416	49-121	42" Straight #3 x straight #3 assy.
49-417	—	43" Straight #3 x straight #3 assy.
49-418	49-122	44" Straight #3 x straight #3 assy.
49-419	—	45" Straight #3 x straight #3 assy.
49-506	49-123	46" Univ. DOT Brake Line
49-420	49-124	47" Straight #3 x straight #3 assy.
49-507	—	48" Univ. DOT Brake Line
49-421	49-128	50" Straight #3 x straight #3 assy.
49-422	49-132	52" Straight #3 x straight #3 assy.
—	49-133	53" Univ. DOT Brake Line
49-423	49-134	54" Straight #3 x straight #3 assy.
49-424	—	56" Straight #3 x straight #3 assy.
49-425	49-135	58" Straight #3 x straight #3 assy.
49-426	49-136	60" Straight #3 x straight #3 assy.
49-508	—	61" Univ. DOT Brake Line
49-427	49-145	62" Straight #3 x straight #3 assy.
—	49-153	63" Univ. DOT Brake Line
49-428	—	64" Straight #3 x straight #3 assy.
49-429	—	66" Straight #3 x straight #3 assy.
—	49-158	67" Univ. DOT Brake Line
49-509	49-161	68" Univ. DOT Brake Line
49-510	—	69" Univ. DOT Brake Line
49-511	49-167	70" Univ. DOT Brake Line
49-512	—	71" Univ. DOT Brake Line
49-513	—	72" Univ. DOT Brake Line
—	49-172	73" Univ. DOT Brake Line
49-514	49-178	74" Univ. DOT Brake Line
49-515	—	76" Univ. DOT Brake Line
49-516	—	78" Univ. DOT Brake Line
49-517	—	80" Univ. DOT Brake Line

ALL MIDWEST UNIVERSAL BRAKE LINES ARE STAINLESS STEEL AND CLEAR COATED.

UNIVERSAL BRAKE LINE PROGRAM

Midwest offers a complete custom brake line program for the builder that wants to fabricate his own lines. Midwest brake line meets D.O.T. specification FMVSS-106 — approved for street use — 50 state legal. High performance #3 stainless braided hose gives you the custom look you want with the performance feel you demand. Lines incorporate an inner liner and chrome plated female swivel fitting to be used with the listed reusable adapter fittings. All Midwest brake hoses are clear covered to keep braid from scratching finishes. Top quality hose and fittings are attractively packaged to make these parts fly off the shelf. And a budget price tops off the complete program!

CHROME		BLACK
BANJO FITTINGS		
21-403	10mm Banjo x #3 male straight.	21-426
21-404	10mm Banjo x #3 male 35°.	21-431
21-406	10mm Banjo x #3 male 90°	21-448
90-699	10mm Single banjo 3/8 - 24.	21-464
90-744	Double banjo with crush washers 3/8 - 24.	
90-743	Banjo with crush washers 7/16 - 24.	21-465
21-407	12mm Banjo x #3 male straight.	21-427
21-420	12mm Banjo x #3 male 35°.	21-447
21-408	12mm Banjo x #3 male 90°.	21-449
90-968	Rear banjo, 1/8" NPT 35°.	
21-435	Rear brake tee #3 male with 1/8" NPT female.	
90-940	Male junction block #3 Front Wide Glide®.	
90-941	Male junction block #3 Front Narrow Glide®.	
21-419	Brake switch banjo bolt. 3/8 - 24.	
21-619	Brake switch banjo bolt. 7/16 - 24.	
ADAPTER FITTINGS		
21-409	#3 x 1/8" male NPT straight.	
21-410	#3 Male x 1/8" male NPT 90°.	
21-415	#3 Male x 1/8" male NPT 45°.	
21-416	#3 Male tee.	
21-428	Universal front brake tee 3/8 - 24.	
21-418	#3 Male x 3/8 - 24 inverted flare male straight (card of two).	21-463
21-434	#3 Inverted flare 3/8 - 24 90° to 120°.	21-460
21-436	#3 Flare union for rear calipers.	
90-936	Banjo bolt adapter.	
	Tube adapter 60°.	21-459
BENT TUBE FITTINGS		
21-411	H-D® 3/8 - 24 inverted flare male x #3 male 45°.	21-458
21-412	H-D® 3/8 - 24 inverted flare male x #3 male 90° short.	21-461
21-413	H-D® 3/8 - 24 inverted flare male x #3 male 90° long.	21-462
21-414	H-D® 3/8 - 24 inverted flare male x #3 male 150°.	21-457

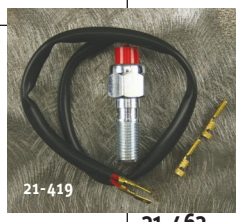

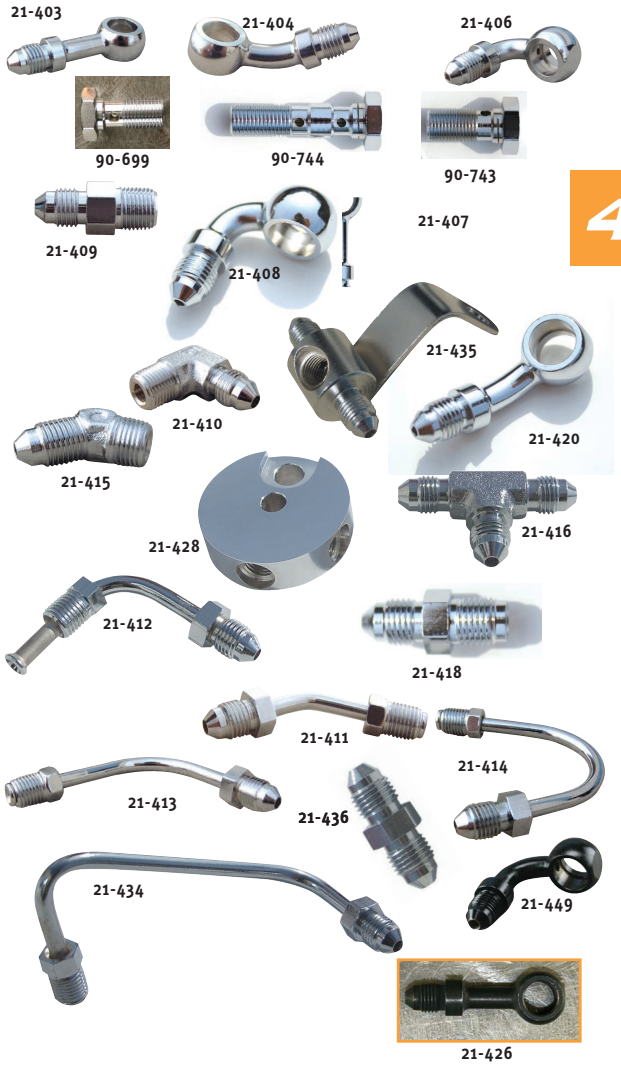

ATTRACTIVELY PACKAGED CLAMSHELL FOR DISPLAY



90-936



90-940



90-941



SEE SECTION 8 FOR MATCHING CROSSOVER FUEL LINES & PRE-ASSEMBLED OIL LINES

CUSTOM BRAKE LINE KITS

Midwest offers complete custom brake line kits for the easy for the shop to stock. Midwest brake line meets D.O.T. specification FMVSS-106 — approved for street use — 50 state legal. High performance #3 stainless braided hose gives you the custom look you want with the performance feel you demand. Lines incorporate an inner liner and chrome plated fittings. All Midwest brake hoses are clear covered to keep braid from scratching finishes. Top quality hose and fittings are attractively packaged to make these parts fly off the shelf. And a budget price tops off the complete program!

SOLD AS KIT

BRAKE LINE KITS

SPORTSTER® FRONT 1988/08

MODEL	YEAR	MIDWEST#
XL50	2007	**47-506**
XL883	2004-09	**47-507**
XL883L / XL1200L	2005-09	**47-508**
XLH Standard 86-03	1986-03	**41-653**
XLH883 Deluxe	1986-91	**41-653**
XLH883 Hugger	1996-03	**41-653**
XLH883C	1996-03	**41-653**
XLH1200 / XL 1200C	1996-03	**41-653**
XLH1200 / XL 1200C	1988-95	**41-495**

SPORTSTER® TRI FRONT 1996/08

MODEL	YEAR	MIDWEST#
XL1200S	1996-03	**41-655**
XL1200R / XL883R	2004-09	**47-509**

SPORTSTER® REAR 1987/08

MODEL	YEAR	MIDWEST#
XL Models	2004-09	**47-510**
XL Models	1987-03	**41-639**

SOFTAIL® FRONTS 1984/08

MODEL	YEAR	MIDWEST#
FLST / FLTSC / FLSTF	L1986-08	**41-637**
FLSTS	1997-03	**41-636**
FLSTSC	2005-07	**47-511**
FLSTN	2005-09	**47-512**
FXST	1984-90,99-07	**41-497**
FXSTC	2007-08	**47-513**
FXSTC	1984-99	**41-497**
FXSTS	1988-06	**47-514**
FXSTB	L1998-09	**41-638**
FXSTD	2000-07	**41-497**

SOFTAIL® REARS 1987/07

MODEL	YEAR	MIDWEST#
All Models	2008-09	**47-515**
FLSTC / FLSTN / FLSTSC	2007	**47-516**
FLSTC / FLSTF / FLSTN / FLSTS	2000-06	**41-631**
FXST/ FXSTC / FXSTB	2007	**47-517**
FXST/ FXSTS / FXSTB	2000-05	**41-631**
FXSTD	2000-06	**41-631**
FXST	2000-06	**41-635**
FXSTS	2006	**41-635**
FXSTB	2006	**41-635**
FLST/C/S/F	L1987-99	**41-630**
FXST/C/B/S/SB	L1987-99	**41-632**

DYNA® FRONTS 1993/08

MODEL	YEAR	MIDWEST#
FXDWG Dyna Wide Glide®	1993-05	**47-518**
FXD/C	2000-05	**41-494**
FXDB	2006-09	**47-519**
FXDL / FXD / FXDC	2006-09	**47-520**
FXDWG	2006-08	**47-521**
FXD	1995-99	**47-522**
FXDL	1996-00	**41-498**
FXDL	2001-05	**41-492**
FXR / FXRS	1988-94	**47-523**

BRAKE LINE KITS

DYNA® TRI FRONT 1992/05

MODEL	YEAR	MIDWEST#
FXDF	2008-09	**47-524**
FXD/B/C/L/S-CON	1992-00	**41-496**
FXRS-CON	1989-93	**41-496**
FXDX	1999-05	**41-499**

DYNA® REAR 1991/08

MODEL	YEAR	MIDWEST#
FXD	2008-09	**47-525**
FXD	2000-07	**41-493**
FXD	1991-99	**47-526**

FLT / FLH TRI FRONT 1996/08

MODEL	YEAR	MIDWEST#
FLHT/C/CU	1996-07	**47-527**
FLHX	2006-07	**47-527**
FLHR/FLTR	1994-07	**41-656**
FLHRS	2004-07	**41-656**
FLHT / FLT -ALL	2008-09	**47-529**

FLH / FLT REAR 1997/07

MODEL	YEAR	MIDWEST#
FLH/FLT	1997-07	**47-530**







CLEAR COATED 308 STAINLESS STEEL #3 BRAIDED BRAKE HOSE

PTFE INNER LINER

CRIMPED-ON PLATED END FITTINGS

RUSSELL™ STREET LEGAL™ (DOT) & CYCLEFLEX® (NON-DOT) BRAKE LINE KITS FOR H-D® — FRONT AND REAR®

All kits are preassembled using a clear coated #3 hose equipped with a 308 stainless steel outer braid over a PTFE inner liner for smooth fluid transfer and a high burst strength of 15,000 PSI. End fittings are zinc plated to prevent corrosion. **NOTE: Street Legal™ Brake Line Kits marked with an asterisk * meet DOT MVSS-106 requirements and are legal in all 50 states. Unless specified, all other kits are non-DOT.** Don't forget Russell™ Stainless steel brake line fittings and programs in this section!

YEAR	MODEL	HOSE PER FRONT KIT	FRONT KIT PART NO.	FRONT KIT OEM NO.	HOSE PER REAR KIT	REAR KIT PART NO.	REAR KIT OEM NO.
XL Models							
2004/2007	XL 883 Standard	1	—		1	**49-349**	
2005/2007	XL 883R	1	**49-348**		1	**49-349**	
2004/2007	XL 1200C Custom	1	—		1	**49-349**	
2007	XL 50 50th Anniversary	1	—		1	**49-349**	
2004/2007	XL 1200R Roadster	1	**49-348**		1	**49-349**	
2000/2003	XL 1200S Sport.	3	—		1	**49-600**	
2000/2003	XLH 1200C Custom.	1	—		1	**49-600**	
Dyna Glide® Models							
2000	FXDX	3	**49-604**		1	—	
2000	FXDXT	3	**49-604**		1	—	
2006/2007	FXDBI (Street Bob).	1	**49-350**		1	—	
FX Models							
2000	FXSTD Deuce.	1	**49-603**	—	1	—	

NOTE: Street Legal™ Brake Line Kits marked with an asterisk * meet DOT MVSS-106 requirements and are legal in all 50 states. Unless specified, all other kits are non-DOT.

SOLD AS KIT

A. *PRO SYSTEM I BIKE BUILDERS KIT COMPOMENTS*

PART NO.	DESCRIPTION	QTY. INCLUDED IN KIT **49-330**
90-662	3/8" - 24 inverted flare.	2
90-377	10mm Single banjo bolt 3/8" - 24.	16
90-305	10mm Crush washer.	3
90-345	12mm Crush washer.	1



B. *BANJO BOLTS*

90-377 Fits master cylinders with 10mm brake line. OEM 41747-82A. Includes two crush washers. **U.S.A. MADE.** SOLD EACH

90-699 Fits master cylinders with 10mm brake line. 3/8-24 x 13/16 (short). For use on Chrome Horse® II calipers & others. Bolt only. Chrome plated. **U.S.A. MADE.**

90-378 Fits master cylinders with 12mm brake line. OEM 41739-84A. Includes two crush washers. Chrome plated. **U.S.A. MADE.**

90-390 Banjo adapter bolt, 10mm threads using 12mm line. Comes with two aluminum gaskets. Chrome plated. **U.S.A. MADE.**



C. *BRAKE SWITCH BANJO BOLT*

21-419 Banjo bolt w/built-in brake switch, 3/8-24 thread. SOLD EACH

21-619 Banjo bolt w/built-in brake switch, 7/16-24 thread. SOLD EACH



D. *O-RING WASHERS*

O-Ring washers for brake lines with banjo fittings.

90-431 10mm. Replaces OEM 41731-88A. SOLD EACH

90-432 12mm. Replaces OEM 41733-88.

CHECK QTY. DISCOUNT FOR BEST PRICE



A. *BRAKE LINE TEES*

Chrome plated brake line tee fittings.

90-347 Front: FX 1978 thru early 1979 except FXS, and XL 1978 thru early 1979 except XLCR. Replaces OEM 43308-78. SOLD EACH

90-348 Front: FXWG 1980 thru 1982, XLH & XLS 1982, and FXR & FXRS 1982 thru early 1983. Replaces OEM 44311-80. Not shown.

90-349 Front: FXS early 1977, FX late 1979 thru 1982 except FXWG, XLCR 1977 & 1978, and XL late 1979 thru 1981. Replaces OEM 44310-77.

90-350 Rear: FL 1958 thru 1969. Replaces OEM 83566-51.

90-351 Rear: FL without sidecar late 1972 thru 1984, FX late 1972 and 1978 thru 1985, FXWG 1980 thru 1986, Softail® 1984 thru early 1987, and XL 1980 thru 1985. Replaces OEM 42318-72. Not shown.

90-352 Rear: FX 1971 thru early 1972, and FL with sidecar 1970 thru 1984. Replaces OEM 42309-70.

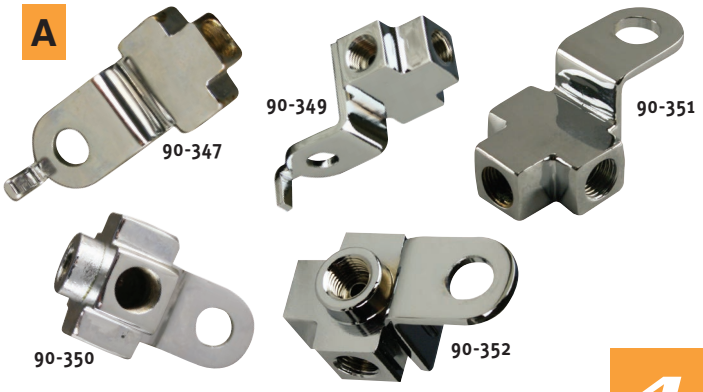

4

B. *TAPER TOP ALLEN BRAKE LINE BANJO BOLTS*

Polished banjo bolts are **U.S.A. MADE**.

90-262 Front, 1984 & later, 7/16 x 24. Replaces OEM 41739-84A. SOLD EACH

90-263 Front and/or Rear, 1982 & later. 3/8 x 24. Replaces OEM 41747-82A.

90-264 Rear brake wheel cylinder, 1958 thru 1972. 3/8 x 24.

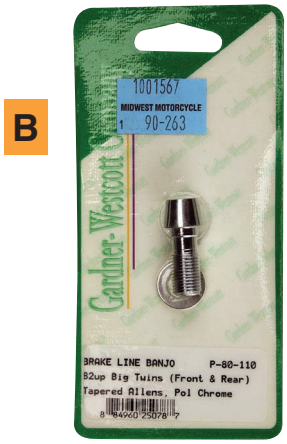

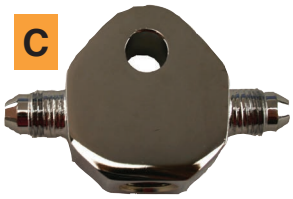

C. *CHROME STEEL BRAKE LINE TEES*

Chrome steel brake tees. Mounting hole size: 5/16".

90-627 Center hole inverted flare 3/8"-24 UNF and side tubes 3/8"-24 UNF. SOLD EACH

90-628 Center hole 1/8"-27 NPT, side tubes 3/8"-24 UNF.

90-629 Center hole and side tubes 1/8"-27 NPT.

D. *REPLACEMENT CRUSH WASHERS*

90-305 10mm. SOLD AS PKG OF 6

90-345 12mm. SOLD AS PKG OF 6



E. *CUSTOM BRAKE LINE TEES*

Chrome plated custom brake tees with groove design.

90-446 Front. Three inverted flare ends. Replaces OEM 44310-77 and 44311-80. SOLD EACH

90-447 Rear. Two side inverted flares and one 1/8" NPT in center. Replaces OEM 43308-78 and 42318-72.

90-448 Universal. Three 1/8" NPT ends.



F. *HANDLEBAR MASTER CYLINDER FITTINGS*

90-329 90° Right angle inverted flare, male end 1/8 pipe thread. Fits 1971 thru 1981. OEM 43307-78. SOLD EACH

90-353 Straight. Inverted flare, male end 1/8 pipe thread. OEM 63609-72.



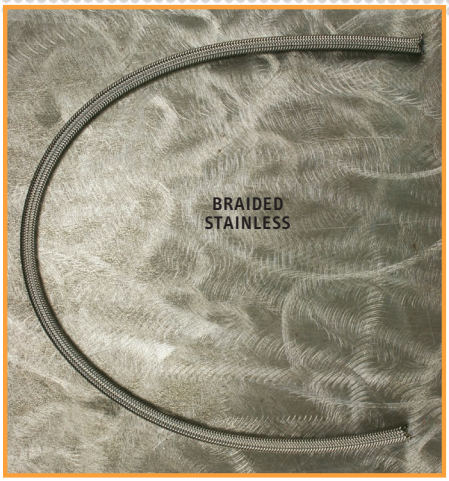

BRAIDED STEEL BRAKE HOSE

Make your own custom brake hose for H-D® with these braided steel hose and hose ends. The stiffness of the liner, combined with the resistance of the stainless steel braided outer cover, dramatically reduces line expansion under pressure, resulting in firmer brake lever or pedal pressure. **See below for hose ends.**

48-372 Braided steel brake hose. SOLD BY FOOT

TACHOMETER CABLE FOR SPORTSTER® 1974 THRU 1980 STAINLESS STEEL

Tach cable. OEM 92065-74.

48-665 Stainless steel cable. SOLD EACH

4

SINGLE THROTTLE CABLES FOR BIG TWIN & SPORTSTER®
1976 THRU 1980 WITH STOCK CARB

HOUSING LENGTH	ELBOW FITTING BEND	YEAR	APPLICATION	THROTTLE OEM NO.
32.5"	90°	1976 thru 1980	FX	56313-76
		1976 thru 1980	FL	
		1976 thru 1980	Sportster®	

ALL CABLES SOLD EACH

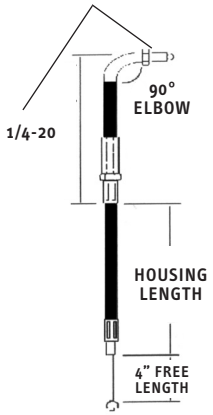

Fits Big Twin & Sportster® 1976 thru 1980 with stock style throttle grip and Keihin carb.

BEND — LENGTH	THROTTLE 90° - 32.5" (OEM 56313-76)
Midwest — Black	**48-306**

DUAL THROTTLE CABLES
FOR BIG TWIN 1990 THRU 1995 WITH STOCK CARB

HOUSING LENGTH	ELBOW FITTING BEND	YEAR	APPLICATION	THROTTLE OEM NO.	IDLE OEM NO.
30"	90°	1990 thru 1995	FXR & Softail®	56343-90	56342-90
		1990 thru 1995	Softail® (except Springer®)		
		1991 thru 1995	Dyna®		
36"	90°	1990 thru 1995	Softail®	56306-90	56305-90
38"	90°	1990 thru 1995	FLT	56327-90	56328-90
44"	90°	1994 & 1995	FLHR	56375-94	56374-90

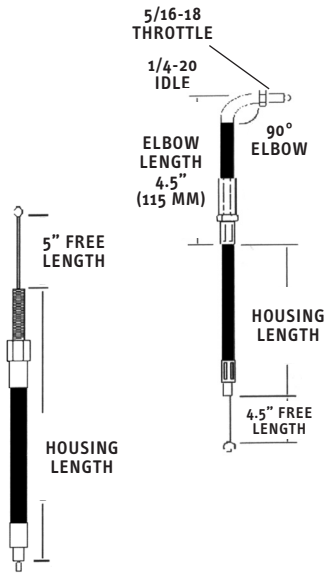

Fits Big Twin 1981 thru 1995 with stock style dual throttle and CV carb.

BEND — LENGTH	THROTTLE 90° — 36" (OEM 56306-90)	IDLE (OEM 56305-90)	THROTTLE `90° — 38" (OEM 56327-90)	IDLE (OEM 56328-90)
Import — Stainless	**48-802**	**48-805**	—	**48-803**

A. *STAINLESS STEEL CUSHIONED CLAMPS FOR HOSE OR CABLE*

U.S.A. MADE loom clamps are made of stainless steel with a removable rubber cushion which protects the loom or cable. The mounting hole is 1-7/64" for 1/4" screws or bolts. A premium clamp.

PART NO.	SIZE CLOSED I.D.	RECOMMENDED FOR MOUNTING LINES WITH FOLLOWING O.D.'S MINIMUM	MAXIMUM
66-210	1/4"	3/16"	1/4"
66-76	3/8"	1/4"	3/8"
66-211	1/2"	3/8"	1/2"
66-212	5/8"	1/2"	5/8"

SOLD EACH

CHECK QTY. DISCOUNT FOR BEST PRICE

B. *DIE CAST CABLE CLAMPS*

Two piece cable clamp designed with 1/4" opening to mount clutch, throttle and brake cable to various diameters of tubing. SOLD EACH

SINGLE THROTTLE CABLE CLAMPS

45-36	Fits 1" tubing.	**45-48**	Fits 1-1/2" tubing.
45-37	Fits 1-1/8" tubing.	**45-49**	Fits 1-3/4" tubing.
45-38	Fits 1-1/4" tubing.	**45-50**	Fits 2" tubing.
45-47	Fits 1-3/8" tubing.	**45-51**	Fits 49mm tubing.

DUAL THROTTLE CABLE CLAMPS

45-52 Fits 1" tubing.
45-53 Fits 1.25" tubing.

C. *BRAKE LINE CLAMP*

Clamp for all models with a 1/4 - 20 threaded hole in the bottom of fork stem.

90-805 Brake line clamp. SOLD EACH

D. *BILLET FORK TUBE BRAKE HOSE CLAMP*

Billet clamp snaps on 41mm fork tubes and holds hose in place for a clean look. Use one or two depending on fork length.

45-1 Brake hose clamp. SOLD EACH

E. *CLUTCH CABLE ADJUSTER COVER*

This die cast, chrome plated cover installs over clutch cable adjuster utilizing 2 snap rings allowing installation without the need to remove clutch cable.

45-40 Fits all Big Twin late 1987 & later and all Sportster® from 1988 & later. SOLD EACH

F. *CABLE END COVERS*

Get rid of the ugly look of the speedo, tach and clutch cable fittings with these ball milled chrome plated die cast covers.

SPEEDO / TACH CABLE

45-46 Upper cover used on 12mm cable nuts. SOLD EACH

CLUTCH CABLE

45-41 Upper cover used on all models 1982 & later. SOLD EACH
45-44 Lower cover used on Softail®, Dyna® and FLT models, 1987 & later.

A



U.S.A. MADE

B



CHROME PLATED

4



C



CHROME PLATED

D





E



F



CHROME PLATED

ULTIMA CABLES

Please see your Dealer for precise application.

Lubricate cables before use with genuine cable lubricant.

Ultima® Products

ULTIMA® THROTTLE & IDLE CABLES
BRAIDED & BLACK VINYL

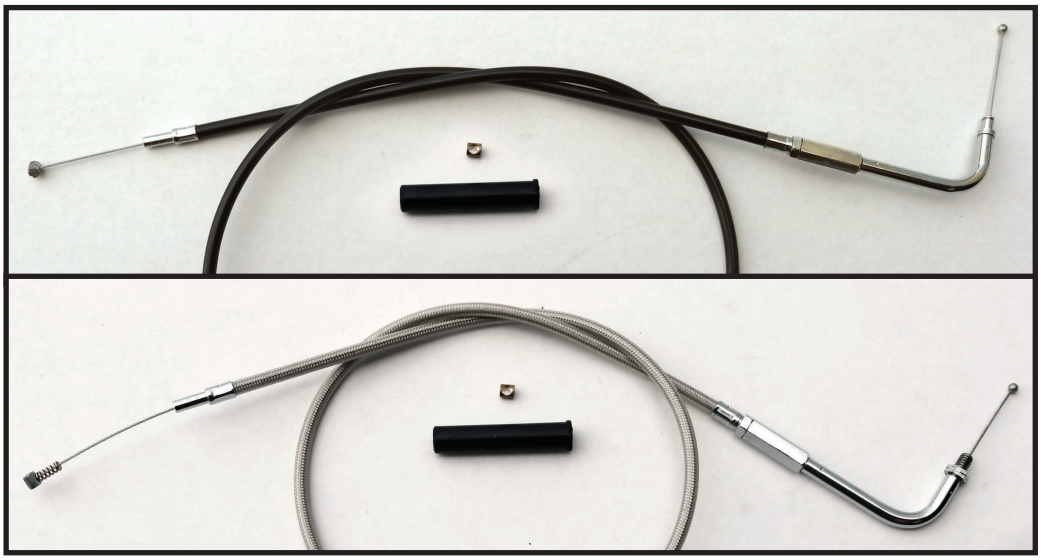

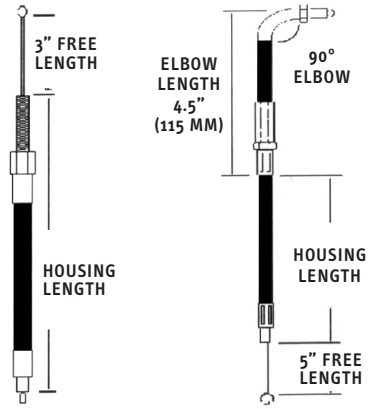

Ultima Cables feature polished chrome fittings. Available Black Vinyl outer casing or Stainless-steel braiding. Cables have tempered steel inner conduit and an inner nylon liner for smooth operation and extended life.

Braided cables feature an abrasion resistant outer housing coated with a non-yellowing clear covering.

REPLACEMENT CABLE CLIPS

48-298 Ultima cable clip small, Idle. SOLD EACH
48-299 Ultima cable clip large, Throttle

Fits Models Dresser Models	Braided Throttle Part #	Black Vinyl Throttle Part #	Length	Elbow	Travel	OEM #	Braided Idle Part #	Black Vinyl Idle Part #	Length	Elbow	Travel	Cruise Ready	OEM #
96-07 FLHR	48-110	48-114	42 ½"	90°	5 ¼"	56379-97	* 48-157	*48-162	42 ½"	90°	4 ½"	N	56368-96
96-97 FLHR/I	48-110	48-114	42 ½"	90°	5 ¼"	56379-97	* 48-157	*48-162	42 ½"	90°	4 ½"	N	56368-96
98-01 FLHRC/I	48-110	48-114	42 ½"	90°	5 ¼"	56379-97	* 48-157	*48-162	42 ½"	90°	4 ½"	N	56368-96
02-07 FLHT	48-100	48-105	39 ½"	70°	5"	56526-02	* Cables do not come with compression spring per OEM specs.						
96-01 FLHT	48-101	48-106	38"	70°	5"	56327-96	48-158	48-163	38"	70°	4 ¾"	N	56328-96
95 FLHT	48-111	48-115	38"	70°	5"	56327-90	48-159	48-164	38"	70°	4 ¾"	N	56328-90
84-87 FLHT	48-104	48-109	42 ½"	70°	3 ¾"	56327-81B	48-151	48-154	42 ½"	70°	4"	N	56328-81B
03-07 FLHT/I	48-100	48-105	39 ½"	70°	5"	56526-02							
02-07 FLHTC	48-100	48-105	39 ½"	70°	5"	56526-02							
96-01 FLHTC	48-101	48-106	38"	70°	5"	56327-96	48-158	48-163	38"	70°	4 ¾"	N	56328-96
90-95 FLHTC	48-111	48-115	38"	70°	5"	56327-90	48-159	48-164	38"	70°	4 ¾"	N	56328-90
84-89 FLHTC	48-104	48-109	42 ½"	70°	3 ¾"	56327-81B	48-151	48-154	42 ½"	70°	4"	N	56328-81B
02-07 FLHTC/I	48-100	48-105	39 ½"	70°	5"	56526-02							
96-98 FLHTCU	48-101	48-106	38"	70°	5"	56327-96							
90-95 FLHTCU	48-111	48-115	38"	70°	5"	56327-90	48-159	48-164	38"	70°	4 ¾"	N	56328-90
87-89 FLHTCU	48-104	48-109	42 ½"	70°	3 ¾"	56327-81B	48-151	48-154	42 ½"	70°	4"	N	56328-81B
02-07 FLHTCU/I	48-100	48-105	39 ½"	70°	5"	56526-02							
90-95 FLTCU	48-111	48-115	38"	70°	5"	56327-90	48-159	48-164	38"	70°	4 ¾"	N	56328-90
02-04 FLTR	48-100	48-105	39 ½"	70°	5"	56526-02							
98-01 FLTR	48-101	48-106	38"	70°	5"	56327-96							
02-07 FLTR/I	48-100	48-105	39 ½"	70°	5"	56526-02							
90-93 FLHS	48-111	48-115	38"	70°	5"	56327-90	48-159	48-164	38"	70°	4 ¾"	N	56328-90
87-89 FLHS	48-104	48-109	42 ½"	70°	3 ¾"	56327-81B	48-151	48-154	42 ½"	70°	4"	N	56328-81B
06-07FLHX/I	48-100	48-105	39 ½"	70°	5"	56526-02							
90-91 FLTC	48-111	48-115	38"	70°	5"	56327-90	48-159	48-164	38"	70°	4 ¾"	N	56328-90
84-89 FLTC	48-104	48-109	42 ½"	70°	3 ¾"	56327-81B	48-151	48-154	42 ½"	70°	4"	N	56328-81B
84-86 FLT	48-104	48-109	42 ½"	70°	3 ¾"	56327-81B	48-151	48-154	42 ½"	70°	4"	N	56328-81B

THROTTLE & IDLE CABLES BRAIDED & BLACK VINYL

Fits Models	Braided Throttle Part #	Black Vinyl Throttle Part #	Length	Elbow	Travel	OEM #	Braided Idle Part #	Black Vinyl Idle Part #	Length	Elbow	Travel	Cruise	OEM #
SOFTAIL MODELS													
14-15 FXSB	48-103	48-108	30 ¾"	90°	5"	561000-56	48-150	48-153	30 ¾"	90°	4 ¾"	N	270000-04
08-11 FXCW/FXCWC	48-103	48-108	30 ¾"	90°	5"	56343-01	48-150	48-153	30 ¾"	90°	4 ¾"	N	56342-01
01-10 FXST/I	48-103	48-108	30 ¾"	90°	5"	56343-01	48-150	48-153	30 ¾"	90°	4 ¾"	N	56342-01
99-00 FXST	48-103	48-108	30 ¾"	90°	5"	56356-96	48-150	48-153	30 ¾"	90°	4 ¾"	N	56342-96
90 FXST	48-112	48-116	30"	90°	5"	56343-90	48-156	48-161	30"	90°	4 ¾"	N	56342-90
07-10 FXSTC	48-102	48-107	32 ½"	90°	5"	56356-96	48-152	48-155	31 ¾"	90°	4 ¾"	N	56355-96
96-99 FXSTC	48-103	48-108	30 ¾"	90°	5"	56356-96	48-150	48-153	30 ¾"	90°	4 ¾"	N	56342-96
90-95 FXSTC	48-112	48-116	30"	90°	5"	56343-90	48-156	48-161	30"	90°	4 ¾"	N	56342-90
00-07 FXSTD/I	48-103	48-108	30 ¾"	90°	5"	56343-01	48-150	48-153	30 ¾"	90°	4 ¾"	N	56342-01
04-07 FXSTS/I	48-103	48-108	30 ¾"	90°	5"	56343-01	48-150	48-153	30 ¾"	90°	4 ¾"	N	56342-01
96-97 FXSTSB	48-103	48-108	30 ¾"	90°	5"	56356-96	48-150	48-153	30 ¾"	90°	4 ¾"	N	56342-96
95 FXSTSB	48-112	48-116	30"	90°	5"	56343-90	48-156	48-161	30"	90°	4 ¾"	N	56342-90
10-15 FLSTFB	48-103	48-108	30 ¾"	90°	5"	56343-01	48-150	48-153	30 ¾"	90°	4 ¾"	N	56342-01
01-15 FLSTC/I	48-103	48-108	30 ¾"	90°	5"	56343-01	48-150	48-153	30 ¾"	90°	4 ¾"	N	56342-01
12-15 FLS	48-103	48-108	30 ¾"	90°	5"	56343-01	48-150	48-153	30 ¾"	90°	4 ¾"	N	56342-01
96-00 FLSTC	48-103	48-108	30 ¾"	90°	5"	56356-96	48-150	48-153	30 ¾"	90°	4 ¾"	N	56342-96
90-95 FLSTC	48-112	48-116	30"	90°	5"	56343-90	48-156	48-161	30"	90°	4 ¾"	N	56342-90
90 FLST	48-112	48-116	30"	90°	5"	56343-90	48-156	48-161	30"	90°	4 ¾"	N	56342-90
01-15 FLSTF/I	48-103	48-108	30 ¾"	90°	5"	56343-01	48-150	48-153	30 ¾"	90°	4 ¾"	N	56342-01
96-00 FLSTF	48-103	48-108	30 ¾"	90°	5"	56356-96	48-150	48-153	30 ¾"	90°	4 ¾"	N	56342-90
90-95 FLSTF	48-112	48-116	30"	90°	5"	56343-90	48-156	48-161	30"	90°	4 ¾"	N	56342-90
05-15 FLSTN/I	48-103	48-108	30 ¾"	90°	5"	56343-01	48-150	48-153	30 ¾"	90°	4 ¾"	N	56342-01
96 FLSTN	48-103	48-108	30 ¾"	90°	5"	56356-96	48-150	48-153	30 ¾"	90°	4 ¾"	N	56342-96
93-95 FLSTN	48-112	48-116	30"	90°	5"	56343-90	48-156	48-161	30"	90°	4 ¾"	N	56342-90
01-03 FLSTS/I	48-103	48-108	30 ¾"	90°	5"	56343-01	48-150	48-153	30 ¾"	90°	4 ¾"	N	56342-01
97-00 FLSTS	48-103	48-108	30 ¾"	90°	5"	56356-96	48-150	48-153	30 ¾"	90°	4 ¾"	N	56342-96

Fits Models	Braided Throttle Part #	Black Vinyl Throttle Part #	Length	Elbow	Travel	OEM #	Braided Idle Part #	Black Vinyl Idle Part #	Length	Elbow	Travel	Cruise	OEM #
DYNA GLIDE MODELS													
12-16 FLD	48-103	48-108	30 ¾"	90°	5"	56421-06	48-150	48-153	30 ¾"	90°	4 ¾"	N	56415-06
96-05 FXD	48-102	48-107	32 ½"	90°	5"	56356-96	48-152	48-155	31 ¾"	90°	4 ¾"	N	56355-96
02-05 FXD/I	48-102	48-107	32 ½"	90°	5"	56356-96	48-152	48-155	31 ¾"	90°	4 ¾"	N	56355-96
95 FXD	48-113	48-117	32 ½"	90°	5"	56356-92	48-160	48-165	31 ¾"	90°	4 ¾"	N	56355-92
99-05 FXDX	48-102	48-107	32 ½"	90°	5"	56356-96	48-152	48-155	31 ¾"	90°	4 ¾"	N	56355-96
02-05 FXDX/I	48-102	48-107	32 ½"	90°	5"	56356-96	48-152	48-155	31 ¾"	90°	4 ¾"	N	56355-96
01-03 FXDXT	48-102	48-107	32 ½"	90°	5"	56356-96	48-152	48-155	31 ¾"	90°	4 ¾"	N	56355-96
10-16 FXDWG	48-103	48-108	30 ¾"	90°	5"	56421-06	48-150	48-153	30 ¾"	90°	4 ¾"	N	56415-06
96-08 FXDWG/I	48-102	48-107	32 ½"	90°	5"	56356-96	48-152	48-155	31 ¾"	90°	4 ¾"	N	56355-96
01-02 FXDWG 2/3	48-103	48-108	30 ¾"	90°	5"	56343-01	48-150	48-153	30 ¾"	90°	4 ¾"	N	56408-01
93-95 FXDWG	48-113	48-117	32 ½"	90°	5"	56356-92	48-160	48-165	31 ¾"	90°	4 ¾"	N	56355-92
15-16 FXDL	48-103	48-108	30 ¾"	90°	5"	56343-01	48-150	48-153	30 ¾"	90°	4 ¾"	N	56415-06
06-12 FXDL/I	48-103	48-108	30 ¾"	90°	5"	56343-01	48-150	48-153	30 ¾"	90°	4 ¾"	N	56415-06
96-05 FXDL	48-102	48-107	32 ½"	90°	5"	56356-96	48-152	48-155	31 ¾"	90°	4 ¾"	N	56355-96
93-95 FXDL	48-113	48-117	32 ½"	90°	5"	56356-92	48-160	48-165	31 ¾"	90°	4 ¾"	N	56355-92
96-00 FXDS-Conv.	48-102	48-107	32 ½"	90°	5"	56356-96	48-152	48-155	31 ¾"	90°	4 ¾"	N	56355-96
94-95 FXDS Conv.	48-113	48-117	32 ½"	90°	5"	56356-92	48-160	48-165	31 ¾"	90°	4 ¾"	N	53355-92
06-16 FXDB w/ base mini apes	48-102	48-107	32 ½"	90°	5"	56356-96A	48-152	48-155	31 ¾"	90°	4 ¾"	N	56355-96A
92 FXDB	48-113	48-117	32 ½"	90°	5"	56356-92	48-160	48-165	31 ¾"	90°	4 ¾"	N	56355-92
91 FXDB	48-112	48-116	30"	90°	5"	56343-90	48-156	48-161	30"	90°	4 ¾"	N	56342-90
92 FXDC	48-113	48-117	32 ½"	90°	5"	56356-92	48-160	48-165	31 ¾"	90°	4 ¾"	N	56355-92
06 FXD35	48-103	48-108	30 ¾"	90°	5"	56343-01	48-150	48-153	30 ¾"	90°	4 ¾"	N	56415-06

Fits Models	Braided Throttle Part #	Black Vinyl Throttle Part #	Length	Elbow	Travel	OEM #	Braided Idle Part #	Black Vinyl Idle Part #	Length	Elbow	Travel	Cruise	OEM #
FXR MODELS													
90-94 FXLR	48-112	48-116	30"	90°	5"	56343-90	48-156	48-161	30"	90°	4 ¾"	N	56342-90
90-94 FXR	48-112	48-116	30"	90°	5"	56343-90	48-156	48-161	30"	90°	4 ¾"	N	56342-90
90-92 FXRS	48-112	48-116	30"	90°	5"	56343-90	48-156	48-161	30"	90°	4 ¾"	N	56342-90
90-93 FXRS-Conv.	48-112	48-116	30"	90°	5"	56343-90	48-156	48-161	30"	90°	4 ¾"	N	56342-90
90-93 FXRS-SP	48-112	48-116	30"	90°	5"	56343-90	48-156	48-161	30"	90°	4 ¾"	N	56342-90
90-92 FXRT	48-112	48-116	30"	90°	5"	56343-90	48-156	48-161	30"	90°	4 ¾"	N	56342-90

CLUTCH CABLES
BRAIDED & BLACK VINYL

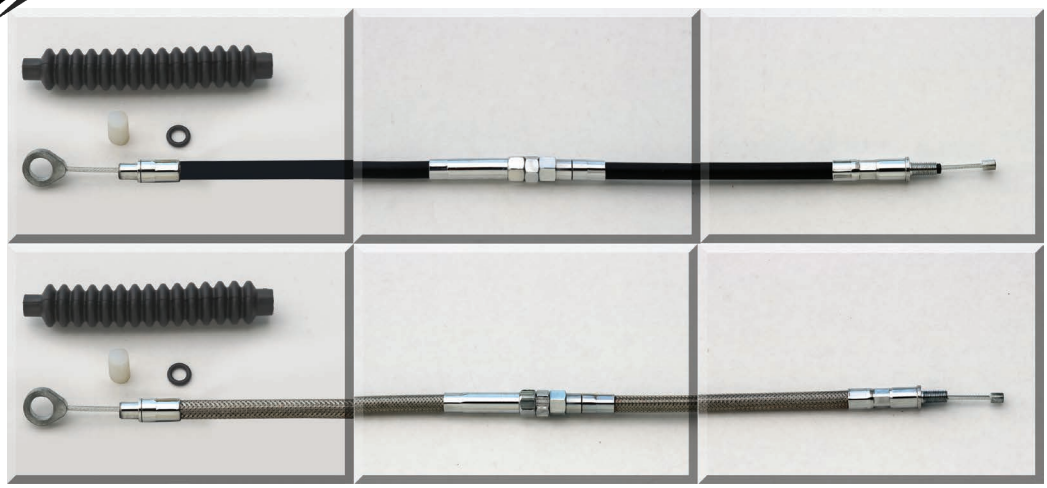

Fits Models	Braided Part #	Black Vinyl Part #	Housing Length	Adjuster Location From Trans	Inner Cable Travel	OEC Part #
DRESSER MODELS						
07 FLHRS	48-210	48-214	62-11/16”	25-7/16”	3-1/4”	38667-07
08-16 FLHR	48-202	48-207	62-11/16”	25-7/16”	3-7/8”	38667-08A
07 FLHRS	48-210	48-214	62-11/16”	25-7/16”	3-1/4”	38667-07
94-06 FLHR	48-203	48-208	62-11/16 “	25-7/16”	2-3/4”	38601-89
00-06 FLHR/I	48-203	48-208	62-11/16 “	25-7/16”	2-3/4”	38667-00
96-97 FLHR/I	48-203	48-208	62-11/16 “	25-7/16”	2-3/4”	38601-89
08-13 FLHRC	48-202	48-207	62-11/16”	25-7/16”	3-7/8”	38667-08A
07 FLHRC	48-210	48-214	62-11/16”	25-7/16”	3-1/4”	38667-07
98-06 FLHRC/I	48-203	48-208	62-11/16 “	25-7/16”	2-3/4”	38667-00
08-11 FLHRSE	48-202	48-207	62-11/16”	25-7/16”	3-7/8”	38667-08A
07 FLHRSE	48-210	48-214	62-11/16”	25-7/16”	3-1/4”	38667-07
02-04 FLHRSE/I	48-203	48-208	62-11/16 “	25-7/16”	2-3/4”	38667-00
08-13 FLHT	48-202	48-207	62-11/16”	25-7/16”	3-7/8”	38667-08A
07 FLHT	48-210	48-214	62-11/16”	25-7/16”	3-1/4”	38667-07
95-06 FLHT	48-203	48-208	62-11/16 “	25-7/16”	2-3/4”	38667-00
87 FLHT	48-211	48-215	62-11/16”	32-15/16”	2-3/4”	38607-87A
08-13 FLHTC	48-202	48-207	62-11/16”	25-7/16”	3-7/8”	38667-08A
07 FLHTC	48-210	48-214	62-11/16”	25-7/16”	3-1/4”	38667-07
89-06 FLHTC	48-203	48-208	62-11/16 “	25-7/16”	2-3/4”	38667-00
87-88 FLHTC	48-211	48-215	62-11/16”	32-15/16”	2-3/4”	38607-87A
89-06 FLHTC/I	48-203	48-208	62-11/16 “	25-7/16”	2-3/4”	38667-00
08-13 FLHTCU	48-202	48-207	62-11/16”	25-7/16”	3-7/8”	38667-08A
10-13 FLHTCUTG	48-202	48-207	62-11/16”	25-7/16”	3-7/8”	38667-08A
07 FLHTCU	48-210	48-214	62-11/16”	25-7/16”	3-1/4”	38667-07
89-06 FLHTCU	48-203	48-208	62-11/16 “	25-7/16”	2-3/4”	38667-00
87-88 FLHTCU	48-211	48-215	62-11/16”	32-15/16”	2-3/4”	38607-87A
89-06 FLHTCU/I	48-203	48-208	62-11/16 “	25-7/16”	2-3/4”	38667-00
89-96 FLTCU/I	48-203	48-208	62-11/16 “	25-7/16”	2-3/4”	38601-89
08-12 FLTR	48-202	48-207	62-11/16”	25-7/16”	3-7/8”	38667-08A
13 FLTR/X	48-202	48-207	62-11/16”	25-7/16”	3-7/8”	38667-08A
07 FLTR	48-210	48-214	62-11/16”	25-7/16”	3-1/4”	38667-07
99-06 FLTR	48-203	48-208	62-11/16 “	25-7/16”	2-3/4”	38667-00
99-06 FLTRI	48-203	48-208	62-11/16 “	25-7/16”	2-3/4”	38667-00
00-01 FLTRSE	48-203	48-208	62-11/16 “	25-7/16”	2-3/4”	38667-00
89-93 FLHS	48-203	48-208	62-11/16 “	25-7/16”	2-3/4”	38601-89
87-88 FLHS	48-211	48-215	62-11/16”	32-15/16”	2-3/4”	38607-87A
08-13 FLHX	48-202	48-207	62-11/16”	25-7/16”	3-7/8”	38667-08A
07 FLHX	48-210	48-214	62-11/16”	25-7/16”	3-1/4”	38667-07
06 FLHX/I	48-203	48-208	62-11/16 “	25-7/16”	2-3/4”	38667-00
89-91 FLTC	48-203	48-208	62-11/16 “	25-7/16”	2-3/4”	38601-89
87-88 FLTC	48-211	48-215	62-11/16”	32-15/16”	2-3/4”	38607-87A

Fits Models	Braided Part #	Black Vinyl Part #	Housing Length	Adjuster Location From Trans	Inner Cable Travel	OEC Part #
SOFTAILS						
08-11 FXCW/FXCWC	48-201	48-206	64-11/16”	31-1/2”	3-1/4”	38666-07
07-10 FXST	48-201	48-206	64-11/16”	31-1/2”	3-1/4”	38666-07
00-06 FXST/I	48-200	48-205	64-7/16”	32-15/16”	2-3/4”	38666-00
99 FXST	48-211	48-215	62-11/16”	32-15/16”	2-3/4”	38607-87A
07-10 FXSTC	48-201	48-206	64-11/16”	31-1/2”	3-1/4”	38666-07
87-99 FXST/C	48-211	48-215	62-11/16”	32-15/16”	2-3/4”	38607-87A
07 FXSTD	48-212	48-216	61-11/16”	31-1/2”	3-1/4”	38664-07
00-06 FXSTD/I	48-211	48-215	62-11/16”	32-15/16”	2-3/4”	38664-00
07 FLSTSC	48-201	48-206	64-11/16”	31-1/2”	3-1/4”	38666-07
00-06 FXSTS/I	48-200	48-205	64-7/16”	32-15/16”	2-3/4”	38666-00
87-99 FXSTS	48-211	48-215	62-11/16”	32-15/16”	2-3/4”	38607-87A
12-16 FLS	48-212	48-216	62-11/16”	31-1/2”	3-1/4”	38664-07
07-16 FLSTC	48-201	48-206	64-11/16”	31-1/2”	3-1/4”	38666-07
00-06 FLSTC/I	48-200	48-205	64-7/16”	32-15/16”	2-3/4”	38666-00
87-99 FLSTC	48-211	48-215	62-11/16”	32-15/16”	2-3/4”	38607-87A
06 FLST/I	48-200	48-205	64-7/16”	32-15/16”	2-3/4”	38666-00
10-16 FLSTFB	48-201	48-206	64-11/16”	31-1/2”	3-1/4”	38664-07
87-90 FLST	48-211	48-215	62-11/16”	32-15/16”	2-3/4”	38607-87A
07-13 FLSTF	48-212	48-216	62-11/16”	31-1/2”	3-1/4”	38664-07
00-06 FLSTF/I	48-200	48-205	64-7/16”	32-15/16”	2-3/4”	38666-00
90-99 FLSTF	48-211	48-215	62-11/16”	32-15/16”	2-3/4”	38607-87A
07-16 FLSTN	48-212	48-216	62-11/16”	31-1/2”	3-1/4”	38664-07
05-06 FLSTN	48-211	48-215	62-11/16”	32-15/16”	2-3/4”	38664-00
93-93 FLSTN	48-211	48-215	62-11/16”	32-15/16”	2-3/4”	38607-87A
08-11 FLSTSB	48-201	48-206	64-11/16”	31-1/2”	3-1/4”	38666-07
00-06 FLSTS/I	48-200	48-205	64-7/16”	32-15/16”	2-3/4”	38666-00
97-99 FLSTS	48-211	48-215	62-11/16”	32-15/16”	2-3/4”	38607-87A

Fits Models	Braided Part #	Black Vinyl Part #	Housing Length	Adjuster Location From Trans	Inner Cable Travel	OEC Part #
DYNA-GLIDE						
12-16 FLD	48-201	48-206	64-11/16”	31-1/2”	3-1/4”	38666-07
06-10 FXD	40-201	48-206	64-11/16”	31-1/2”	3-1/4”	38666-07
00-05 FXD/X	48-200	48-205	64-7/16”	32-15/16”	2-3/4”	38666-00
06-14 FXDC	48-201	48-206	64-11/16”	31-1/2”	3-1/4”	38666-07
00-05 FXDX/T	48-200	48-205	64-7/16”	32-15/16”	2-3/4”	38666-00
06-16 FXDB						
w/ mini base apes	48-204	48-209	68-11/16”	31-1/2”	3-1/4”	38789-06A
01-02 FXDWG CVO	48-200	48-205	64-7/16”	32-15/16”	2-3/4”	38666-00
14-16 FXDL	48-204	48-209	68-11/16”	31-1/2”	3-1/4”	38789-06A
06-08 FXDL	48-201	48-206	64-11/16”	31-1/2”	3-1/4”	38788-06A
01-05 FXDL	48-200	48-205	64-7/16”	32-15/16”	2-3/4”	38666-00
10-16 FXDWG	48-204	48-209	68-11/16”	31-1/2”	3-1/4”	38789-06A
06-08 FXDWG	48-204	48-209	68-11/16”	31-1/2”	3-1/4”	38789-06A
06 FXD35	48-201	48-206	64-11/16”	31-1/2”	3-1/4”	38787-06

Wheels, Tires Hubs, Brakes Calipers



TIRES, TUBES, RIM STRIPS,
STOCK & CUSTOM WHEELS,
AXLES, BRAKES &
PARTS YOU NEED
FOR THE ABOVE

VORTEX ALUMINUM WHEELS



5

Step up in style with Ultima® Vortex wheels. CNC Machined aluminum wheels deliver uncompromised style that you can expect from an Ultima® product. Available in 16", 18", 21", 23" & 26" front & rear wheel applications.Complete the look with matching polished stainless steel Vortex rotors & Vortex Pulleys.

VORTEX® FRONT WHEELS

PART NUMBER	RIM SIZE	DISC	ROTOR	BEARING TYPE	AXLE SIZE
37-805	26 X 3.5	Dual	00-LTR	Sealed ball	1"
37-806	23 X 3.5	Dual	00-LTR	Sealed ball	1"
37-807	21 X 3.5	Single	00-LTR	Sealed ball	1"
37-808	21 X 3.5	Dual	00-LTR	Sealed ball	1"
37-809	21 X 2.15	Single	00-LTR	Sealed ball	1"
37-810	21 X 2.15	Dual	00-LTR	Sealed ball	1"
37-811	18X 3.5	Dual	00-LTR	Sealed ball	1"
37-812	16 X 3.5	Dual	00-LTR	Sealed ball	1"

VORTEX® REAR WHEELS

PART NUMBER	RIM SIZE	ROTOR	BEARING TYPE	AXLE SIZE
37-813	16 X 3.5	00-LTR	Sealed ball	1"
37-814	18 X 3.5	00-LTR	Sealed ball	1"
37-815	18 X 5.5	00-LTR	Sealed ball	1"

VORTEX® PULLEYS

99'-EARLIER & 00'-LATER

94-710	Pulley, polished, 1.5", 70T.
94-711	Pulley, polished, 1.5", 65T.
94-712	Pulley, polished, 1-1/8", 70T.
94-713	Pulley, polished, 1-1/8", 65T.
94-714	Pulley, polished, 1", 70T.
94-715	Pulley, polished, 1", 65T.

Billet Hubs for Narrow Glide on page 5/20



VORTEX® ROTORS (POLISHED STAINLESS STEEL)

90-650	Rotor, 11.5" Right Rotate, 84'- 99' & 00'-later (w/speedo notch)
90-651	Rotor, 11.5" Left Rotate, 84'- 99' & 00'-later (w/speedo notch)
90-652	Rotor, 11.5" Rear, 84'- 99' & 00'-later
90-653	Rotor, 11.8" Right Rotate, 08'- 13' Touring & 06'- 09' Dyna
90-654	Rotor, 11.8" Left Rotate, 08'- 13' Touring & 06'- 09' Dyna
90-655	Rotor, 11.8" Rear, 08'- 13' Touring & 06'- 09' Dyna

Use MW# 33-295 Axle Reducer for 3/4" axle applications.





Center wheel spacers for all size wheels available near the back of this section.

Rotors & Pulleys utilize reducer spacers to achieve multi-year applications. Rotors have 2.220" center hole. Reducer spacer has 1.975" center hole.



Vortex Pulley

Vortex Rotor

VORTEX "BLACK CUT" ALUMINUM WHEELS



Step up in style with Ultima® Vortex Black Cut wheels. CNC Machined, Black Cut Aluminum wheels deliver uncompromised style that you can expect from an Ultima® product. Available in 16", 18", 21", 23" & 26" front & rear wheel applications. Complete the look with matching polished stainless steel Vortex rotors & Vortex Black Cut Pulleys.

VORTEX BLACK CUT FRONT WHEELS

PART NUMBER	RIM SIZE	DISC	ROTOR	BEARING TYPE	AXLE SIZE
37-820	26 X 3.5	Dual	00-LTR	Sealed ball	1"
37-821	23 X 3.5	Dual	00-LTR	Sealed ball	1"
37-822	21 X 3.5	Single	00-LTR	Sealed ball	1"
37-823	21 X 3.5	Dual	00-LTR	Sealed ball	1"
37-824	21 X 2.15	Single	00-LTR	Sealed ball	1"
37-825	21 X 2.15	Dual	00-LTR	Sealed ball	1"
37-826	18X 3.5	Dual	00-LTR	Sealed ball	1"
37-827	16 X 3.5	Dual	00-LTR	Sealed ball	1"

VORTEX BLACK CUT REAR WHEELS

PART NUMBER	RIM SIZE	ROTOR	BEARING TYPE	AXLE SIZE
37-828	16 X 3.5	00-LTR	Sealed ball	1"
37-829	18 X 3.5	00-LTR	Sealed ball	1"
37-830	18 X 5.5	00-LTR	Sealed ball	1"

VORTEX BLACK CUT PULLEYS

99'-EARLIER & 00'-LATER

94-720	Pulley, black, 1.5", 70T.
94-721	Pulley, black, 1.5", 65T.
94-722	Pulley, black, 1-1/8", 70T.
94-723	Pulley, black, 1-1/8", 65T.
94-724	Pulley, black, 1", 70T.
94-725	Pulley, black, 1", 65T.

Billet Hubs for Narrow Glide on page 5/20



VORTEX ROTORS (POLISHED STAINLESS STEEL)

90-650	Rotor, 11.5" Right Rotate, 84'- 99' & 00'-later (w/speedo notch)
90-651	Rotor, 11.5" Left Rotate, 84'- 99' & 00'-later (w/speedo notch)
90-652	Rotor, 11.5" Rear, 84'- 99' & 00'-later
90-653	Rotor, 11.8" Right Rotate, 08'- 13' Touring & 06'- 09' Dyna
90-654	Rotor, 11.8" Left Rotate, 08'- 13' Touring & 06'- 09' Dyna
90-655	Rotor, 11.8" Rear, 08'- 13' Touring & 06'- 09' Dyna

Rotors & Pulleys utilize reducer spacers to achieve multi-year applications. Rotors have 2.220" center hole. Reducer spacer has 1.975" center hole.

Use MW# 33-295 Axle Reducer for 3/4" axle applications.





Center wheel spacers for all size wheels available near the back of this section.



Vortex Pulley

Vortex Rotor

KOOL KAT® ALUMINUM WHEELS



Bring some Cool Factor to your ride with Ultima® Kool Kat® wheels. CNC Machined, Polished Aluminum wheels deliver uncompromised style that you can expect from an Ultima® product. Available in 16", 18", 21", 23" & 26" front & rear wheel applications.Complete the look with matching polished stainless steel Kool Kat® rotors & Kool Kat® polished pulleys.

KOOL KAT® FRONT WHEELS

PART NUMBER	RIM SIZE	DISC	ROTOR	BEARING TYPE	AXLE SIZE
37-613	26 X 3.5	Single	00-LTR	Sealed ball	1"
37-614	26 X 3.5	Dual	00-LTR	Sealed ball	1"
37-611	23 X 3.5	Single	00-LTR	Sealed ball	1"
37-612	23 X 3.5	Dual	00-LTR	Sealed ball	1"
37-600	21 X 2.15	Single	00-LTR	Sealed ball	1"
37-601	21 X 2.15	Dual	00-LTR	Sealed ball	1"
37-602	21 X 3.5	Single	00-LTR	Sealed ball	1"
37-603	21 X 3.5	Dual	00-LTR	Sealed ball	1"
37-615*	18 X 3.5	Single	00-LTR	Sealed ball	1"
37-616*	18X 3.5	Dual	00-LTR	Sealed ball	1"
37-604	16 X 3.5	Single	00-LTR	Sealed ball	1"
37-605	16 X 3.5	Dual	00-LTR	Sealed ball	1"

KOOL KAT® REAR WHEELS

PART NUMBER	RIM SIZE	ROTOR	BEARING TYPE	AXLE SIZE
37-606	16 X 3.5	00-LTR	Sealed ball	1"
37-607	18 X 3.5	00-LTR	Sealed ball	1"
37-608	18 X 5.5	00-LTR	Sealed ball	1"

KOOL KAT® PULLEYS

99'-EARLIER & 00'-LATER

94-630	Pulley, polished, 1.5", 70T.
94-631	Pulley, polished, 1.5", 65T.
94-632	Pulley, polished, 1-1/8", 70T.
94-633	Pulley, polished, 1-1/8", 65T.
94-634	Pulley, polished, 1", 70T.
94-635	Pulley, polished, 1", 65T.

Billet Hubs for Narrow Glide on page 5/20



KOOL KAT® ROTORS (POLISHED STAINLESS STEEL)

90-770	Rotor, 11.5" Front, 84'- 99' & 00'-later (w/speedo notch)
90-771	Rotor, 11.5" Rear, 84'- 99' & 00'-later
90-790	Rotor, 11.8" Front, 08'- 13' Touring & 06'- 09' Dyna
90-791	Rotor, 11.8" Rear, 08'- 13' Touring & 06'- 09' Dyn

Rotors & Pulleys utilize reducer spacers to achieve multi-year applications. Rotors have 2.220" center hole. Reducer spacer has 1.975" center hole.

Use MW# 33-295 Axle Reducer for 3/4" axle applications.





Center wheel spacers for all size wheels available near the back of this section.

KOOL KAT® "BLACK CUT" ALUMINUM WHEELS



Step up the Cool Factor even more with Ultima® Kool Kat® Black Cut wheels. CNC Machined, Black Cut Aluminum wheels deliver uncompromised style that you can expect from an Ultima® product. Available in 16", 18", 21", 23" & 26" front & rear wheel applications.Complete the look with matching polished stainless steel Kool Kat® rotors & Kool Kat® Black Cut Pulleys.

KOOL KAT® BLACK CUT FRONT WHEELS

PART NUMBER	RIM SIZE	DISC	ROTOR	BEARING TYPE	AXLE SIZE
37-640	26 X 3.5	Single	00-LTR	Sealed ball	1"
37-641	26 X 3.5	Dual	00-LTR	Sealed ball	1"
37-642	23 X 3.5	Single	00-LTR	Sealed ball	1"
37-643	23 X 3.5	Dual	00-LTR	Sealed ball	1"
37-644	21 X 2.15	Single	00-LTR	Sealed ball	1"
37-645	21 X 2.15	Dual	00-LTR	Sealed ball	1"
37-646	21 X 3.5	Single	00-LTR	Sealed ball	1"
37-647	21 X 3.5	Dual	00-LTR	Sealed ball	1"
37-648	18X 3.5	Single	00-LTR	Sealed ball	1"
37-649	18X 3.5	Dual	00-LTR	Sealed ball	1"
37-650	16 X 3.5	Single	00-LTR	Sealed ball	1"
37-651	16 X 3.5	Dual	00-LTR	Sealed ball	1"

KOOL KAT® BLACK CUT REAR WHEELS

PART NUMBER	RIM SIZE	ROTOR	BEARING TYPE	AXLE SIZE
37-652	16 X 3.5	00-LTR	Sealed ball	1"
37-653	18 X 3.5	00-LTR	Sealed ball	1"
37-654	18 X 5.5	00-LTR	Sealed ball	1"

KOOL KAT® BLACK CUT PULLEYS

99'-EARLIER & 00'-LATER

94-670	Pulley, 1.5", 70T.
94-671	Pulley, 1.5", 65T.
94-672	Pulley, 1-1/8", 70T.
94-673	Pulley, 1-1/8", 65T.
94-674	Pulley, 1", 70T.
94-675	Pulley, 1", 65T.

Billet Hubs for Narrow Glide
on page 5/20

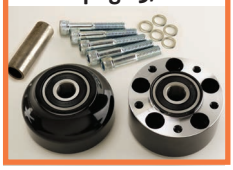

KOOL KAT® ROTORS (POLISHED STAINLESS STEEL)

90-770	Rotor, 11.5" Front, 84'- 99' & 00'-later (w/speedo notch)
90-771	Rotor, 11.5" Rear, 84'- 99' & 00'-later
90-790	Rotor, 11.8" Front, 08'- 13' Touring & 06'- 09' Dyna
90-791	Rotor, 11.8" Rear, 08'- 13' Touring & 06'- 09' Dyn

Rotors & Pulleys utilize reducer spacers to achieve multi-year applications. Rotors have 2.220" center hole. Reducer spacer has 1.975" center hole.

Use MW# 33-295 Axle Reducer for 3/4" axle applications.





Center wheel spacers for all size wheels available near the back of this section.

MANHATTAN ALUMINUM WHEELS



Bring some sleek styling to your ride with Ultima® Manhattan wheels. CNC Machined, Polished Aluminum wheels deliver uncompromised style that you can expect from an Ultima® product. 16", 18", 21", 23" & 26" front & rear wheel applications. Complete the look with matching polished stainless steel Manhattan rotors & Manhattan polished pulleys.

MANHATTAN FRONT WHEELS

PART NUMBER	RIM SIZE	DISC	ROTOR	BEARING TYPE	AXLE SIZE
37-632	26 X 3.5	Single	00-LTR	Sealed ball	1"
37-633	26 X 3.5	Dual	00-LTR	Sealed ball	1"
37-630	23 X 3.5	Single	00-LTR	Sealed ball	1"
37-631	23 X 3.5	Dual	00-LTR	Sealed ball	1"
37-620	21 X 2.15	Single	00-LTR	Sealed ball	1"
37-621	21 X 2.15	Dual	00-LTR	Sealed ball	1"
37-622	21 X 3.5	Single	00-LTR	Sealed ball	1"
37-623	21 X 3.5	Dual	00-LTR	Sealed ball	1"
37-634*	18X 3.5	Single	00-LTR	Sealed ball	1"
37-635*	18 X 3.5	Dual	00-LTR	Sealed ball	1"
37-624	16 X 3.5	Single	00-LTR	Sealed ball	1"
37-625	16 X 3.5	Dual	00-LTR	Sealed ball	1"

MANHATTAN REAR WHEELS

PART NUMBER	RIM SIZE	ROTOR	BEARING TYPE	AXLE SIZE
37-626	16 X 3.5	00-LTR	Sealed ball	1"
37-627	18 X 3.5	00-LTR	Sealed ball	1"
37-628	18 X 5.5	00-LTR	Sealed ball	1"

MANHATTAN PULLEYS

99'-EARLIER & 00'-LATER

94-640	Pulley, polished, 1.5", 70T.
94-641	Pulley, polished, 1.5", 65T.
94-642	Pulley, polished, 1-1/8", 70T.
94-643	Pulley, polished, 1-1/8", 65T.
94-644	Pulley, polished, 1", 70T.
94-645	Pulley, polished, 1", 65T.

Billet Hubs for Narrow Glide on page 5/20



MANHATTAN ROTORS (POLISHED STAINLESS STEEL)

90-950	Rotor, 11.5" Front, 84'- 99' & 00'-later (w/speedo notch)
90-951	Rotor, 11.5" Rear, 84'- 99' & 00'-later
90-952	Rotor, 11.8" Front, 08'- 13' Touring & 06'- 09' Dyna
90-953	Rotor, 11.8" Rear, 08'- 13' Touring & 06'- 09' Dyn

Rotors & Pulleys utilize reducer spacers to achieve multi-year applications. Rotors have 2.220" center hole. Reducer spacer has 1.975" center hole.

Use MW# 33-295 Axle Reducer for 3/4" axle applications.





Center wheel spacers for all size wheels available near the back of this section.

MANHATTAN "BLACK CUT" ALUMINUM WHEELS



Bring black sleek styling to your ride with Ultima® Manhattan Black Cut wheels. CNC Machined, Black Cut Aluminum wheels deliver uncompromised style that you can expect from an Ultima® product. 16", 18", 21", 23" & 26" front & rear wheel applications. Complete the look with matching Manhattan Black Cut Pulleys & polished stainless steel Manhattan rotors.

MANHATTAN FRONT WHEELS

PART NUMBER	RIM SIZE	DISC	ROTOR	BEARING TYPE	AXLE SIZE
37-660	26 X 3.5	Single	00-LTR	Sealed ball	1"
37-661	26 X 3.5	Dual	00-LTR	Sealed ball	1"
37-662	23 X 3.5	Single	00-LTR	Sealed ball	1"
37-663	23 X 3.5	Dual	00-LTR	Sealed ball	1"
37-664	21 X 2.15	Single	00-LTR	Sealed ball	1"
37-665	21 X 2.15	Dual	00-LTR	Sealed ball	1"
37-666	21 X 3.5	Single	00-LTR	Sealed ball	1"
37-667	21 X 3.5	Dual	00-LTR	Sealed ball	1"
37-668	18 X 3.5	Single	00-LTR	Sealed ball	1"
37-669	18 X 3.5	Dual	00-LTR	Sealed ball	1"
37-670	16 X 3.5	Single	00-LTR	Sealed ball	1"
37-671	16 X 3.5	Dual	00-LTR	Sealed ball	1"

MANHATTAN REAR WHEELS

PART NUMBER	RIM SIZE	ROTOR	BEARING TYPE	AXLE SIZE
37-672	16 X 3.5	00-LTR	Sealed ball	1"
37-673	18 X 3.5	00-LTR	Sealed ball	1"
37-674	18 X 5.5	00-LTR	Sealed ball	1"

MANHATTAN PULLEYS

99'-EARLIER & 00'-LATER

94-650	Pulley, 1.5", 70T.
94-651	Pulley, 1.5", 65T.
94-652	Pulley, 1-1/8", 70T.
94-653	Pulley, 1-1/8", 65T.
94-654	Pulley, 1", 70T.
94-655	Pulley, 1", 65T.

Billet Hubs for Narrow Glide on page 5/20

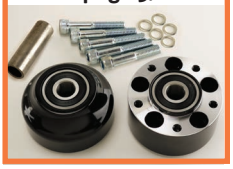

MANHATTAN ROTORS (POLISHED STAINLESS STEEL)

90-950	Rotor, 11.5" Front, 84'- 99' & 00'-later (w/speedo notch)
90-951	Rotor, 11.5" Rear, 84'- 99' & 00'-later
90-952	Rotor, 11.8" Front, 08'- 13' Touring & 06'- 09' Dyna
90-953	Rotor, 11.8" Rear, 08'- 13' Touring & 06'- 09' Dyn

Rotors & Pulleys utilize reducer spacers to achieve multi-year applications. Rotors have 2.220" center hole. Reducer spacer has 1.975" center hole.

Use MW# 33-295 Axle Reducer for 3/4" axle applications.





Center wheel spacers for all size wheels available near the back of this section.

KING SPOKE® BLACK/CHROME





ULTIMA® KING SPOKE® WHEELS, PULLEYS & ROTORS

Give your ride the royal treatment with Ultima® King Spoke® wheels. All steel construction with 48 solid spokes for durability you would expect from an Ultima® product. Highlight the look w/matching polished stainless steel King Spoke® rotors & King Spoke® pulleys (chrome or polished).

FRONT WHEELS

PART NUMBER	RIM SIZE	DISC	BEARING ROTOR	TYPE	AXLE SIZE
37-535	16 X 3.5	Single	00-LTR	Sealed ball	1"
37-537	16 X 3.5	Dual	00-LTR	Sealed ball	1"
37-534	21 X 2.15	Single	00-LTR	Sealed ball	1"
37-513	21 X 2.15	Dual	00-LTR	Sealed ball	1"
37-533	21 X 3.5	Single	00-LTR	Sealed ball	1"
37-543	21 X 3.5	Dual	00-LTR	Sealed ball	1"
37-532	23 X 3.5	Single	00-LTR	Sealed ball	1"
37-549	23 X 3.5	Dual	00-LTR	Sealed ball	1"
37-541	26 X 3.5	Single	00-LTR	Sealed ball	1"
37-561	26 X 3.5	Dual	00-LTR	Sealed ball	1"
37-566*	30 X 4.0	Dual	00-LTR	Sealed ball	1"
***Narrow Glide**					
37-563*	21 X 2.15	Single	00-LTR	Sealed ball	3/4"

REAR WHEELS

PART NUMBER	RIM SIZE	ROTOR/ PULLEY	BEARING TYPE	AXLE SIZE	
37-538	16 X 3.5	00-LTR	Sealed ball	1"	
37-539	16 X 5.5	00-LTR	Sealed ball	1"	
37-547	17 X 6.0	00-LTR	Sealed ball	1"	
37-521	18 X 3.5	00-LTR	Sealed ball	1"	
37-522	18 X 5.5	00-LTR	Sealed ball	1"	
37-581*	18 X 5.5	00-LTR	Sealed ball	25mm	**Cush Drive***
37-523	18 X 8.5	00-LTR	Sealed ball	1"	
37-545	18 X 10.5	00-LTR	Sealed ball	1"	

Use MW# 33-295 Axle Reducer for 3/4" axle applications.





Center wheel spacers for all size wheels available near the back of this section.

KING SPOKE® ROTORS
(POLISHED STAINLESS STEEL)

90-610	Rotor, 11.5" front, 84'- 99' & 00'-later (w/speedo notch)
90-613	Rotor, 11.5" rear, 84'- 99' & 00'-later
90-615	Rotor, 11.8" front, 08'- 13' Touring & 06'- 09' Dyna
90-619	Rotor, 11.8" Rear, 08'- 13' Touring & 06'- 09' Dyna

Rotors & Pulleys utilize reducer spacers to achieve multi-year applications. Rotors have 2.220" center hole. Reducer spacer has 1.975" center hole.

KING SPOKE® PULLEYS

99'-EARLIER & 00'-LATER

94-606	Pulley, chrome, 1", 65T.
94-607	Pulley, chrome, 1", 70T.
94-624	Pulley, chrome, 1-1/8", 70T.
94-660	Pulley, chrome, 1-1/4, 65T.
94-661	Pulley, chrome, 1-1/4, 70T.
94-604	Pulley, chrome, 1.5", 65T.
94-605	Pulley, chrome, 1.5", 70T.



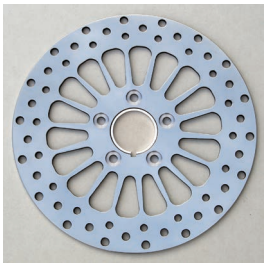

KING SPOKE® CHROME/CHROME





ULTIMA® KING SPOKE® WHEELS, PULLEYS & ROTORS

Give your ride the royal treatment with Ultima® King Spoke® wheels. Offered in chrome on chrome or chrome on black. All steel construction with 48 solid spokes for durability you would expect from an Ultima® product. Highlight the look w/matching polished stainless steel King Spoke® rotors & King Spoke® pulleys (chrome or polished).

FRONT WHEELS

PART NUMBER	RIM SIZE	BEARING DISC	ROTOR	AXLE TYPE	SIZE
37-527	16 X 3.5	Single	00-LTR	Sealed ball	1”
37-529	16 X 3.5	Dual	00-LTR	Sealed ball	1”
37-526	21 X 2.15	Single	00-LTR	Sealed ball	1”
37-501	21 X 2.15	Dual	00-LTR	Sealed ball	1”
37-525	21 X 3.5	Single	00-LTR	Sealed ball	1”
37-542	21 X 3.5	Dual	00-LTR	Sealed ball	1”
37-524	23 X 3.5	Single	00-LTR	Sealed ball	1”
37-548	23 X 3.5	Dual	00-LTR	Sealed ball	1”
37-540	26 X 3.5	Single	00-LTR	Sealed ball	1”
37-560	26 X 3.5	Dual	00-LTR	Sealed ball	1”
37-565*	30 X 4.0	Dual	00-LTR	Sealed ball	1”
***Narrow Glide**					
37-562*	21 X 2.15	Single	00-LTR	Sealed ball	3/4”

REAR WHEELS

PART NUMBER	RIM SIZE	ROTOR/ PULLEY	BEARING TYPE	AXLE SIZE	
37-530	16 X 3.5	00-LTR	Sealed ball	1”	
37-531	16 X 5.5	00-LTR	Sealed ball	1”	
37-546	17 X 6.0	00-LTR	Sealed ball	1”	
37-509	18 X 3.5	00-LTR	Sealed ball	1”	
37-510	18 X 5.5	00-LTR	Sealed ball	1”	
37-580*	18 X 5.5	00-LTR	Sealed ball	25mm	**Cush Drive***
37-511	18 X 8.5	00-LTR	Sealed ball	1”	
37-544	18 X 10.5	00-LTR	Sealed ball	1”	

Use MW# 33-295 Axle Reducer for 3/4” axle applications.





Center wheel spacers for all size wheels available near the back of this section.

KING SPOKE® ROTORS
(POLISHED STAINLESS STEEL)

90-610	Rotor, 11.5” front, 84’- 99’ & 00’-later (w/speedo notch)
90-613	Rotor, 11.5” rear, 84’- 99’ & 00’-later
90-615	Rotor, 11.8” front, 08’- 13’ Touring & 06’- 09’ Dyna
90-619	Rotor, 11.8” Rear, 08’- 13’ Touring & 06’- 09’ Dyn

Rotors & Pulleys utilize reducer spacers to achieve multi-year applications. Rotors have 2.220” center hole. Reducer spacer has 1.975” center hole.

KING SPOKE® PULLEYS

99’-EARLIER & 00’-LATER	
94-606	Pulley, chrome, 1”, 65T.
94-607	Pulley, chrome, 1”, 70T.
94-624	Pulley, chrome, 1-1/8”, 70T.
94-660	Pulley, chrome, 1-1/4, 65T.
94-661	Pulley, chrome, 1-1/4, 70T.
94-604	Pulley, chrome, 1.5”, 65T.
94-605	Pulley, chrome, 1.5”, 70T.



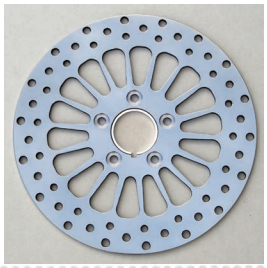

ULTIMA® KING SPOKE® BLACK ON BLACK WHEELS

Ultima® King Spoke® Wheels come with a black billet hub, black rim, black spokes and chrome nipples for a true classic look.



FRONT WHEELS

PART NUMBER	RIM SIZE	DISC	BEARING ROTOR	AXLE TYPE	AXLE SIZE
37-720	16 X 3.5	Dual	00-LTR	Sealed ball	1"
37-732	16 X 3.5	Single	00-LTR	Sealed ball	1"
37-721	18 X 3.5	Single	00-LTR	Sealed ball	1"
37-722	21 X 2.15	Single	00-LTR	Sealed ball	1"
37-733	21 X 2.15	Dual	00-LTR	Sealed ball	1"
37-723	21 X 3.5	Single	00-LTR	Sealed ball	1"
37-724	21 X 3.5	Dual	00-LTR	Sealed ball	1"
37-725	23 X 3.5	Dual	00-LTR	Sealed ball	1"
37-734	23 X 3.5	Single	00-LTR	Sealed ball	1"
37-726	26 X 3.5	Dual	00-LTR	Sealed ball	1"
37-735	26 X 3.5	Single	00-LTR	Sealed ball	1"
37-567*	30 X 4.0	Dual	00-LTR	Sealed ball	1"
Narrow Glide*					
37-564*	21 X 2.15	Single	00-LTR	Sealed ball	3/4"

REAR WHEELS

PART NUMBER	RIM SIZE	ROTOR/ PULLEY	BEARING TYPE	AXLE SIZE	
37-727	16 X 3.5	00-LTR	Sealed ball	1"	
37-728	18 X 3.5	00-LTR	Sealed ball	1"	
37-729	18 X 5.5	00-LTR	Sealed ball	1"	
37-736*	18 X 5.5	00-LTR	Sealed ball	25mm	**Cush Drive***
37-730	18 X 8.5	00-LTR	Sealed ball	1"	
37-731	18 X 10.5	00-LTR	Sealed ball	1"	



BLACK KING SPOKE PULLEYS

BLACK 99'-Earlier & 00'-Later

94-680 Pulley, black, 1.5", 65T.
94-681 Pulley, black, 1.5", 70T.

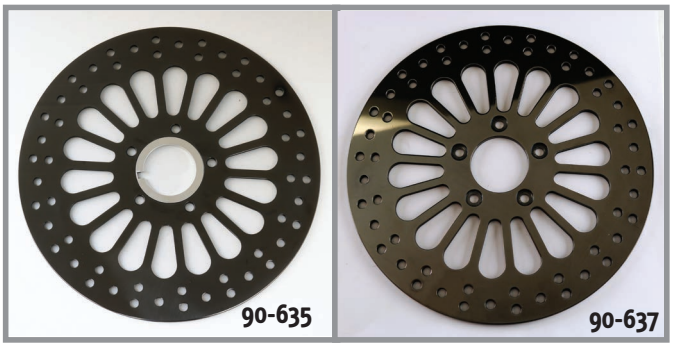

KING SPOKE® BLACK ROTORS

90-635 Rotor, 11.5" front, 84'- 99' & 00'-later (w/speedo notch)
90-636 Rotor, 11.5" rear, 84'- 99' & 00'-later
90-637 Rotor, 11.8" front, 08'- 13' Touring & 06'- 09' Dyna
90-638 Rotor, 11.8" Rear, 08'- 13' Touring & 06'- 09' Dyn

Rotors & Pulleys utilize reducer spacers to achieve multi-year applications. Rotors have 2.220" center hole. Reducer spacer has 1.975" center hole. Earlier

ULTIMA® KING SPOKE® 38 WHEELS



FRONT KING SPOKE 38

PART NUMBER	RIM SIZE	DISC	ROTOR	BEARING TYPE	AXLE SIZE
CHROME					
37-753	21 X 3.5	Dual	00-LTR	Sealed ball	1”
CHROME / BLACK					
37-754	21 X 3.5	Dual	00-LTR	Sealed ball	1”
BLACK / BLACK					
37-755	21 X 3.5	Dual	00-LTR	Sealed ball	1”

REAR KING SPOKE 38

PART NUMBER	RIM SIZE	ROTOR/ PULLEY	BEARING TYPE	AXLE SIZE
CHROME				
37-750	16 X 3.5	00-LTR	Sealed ball	1”
CHROME / BLACK				
37-751	16 X 3.5	00-LTR	Sealed ball	1”
BLACK / BLACK				
37-752	16 X 3.5	00-LTR	Sealed ball	1”

ULTIMA® COMPLETE BLACK 60 SPOKE WHEELS



Ultima® 60 Spoke Wheels come with a black billet hub, black rim & chrome spokes for a true classic look.

FRONT WHEELS

PART NUMBER	RIM SIZE	DISC	ROTOR	BEARING TYPE	AXLE SIZE
36-650	16 X 3.5	Dual	00-LTR	Sealed ball	1"
36-651	18 X 3.5	Single	00-LTR	Sealed ball	1"
36-652	21 X 2.15	Single	00-LTR	Sealed ball	1"
36-653	21 X 3.5	Single	00-LTR	Sealed ball	1"
36-654	21 X 3.5	Dual	00-LTR	Sealed ball	1"
36-655	23 X 3.5	Dual	00-LTR	Sealed ball	1"
36-656	26 X 3.5	Dual	00-LTR	Sealed ball	1"

REAR WHEELS

PART NUMBER	RIM SIZE	ROTOR/ PULLEY	BEARING TYPE	AXLE SIZE
36-657	16 X 3.5	00-LTR	Sealed ball	1"
36-658	18 X 3.5	00-LTR	Sealed ball	1"
36-659	18 X 5.5	00-LTR	Sealed ball	1"
36-660	18 X 8.5	00-LTR	Sealed ball	1"
36-661	18 X 10.5	00-LTR	Sealed ball	1"

CLASSIC SPOKE ROTORS *(POLISHED STAINLESS STEEL)*

90-624 Rotor, 11.5" front, 84'- 99' & 00'-later (w/speedo notch)
90-625 Rotor, 11.5" rear, 84'- 99' & 00'-later
90-626 Rotor, 11.8" front, 08'- 13' Touring & 06'- 09' Dyna
90-634 Rotor, 11.8" Rear, 08'- 13' Touring & 06'- 09' Dyn

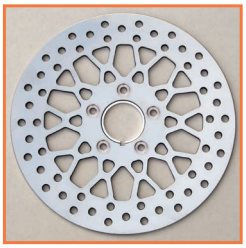

90-624

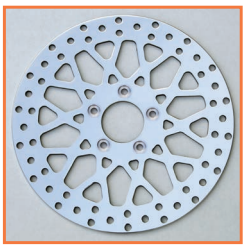

90-626

CLASSIC SPOKE PULLEYS



1999 - EARLIER & 2000 - LATER

94-600 Pulley, chrome, 1.5", 65T.
94-601 Pulley, chrome, 1.5", 70T.
94-628 Pulley, chrome, 1-1/8", 70T.
94-629 Pulley, chrome, 1-1/8", 65T.
94-602 Pulley, chrome, 1", 65T.
94-603 Pulley, chrome, 1", 70T.

Use MW# 33-295 Axle Reducer for 3/4" axle applications.





Center wheel spacers for all size wheels available near the back of this section.

ULTIMA® COMPLETE CHROME 40 SPOKE WHEELS



36-311



36-314



36-486



36-733

*** Denotes OEM Size Stock Wheel**

Features chrome plated OEM style or Billet hubs laced to chrome steel rims using chromed steel spokes and nipples. Included are wheel bearings, center bearing spacer and wheel seals. Available to fit standard models as well as Wide rear applications. Billet hub wheels are sealed for tubeless operation.

5

Ultima® Chrome 40 Spoke Front Wheels Pre 1999 Models w/ OEM Style Hub

Narrow Glide front, FX/XL 78/83 Dual Disc
36-485* 19"x 2.50", Tapered bearing, 3/4" axle.
36-486 21"x 1.85", Tapered bearing, 3/4" axle.
36-487* 21"x 2.15", Tapered bearing, 3/4" axle.

Narrow Glide front, FXR/XL 84/99 Single or Dual Disc
36-399* 19"x 2.50", Tapered Bearing, 3/4" Axle
36-390 21"x 2.15", Tapered Bearing, 3/4" Axle

Wide Glide front, FL 67/72
36-304 16"x 3.00", w/o bearings, spacers or seals

Wide Glide front, FL Single Disc 73/83
36-314* 16"x 3.00" Tapered Bearing, 3/4" Axle
36-605 16"x 3.50" Tapered Bearing, 3/4" Axle
36-311 21"x 1.85" Tapered Bearing, 3/4" Axle
36-312 21"x 2.15" Tapered Bearing, 3/4" Axle

Wide Glide front, FL Dual Disc 73/83
36-305* 16"x 3.00" Tapered Bearing, 3/4" Axle
36-606 16"x 3.50" Tapered Bearing, 3/4" Axle

Wide Glide front, FXWG 80/99 Dual Disc
36-313 16"x 3.00" Tapered Bearing, 3/4" Axle
36-604 16"x 3.50" Tapered Bearing, 3/4" Axle
36-445 19"x 2.50" Tapered Bearing, 3/4" Axle
36-309 21"x 1.85" Tapered Bearing, 3/4" Axle
36-310* 21"x 2.15" Tapered Bearing, 3/4" Axle

Wide Glide front, FXST/FXDWG (Except FXSTS), Single Disc 84/99
36-344 16"x 3.0" Tapered bearing, 3/4" axle.
36-607 16"x 3.50" Tapered Bearing, 3/4" Axle
36-395 19"x 2.50" Tapered Bearing, 3/4" Axle
36-327 21"x 1.85" Tapered Bearing, 3/4" Axle
36-328* 21"x 2.15" Tapered Bearing, 3/4" Axle

Wide Glide front, FLST Single Disc 86/99
36-350* 16"x 3.0" Tapered bearing, 3/4" axle.
36-602 16"x 3.50" Tapered Bearing, 3/4" Axle

Ultima® Chrome 40 Spoke Rear Wheels Pre 1999 Models w/ OEM Style Hub

FL 67/72
36-304* 16"x 3.00", w/o bearings, spacers or seals

FX/XL Chain 73/83 (Must use flat sprocket)
36-305* 16"x 3.00", Tapered bearing, 3/4" Axle
36-606 16"x 3.50", Tapered bearing, 3/4" Axle

XL Belt Rear 84/99 FX/FL Dyna®, Softail® except Touring-Belt Drive Rear 84/99
36-356* 16"x 3.00" Tapered Bearing, 3/4" Axle
36-603 16"x 3.50" Tapered Bearing, 3/4" Axle

Ultima® Chrome 40 Spoke Front Wheels 2000 & Later Models w/ OEM Style Hub

Dyna®/Sportster® Narrow Glide
XL 00/07 - Dyna® 00/03 Single or Dual Disc
36-730* 19"x 2.50", Ball bearing, 3/4" axle.
36-731* 21"x 2.15", Ball bearing, 3/4" axle.

Softail®/Dyna Wide Glide®
FX/FL 00/06, FXDWG 00/05 Single Disc (Except FXSTS, FLSTS)
36-733* 16"x 3.00", Ball Bearing, 3/4" Axle
36-732* 21"x 2.15", Tapered Bearing, 3/4" Axle

Ultima® Chrome 40 Spoke Rear Wheels 2000 & Later Models w/ OEM Style Hub

Dyna® 00/05, FXST 00/07, FLH 00/01, XL 00/04
36-734* 16"x 3.00", ball bearing, 3/4" axle.

ULTIMA® COMPLETE CHROME 60 SPOKE WHEELS

Ultima® Chrome 60 Spoke Front Wheels w/ OEM Style Hub



36-746

Pre 1999 Models Front
Softail®/Dyna Wide Glide®
FXST/FXDWG (except FXSTS) Single Disc 84/99

36-746* 21"x 2.15", Tapered Bearing, 3/4" axle. OEM style hub
36-752 21"x 3.25", Tapered Bearing, 3/4" axle. OEM style hub

* Denotes OEM Size Stock Wheel

Ultima® Chrome 60 Spoke Front Wheels w/ Billet Hub



36-412

2000 & Later Models - Front
Softail®/Dyna Wide Glide®
FX/FL 00/06, FXDWG 00/05 Single Disc (except FXSTS, FLSTS)

36-417 18"x 3.50", Ball Bearing, 3/4" axle. **Billet Hub**
36-412* 21"x 2.15", Ball Bearing, 3/4" axle. **Billet Hub**
36-490 21"x 3.50", Ball Bearing, 1" axle, single disc. **Billet Hub**
36-491 21"x 3.50", Ball Bearing, 1" axle, dual disc. **Billet Hub**
36-500 23"x 3.50", Ball Bearing, 1" axle, dual disc. **Billet Hub**
36-502 26"x 3.50", Ball Bearing, 1" axle, dual disc. **Billet Hub**

Pre 1999 Models Front
Softail®/Dyna Wide Glide®
FXST/FXDWG Single Disc 84/99 (except FXSTS)

36-961* 21"x 2.15", Tapered Bearing, 3/4" axle. **Billet Hub**

Ultima® Chrome 60 Spoke Rear Wheels w/ OEM Hub



36-735

Pre 1999 Models - Rear Wide Tire

36-735 Wide Tire, 16"x 5.50", Tapered Bearing, 3/4" axle. OEM style hub.
36-736 Wide Tire, 18"x 5.50", Tapered Bearing, 3/4" axle. OEM style hub.

Ultima® Chrome 60 Spoke Rear Wheels w/ Billet Hub



36-415

Standard & Wide Tire

36-970• 16"x 3.5", Ball Bearing, 1" axle. **Billet Hub**
36-969 18"x 5.50", Ball Bearing, 1" axle. **Billet Hub**
36-960 18"x 8.50", Ball Bearing, 1" axle. **Billet Hub**
36-415 18" x 10.50", Ball Bearing, . 1" axle, **Billet Hub**

ULTIMA® COMPLETE CHROME 80 SPOKE WHEELS

Ultima® 80 Spoke Chrome Front Wheels w/ OEM Style Hub Pre 1999 Models



36-332

* Denotes OEM Size Stock Wheel

Pre 1999 Models Front
FL Dual Disc 73/84
36-341* 16"x 3.00", Tapered Bearing, 3/4" axle. OEM style hub
36-343 16"x 3.00", Tapered Bearing, 3/4" axle. OEM style hub, **Twisted Spoke**

FXST/FXDWG (except FXSTS) Single Disc 84/99
36-347 16"x 3.00", Tapered Bearing, 3/4" axle. OEM style hub
36-349 16"x 3.00", Tapered Bearing, 3/4" axle. OEM style hub, **Twisted Spoke**
36-397 19"x 2.50", Tapered Bearing, 3/4" axle. OEM style hub
36-332* 21"x 2.15", Tapered Bearing, 3/4" axle. OEM style hub
36-745* 21"x 2.15", Tapered Bearing, 3/4" axle. OEM style hub, **Twisted Spoke**

FLSTSingle Disc 86/99
36-353* 16"x 3.00", Tapered Bearing, 3/4" axle. OEM style hub
36-355 16"x 3.00", Tapered Bearing, 3/4" axle. OEM style hub, **Twisted Spoke**



TWISTED SPOKES

Ultima® 80 Spoke Chrome Rear Wheels w/OEM Style Hub Pre 1999 Models



36-341

5

REAR WHEELS:
FX/XLChain 73/84 (Note: must use flat sprocket)
36-341* 16"x 3.00", Tapered Bearing, 3/4" Axle
36-343 16"x 3.00", Tapered Bearing, 3/4" Axle, **Twisted Spoke**

XL Belt Rear 84/99 FX/FL Dyna®, Softail® except Touring - Belt Rear 84/99. Chrome Spoke
36-359* 16"x 3.00", Tapered Bearing, 3/4" Axle
36-361 16"x 3.00", Tapered Bearing, 3/4" Axle, **Twisted Spoke**

Ultima® 80 Spoke Chrome Rear Wheels Billet Style Hub Wide Tire Custom



36-416

Stock & Wide Tire
36-971• 16"x 3.5", Ball Bearing, 1" Axle
36-419 18"x 5.50", Ball Bearing, 1" Axle
36-414 18"x 8.50", Ball Bearing, 1" Axle
36-416 18"x 10.50", Ball Bearing, 1" Axle

ULTIMA® COMPLETE CHROME 80 SPOKE WHEELS



36-411

* Denotes OEM Size Stock Wheel

Ultima® Chrome 80 Spoke Front Wheels w/ Billet Hub Pre 1999 Model

Pre 1999 Models Front
FXST/FXDWG (except FXSTS) Single Disc 84/99

36-411* 21"x 2.15", Tapered Bearing, 3/4" axle. **Billet Hub**

Ultima® Chrome 80 Spoke Front Wheels w/ Billet Style Hub 2000 & Later

FX/FL 00/06, FXDWG 00/05 Single Disc (except FXSTS, FLSTS)

36-418 18"x 3.50", Ball Bearing, 3/4" axle. **Billet Hub**
36-413* 21"x 2.15", Ball Bearing, 3/4" axle. **Billet Hub**
36-497 21"x 3.50", Ball Bearing, 1" axle, single disc. **Billet Hub**
36-498 21"x 3.50", Ball Bearing, 1" axle, dual disc. **Billet Hub**
36-503 23"x 3.50", Ball Bearing, 1" axle, dual disc. **Billet Hub**
36-505 26"x 3.50", Ball Bearing, 1" axle, dual disc. **Billet Hub**



36-505

ULTIMA® SOLID BILLET WHEELS

For the smooth & clean look, you can't go wrong with Ultima's® polished aluminum solid billet wheels.

FRONT WHEELS

PART NUMBER	RIM SIZE	DISC	ROTOR/ PULLEY	BEARING TYPE	AXLE SIZE
37-550	16 X 3.5	Single	86-99	Tapered roller	.750"
37-554	16 X 3.5	Single	00-LTR	Sealed Ball	.750"
37-555	16 X 3.5	Dual	00-LTR	Sealed Ball	1"

REAR WHEELS

PART NUMBER	RIM SIZE	ROTOR/ PULLEY	BEARING TYPE	AXLE SIZE
37-551	16 X 3.5	86-99	Tapered roller	.750"
37-552	18 X 3.5	86-99	Tapered roller	.750"
37-553	18 X 5.5	86-99	Tapered roller	.750"
37-556	16 X 3.5	00-LTR	Sealed ball	.750"
37-557	18 X 3.5	00-LTR	Sealed ball	.750"
37-558	18 X 5.5	00-LTR	Sealed ball	1"



37-550

37-557



WHEEL BEARING REMOVAL & INSTALLATION KIT

Wheel bearing removal and install tool is a must for every shop. Removes and installs 3/4 25mm & 1" sealed bearing for 2000-later wheels.

97-290 Wheel bearing removal & install kit. SOLD AS KIT

ULTIMA® WHEEL ACCESSORIES

Use MW# 33-295 Axle Reducer for 3/4" axle applications.





Center wheel spacers for all size wheels available near the back of this section.

TWIN CAM® REAR WHEEL BELT PULLEYS

5





Made from forged aluminum and CNC machined and hardened teeth.
Available in a black or silver powder-coated finish with contrast cut accents.

94-370 Silver, Rear Dyna 07-17 belt pulley 66T 1.0" wide
94-371 Black, Rear Dyna 07-17 belt pulley 66T 1.0" wide
94-372 Silver, Rear Touring 09-17 belt pulley 68T 1.0" wide
94-373 Black, Rear Touring 09-17 belt pulley 68T 1.0" wide

ULTIMA® CLASSIC SPOKE PULLEYS

1999 - EARLIER & 2000 - LATER

94-600 Pulley, chrome, 1.5", 65T.
94-601 Pulley, chrome, 1.5", 70T.
94-628 Pulley, chrome, 1-1/8", 70T.
94-629 Pulley, chrome, 1-1/8", 65T.
94-602 Pulley, chrome, 1", 65T.
94-603 Pulley, chrome, 1", 70T.
94-611 Pulley, polished, 1", 70T.

MATCHING BRAKE ROTORS AVAILABLE FURTHER IN THIS SECTION



ULTIMA® 7-SPOKE PULLEY



These pulleys are 66 tooth & meant for use with 1-1/8" drive belts. Fits Kawasaki Vulcans. Pulley ID 2.375"

94-701 7-Spoke pulley.

PULLEY BLANK

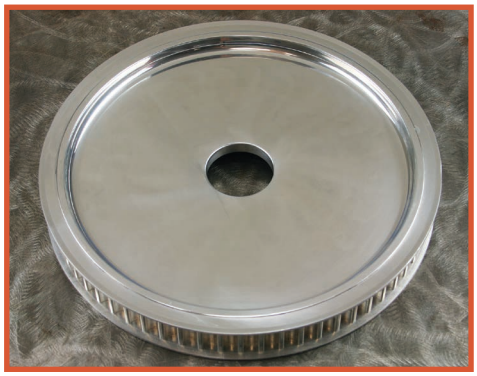

Billet aluminum undrilled pulley blank. 65T, accepts up to 1-3/8" belt width. Center ID measures 1.995". SOLD EACH

94-950 Pulley blank.

5

PULLEY MOUNTING HARDWARE KIT



Bolt & washer kit fits Big Twins 1993-1996, Dyna® 1997-1998 and FLT 1997-1998 w/cast rear wheels. Also fits Softails® 1997-1999, Dyna® 1999 and FLT 1999-up w/spoke or cast rear wheel. 7/16-14 thread.

41-463 Drive pulley hardware kit. OEM 3730A, 3899.

HARDWARE KIT FOR FLOATING ROTORS



This front floating brake rotor mounting hardware kit includes all required hardware for mounting the new-style front floating brake rotors. Kit contains five each of the bushings, spring washers & mounting screws. Replaces OEM# 41500018 (bushings) 41500019 (spring washers) 41500020 (screws) Sold as a kit. Fits: 2014-2018 FLHT/FLTR/FLHR/FLHX models with lug-mounted rotor wheels.

41-425 Front floating brake rotor 2014-2018 FL hardware kit.

FLOATING ROTORS

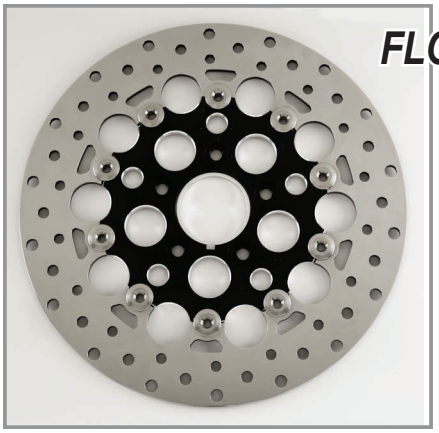



90-890 Rotor, Floating, Mesh, 11.5", '84-'99 & '00-Later, FT w/ speedo notch

90-891 Rotor, Floating, Mesh, 11.5", '84-'99 & '00-Later, RR

90-892 Rotor, Floating, Mesh, 11.8", '08-'13 Touring & '06-'09 Dyna, FT

90-893 Rotor, Floating, Mesh, 11.8", '08-'13 Touring & '06-'09 Dyna, RR

90-894 Rotor, Floating, Spoked, 11.5", '84-'99 & '00-Later, FT w/ speedo notch

90-895 Rotor, Floating, Spoked, 11.5", '84-'99 & '00-Later, RR

90-896 Rotor, Floating, Spoked, 11.8", '08-'13 Touring & '06-'09 Dyna, FT

90-897 Rotor, Floating, Spoked, 11.8", '08-'13 Touring & '06-'09 Dyna, RR

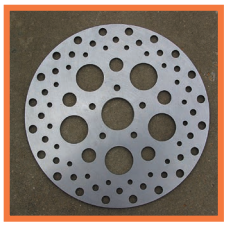

ULTIMA® POLISHED OR SATIN FINISH STAINLESS STEEL BRAKE ROTORS

Surface hardened with high chrome content on A1S1 #420 stainless plate material. Precision blanchard grinding and CNC machined holes make for a great fitting part. Superior braking performance whether it's wet or dry.

APPLICATION	OEM NUMBER	DIA./ID	BOLT PATTERN	SATIN FINISH	POLISH FINISH
FX & FXR , Front, with dual disc, 1977 thru 1983. Uses stock mounting hardware.	44137-77A	10"/1.990"	Countersunk	**90-762**	**90-764**
FX & FL, Rear, 1978 thru 1980. FL Front, 1978 thru 1984. Uses stock mounting hardware.	41813-79	10"/1.990"	Counterbore	**90-763**	**90-765**
FX & Softail®, Rear, 1981-1999. XL Rear, 1979 & later. FXR Rear, 1982 thru 1991. Uses stock mounting hardware.	41791-79A	11-1/2"/1.990"	Countersunk	**90-768**	**90-767**
All Front, single or dual, 1984 thru 1999 (two required for dual disc applications).	44136-84A	11-1/2"/1.990"	Counterbore	**90-754**	**90-756**
Big Twin and Sportster®, Rear, 1992-1999, except FLT models.	41789-92	11-1/2"/1.990"	Counterbore	**90-755**	**90-757**
All models, Front, 2000 & later	44156-00	11-1/2"/2.220"	Counterbore	**90-758**	**90-760**
All models, Rear, 2000 & later	41797-00	11-1/2"/2.220"	Counterbore	**90-759**	**90-761**

ALL DISCS SOLD EACH

5

A. OEM STYLE ROTORS (POLISHED STAINLESS STEEL)

90-620 Rotor, 11.5" front, 84'- 99' & 00'-later (w/speedo notch)
90-623 Rotor, 11.5" rear, 84'- 99' & 00'-later

B. CLASSIC SPOKE ROTORS (POLISHED STAINLESS STEEL)

90-624 Rotor, 11.5" front, 84'- 99' & 00'-later (w/speedo notch)
90-625 Rotor, 11.5" rear, 84'- 99' & 00'-later
90-626 Rotor, 11.8" front, 08'- 13' Touring & 06'- 09' Dyna
90-634 Rotor, 11.8" Rear, 08'- 13' Touring & 06'- 09' Dyn

C. KING SPOKE ROTORS (POLISHED STAINLESS STEEL)

90-610 Rotor, 11.5" front, 84'- 99' & 00'-later (w/speedo notch)
90-613 Rotor, 11.5" rear, 84'- 99' & 00'-later
90-615 Rotor, 11.8" front, 08'- 13' Touring & 06'- 09' Dyna
90-619 Rotor, 11.8" Rear, 08'- 13' Touring & 06'- 09' Dyn

Rotors utilize reducer spacers to achieve multi-year applications.
Rotors have 2.220" center hole. Reducer spacer has 1.975" center hole.

A

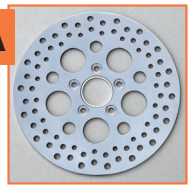

90-623

B



90-624

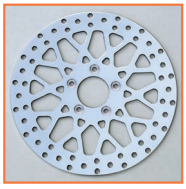

90-626

C



90-613



90-619



90-606

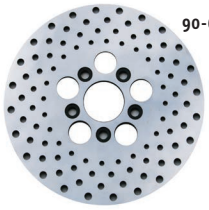

90-605

DISC BRAKE ROTORS

Rotors of the finest quality steel or stainless steel. Precision machined and precision ground to OEM specifications. Steel rotors are zinc plated to resist corrosion and maintain "as new" appearance. Stainless steel rotors are mirror finished. ALL DISCS SOLD EACH

APPLICATION	OEM NO.	DIA-METER	BOLT PATTERN	DRILLED	MIRROR FINISH STAINLESS STEEL DRILLED
FX Rear, 1973 thru 1978. XL & FX, Front, with single disc, 1973. FL Front & Rear, 1972 thru 1978.	41806-72B	10"	Straight hole	**90-207**	**90-605**
FX & XL Front, with single disc, 1974 thru 1977.	41807-74	11-1/2"	Countersunk	**90-206**	**90-606**
FX, FXR & XL Front, with dual disc, 1977 thru 1983.	44137-77A	10"	Countersunk	**90-205**	**90-607**
FX & FL Rear, 1978 thru 1980. FL Front, 1978 thru 1984.	41813-79	10"	Counter bore	**90-204**	**90-608**
FX & Softail®, Rear, 1981 thru 1999. FXR Rear, 1982 thru 1999. XL Rear, 1979 thru 1999.	41791-79A	11-1/2"	Countersunk	**90-278**	**90-609**
FL, FLT, FX, FXR, and XL, all Front, single or dual disc, 1984 thru 1999.	44136-84A	11-1/2"	Counterbore	**90-365**	**90-698**
Rear, all single & dual disc models, except V-Rod. 2000 & later.	41797-00	11-1/2"	Counterbore	**90-226**	**90-228**
Front, all single & dual disc models, except V-Rod. 2000 & later.	44156-00	11-1/2"	Counterbore	**90-227**	**90-229**

HARDWARE KITS FOR DISC BRAKE ROTORS

COLONY

REFERENCE

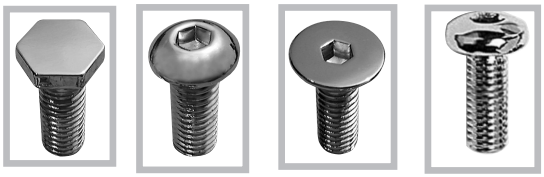

COLONY CHROME PART NO.	OEM NO.	HEAD STYLE REF.	QTY. PCS.	SIZE	APPLICATION
40-320	41198-73 & 7778	A	10	3/8-16 X 1"	Front & Rear rotor to hub thin hex head bolt & nut kit fits 1973 thru 1980 FL Rear, 1973 & 1974 FL Front, and 1973 FX & XL, Front.
41-751	41198-75	B	10	3/8-16 X 1"	Front & Rear rotor to hub bolt & nut kit fits 1973 thru 1980 FL Rear, 1973 & 1974 FL Front and 1973 FX & XL, Front.
41-752	41191-74	C	5	1/4-20 X 5/8"	Front Rotor to hub screw kit fits single disc, FX & XL, 1974 thru 1977.
41-753	3680	C	10	5/16-18 X 1"	Front rotor to hub screw kit fits dual disc FX & XL, 1978 thru 1982.
41-754	3655	D	5	5/16-18 X 7/8"	Front rotor to hub screw kit fits 1984-up FX, FXR, FLT & XL, single disc. (Dual disc requires two sets.)
41-755	1643	C	5	7/16-14 X 1-1/4"	Front or Rear rotor to hub screw kit fits 1980 & 1981 FLT.
41-756	3655 & 7739	D	10	5/16-18 X 7/8"	Front rotor to hub screw & nut kit fits 1984-up FXST & FXWG.
41-792	1605 & 1604	C	5	3/8-16 X 1-1/2"	Rear rotor to hub screw & nut kit fits 1979 thru 1999 FX & XL, and 1981 thru 1984 FL, spoke or cast wheel.
41-897	3680 & 3655	C	10	5/16-18 X 1"	Front rotor to hub screw & nut kit fits 1978 thru 1983 FXWG. (Dual disc requires two sets.)
41-901	1642	C	5	7/16-14 X 1-3/4"	Front or Rear rotor to hub screw kit fits 1982 thru 1985 FLT.
41-130	43562-92	D		3/8-16 X 1"	Rear rotor bolt kit fits all H-D® 1997 & later.
41-129	43567-92	D		3/8-16 X 1"	Rear rotor to hub hardware kit fits 1992 & later XL, FLT, Softail® & Dyna®.

SOLD AS KIT

5



ULTIMA® DISC ROTOR SPACERS

Ultima® disc rotor spacers are ideal for converting front ends to mid or wide glide & still retain proper rotor/disc spacing. Polished, billet aluminum. Wheel locating ID 1.995". Disc rotor locating OD 1.963".

90-580 Disc rotor spacer, .3125" (5/16)
90-582 Disc rotor spacer, .5000" (1/2)
90-583 Disc rotor spacer, .9375" (15/16)
90-585 Disc rotor spacer, 1.125" (1-1/8)
90-586 Disc rotor spacer, 1.4375" (1-7/16)
90-589 Disc rotor spacer, 1.625" (1-5/8)

ULTIMA® POLISHED & BLACK BILLET HUBS FOR NARROW GLIDE

ULTIMA

These billet hubs can adapt any of our Ultima® Aluminum Wheels for Narrow Glide, bring the style of Kool Kat®, Manhattan & Vortex wheels to your Narrow Glide.

37-800 Hub, Narrow Glide, Single Disc, Polished
37-801 Hub, Narrow Glide, Single Disc, Black
37-802 Hub, Narrow Glide, Dual Disc, Polished
37-803 Hub, Narrow Glide, Dual Disc, Black

NEW!

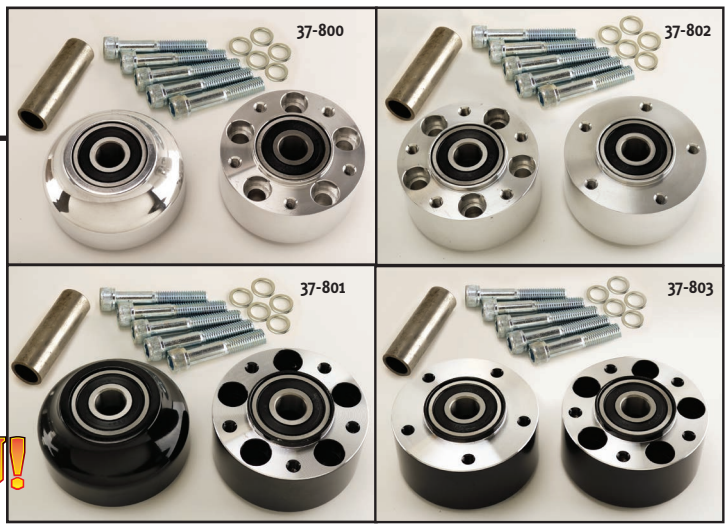

ULTIMA® STEEL CHROME RIMS



CHROME PLATED

40 HOLE

PART NO.	DIA.	TIRE WIDTH	REPLACES SIZE	OEM NO.	SEE NOTE
30-4	16"	3.00"	500/510-16	43085-81	1
Metal side valve stem hole.					
30-38	16"	3.00"	500/510-16	43007-40A	1
Rubber side valve stem hole. Uses inner tube part No. **2-19**.					
30-48	16"	3.50"	500/550-16		1
30-35	19"	2.50"	325/350-19		1
30-8	21"	1.85"	250/325-21		
30-11	21"	2.15"	325-21		1
30-50	21"	3.25"	120-21		

Custom style rims, some with drop center, to fit all popular tires front and rear. SOLD EACH
Width is measured by inside bead.

NOTE 1: Drop center.

5



31-89



31-96

SPOKE SETS

We are offering you the best quality and best priced chrome spokes available for lacing your custom rims. These are made from the strongest and most flexible steel and then dipped in a show chrome lustre. The tapered 6-8 gauge dimension keeps the spokes strong in their most crucial area, the bend.

POLISHED STAINLESS STEEL PART NO.	CHROME STEEL PART NO.	TWISTED CHROME STEEL PART NO.	FOR RIM DIA.	HUB STYLE	WIRE GAUGE	SPOKES IN SET
				FRONT & REAR WHEEL SPOKE SETS		
31-88	**31-80**	**31-94**	16"	H-D® 74", 80" & Sportster® hub (steel).	6/8	40
				FRONT WHEEL SPOKE SETS		
31-89	**31-87**	—	18" or 19"	Sportster® & Super Glide® with disc brake to 18" custom rim or 19" drop center rim.	6/8	40
—	**31-84**		19"	Sportster® & Super Glide® with disc brake to custom rim.	6/8	40
—	**31-85**		21"	Sportster® & Super Glide® with disc brake to custom rim.	6/8	40
N/A	**31-81**	—	18" or 19"	H-D® 74" steel hub to 18" custom rim or 19" drop center rim.	6/8	40
31-92	**31-82**		19"	H-D® 74" steel hub to 19" custom rim.	6/8	40
31-93	**31-83**	**31-96**	21"	H-D® 74" steel hub to 21" custom rim.	6/8	40



4-650

A



4-653



4-655

Vee Rubber
PERFORMANCE TIRES

A VRM302 TWIN

- High mileage compound • All weather construction
- Tubeless construction • DOT H-rated approved
- Front tire for use w/Monster rears • Sold each

PART #	SIZE	STYLE	SIDEWALL
4-650	180/60HB16	Rear Bias	Black
4-651	200/60HB16	Rear Bias	Black
4-652	200/55HR17	Rear Radial	Black
4-653	200/50HR18	Rear Radial	Black
4-654	MH90H21	Front Bias	Black
4-655	90/90H21	Front Bias	Black
4-676	120/70H21	Front Bias	Black

5



4-657

B



4-667

B VRM302 MONSTER

- High mileage compound • All weather construction
- Tubeless construction • DOT H-rated approved
- Applications for all chopper style rims • Sold each

PART #	SIZE	STYLE	SIDEWALL
4-656	260/35HR18	Rear	Black
4-657	310/35HR18	Rear	Black
4-667	360/30HR18	Rear	Black
4-702	150/80 B16	Rear	Black
4-703	150/60 B18	Rear	Black
4-704	180/50 R18	Rear	Black
4-705	MT90 B16	Rear	Black
4-660	120/70HR23	Front	Black
4-661	120/50HR26	Front	Black
4-676	120/70H21	Front	Black
4-700	100/90-19	Front	Black
4-701	MT90 B16	Front	Black



4-660



4-661

C



4-709

4-710

C VRM393 Heavy Touring/Cruiser

- Designed specifically for heavy touring & cruiser motorcycles
- Superior long wearing compound for touring
- Outstanding wet and dry adhesion for all weather conditions
- High load ratings to carry passengers and luggage
- Casing structure allows excellent handling in corners

PART #	SIZE	STYLE	SIDEWALL
4-709	80/90-21	Front	Black
4-710	130/90-16	Rear	Black
4-711	150/80-16	Rear	Black

Vee Rubber
PERFORMANCE TIRES

D VRM191/192

- Front & rear designed w/new compound for improved mileage
- Excellent traction in all-weather conditions
- Tubeless construction • DOT H-rated approved • Sold each

PART #	SIZE	STYLE	SIDEWALL
4-662	130/90H16	Rear	Black
4-663	140/90H16	Rear	Black
4-712	150/80H16	Rear	Black
4-664	100/90H18	Front	Black
4-665	90/90H19	Front	Black
4-666	100/90H19	Front	Black



4-666

4-664

E VRM302 TWIN "WHITE WALL"

• Specially formulated compound to deliver great grip in dry & wet riding & extended mileage.• Sidewall construction to accommadate 2-up riding & superior weight carrying capacity for the larger motorcycles.• 21" & 18" tires suited for touring bikes. • DOT H-rated approved • Sold each

PART #	SIZE	STYLE	SIDEWALL
4-670	150/60HB18	Rear Bias	White
4-671	MT90/HB16	Rear Bias	White
4-673	150/80HB16	Rear Bias	White
4-677	180/60R16	Rear Bias	White
4-675	200/50R18	Rear Bias	White
4-708	200/60 B16	Rear Bias	White
4-707	180/50 R18	Rear Bias	White
4-706	120/50H26	Front Bias	White
4-668	120/70H21	Front Bias	White
4-669	130/70H18	Front, Rear Bias	White
4-672	MT90/HB16	Front Bias	White
4-674	130/50HB23	Front Bias	White



4-671

4-708


4-670

4-707


4-674

4-669

KENDA TIRES

A

SPORT CHALLENGER



4-465 4-493 4-467 4-466 4-494

5

A. SPORT CHALLENGER

The Challenger is designed for riders who demand excellent handling and wet weather traction. The Challenger is constructed with an improved compound that combines high mileage with more responsive cornering and handling. Black wall. Tube/tubeless.

4-465 130/90H-16 K657 Rear.
4-493 130/90H-16 K657 Front.
4-467 140/90H-16 K657 Rear.
4-466 100/90H-19 K657 Front.
4-494 90/100H-21 K657 Front.

B K671 CRUISER S/T



4-496 4-497 4-574

B. K671 CRUISER S/T

This low profile sport tire design has a strong 6ply carcass. New, aggressive tread design provides excellent traction & performance. Matched front/rear tread pattern for superior stability & maximum handling. Deep, offset tread sipes provide for excellent water dispersion & wet weather traction. Wide contact patch for superior traction & increased mileage. Black wall. Tubeless.

4-496 130/90H-16 K671 Rear.
4-497 100/90H-19 K671 Front.
4-574 140/70P-16. K671 Rear.

C



4-570 4-571 4-572 4-573

C. K673 KRUZ

4-570 130/90H-16 K673 Front.
4-571 130/90H-16 K673 Rear.
4-572 100/90H-19 K673 Front.
4-573 80/90H-21 K673 Front.

KENDA TIRES NEW!

A. CATACLYSM

The Cataclysm tire's dual-compound technology provides higher mileage in the center and increased grip on the edges for optimal stability in cornering. The tread grooves were designed to more efficiently disburse water and minimize uneven wear. And the K6702's casing will handle the highest load-carrying capacity bikes on the market. With an H-speed rating (130 miles per hour or less), for long rides and heavy loads.

4-590	130/60-21 K6702 Front	**4-595**	130/70B-18 K6702 Front
4-591	130/90B-16 K6702 Front	**4-596**	140/90B-16 K6702 Rear
4-592	90/90-21 K6702 Front.	**4-597**	130/90B-16 K6702 Rear
4-593	100/90B-19 K6702 Front	**4-598**	180/65B-16 K6702 Rear
4-594	130/80B-17 K6702 Front.	**4-599**	150/80B-16 K6702 Rear



DUAL & SINGLE FLANGE WHEEL HUBS

Chrome hub assemblies fit the front and rear of many H-D® models 1936 & later. Most hubs contain all the internal components. Bearing preload is set at the manufacturer. Available with 7/16" or 5/16" holes in flanges.

A.
Dual flange hub, 7/16" holes on both sides. Fits 1973 thru 1985 FL & FX, front or rear. Replaces OEM 43540-73A.
33-210 80 Spoke holes.

SOLD EACH

B.
Dual flange hub, 5/16" holes on both sides. Fits FXWG 1980 thru 1983, front. Replaces OEM 43663-80A.
33-195 40 Spoke holes. SOLD EACH
33-211 80 Spoke holes.

C.
Single flange hub, 5/16" holes. Use on 1972 thru 1984 FLH Wide Glide® front ends.
33-196 40 Spoke holes.

SOLD EACH

D.
Single flange hub, 5/16" holes. Fits 1984 thru 1999 FXST, FXSTC & FXDWG, front. OEM 43672-84.
33-199 40 Spoke holes. OEM 43672-84. SOLD EACH
33-280 60 Spoke holes.
33-213 80 Spoke holes.

E.
Single flange hub, 5/16" holes. Fits 1986 thru 1999 Softail® FLSTC, FLSTN & FLSTF, front. OEM 43053-86.
33-200 40 Spoke holes. SOLD EACH
33-214 80 Spoke holes.

F.
Dual flange hub, 7/16" - 3/8" holes. Fits Softail® FXR & FXD 1986 thru 1999, rear, and Sportster® 1979 thru 1999 rear. OEM 40976-86.
33-201 40 Spoke holes. SOLD EACH
33-281 80 Spoke holes.

G. thru N. Hubs on next page . . .



33-210



33-195

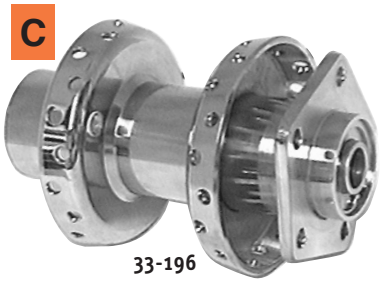

33-196


33-199



33-280


33-213

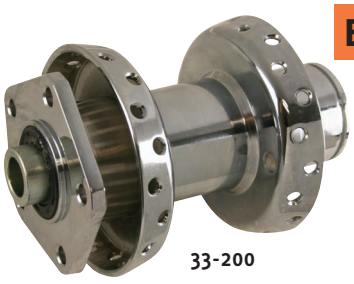

33-200


33-214

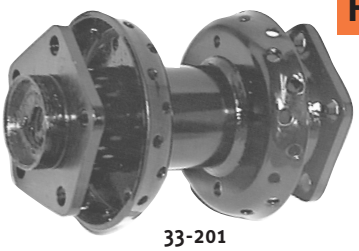

33-201


33-281



33-222



33-216



33-220

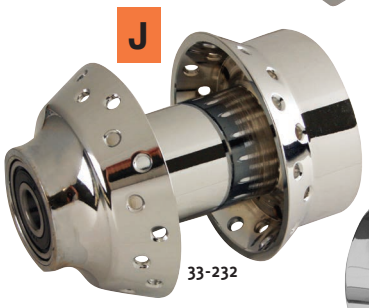

33-232

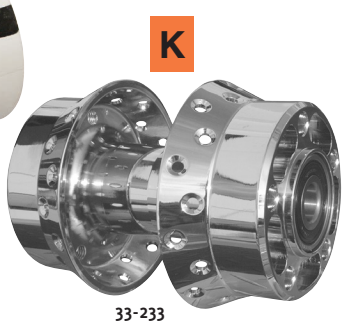

33-233



33-234

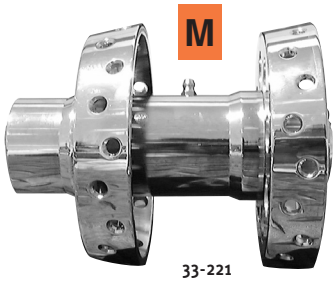

33-221

DUAL & SINGLE FLANGE WHEEL HUBS

Chrome hub assemblies fit the front and rear of many H-D® models 1936 & later. Most hubs contain all the internal components. Bearing preload is set at the manufacturer. Available with 7/16" or 5/16" holes in flanges.

SEE NEXT PAGE FOR SPORTSTER® 1955 THRU 1978 ALL HUBS CHROME PLATED

G.

Dual flange hub, 5/16" - 18 holes both sides. Fits narrow Front ends, single or dual disc, 1978 thru 1983 FX & Sportster®, and 1982 & 1983 FXR Front. OEM 43600-78.

33-222 40 Spoke holes. SOLD EACH

H.

Chrome billet dual flange hub, 5/16" - 18 holes both sides. Fits narrow front ends single or dual disc, 1984 thru 1999, FX, FXR, FXD, and XL, front. OEM 43619-84.

33-216 40 Spoke holes. SOLD EACH

I. Fits 1987 thru 1999 FLT models, and 1994 & later Road King® FLHR.

33-220 Rear, 40 spoke holes. OEM 41020-86. SOLD EACH

J.

Single flange hub, 5/16" - 18 holes. Fits 2000 & later all Softail® models and FXDWG Dyna®, front.

33-232 40 Spoke holes. OEM 43672-00. SOLD EACH

K .

Dual flange hub, 7/16" and 3/8" holes. Fits 2000 & later all Softail® models, all Dyna® models, and all Sportster® models, rear.

33-233 40 Spoke holes. OEM 40976-00. SOLD EACH

L.

Dual flange hub, 5/16" - 18 holes both sides. Fits narrow front ends single or dual disc 2000 & later Dyna® & Sportster® models, front.

33-234 40 Spoke holes. OEM 43629-00. SOLD EACH

M .

Dual flange hub, fits 16" x 300" rim on Sportster® wheel 1955 thru 1978.

33-221 40 Spoke holes. OEM 41017-66A. SOLD EACH

WHEEL HUB WITH DRUM BRAKES FOR SPORTSTER® 1954 THRU 1978

ALL PARTS SOLD EACH

1	**95-185**	OIL SEAL (OEM 41210-55)
2	**95-149**	BEARING (OEM 9008)
3	**33-221**	COMPLETE HUB 1955 / 1978. CHROME (OEM 41017-66A)
4	**—**	BEARING (OEM 9009)
5	**32-104**	AXLE ONLY. CHROME HEAD (OEM 41551-52)
6	**32-135**	AXLE COLLAR. CHROME **U.S.A. MADE** (OEM 41598-52)

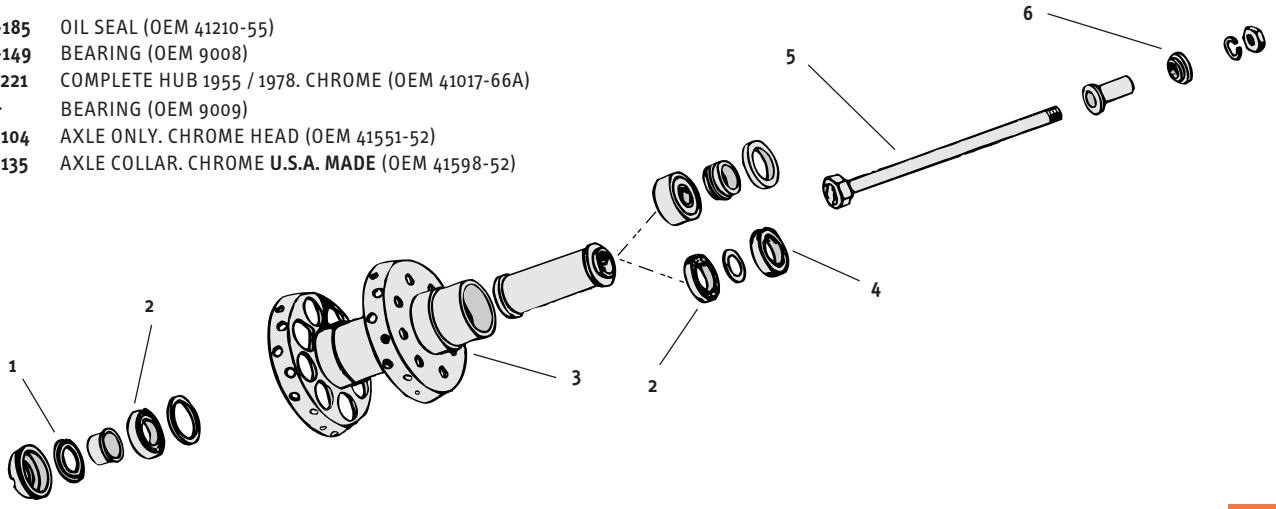

WHEEL WITH DRUM BRAKES FOR SPORTSTER® 1954 THRU 1978

ALL PARTS SOLD EACH

1	**95-185**	OIL SEAL (OEM 41210-55)
3	**—**	CHROME PIVOT BOLT, WASHER & SPACER KIT 1973 / 1978. COLONY
4	**—**	BRAKE PIVOT STUD 1954 / 1972 **U.S.A. MADE** (OEM 41876-54)
5	**—**	BEARING (OEM 9009)
6	**32-104**	AXLE ONLY. CHROME HEAD (OEM 41551-52)
7	**32-135**	AXLE COLLAR. CHROME **U.S.A. MADE** (OEM 41598-52)
8	**—**	16 PIECE CHROME BRAKE DRUM TO HUB SHOULDER BOLT & LOCK NUT KIT. COLONY (OEM 3970B & 7725)
9	**90-84**	BLACK BRAKE DRUM & SPROCKET (OEM 41404-52)
	90-85	CHROME BRAKE DRUM & SPROCKET (OEM 41404-52)

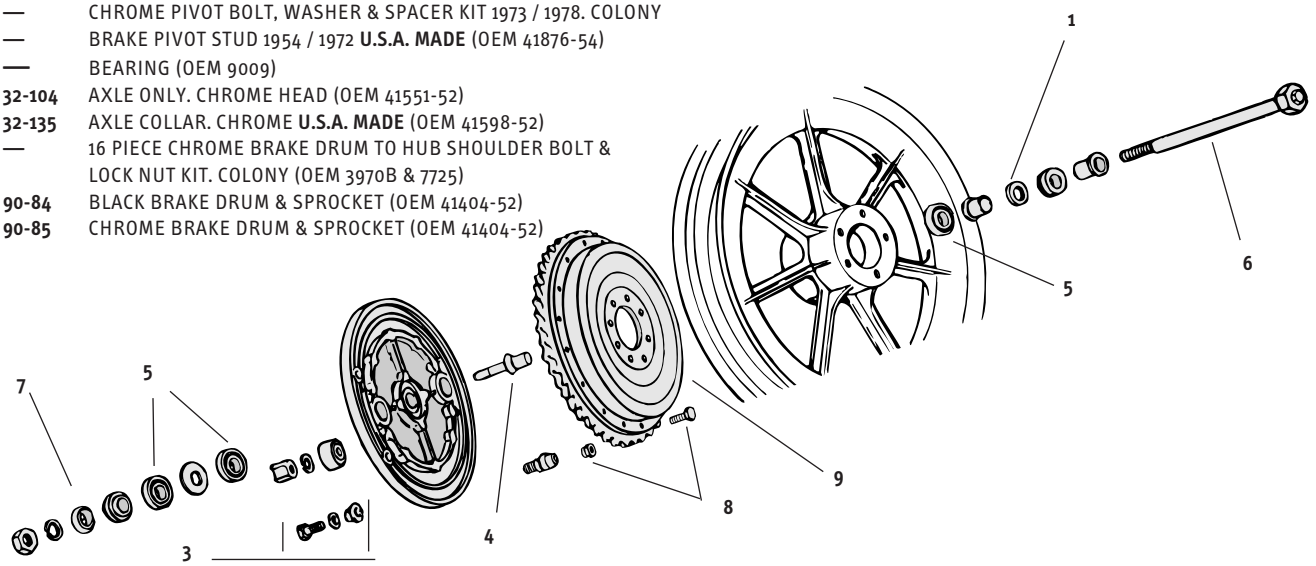

WHEEL WITH DISC BRAKES FOR SPORTSTER® 1979 & LATER

ALL PARTS SOLD EACH

1	**95-235**	OIL SEAL .315" WIDE (OEM 47519-72)
2	**33-184**	HUB RETAINING RING **U.S.A. MADE** (OEM 11027)
3	**33-187**	HUB WASHER (OEM 43559-73)
4	**95-446**	TAPERED BEARING WITH RACE. TIMKEN (OEM 9052)
5	**94-95**	51 TOOTH SPROCKET 1979 / 1981. PLAIN METAL (OEM 41470-73)
	94-96	51 TOOTH SPROCKET 1979 / 1981. CHROME (OEM 41470-73)

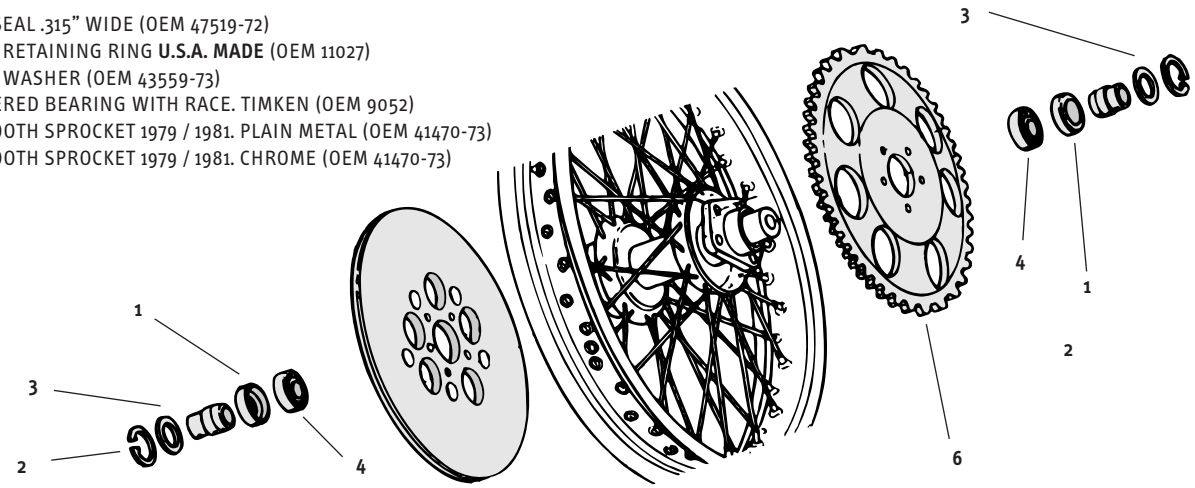

FRONT & REAR WHEEL PARTS FOR BIG TWIN & SUPER GLIDE® 1935 THRU 1966

ALL PARTS SOLD EACH EXCEPT AS NOTED

1	**33-118**	CHROME SCREW KIT FOR STAR COVER. FIVE SCREWS & FIVE WASHERS. COLONY. SOLD AS KIT
2	**33-109**	.002" SHIM **U.S.A. MADE** (OEM 43560-35)
3	—	SLEEVE (OEM 43556-35)
4	**33-180**	THRUST WASHER **U.S.A. MADE** (OEM 43563-35)
5	**33-194**	THRUST WASHER **U.S.A. MADE** (OEM 43552-39)
6	**95-308**	ROLLER RETAINER (OEM 24721-30)
7	**33-193**	THRUST WASHER **U.S.A. MADE** (OEM 43558-39)
8	**32-111**	FRONT AXLE SLEEVE 1948 / 1966 **U.S.A. MADE** (OEM 43882-48)
9	**32-132**	FRONT AXLE SLEEVE 1967 / 1972 **U.S.A. MADE** (OEM 43882-67)
10	**32-106**	REAR AXLE SLEEVE 1958 / 1962 **U.S.A. MADE**
	32-107	REAR AXLE SLEEVE 1963 / 1966 **U.S.A. MADE**
11	**33-24**	CHROME LUG SCREW 1936 / 1972 (OEM 43530-35)
12	**90-367**	CHROME REAR BRAKE BACKING PLATE BIG TWIN 1958 / 1962 (OEM 41650-58)
	90-368	CHROME REAR BRAKE BACKING PLATE BIG TWIN 1963 / 1972 (OEM 41650-63)
13	**32-172**	CHROME REAR SIDE PLATE SPACER 1958 / 1962 **U.S.A. MADE** (OEM 41596-58)
	32-171	CHROME REAR SIDE PLATE SPACER 1963 / 1972 **U.S.A. MADE** (OEM 41596-63)
14	**32-119**	REAR AXLE NUT & LOCK KIT 1930 / 1972. COLONY. SOLD AS KIT
15	—	BEARING 1967 / 1972 (OEM 43577-67)
16	**95-185**	OIL SEAL (OEM 41210-55)

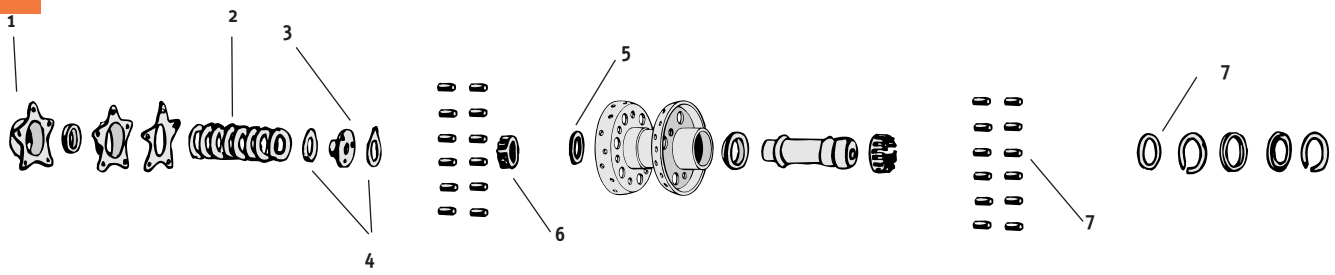

FRONT BRAKE

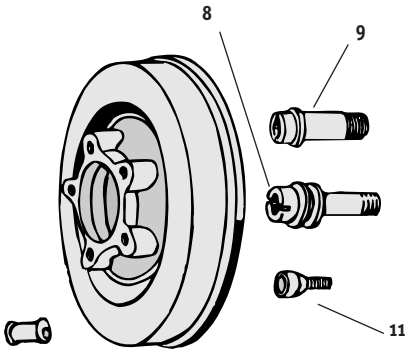

REAR BRAKE

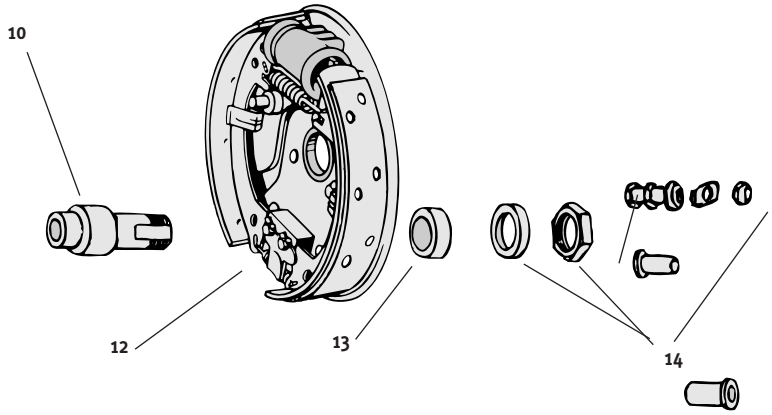

1967 THRU 1972

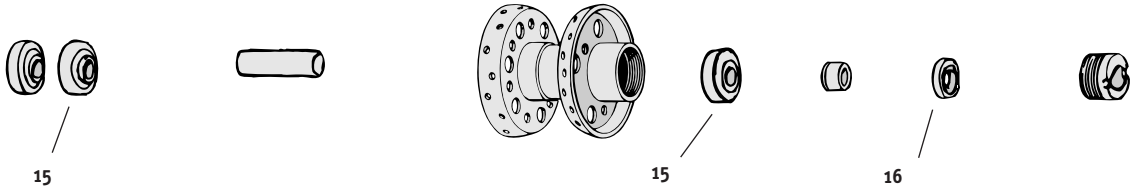

SPOKE WHEELS WITH DRUM BRAKES FOR SPORTSTER® & SUPER GLIDE® 1954 THRU 1972

ALL PARTS SOLD EACH

1 — BEARING (OEM 9009)
2 **95-149** BEARING (OEM 9008)
3 **32-133** CHROME AXLE (OEM 43871-52)
4 — CHROME NUT & WASHER (OEM 43886-52)

1964/1972 XLCH & XLH

1954/1963 KH, XL, XLCH & XLH

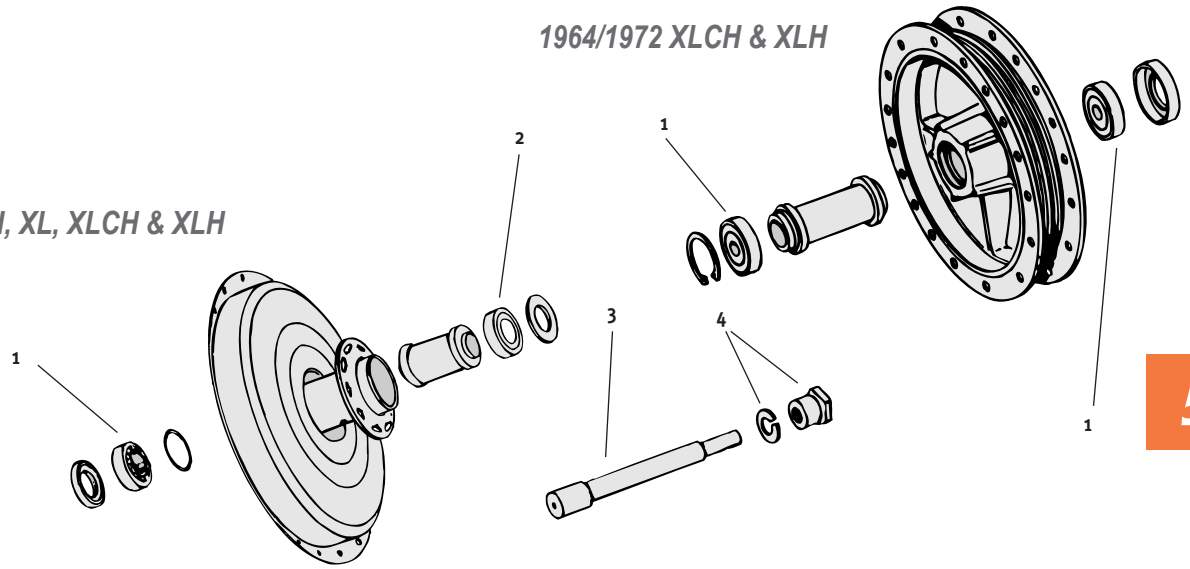

5

SPOKE AND CAST WHEEL WITH DISC BRAKE FOR SPORTSTER® & SUPER GLIDE® 1973 & LATER

ALL PARTS SOLD EACH

1 **95-235** OIL SEAL .315" WIDE (OEM 47519-72)
2 **33-184** HUB RETAINING RING **U.S.A. MADE** (OEM 11027)
3 **33-187** HUB WASHER (OEM 43559-73)
4 **95-446** TAPERED BEARING WITH RACE. TIMKEN (OEM 9052)
— TAPERED BEARING WITH RACE. IMPORT (OEM 9052)

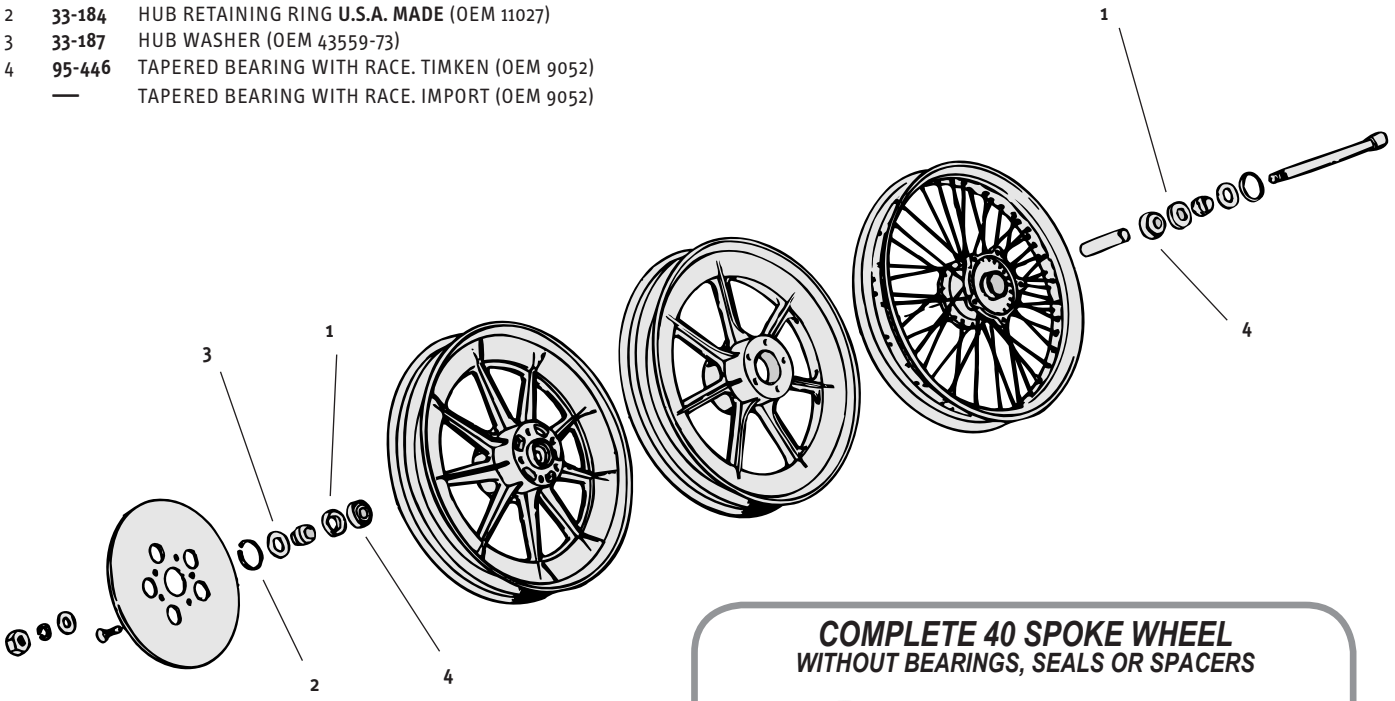

COMPLETE 40 SPOKE WHEEL
WITHOUT BEARINGS, SEALS OR SPACERS



CHROME PLATED

36-304 16" Front or rear, FL 1967 thru 1972. OEM 40982-67. SOLD EACH

FRONT & REAR WHEEL PARTS for FL, FLH & FX all MODELS, CAST & SPOKE WHEELS, 1973 THRU 1999

ALL PARTS SOLD EACH EXCEPT AS NOTED

1	**95-196**	OIL SEAL SPOKE WHEEL (OEM 47519-58)
	95-235	.315" WIDE OIL SEAL CAST WHEEL (OEM 47519-72)
	95-370	.410" WIDE OIL SEAL 1984 & LATER (OEM 47519-83A)
2	**33-182**	SMALL SPACER **U.S.A. MADE** (OEM 41196-73)
3	**33-184**	HUB RETAINING RING **U.S.A. MADE** (OEM 11027)
4	**95-446**	TAPERED BEARING WITH RACE. TIMKEN (OEM 9052) SOLD EACH
	—	TAPERED BEARING WITH RACE. IMPORT (OEM 9052) SOLD EACH
5	**33-187**	HUB WASHER **U.S.A. MADE** (OEM 43559-73)
6	**—**	40 HOLE COMPLETE DUAL FLANGE HUB ASSY. FL & FX FRONT OR REAR 1973 / 1985. CHROME (OEM 43540-73A)
7	**33-177**	4.420 "ORANGE" INNER WHEEL SPACER **U.S.A. MADE** (OEM 43601-78)
	33-178	4.434 "YELLOW" INNER WHEEL SPACER **U.S.A. MADE** (OEM 43602-78)
	33-183	4.448 "WHITE" INNER WHEEL SPACER **U.S.A. MADE** (OEM 43603-78)
8	**94-144**	48 TOOTH SPROCKET 4 SPEED 1973 / 1985. PLAIN METAL
	94-143	48 TOOTH SPROCKET 4 SPEED 1973 / 1985. CHROME
	94-141	49 TOOTH SPROCKET 4 SPEED 1973 / 1985. PLAIN METAL
	94-156	49 TOOTH SPROCKET 4 SPEED 1973 / 1985. CHROME
	94-95	51 TOOTH SPROCKET 4 SPEED 1973 / 1985. PLAIN METAL (OEM 41470-73)
	94-96	51 TOOTH SPROCKET 4 SPEED 1973 / 1985. CHROME (OEM 41470-73)
9	**96-176**	WASHER FL & FLH 1973 (OEM 33080-36)
10	**36-305**	COMPLETE 3.00 X 16 WHEEL ASSY. WITH CHROME DUAL FLANGE HUB FL FRONT OR REAR 1973 / 1984 & FX REAR 1973 / 1984 WITH STOCK STYLE CHROME SPOKES
11	**32-109**	CHROME REAR AXLE 1973 & LATER EXCEPT CLASSIC (OEM 41552-73)
12	**32-178**	REAR AXLE SPACER **U.S.A. MADE** (OEM 41595-73)
13	**32-170**	CHROME FRONT AXLE NUT & WASHER KIT WIDE GLIDE® 1972 & LATER. COLONY. SOLD AS KIT
	32-190	CHROME FRONT AXLE NUT & WASHER KIT FX & SPORTSTER® 1973 & LATER. COLONY. SOLD AS KIT

ADDITIONAL AXLE SPACERS & NUTS IN THIS SECTION

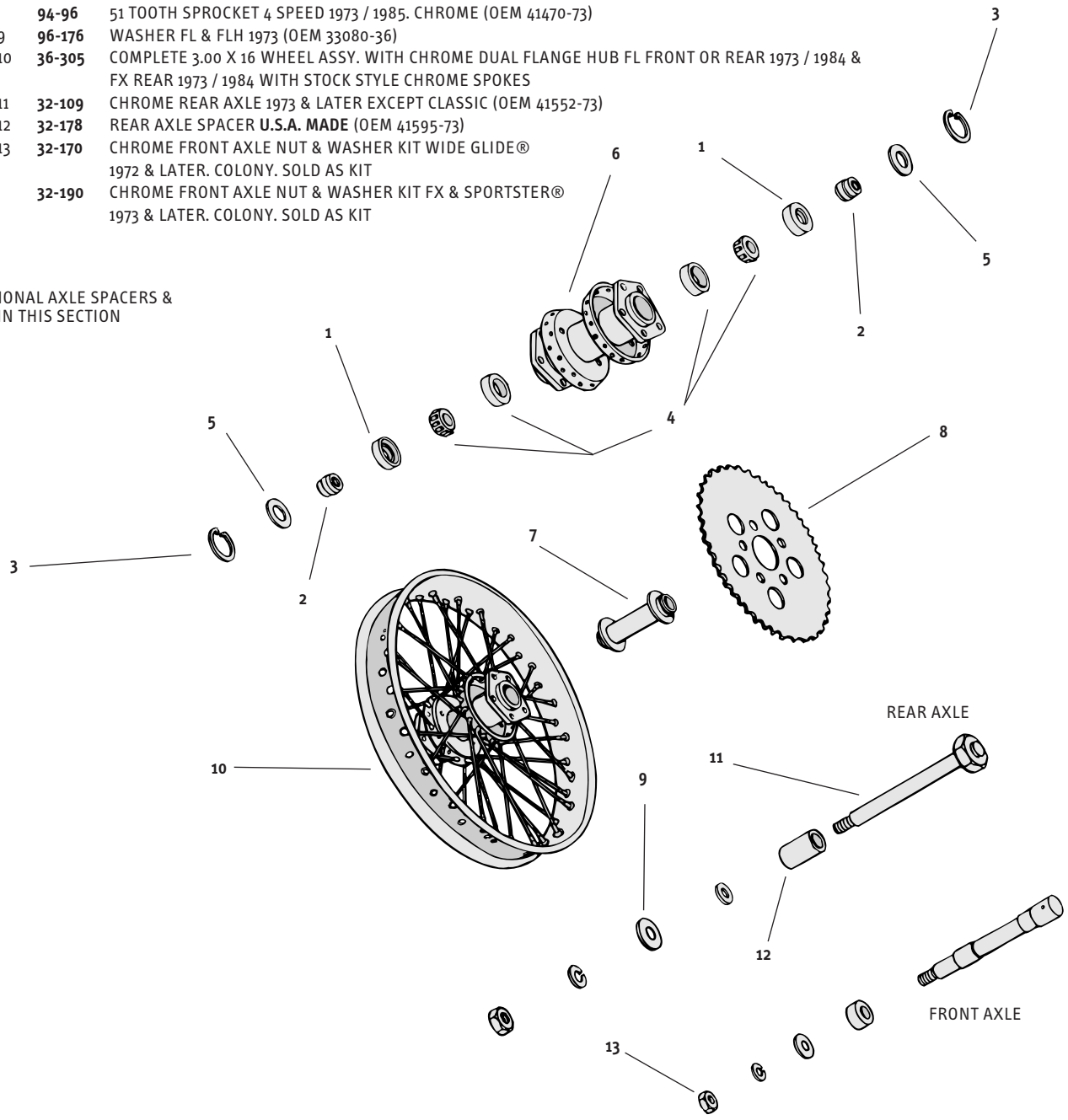

ULTIMA® BILLET ALUMINUM BRAKE CALIPERS AND BRACKETS

Ultima® 4 piston calipers feature an all new design for true custom style and premium performance. Available in polished or chrome plated finish with stainless steel fasteners. The new Ultima® caliper uses standard stainless steel pistons and anti-rattle springs for increased performance & excellent wear resistance. All Ultima® calipers offer reliable stopping power with great looks at an unmatched price.

A. ULTIMA® FOUR PISTON CALIPERS

90-675 Ultima® polished caliper. SOLD EACH
90-814 Ultima® chrome plated caliper.

REPLACEMENT PARTS

90-818 Rebuild kit for Ultima® calipers.
90-766 Replacement brake pads for Ultima® calipers (EBC)

B. CALIPER BRACKETS FOR ULTIMA® CALIPERS

90-808 Front, 1984 thru 1999 with 11.5" rotor (except FXSTS). Polished. SOLD EACH
90-809 Front, 1984 thru 1999 with 11.5" rotor (except FXSTS).Chrome plated. SOLD EACH
90-884 Front, 2000/later with 11.5" rotor (except FXSTS). Left, polished. SOLD EACH
90-886 Front, 2000/later with 11.5" rotor (except FXSTS). Left, chrome plated. SOLD EACH
90-885 Front, 2000/later with 11.5" rotor (except FXSTS). Right, polished. SOLD EACH
90-887 Front, 2000/later with 11.5" rotor (except FXSTS). Right, chrome plated. SOLD EACH
90-819 Brake Kit Springer & Paughco Springer, left or right, polished. SOLD AS KIT
90-888 Brake Kit Springer & Paughco Springer, left or right, chrome plated. SOLD AS KIT
90-677 Rear, FXR 1982 thru 1999. Polished.
90-815 Rear, FXR 1982 thru 1999. Chrome plated.
90-679 Rear, Dyna® 1991 thru 1999. Polished.
90-817 Rear, Dyna® 1991 thru 1999. Chrome plated.
90-880 Rear, Dyna® 2000/later. Polished.
90-881 Rear, Dyna® 2000/later. Chrome plated.
90-810 Rear, Softail® 1987 thru 1999. Polished. Will work with 3/4" or 1" axle.
90-811 Rear, Softail® 1987 thru 1999. Chrome plated. Will work with 3/4" or 1" axle.
90-882 Rear, Softail® 2000/later. Polished. Fits 3/4" or 25mm axle.
90-883 Rear, Softail® 2000/later. Chrome plated. Fits 3/4" or 25mm axle.

C. ULTIMA® DUAL REAR CALIPER BRACKETS

For FXST 87'-99 and most custom applications. Fits 3/4" or 1" axle. Brackets sold individually. Instructions included and available online @ www.ultimaproducts.com.

90-827 Dual rear caliper bracket, polished.
90-828 Dual rear caliper bracket, chrome.

ULTIMA® BLACK CALIPERS & BRACKETS
NEXT PAGE

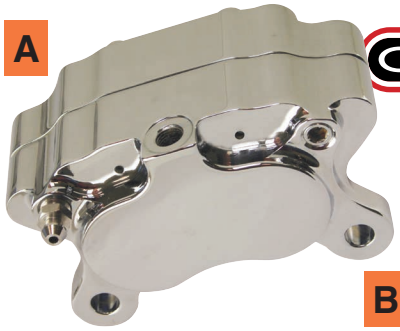







5











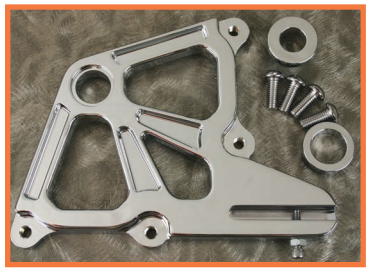



PATENT# D601936 90-828 ULTIMA® CALIPERS SOLD SEPERATELY



A



90-861



90-862



90-863

A. *ULTIMA® BLACK FOUR PISTON CALIPER & BRACKETS*

ULTIMA® BLACK FOUR PISTON CALIPER

90-860 Ultima® black caliper.

ULTIMA® BLACK CALIPER BRACKETS

90-861 Front, 1984 thru 1999 with 11.5" rotor (except FXSTS).
90-862 Rear, Softail® 1987 thru 1999. Will work with 3/4" or 1" axle.
90-863 Brake Kit Springer & Paughco Springer, left or right.
90-680* Rear FXR
90-681* Rear, Dyna

NEW!

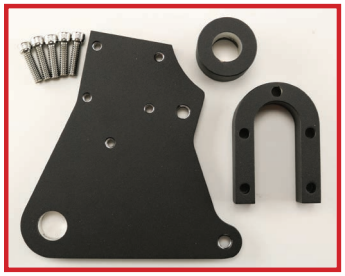

90-681

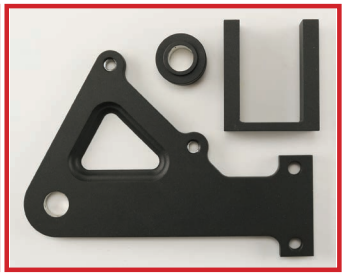

90-680



B

CHROME PLATED



C

CHROME PLATED



D

CHROME PLATED

B. *CHROME FRONT CALIPERS*

Fits Big Twin & Sportster® 1984 thru 1999. Includes Brake Pads,

90-436 Right caliper assembly. OEM 44023-83C. SOLD EACH
90-437 Left caliper assembly. OEM 44046-84C.

C. *CHROME REAR CALIPER*

"Hayes Type" rear caliper for Big Twin 1987 thru 1994 (except FLT, FLHT & FLHS) and Sportster® all models 1987 thru 1999.

90-434 Caliper assembly. OEM 44050-87. SOLD EACH

NOTE: Brake pads must be purchased separately.

D. *OVERSIZE CALIPER MOUNTING PIN REBUILD KIT*

This **U.S.A. MADE** kit replaces stock mounting pin by boring caliper holes oversize, giving longer life to the caliper housing before replacement. Poly bagged with instructions.

90-301 SOLD AS KIT

A. *FRONT CALIPERS 1984 THRU 1999*

Chrome plated caliper assemblies include mounting hardware and brake pads. Replaces late style calipers.

90-566 Chrome dual front caliper kit. Fits all models with dual disc 1984 thru 1999, also 1983 XR1000. SOLD AS KIT

90-562 Chrome single front (left) caliper kit. Fits all single disc models 1984 thru 1999.OEM 44046-84C.

90-561 Chrome replacement (right) caliper only. OEM 44023-83C.

A



B. *2000 & LATER CALIPERS & BRACKETS*

High quality, chrome, OEM replacement calipers and brackets for 2000 and later Harley Davidsons. All calipers come complete with brake pads. SOLD EACH

FRONT

90-836 Front right. Fits 04'-08' XL, OEM 44119-04.

REAR

90-839 Rear caliper bracket. Fits 06'-07' Softail®, OEM 42895-06.

90-842 Rear caliper bracket. Fits 08'-up Dyna®, OEM 42062-08.

90-844 Rear caliper. Fits 06'-07' Dyna®, OEM 44017-06.

90-846 Rear caliper & bracket. Fits 04' XL, OEM 40968-04.

90-848 Rear caliper & bracket. Fits 08'-up XL, OEM 40968-08. (not shown)

B



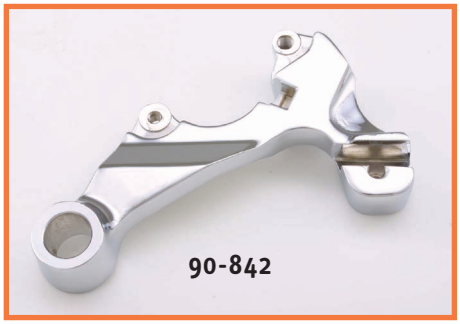







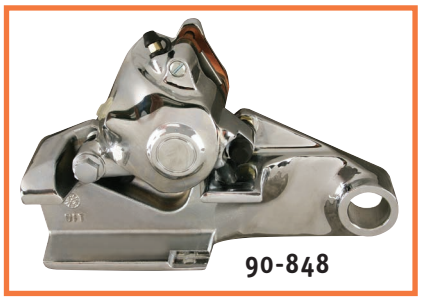

A



90-369

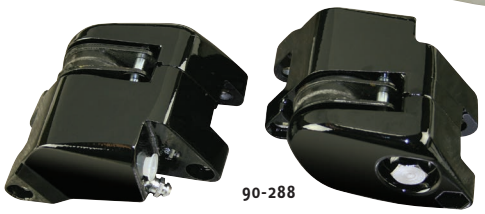

90-288

B



90-360



90-281

C



90-291

D

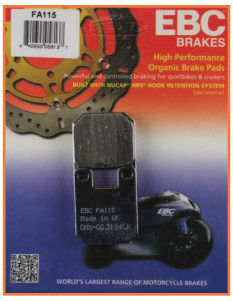

E



F



G



A. *FRONT DUAL DISC CALIPERS*

Brake caliper units for all H-D® models with dual disc front end 1977 thru 1983 (except FLT). Includes XLCR 1977 & 1978, XL 1979 thru 1983, FX 1977 thru 1983, and FXWG 1980 thru 1983.

90-369 Chrome plated left & right calipers. Replaces OEM 44025-80 & 44026-80. — SOLD AS PAIR

90-288 Black left & right calipers. Replaces OEM 44025-80 & 44026-80. — SOLD AS PAIR

90-302 Front caliper bushings. Replaces dual front, lower leg caliper bushings. One kit needed per caliper. OEM 46019-77 and 46018-77. — SOLD AS KIT

90-346 Brake pad pin. OEM 44162-77. — SOLD EACH

NOTE: Brake pads must be purchased separately.

B. *MIDWEST REAR DISC BRAKE CALIPERS*

Rear brake calipers for 4 speed Big Twins 1973 thru 1983. Caliper will work with boomerang type mounting bracket (OEM equipment thru 1980) or "Y" bracket used 1980 thru 1983. Contains everything needed to mount to either type mounting bracket, as well as bushings, pads, spring caliper support, rotor spacers, mounting pins and chrome plugs for unused mounting holes.

90-360 Chrome plated dual piston rear caliper. An internal crossover is used for brake fluid passage eliminating unsightly and troublesome external lines. This caliper increases stopping power, extends pad life and balances rotor wear. Seals are square section type, use our part No. **90-238** (2 required) for rebuilding.

C. *BRAKE CALIPER ASSEMBLIES*

A complete replacement brake caliper for FL 1973 thru 1980 rear, FL 1972 thru 1983 front, and FX 1973 thru 1980 rear. Replaces OEM 44001-78B. Fits the boomerang style mounting bracket part No. **90-231**.

90-281 Chrome brake caliper assembly. — SOLD EACH

90-291 Black brake caliper assembly.

NOTE: Brake pads must be purchased separately.

D. *REPLACEMENT BRAKE PADS FOR JAYBRAKE CALIPERS*

90-570 EBC brake pads (2). Fits 2 and 4 piston Jaybrake calipers. — SOLD AS SET

E. *REAR BRAKE CALIPER ANCHOR ARM BOLT KIT*

These stock replacement bolts, nuts, washers and cotter pins fit 1973 thru 1983 FL & FX.

83-11 Kit, chrome plated. — SOLD AS KIT

F. *REPAIR KIT FOR STRIPPED BRAKE CALIPERS*

Until now a stripped brake caliper bleeder screw meant riders were faced with the very high cost of replacing an entire brake caliper assembly. With this unique American made precision machined two-piece repair kit, a fast, safe, inexpensive and reliable fix is now available for most calipers in use today.

90-234 — SOLD EACH

G. *CALIPER MOUNTING STUD KIT*

U.S.A. MADE kit includes mounting stud, lock nut and washer, two brake pad pins (part No. **90-128**) and two steel caliper mount bracket bushings (part No. **90-129** & **90-130**).

90-127 Caliper mounting stud kit for FL, FLH, FLH-80 & Classic, 1973 thru 1983. Replaces OEM 44331-73. — SOLD AS KIT

A. *CALIPER SEAL KITS*

An essential kit which is not available from any OEM Harley® parts catalog. Each kit contains the necessary seal and dust boots.

90-212 For XL 1974 thru 1977 and FX 1974 thru 1977 front caliper single disc. OEM 44277-74 & 44278-74. SOLD AS KIT

90-213 For XL 1978 thru 1983 and FX 1977 thru 1983 front caliper dual disc. OEM 44151-77 & 44153-77.

90-214 For FX 1973 thru 1980 rear and FL 1972 thru 1980 (except FLT) front & rear calipers single disc. OEM 44127-72A & 44133-72.

90-238 For FX 1981 & 1982 rear single piston caliper and FL 1980 thru 1984 front & rear single piston caliper. OEM 44007-80 & 44133-72.

90-331 For FL, FLHT & FLT, 1980 thru 1985 with dual piston rear brake caliper. Includes one (1) each of OEM 43945-79 & 43947-79. **NOTE:** Two (2) kits required per caliper.

90-216 For XL, FX & FLT, 1984 thru 1999, front caliper Includes one (1) each of OEM 44022-83 & 44047-83.

90-356 For XL late 1987 thru 1999, FXR & FXST, late 1987 & later, and FLT 1987 thru 1999, rear caliper. OEM 44045-87.

90-661 For all H-D® models 2000 & later four piston calipers, front or rear. OEM 44315-00.

90-729 O-Ring rebuild kit for 4 piston calipers. SOLD EACH

A


90-212


90-213


90-214


90-238


90-661


90-216

5

B. *BRAKE CALIPER PISTON ASSEMBLIES*

NOTE: SEALS SOLD SEPARATELY

90-220 Front FL 1972 thru early 1980. OEM 44109-72A. SOLD EACH

90-222 Front FX 1974 thru 1977 and Sportster® 1974 thru 1977. OEM 44275-74. SOLD EACH

90-438 Front FX & XL dual disc 1978 thru 1983. OEM 44157-77. Requires one piston for each caliper. SOLD EACH

90-660 Front or Rear all H-D® models 2000 & later. Includes four pistons and seals for one caliper. OEM 44313-00. SOLD AS KIT

90-219 Rear FL & FX, 1973 thru early 1980. OEM 44129-73. SOLD EACH

90-221 Rear FL late 1980, FX late 1980 thru 1982, and FXE 1983. OEM 44118-80. Also Front FL late 1980 thru 1984. SOLD EACH

90-330 Rear FL 1981 thru 1984 and FLT & FLHT 1980 thru 1985. OEM 43946-79. SOLD AS KIT

90-445 Rear Sportster® 1979 thru 1981. OEM 44181-77A. SOLD EACH

B


90-219



90-220


90-222


90-438


90-445

C. *BRAKE CALIPER SEALS & PISTONS FOR 2008-UP FLT*

90-217 Caliper seal set for '08 & Up FLT. SOLD AS SET

90-332 Caliper piston & seal set fort '08 & Up FLT. SOLD AS SET

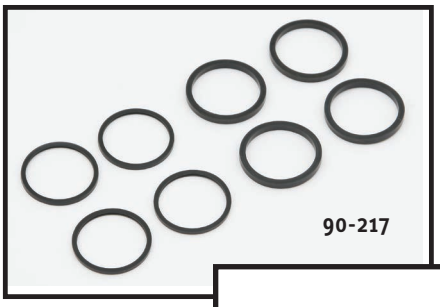
90-217

NEW!

C


90-332



90-250



90-251



90-252



90-253

A



90-254



90-255

CHROME PLATED



90-256



90-258

A. *CALIPER MOUNT HARDWARE*

All 1984 & later sets include mounting pin, mounting bolt with flat washer, back screw, & bleeder screw. All sets for Springer Softail® models also include drilled mounting bolt with clip. Polished.

FRONT CALIPER MOUNT HARDWARE

90-250 2000 & later, all H-D® except FLSTS & FXSTS. SOLD AS SET
90-251 1993 Thru 1999, all H-D® except Springers® (dual brakes order two sets).
90-252 1984 Thru 1992, all H-D® except Springers® (dual brakes order two sets).
90-253 1997 & Later FLSTS Springer Softail®.
90-254 1988 & Later FXSTS Springer Softail®.
90-255 1977 Thru 1983 XL & FX, dual disc.
90-256 1974 Thru 1977 XL & FX, single disc.

REAR CALIPER MOUNT HARDWARE

90-258 2000 & later, all H-D®. SOLD AS SET
90-259 1987 Thru 1999, all H-D®. Includes two guide pins (Torx®) and bleeder screw.
90-260 1982 Thru 1986 XL & FXR (bolts only).



90-259



90-260

B

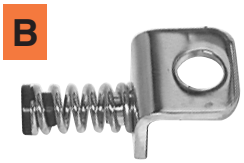
CHROME PLATED

B. *AXLE MOUNT CALIPER SUPPORT BRACKET*

Fits 74" or 80" H-D® with stock rear disc brake. 3/16" Thick bracket replaces your bent rear axle flat washer and puts even pressure on the swingarm to keep the right rear axle adjuster from jamming. 26 Pounds of spring pressure.

5-81 For 1980 and earlier. SOLD EACH

C


90-367


90-368

C. *REAR BRAKE BACKING PLATES FOR BIG TWIN*

Just what you've been looking for — our chrome plated rear brake backing plates for hydraulic rear brakes on all Big Twin models 1958 thru 1972. Because of the depressions & definitions of this part, the chrome plating may be inconsistent in some places. SOLD EACH

90-367 Fits Big Twin 1958 thru 1962. Replaces OEM 41650-58.
90-368 Fits Big Twin 1963 thru 1972. Replaces OEM 41650-63.

D


90-53


90-84

D. *BRAKE DRUMS FOR H-D®*

For H-D® 74" Big Twin. Complete with sprockets. Chrome plated except as noted.

90-53 For 1936 thru 1957. OEM 41401-37. SOLD EACH
90-90 For 1963 thru 1966. OEM 41400-63.
90-88 For 1967 thru 1972. OEM 41400-67.

For Sportster® 1954 thru 1978. Complete with sprockets. OEM 41401-52.

90-84 Black brake drum. SOLD EACH
90-85 Chrome plated brake drum.

HYDRAULIC BRAKE SYSTEM PARTS

ALL PARTS SOLD EACH EXCEPT AS NOTED

1	**90-199**	SWIVEL FITTING 1958 / 1962 **U.S.A. MADE** (OEM 41745-58)
	90-355	SWIVEL FITTING 1963 / 1973 (OEM 41750-63)
2	**90-200**	BOLT 1958 / 1972 **U.S.A. MADE** (OEM 41743-58)
3	**90-198**	COPPER GASKET BIG TWIN 1958 / 1972 (OEM 41744-58)
4	**90-126**	WHEEL CYLINDER 1958 / 1962. ACCEL (OEM 41740-58)
5	**90-64**	REBUILD KIT 1963 / 1972 (OEM 41748-63) SOLD AS KIT
6	**90-280**	BLEEDER SCREW **U.S.A. MADE** (OEM 41749-58)
7	**90-354**	REAR RETURN SPRING 1963 / 1972 (OEM 41836-63)
		BRAKE SHOES. SOLD AS SET
8	**90-92**	STANDARD BRAKE SHOES (OEM 44401-49, 49A, 49B) ALL MODELS SPORTSTER®: FRONT & REAR 1954 / 1963, REAR ONLY 1963 / 1978. ALSO BIG TWIN: FRONT ONLY 1949 / 1971
	90-183	STANDARD BRAKE SHOES (OEM 41805-38) BIG TWIN 1937 / 1957 WITH OLD STYLE MECHANICAL REAR BAKES AND FOR USE WITH OUR PART NO. **90-53** BRAKE DRUM
	90-86	BONDED BRAKE SHOES 15/16" WIDE (OEM 41801-58A) BIG TWIN 1958 / 1962 WITH HYDRAULIC REAR BRAKES AND FOR USE WITH OUR BRAKE DRUM
	90-89	BRAKE SHOES (OEM 41801-63) FL, FLH & FX 1963 / 1972 AND OR USE WITH OUR PART NO. **90-88** & **90-90** BRAKE DRUMS
		BRAKE LININGS & RIVETS. SOLD AS SET
9	**90-70**	BRAKE LININGS & RIVETS 1" X 9-1/2", 7 HOLE (OEM 44432-54) SPORTSTER® FRONT 1954/ 1963 AND REAR 1954 / 1978, ALL FL & FLH FRONT 1954 / 1971, SERVI-CAR FRONT 1958 / 1972
	90-100	BRAKE LININGS & RIVETS 1-1/2" X 7-1/4", 6 HOLE (OEM 41848-64) SPORTSTER® FRONT 1964/ 1972, SUPER GLIDE® FRONT 1971 & 1972
	90-163	BRAKE LININGS & RIVETS 1-1/2" X 7-1/4", 6 HOLE (OEM 41848-38) FL & FLH REAR MECHANICAL BRAKES 1937/ 1957
	90-106	BRAKE LININGS & RIVETS 1-1/2" X 8-1/2", 8 HOLE (OEM 41808-63) H-D® 74" REAR 1963/ 1972

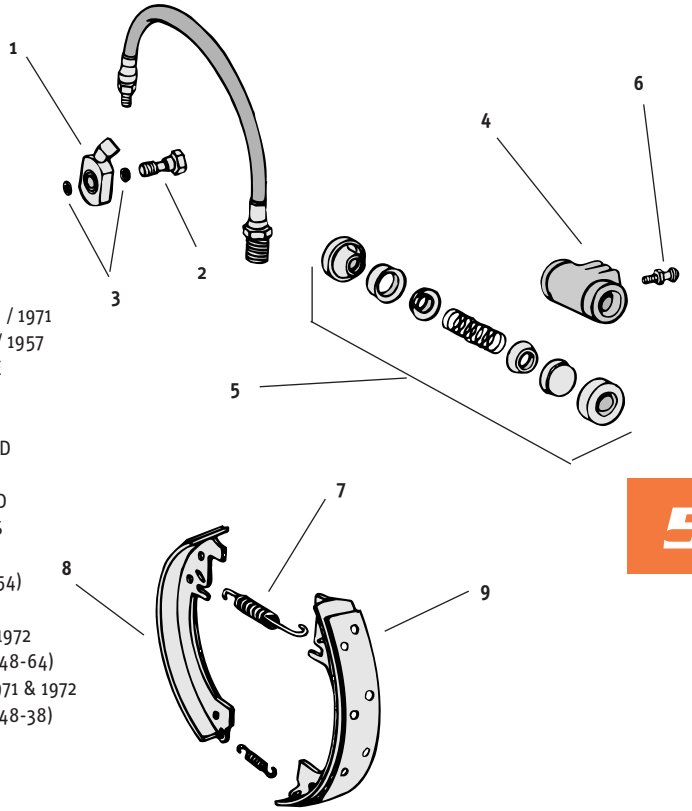

5

REAR MECHANICAL BRAKE & PARTS FOR H-D® 61", 74" & 80" TWINS 1936 THRU 1957

ALL PARTS SOLD EACH EXCEPT AS NOTED NOTE: MECHANICAL BRAKE PARTS ARE FOUND IN SECTION 4

1	**33-24**	CHROME LUG BOLT (OEM 43530-35) USE FIVE
2	**32-126**	BACKING PLATE SLEEVE **U.S.A. MADE** (OEM 41600-36)
3	—	PIVOT STUD & CUPS WITH NUT, WASHER & PIN (OEM 41875-38) SOLD AS SET
4	**90-182**	BRAKE SPRINGS (OEM 41835-30) SOLD AS PAIR
5	—	CHROME BACKING PLATE. PAUGHCO (OEM 41650-37)
7	**90-180**	BRAKE CAM (OEM 41671-37)
		BRAKE LININGS & RIVETS. SOLD AS SET
8	**90-70**	BRAKE LININGS & RIVETS 1" X 9-1/2", 7 HOLE (OEM 44432-54) SPORTSTER® FRONT 1954 / 1963 AND REAR 1954 / 1978, ALL FL & FLH FRONT 1954 / 1971, SERVI-CAR FRONT 1958 / 1972
	90-100	BRAKE LININGS & RIVETS 1-1/2" X 7-1/4", 6 HOLE (OEM 41848-64) SPORTSTER® FRONT 1964/ 1972, SUPER GLIDE® FRONT 1971 & 1972
	90-163	BRAKE LININGS & RIVETS 1-1/2" X 7-1/4", 6 HOLE (OEM 41848-38) FL & FLH REAR MECHANICAL BRAKES 1937/ 1957
	90-106	BRAKE LININGS & RIVETS 1-1/2" X 8-1/2", 8 HOLE (OEM 41808-63) H-D® 74" REAR 1963/ 1972

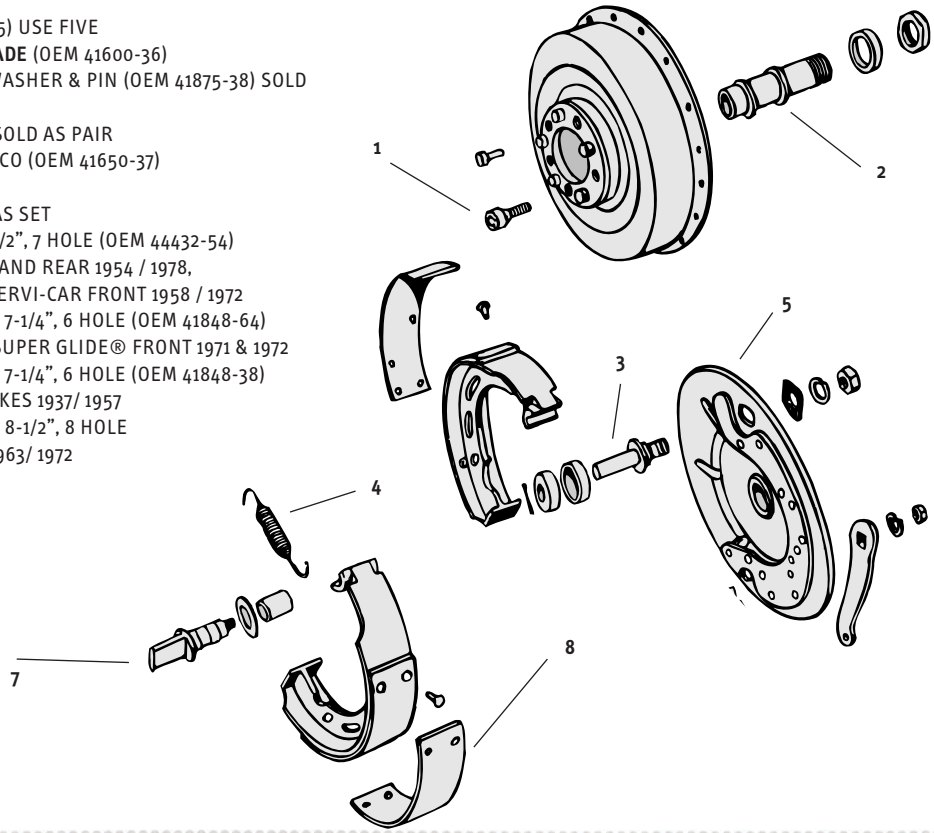

DISC BRAKE PARTS

ALL PARTS SOLD EACH EXCEPT AS NOTED

1	**95-235**	.315" WIDE OIL SEAL FL & FLH 1972 / 1999 (OEM 47519-72)
2	**33-24**	3/8-20 SOCKET HEAD LUG BOLT FL & FLH 1936 / 1972. CHROME (OEM 43530-35A) USE FIVE
3	**90-244**	DISC TO HUB ROTOR SPACER PLATE FX & XL FRONT 1973, FX REAR 1973 / 1980, FL FRONT & REAR 1973 / 1983 **U.S.A. MADE** (OEM 41814-76A)
4	**90-246**	3/8-16 X 1" FLAT SCREW (OEM 43567-79)
5	**66-76**	3/8" I.D. HOSE CLAMP **U.S.A. MADE** (OEM 38712-68)
6	**90-129**	LONG STEEL BUSHING FL, FLH, FLH-80, CLASSIC 1976 / 1980 **U.S.A. MADE** (OEM 45821-75)
7	**83-10**	CHROME ANCHOR STRAP (OEM 44154-73)
8	**90-300**	CALIPER MOUNTING PIN **U.S.A. MADE** (OEM 44107-72)
9		COMPLETE CALIPER ASSEMBLY
	90-281	CHROME CALIPER ASSY. FL REAR 1973 / 1980, FL FRONT 1972 / 1983, FX REAR 1973 / 1980 (OEM 44001-78B) **NOTE:** BRAKE PADS MUST BE PURCHASED SEPARATELY
	90-291	BLACK CALIPER ASSY. FL REAR 1973 / 1980, FL FRONT 1972 / 1983, FX REAR 1973 / 1980 (OEM 44001-78B) **NOTE:** BRAKE PADS MUST BE PURCHASED SEPARATELY
	90-439	CHROME CALIPER ASSY. 1980 / 1983 (OEM 44101-81) **NOTE:** BRAKE PADS MUST BE PURCHASED SEPARATELY
	90-408	BLACK CALIPER ASSY. 1980 / 1983 (OEM 44101-81) **NOTE:** BRAKE PADS MUST BE PURCHASED SEPARATELY
10	**90-128**	BRAKE PAD PIN FL & FLH, FLH-80 & CLASSIC 1972 / EARLY 1980 **U.S.A. MADE** (OEM 44124-72) USE TWO
11	**90-130**	SHORT STEEL BUSHING FL, FLH, FLH-80 & CLASSIC 1976 / EARLY 1980 **U.S.A. MADE** (OEM 45822-75)
12	**90-231**	CHROME "BOOMERANG" CALIPER MOUNT BRACKET FL, FLH, FLH-80 & CLASSIC 1973 / 1980 (OEM 44166-73)
13		CALIPER PISTON ASSEMBLY. SOLD AS KIT
	90-220	FRONT FL 1972 / EARLY 1980 (OEM 44109-72A)
	90-222	FRONT FX 1974 / 1977 & SPORTSTER® 1974 / 1977 (OEM 44275-74)
	90-438	FRONT FX & XL DUAL DISC 1978 / 1983 (OEM 44157-77) REQUIRES ONE PISTON FOR EACH CALIPER
	90-660	FRONT OR REAR ALL H-D® MODELS 2000 & LATER. INCLUDES FOUR PISTONS AND SEALS FOR ONE CALIPER (OEM 44313-00)
	90-219	REAR FL & FX, 1973 / EARLY 1980 (OEM 44129-73)
	90-221	REAR FL LATE 1980, FX LATE 1980 / 1982, & FXE 1983 ALSO FRONT FL LATE 1980 / 1984 (OEM 44118-80)
	90-330	REAR FL 1981 / 1984 & FLT & FLHT 1980 / 1985 (OEM 43946-79)
	90-445	REAR SPORTSTER® 1979 / 1981 (OEM 44181-77A)
14		CALIPER SEAL KIT: AN ESSENTIAL KIT WHICH IS NOT AVAILABLE FROM ANY OEM HARLEY® PARTS CATALOG. EACH KIT CONTAINS THE NECESSARY SEAL AND DUST BOOTS. SOLD AS KIT
	90-212	FRONT CALIPER SINGLE DISC XL 1974 / 1977, FX 1974 / 1977 (OEM 44277-74 & 44278-74)
	90-213	FRONT CALIPER DUAL DISC XL 1978 / 1983, FX 1977 / 1983 (OEM 44151-77 & 44153-77)
	90-214	SINGLE DISC FX 1973 / 1980 REAR, FL 1972 / 1980 (EXCEPT FLT) FRONT & REAR (OEM 44127-72A & 44133-72)
	90-238	FX 1981 & 1982 REAR SINGLE PISTON CALIPER, FL 1980 / 1984 FRONT & REAR SINGLE PISTON CALIPER (OEM 44007-80 & 44133-72)
	90-331	FL, FLHT & FLT, 1980 / 1985 WITH DUAL PISTON REAR BRAKE CALIPER. INCLUDES ONE EACH OF OEM 43945-79 & 43947-79. **NOTE:** TWO KITS REQUIRED PER CALIPER.
	90-216	XL, FX & FLT 1984 / 1999 FRONT CALIPER. INCLUDES ONE EACH OF OEM 44022-83 & 44047-83
	90-356	XL LATE 1987 / 1999, FXR & FXST LATE 1987 & LATER, FLT 1987 / 1999 REAR CALIPER (OEM 44045-87)
	90-661	ALL H-D® MODELS 2000 & LATER FOUR PISTON CALIPERS, FRONT OR REAR (OEM 44315-00)
15	**90-280**	BLEEDER VALVE FOR FRONT & REAR 1973 / 1977. ACCEL (OEM 41749-58)

A

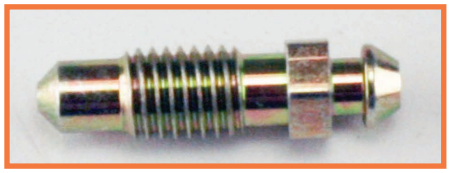

A. *BLEEDER SCREW*

These Accel bleeder screws are precision machined and are a must if the original bleeders become rusted or their hex portion becomes rounded during service making it impossible to loosen or tighten properly.

90-280 Bleeder screws fit above cylinders, also all disc brake calipers on FL 1972 thru 1979 and XL 1973 thru 1977. SOLD EACH

DISC BRAKE PARTS

ALL PARTS SOLD EACH EXCEPT AS NOTED

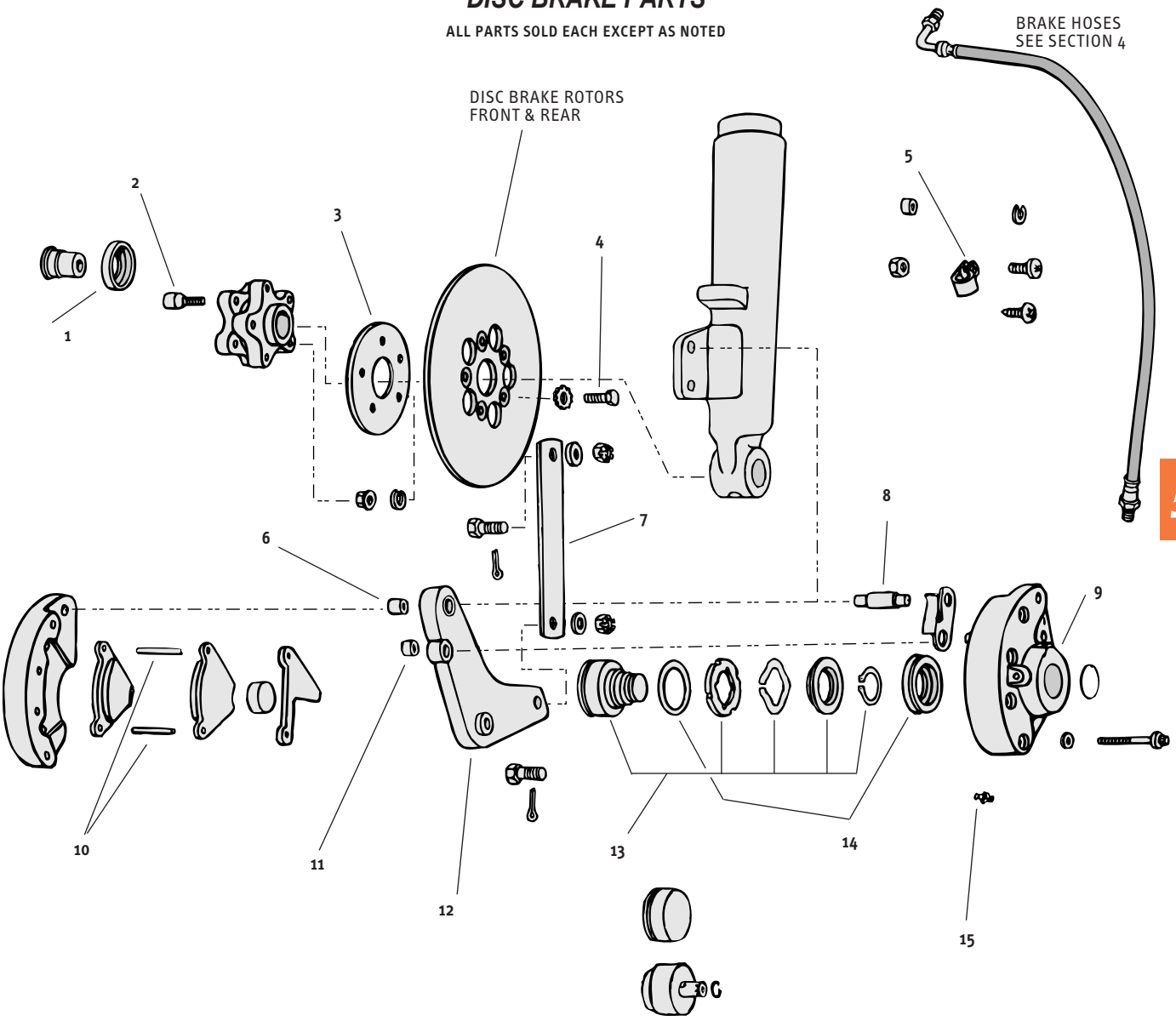

A. *BRAKE SHOES*



90-92 Fits Sportster® (all models): Front & rear 1954 thru 1963, Rear only 1963 thru 1978. Fits Big Twin: Front only 1949 thru 1971. Standard. OEM 44401-49, 49A, 49B. SOLD AS SET

90-183 Fits Big Twin 1937 thru 1957 with old style mechanical Rear brakes and for use with our part No. **90-53** brake drum. Standard. OEM 41805-38. SOLD AS SET

90-86 Fits Big Twin 1958 thru 1962 with hydraulic rear brakes or for use with brake drum (15/16" wide). Bonded. OEM 41801-58A. SOLD AS SET

90-89 Fits 1963 thru 1972 FL, FLH, FX, or for use with our part No. **90-88** and **90-90** brake drums. OEM 41801-63. SOLD AS SET

B. *BRAKE LININGS WITH RIVETS* SOLD AS SET

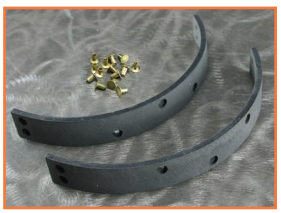

90-70 Fits Sportster® 1954 thru 1963, Front and 1954 thru 1978, Rear. Fits all FL & FLH, 1954 thru 1971, and Servi-Car 1958 thru 1972, Front. 1" x 9-1/2," 7 Hole. OEM 44432-54.

90-100 Fits Sportster® 1964 thru 1972, Front, and Super Glide® 1971 & 1972 Front. 1-1/2" x 7-1/4", 6 Hole. OEM 41848-64.

90-163 Fits all FL & FLH, 1937 thru 1957, mechanical brakes, Rear. 1-1/2" x 7-1/4", 6 Hole. OEM 41848-38.

90-106 Fits all H-D® 74" 1963 thru 1972, Rear. 1-1/2" x 8-1/2", 8 Hole. OEM 41808-63.

ULTIMA® BRAKE PADS

Ultima® Brake Pads are a line of high quality pads available in two different material compositions. The sintered material pads offer a high friction level with superior heat transfer for increased fade free stopping power. The kevlar pads offer a smooth responsive feel that is gentler for polished or chrome rotors.



Fits XL and FX models 1974-1977. Front single disc (comes w/rivets). OEM 44281-74.
90-10 Sintered brake pad set.
90-11 Kevlar brake pad set.

Fits FL rear 1972-1980, FX rear 1972-1983, FL front 1973-1984, and FX/XL front 1973. OEM 44005-78 & 44135-74.
90-12 Sintered brake pad set.
90-13 Kevlar brake pad set.



Fits XL, FX and FXR 1977-1983 front dual disc. OEM 44098-77.
90-14 Sintered brake pad set.
90-15 Kevlar brake pad set.



Fits XL rear 1977-1981 & FLT front 1980-1983. OEM 44099-77.
90-17 Sintered brake pad set.
90-18 Kevlar brake pad set.



Fits FL, FLT, FLHT 1980-1985 rear. OEM 43957-80.
90-20 Sintered brake pad set.
90-22 Kevlar brake pad set.

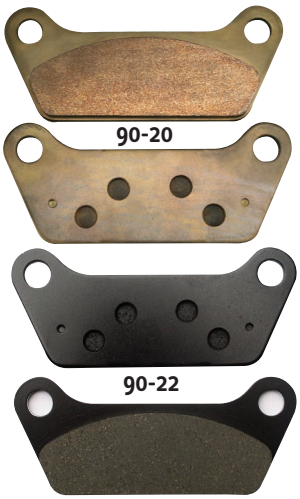

Fits all models 1984-1999 front w/either single or dual disc. All Springer m odels 1988-2007 front. OEM 44063-83.
90-23 Sintered brake pad set.
90-24 Kevlar brake pad set.



Fits all models 1982-1987 rear (except FLT/FLHT). OEM 44209-82.
90-25 Sintered brake pad set.
90-26 Kevlar brake pad set.



Fits all models 1987-1999 rear (except FLHS/FLT/FLHT). OEM 44209-87A & 44213-87.
90-27 Sintered brake pad set.
90-28 Kevlar brake pad set.



ULTIMA® BRAKE PADS

Ultima® Brake Pads are a line of high quality pads available in two different material compositions. The sintered material pads offer a high friction level with superior heat transfer for increased fade free stopping power. The kevlar pads offer a smooth responsive feel that is gentler for polished or chrome rotors.

Fits FLT/FLHS/FLHT 1986-1999 rear. OEM 43957-86C.
90-29 Sintered brake pad set.
90-30 Kevlar brake pad set.





Fits Softail® models 2000-2007 front or rear (except rear on 2006-Present FXST, FXSTB, FXSTS, FLSTFSE, 2007-present FLSTF & FLSTC).
Fits Dyna® & FLH/FLT 2000-2007 front or rear.
Fits XL 2000-2003 front or rear.
Fits V-Rod 2002-2005 front or rear
OEM 44082-00
90-31 Sintered brake pad set.
90-32 Kevlar brake pad set.





Fits Softail® models 2006-2007 FXST, FXSTB, FXSTS, FLSTFSE rear and 2007 FLSTF, FLSTC rear. OEM 46721-06.
90-33 Sintered brake pad set.
90-34 Kevlar brake pad set.





Fits XL 2004-present front. OEM 42831-04.
90-36 Sintered brake pad set.
90-38 Kevlar brake pad set.





Fits XL 2004-present rear. OEM 42836-04.
90-39 Sintered brake pad set.
90-41 Kevlar brake pad set.





Fits Softail® 2008-2014 front, & Dyna® 2008-2017 OEM 44082-08.
90-42 Sintered brake pad set.
90-43 Kevlar brake pad set.

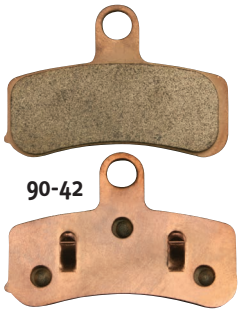



Fits Softail® & Dyna® 2008-2017 rear.
OEM 42298-08.
90-44 Sintered brake pad set.
90-48 Kevlar brake pad set.

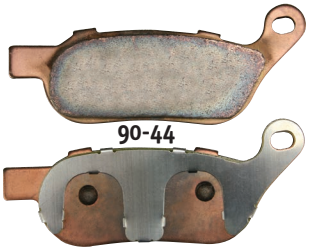



Fits Softail® & Dyna® 2018-up rear.
90-49 Sintered brake pad set.
90-52 Kevlar brake pad set.

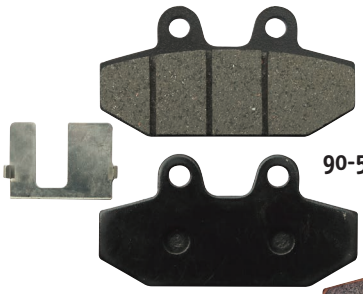



4

SOFTAIL® '18-UP EXTENDED REACH FORWARD CONTROL ABS KIT

NEW!



These extended reach kits relocate the rider foot controls a full 3" further forward for a more comfortable riding position for taller riders to stretchout in the saddle. Easy to install. Fits: 2018 up FLSB / FXFBS Softail® models equipped with ABS. (not compatible with engine guards) Installation of kit requires a extended brake line fitted (not included) Sold as kit.

47-92 Chrome extension reach forward control kit ABS 2018 up Softails®.

FORWARD CONTROL REPLACEMENT PARTS

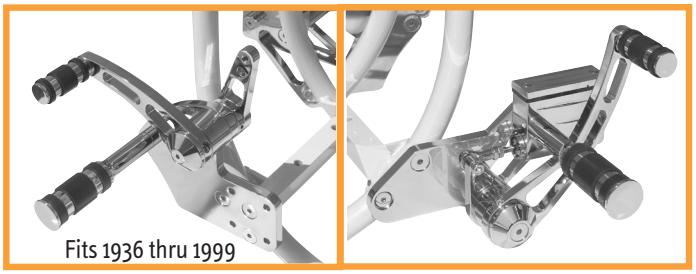

Fits 1936 thru 1999



22-193

22-194

22-9 Replacement rubber, brake & shifter pegs KIT (3 PCS)

22-193 Matching rear pegs. Chrome plated. Use with part No. **23-140** or **23-100** footpeg supports. SOLD AS PAIR

22-194 Matching rear pegs, spring loaded, flip-up style. Chrome plated. 3/8" Mounting hole. SOLD AS PAIR

22-195 Matching rear pegs, spring loaded, flip-up style. Chrome plated. 1/2" Mounting hole. SOLD AS PAIR

90-959 Master cylinder repair kit for 3/4" bore. SOLD EACHH

A. ADJUSTABLE PASSENGER FOOT PEG MOUNT KIT

These new adjustable foot peg kits maximize your passengers riding comfort. Allows you to raise & lower the passenger foot peg to accommodate taller or shorter riders. Easy to adjust through a 360 degree range (depending on model) , allowing both fore and aft & up and down height adjustment. Includes left & right adjustable assembly and all required mounting hardware. (foot pegs are sold separately)

22-101 Adjustable passenger foot peg mount kit. SOLD AS PAIR

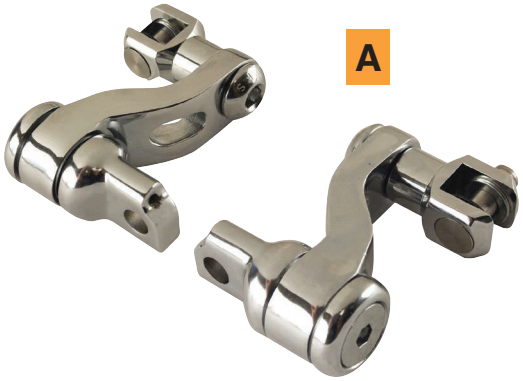

A

C. REAR FOOTREST BRACKET SET

Can be used for rear footrest brackets on Big Twin 1971 thru 1984. Direct replacement for FX 1971 thru 1981. Sold as set.

23-134 Right and left brackets. Replaces OEM 47116-77 and 47117-77.

C

CHROME PLATED

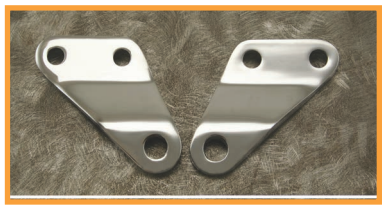

D. FOOTPEG SUPPORTS

U.S.A. MADE zinc plated bullet style footpeg supports. Sold each.

22-123 3/8"-24 Stud. Fits FL models 1965 thru thru 1984 and FX models 1971 thru 1985. OEM 50973-65.

22-124 1/2"-20 Stud. Fits FL models 1941 thru 1964 and FX models 1971 & 1972. OEM 52683-74.

D



22-123

ZINC PLATED



22-124

See previous page for description of EBC brake pads.

EBC BRAKE PADS FOR H-D® - CONTINUED

MODEL	YEAR	FRONT PART NO.	REAR PART NO.	OEM NO.
Dyna® Series		**90-721**[2]	**90-721**[2]	44082-00
FXD Super Glide® 1450,	2000/2001			
FXDX Super Glide® Sport 1450,	2000/2001			
FXDL Low Rider 1450,	2000/2001			
FXDWG Wide Glide® 1450,	2000/2001			
FXDS-CON Dyna® Convertible 1450,	2000/2001			
FXDXT Super Glide® T-Sport.	2001			
Softail® Series		**90-721**[2]	**90-721**[2]	44082-00
FXST Softail® Standard,	2000/2001			
FXSTB Night Train,	2000/2001			
FXSTDI/FXSTD Softail® Duece™,	2000/2001			
FLSTF/FLSTI Fat Boy®,	2000/2001			
FLSTC/FLSTCI Heritage® Classic.	2000/2001			
FXSTS Softail® Springer®,	2000,	**90-719**		44063-83A, B, C
FLSTS Heritage® Springer®.	2000		**90-721**[2]	44082-00
Touring Series		**90-721**[2]	**90-721**[2]	44082-00
FLHR/ FLHRI Road King® 1450,	2000/2001			
FLHRCI Road King® Classic 1450,	2000/2001			
FLHT Electra Glide® Standard 1450,	2000/2001			
FLTR/FLTRI Road Glide® 1450,	2000/2001			
FLHTCUI Electra Glide® Ultra Classic 1450.	2000/2001			
FLH, FLT, FLHT, FLHR, FLTR, Sintered	2008/later	**90-769**	**90-769**	41852-08
FLH, FLT, FLHT, FLHR, FLTR, Organic	2008/later	**90-752**	**90-752**	41852-08
VRODS, Sintered	2006/later	**90-769**	**90-769**	
VRODS, Organic	2006/later	**90-752**	**90-752**	
XL, XLH, XLCH, XLS, XLX.	1973/1977	**90-711**		44281-74
	1979/1983 Twin fronts	**90-714**		44032-77, -79
	1979/1981		**90-715**	43395-80
	1982/E. 1987 Girling caliper		**90-717**	44209-82, A
	1984/1999	**90-719**		44063-83A, B, C
	L. 1987/1999		**90-703**	44209-87B, C 44213-87
XLH Sportster® 883,	2000/2001	**90-721**[2]	**90-721**[2]	44082-00
XLH Sportster® 883 “Flat Track”,	2000,			
XL Sportster® 883 Hugger®,	2000/2001			
XL Sportster® 53c Custom,	2000/2001			
XL Sportster® 1200cc Custom,	2000/2001			
XL Sportster® 1200cc Sport.	2000/2001			
Buell.	1994/1997	**90-705**[3]		42386-84Y
			90-710	42385-94Y
Buell (except Blast).	1998/2000	**90-742**[3]		42386-98



90-721

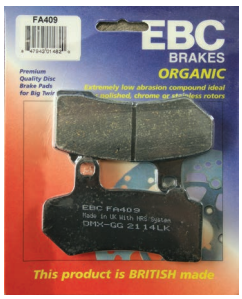

90-752

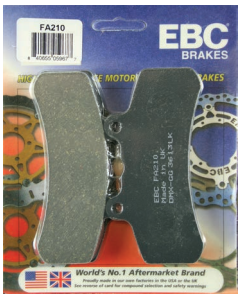

90-711

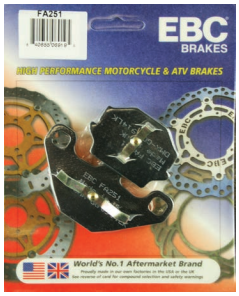

90-714



90-715

NOTE 1: Two sets required.

NOTE 2: HH Version part No. **90-722** also available.

NOTE 3: Green painted pads are Hi-Kevlar® sport bike or race-use compound applied to designs that are used **ONLY** on sport bikes.

5



90-712

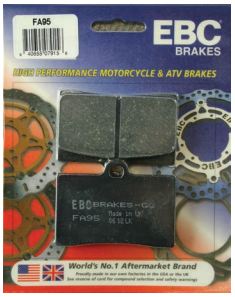

90-720

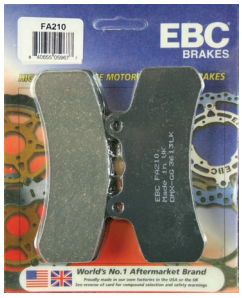

90-705



90-742

EBC BRAKE PADS FOR CUSTOM CALIPERS

EBC brake pads are recommended for use with aftermarket, polished and Chrome Horse® rotors to provide excellent stopping power without galling the rotor. **Black:** Black painted pads are Kevlar® formula for street bikes and cruisers. SOLD AS PAIR

MODEL	PART NO.	CALIPER REFERENCE
Performance Machine 2 piston.	**90-712**	#0056-1600
Performance Machine.	**90-720**	#0052-1602
Performance Machine 4 piston (street).	**90-708**	
Performance Machine 6 piston.	**90-705**	#0053-1604
Performance Machine (race oversize).	**90-707**	
2 piston (large).	**90-713**	Model A
2 piston (small).	**90-716**	Model B
JayBrake 2 piston (large).	**90-716**	
Chrome Horse® II 4 piston.	**90-706**	#90-675
Chrome Horse® II 6 piston.	**90-742**	#90-702/1
Nova/Legends	**90-708**	
EBC 4 piston.	**90-707**	
Thunderheart.	**90-706**	
RevTech/Wilwood.	**90-720**	#59-110
Brembo 4 piston (single pin).	**90-720**	

A



B



90-659

C



D

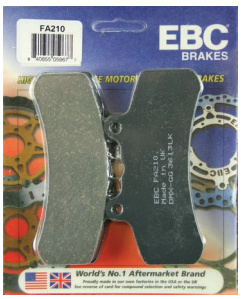

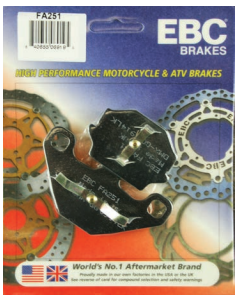

DISC BRAKE PAD QUICK REFERENCE — H-D® APPLICATIONS

ALL MEASUREMENTS GIVEN IN MILLIMETERS DISC BRAKE PADS SOLD AS PAIR

A. BRAKE PADS FOR TOURING MODELS 2008 & LATER

Fits FLH, FLT, FLHT, FLHR, FLTR, front & rear. Replaces OEM 41852-08.

★ **90-998** Midwest brake pads. NEW!
90-769 EBC brake pads, sintered.
90-752 EBC brake pads, organic. SOLD AS PAIR

B. BRAKE PADS FRONT & REAR FOR BIG TWIN 2000-2007 AND SPORTSTER® 2000 THRU 2003

Fits all H-D® front or rear except Springer® & Deuce®. Replaces OEM 44082-00. Dimensions: 92.9mm x 65.15mm x 7.5mm. SOLD AS PAIR

90-658 Midwest brake pads.
90-659 Midwest brake pads, metallic.
90-721 EBC brake pads (standard).
90-722 EBC brake pads (HH).

C. BRAKE PADS FRONT SPORTSTER® 2004 & LATER

Fits Sportster® front, right or left. Replaces OEM 42831-04.

90-963 Midwest brake pads.
90-964 Midwest brake pads, metallic. SOLD AS PAIR

D. BRAKE PADS REAR SPORTSTER® 2004 & LATER

Fits Sportster® rear. Replaces OEM 42836-04.

90-966 Midwest brake pads, metallic. SOLD AS PAIR

E. FRONT & REAR BRAKE PADS BUELL® 1994 THRU 1997

Fits Buell S2/S3 Thunderbolt, M2 Cyclone and S1 Lightning, 1994 thru 1997.

90-705 Front. EBC, Green/Hi-Kevlar®. SOLD AS PAIR
Replaces OEM 42386-84Y.
Dimensions: 112.1mm x 56.3mm x 10.9mm.
90-710 Rear. EBC, standard. Replaces OEM 42385-94Y.
Dimensions: 55.5mm x 37mm x 10mm and 85mm x 43mm x 8mm.

DISC BRAKE PAD QUICK REFERENCE — H-D® APPLICATIONS

ALL MEASUREMENTS GIVEN IN MILLIMETERS DISC BRAKE PADS SOLD AS PAIR

A. BRAKE PADS SINGLE DISC FRONT FOR 1974 THRU 1977

Fits all FX & Sportster® single disc front. Replaces OEM 44281-74. Dimensions: 78mm x 52.5mm x 6.3mm. Comes w/rivets.

90-711 EBC brake pads. SOLD AS PAIR

B. BRAKE PADS DUAL DISC FRONT FOR 1977 THRU 1983

Fits all FX, FXR & XL dual disc front. Replaces OEM 44032-77 & 44032-79. Dimensions: 69.5mm x 53.8mm x 6.5mm. SOLD AS PAIR

90-454 Midwest brake pads, metallic.
90-714 EBC brake pads.

C. BRAKE PADS FRONT & REAR FOR 1972 THRU 1984

Fits FL rear 1973 thru 1980, FL single disc front 1973 thru 1984, FX rear 1973 thru 1983 and FX & XL single disc front 1973. Replaces OEM 44135-74 & 44005-78. Dimensions: 113mm x 66.8mm x 7mm.

90-99 Midwest brake pads. SOLD AS PAIR
90-451 Midwest brake pads, metallic.
90-709 EBC brake pads.

D. BRAKE PADS DUAL DISC FRONT FOR FLT & FLHT 1980 THRU 1983 AND REAR XL 1977 THRU 1981

Fits all FLT & FLHT dual disc front, XL 1979 thru 1981 and XLCR 1977 thru 1978, rear. Replaces OEM 43395-80 & 44099-77. Dimensions: 89mm x 71.2mm x 6.5mm. SOLD AS PAIR

90-452 Midwest brake pads, metallic.
90-715 EBC brake pads.

E. BRAKE PADS REAR FOR FL 1980 THRU 1985

Fits rear FL, FLT & FLHT. Replaces OEM 43957-80. Dimensions: 174mm x 73.2mm x 9.3mm. SOLD AS PAIR

90-201 Midwest brake pads.
90-453 Midwest brake pads, metallic.
90-718 EBC brake pads.

F. BRAKE PADS REAR FOR 1982 THRU EARLY 1987

Fits rear Girling caliper on all H-D® 1982 thru early 1987. Replaces OEM 44209-82, A. Dimensions: 74.2mm x 49mm x 12mm. SOLD AS PAIR

90-455 Midwest brake pads, metallic.
90-717 EBC brake pads.

G. BRAKE PADS REAR FOR FL, FLHT & FLHS, 1986 THRU 1999

Fits rear Hayes caliper on all FLT, FLHT & FLHS. Replaces OEM 43957-86 A, B, D. Dimensions: 104mm x 62.4mm x 11.4mm. Between centers of ears: 86.20mm.

90-357 Midwest brake pads.
90-458 Midwest brake pads, metallic. SOLD AS PAIR
90-704 EBC brake pads.

H. BRAKE PADS REAR FOR LATE 1987 THRU 1999

Fits rear Hayes caliper on all Big Twin (except FLT, FLHT & FLHS), and Sportster®. Replaces OEM 44209-87B, C, & 44213-87. Dimensions: 104mm x 62.4mm x 11.2mm Between centers of ears: 86.20mm.

90-358 Midwest brake pads.
90-457 Midwest brake pads, metallic. SOLD AS PAIR
90-703 EBC brake pads.

A



B



C



D



5

E



F



G



I

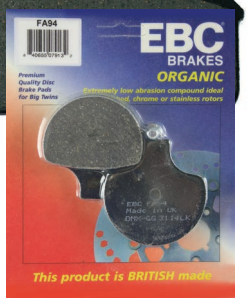

90-719

H



90-703

J



I. BRAKE PADS FRONT FOR 1984 THRU 1999

Fits all H-D® single or dual disc front and XR 1000 1983. Replaces OEM 43063-83 & 44063-83A, B, C. Dimensions: 60mm x 63mm x 13mm.

90-328 Midwest brake pads.
90-456 Midwest brake pads, metallic. SOLD AS PAIR
90-719 EBC brake pads.

J. BRAKE PADS FOR VRODS 2006 & LATER

Fits VRODS, front & rear. SOLD AS PAIR

90-769 EBC brake pads, sintered.
90-752 EBC brake pads, organic.

5

A

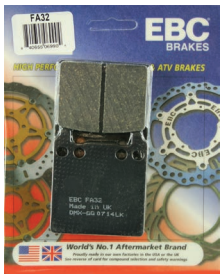

90-712

B

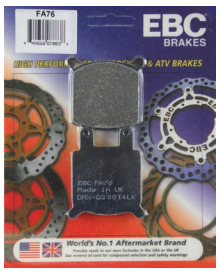

90-716

C

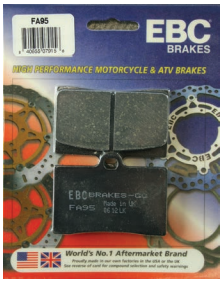

90-720

D



90-713

E

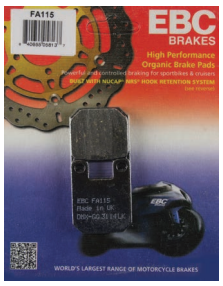

90-570

F



90-707

G

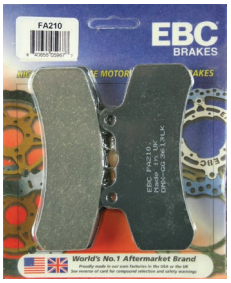

90-705

DISC BRAKE PAD QUICK REFERENCE — CUSTOM CALIPERS

ALL MEASUREMENTS GIVEN IN MILLIMETERSDISC BRAKE PADS SOLD AS PAIR

A. Fits Performance Machine caliper #0056-1600 (2 piston). Dimensions: 57.8mm x 65.3mm x 11mm.

90-712 EBC brake pads. SOLD AS PAIR

B. Fits GMA caliper Model B (small, 2 piston) and JayBrake (large, 2 piston). Dimensions: 49mm x 59mm x 6mm.

90-716 EBC brake pads. SOLD AS PAIR

C. Fits RevTech/Wilwood caliper #59-110 and Brembo (single pin, 4 piston). Dimensions: 69.2mm x 47mm x 8.2mm.

90-720 EBC brake pads. SOLD AS PAIR

D. Fits GMA caliper Model A (large, 2 piston). Dimensions: 57.6mm x 52.8mm x 9mm.

90-713 EBC brake pads. SOLD AS PAIR

E. Fits Chrome Horse® (2 or 4 piston), GMA caliper Model F (4 piston), JayBrake (small, 2 piston), Performance Machine #0052-1601 (small, 2 or 4 piston), and Iron Pegasus (small). Dimensions: 36mm x 45mm x 6mm.

90-570 EBC brake pads. SOLD AS PAIR

F.

90-706 EBC brake pads for Thunderheart and Chrome Horse® II. Dimensions: 68.4mm x 48.8mm x 8.3mm. SOLD AS PAIR

90-707 EBC brake pads for Performance Machine (race oversize) and EBC (4 piston). Dimensions: 69.4m x 48.8mm x 10.5mm.

90-708 EBC brake pads for Performance Machine (street, 4 piston) and Nova/Legends. Dimensions: 69.4mm x 48.8mm x 7.8mm.

G. Fits Performance Machine #0053-1604 & Buell front 94'-97'.

90-705 Brake pads. SOLD AS PAIR



ULTIMA WHEEL SPACER

ALUMINUM AXLE SPACERS

Ultima® Axle Spacers are made from billet aluminum & polished to a high luster. They are offered for 1" axles or 3/4" axles.

AXLE WHEEL SPACERS (PKG OF 2)
2x Each Per Box, 28 Pieces Total.

PART # 33-248
3/4" SPACERS
3/4" ID, 1-1/4" OD

PART#	WIDTH	PART#	WIDTH
33-250	1/4	33-257	1-1/8
33-251	3/8	33-258	1-1/4
33-252	1/2	33-259	1-3/8
33-253	5/8	33-260	1-1/2
33-254	3/4	33-261	1-3/4
33-255	7/8	33-262	2
33-256	1	33-263	3

PART # 33-249
1" SPACERS
1" ID, 1-1/2" OD

PART#	WIDTH	PART#	WIDTH
33-264	1/4	33-271	1-1/8
33-265	3/8	33-272	1-1/4
33-266	1/2	33-273	1-3/8
33-267	5/8	33-274	1-1/2
33-268	3/4	33-275	1-3/4
33-269	7/8	33-276	2
33-270	1	33-277	3

CHROME AXLE SPACERS

Due to cross usage of these spacers, we list them with the OEM number, dimensions and a picture for easy reference. All spacers are American made & high quality chrome plated. All spacers are .750 I.D. and 1.125 O.D. except where noted. Check picture and length before ordering.

AXLE SPACER PART NO.	REPLACES OEM NO.	LENGTH
33-1	43654-86A	.750
33-2	40910-84A	1.250
33-3	43358-83A	.375
33-4	41594-73	.650
33-5	41595-73	.830
33-6	41592-79	1.200
33-7	41595-86	1.230
33-8	41607-83	.500
33-9	41591-81	1.165
33-10	43648-86	1.266
33-11	43657-89	1.000

SOLD EACH

AXLE SPACER PART NO.	REPLACES OEM NO.	LENGTH
33-12	43617-95	.927
33-13	40915-94	1.245
33-14	43674-95	1.414
33-15	43683-97	1.340
33-16*	41591-90	1.430
33-17	40910-00	.887
33-18*	41595-00	1.880
33-19	43683-00	.986
33-20	43654-00	.470
33-21	43617-00	.515

SOLD EACH

*O.D. 1.25"

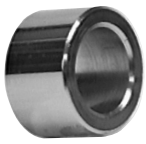
33-1


33-2


33-3


33-4

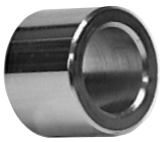
33-5


33-6


33-7


33-8


33-9


33-10


33-11


33-12


33-13


33-14


33-15


33-16

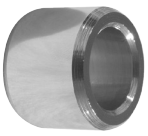
33-17


33-18


33-19


33-20


33-21

FRONT AND REAR AXLES & HARDWARE


32-281


32-284


32-285


32-282


32-283

Midwest now offers fine quality chrome plated axles for H-D®, available in kit form of axle & hardware, axle only, or hardware only. Order what you need! Hardware kits include spacers, nuts and washers as necessary.

HARDWARE & AXLE KIT PART NO.	AXLE ONLY PART NO.	HARDWARE ONLY PART NO.	REPLACES AXLE OEM NO.	APPLICATION
		FRONT AXLES & HARDWARE		
32-212	**32-34**	—	43872-36	For EL, FL & UL, 1936 thru 1948.
32-213	—	**32-199**	43875-48	For FL 1949 thru 1966.
32-214	**32-139**	**32-199**	43875-67	For FL 1967 thru 1971.
32-215	**32-186**	**32-200**	43875-73	For FL 4 speed 1973 thru 1980 and FXWG 1980 thru 1983.
32-216	**32-192**	**32-201**	43346-83	For FL 1981 thru 1984, FLT, FLHT & FLHS, 1983 thru 1997, FXST & FXSTC 1984 thru 1998, and FXWG 1984 thru 1986.
32-217	**32-133**	—	43871-52	For FX 1971 & 1972 and K Model & Sportster® 1952 thru 1972.
32-219	—	—	43883-77	For FX & FXR 1977 thru 1983, and Sportster® 1977 thru 1983. Dual disc brake.
32-220	**32-193**	—	43883-84	For FX & FXR 1984 thru 1987, and Sportster® 1984 thru 1987. With 35mm forks.
N/A	**32-237**	N/A	43895-87	For FXR 1988 thru 1994, and FXD 1991 & later. With 39mm forks.
N/A	**32-238**	N/A	41109-88	For FXSTS Springer® late 1988 & later.
N/A	**32-239**	N/A	41584-86A	For FLSTC & FLSTF, 1987 & later.
32-7	**32-6**	N/A	43354-00	For FXSTD (Duece®) 2000 & later.
32-281	N/A	N/A	43364-00	For FLT 2000 & later.
32-282	N/A	N/A	43758-04	For FXD 2004-2005
32-229	N/A	N/A	41545-07	For FLST 2007-up
32-242	N/A	N/A	41549-07	For FXSTD 2007-up
32-243	N/A	N/A	41547-07	For FXST 2007-up
N/A	**32-283**	N/A	41348-08	For FXWC 2008-up
N/A	**32-284**	N/A	41628-08	For FXD 2008-up
N/A	**32-285**	N/A	43895-08	For XL 2008-up
		REAR AXLES & HARDWARE		
32-221	**32-124**	**32-204**	41552-36	For EL, FL & UL, 1936 thru 1957.
32-222	—	**32-205**	41552-58A	For FL 1958 thru 1966.
32-223	—	**32-206**	41552-67	For FL 1967 thru 1972 and FX 1971 & 1972.
32-224	**32-109**	—	41552-73	For 4 speed FL & FX, 1973 thru 1985. With chain drive.
—	—	**32-208**	41580-79	For 4 speed FL & FX, 1980 thru 1986. With belt drive.
32-226	**32-104**	**32-209**	41551-52	For K Model & Sportster® 1952 thru 1978.
32-227	**32-196**	**32-210**	41563-77A	For Sportster® 1979 thru 1998.
32-228	**32-197**	**32-211**	41110-79	For FXR 1982 thru 1994 (except FXRT 1983 thru 1988), all models Softail® 1986 thru 1999, and FLT & FLHT, 1980 thru 1998.
N/A	**32-236**	N/A	41114-90	For Dyna® models 1991 & later.
32-8	**32-197**	N/A	41110-79	For Softail® 2000 & later.
32-286	**32-287**	N/A	41641-08	For FXST 2008-up
32-288	**32-289**	N/A	41114-08	For FXD 2008-up

AXLE & HARDWARE KITS SOLD AS KIT, AXLES SOLD EACH AND HARDWARE SOLD AS SET

SPACER & NUT KITS

FRONT AXLE

A. Includes chrome plated axle nut, machined washer, lockwasher and spacer (OEM 40910-84A/B). SOLD AS KIT

32-248 Kit fits Softail® FXST, FXSTC & FXDB 1984 thru 1996, Dynas®, FXWG 1984 thru 1994 and all FLT 1984 & later except FLHR & FLHRCI.

41-113 Kit fits FXST 2000 & later.

B. Includes chrome plated nylon insert locknut, machined washer, and spacer (OEM 40910-84A).

32-247 Kit fits FXSTS 1988 thru 1996. SOLD AS KIT

C. Includes chrome plated axle nut, machined washer, lockwasher and spacers (OEM 43657-89 & 43674-95).

32-249 Kit fits FLSTF 1996 thru 1999. SOLD AS KIT

REAR AXLE

D. Includes chrome plated slotted nut and spacers.

32-245 Kit fits Softail® 1984 thru 1999. Includes spacers to replace OEM 47577-86, 47577-94 & 41591-90. Grooved.

E. **41-123** Kit fits XL 2000. Replaces OEM 40910-00 & 43654-00. SOLD AS KIT

F. FRONT AXLE NUT & WASHER KIT

Chrome plated machined steel washer, hex nut & stainless steel lockwasher.

32-190 Fits FX & Sportster®, 1973 & later. SOLD AS KIT
32-170 Fits Wide Glide® 1972 & later.

G. FRONT AXLE CAP KIT

Chrome plated die cast axle cap kit. Fits FL 1973 thru 1984, FLT, FLHT, FLHS, 1980 thru 1999, Softail® models (except FXSTS) 1984 & later, FXWG 1980 thru 1986, Dyna Glide® 1991 & later, and Sportster® and FXR, 1987 & later. SOLD AS KIT

32-230 Axle cap kit. Small o.d. 1.18". Replaces OEM 43899-86. Also fits Twin Cam 88® "B" front motor mount bolts.

H. REAR AXLE NUT & LOCK KIT

Quality reproduction rear axle kit made to original H-D® specifications. Contains one each of the following: sleeve nut, sleeve collar, axle nut and axle nut lockwasher. SOLD AS KIT

32-119 Fits Big Twins 1930 thru 1972.

I. CENTER WHEEL SPACERS

Center wheel spacers for use with Ultima® King Spoke, Kool Kat®, Manhattan, solid billet & billet hub spoke wheels. Can also be cut to size for custom applications.

33-300 Spacer, wheel center, 1" x 4.846"
Fits all front wheels & 3.5" rear wheels.

33-301 Spacer, wheel center, 1" x 5.906"
Fits all 5.5" rear wheels.

33-302 Spacer, wheel center, 1" x 7.134"
Fits all 8.5" rear wheels.

33-303 Spacer, wheel center, 1" x 9.134"
Fits all 10.5" rear wheels.

33-304 Spacer, wheel center, 3/4" x 4.846"
Fits all front wheels & 3.5" rear wheels.

33-305 Spacer, wheel center, 3/4" x 5.906"
Fits all 5.5" rear wheels.

A
SOLD AS KIT



B



C



D



E



F



G



32-230 CHROME PLATED

COLONY

H



CHROME PLATED



I

NEW!

5

A

CHROME PLATED



B



CHROME PLATED

C



U.S.A. MADE COLONY

5

D



CHROME PLATEDLUG

CHROME PLATED

E



F



G



H



I



A. *AXLE NUT COVER KITS*

32-255 Front billet axle nut cover. Fits FLT 2000-2007. SOLD AS KIT

B. *REAR AXLE NUT & WASHER KIT*

Chrome plated heavy duty machined steel washers prevent distortion of square swing arms.

32-191 Fits Big Twin 1973 & later and Sportster® 1979 & later. SOLD AS KIT

C. *COLONY FRONT AXLE COVERS*

Fits 72' FL, 73'-84' 4 speed FL, 80'-up FL, FLHT, 80'-86' FXWG, 84'-up Softail® (except Springer), 88'-94' FXR, 91'-up Dyna® (except Wide Glide). Fits most 1/2-20 threaded axles.

40-735 Pike front axle covers SOLD AS KIT

D. *BRAKE DRUM WHEEL LUGs*

33-24 Wheel lugs (5 used) for 1936 thru 1972. OEM 43530-35. SOLD EACH

E. *TIRE VALVE STEM COVERS*

33-179 Flared. Fits metal or rubber stems. SOLD EACH
33-181 Bullet shaped. Screws on metal stem.

F. *BULLET VALVE STEM COVERS*

33-278 Chrome Bullet valve stem cover. SOLD AS PAIR

G. *REAR AXLE SPRING CLIP*

Chrome plated reproduction of latest OEM 510 spring clip.

41-124 Used on all 1991 & later FL, FX, and XL. SOLD AS PKG. OF 5

H. *WHEEL BEARING GREASE*

Lithium complex high temperature grease. Meets the requirements for disc and drum brakes. Good temperature stability. Protects against rust and oxidation. May also be used in general purpose applications.

103-300 1 lb. Container grease. SOLD EACH

I. *WHEEL SEALS*

95-196 Early wheel seal. OEM 47519-58. SOLD EACH
95-235 Late wheel seal .315" wide. OEM 47519-72.
95-370 Wheel seal for 1984 & later .410" wide. OEM 47519-83A.

A. *EZE BLEEDER*

Save time and money using the EZE Bleeder. Bleed air from the brake system by starting at the low points. Inject brake fluid into the caliper in its natural direction up to the the master cylinder. Instructions included.

97-208 EZE Bleeder. SOLD EACH

A



B. *REPLACEMENT VALVE STEMS FOR KING SPOKE® & ULTIMA® CNC WHEELS*

33-306* Straight Valve Stem for King Spoke® wheels. SOLD EACH
33-307* Angled Valve Stem for King Spoke® wheels. SOLD EACH

B



33-307

33-306



NEW!

KING SPOKE ULTIMA

C. *VALVE STEMS FOR TUBELESS WHEELS*

33-225 45° Chrome plated valve stem. Use on rims with .480" diameter valve hole. SOLD EACH
33-227 Straight chrome plated valve stem. Replaces OEM 43157-83A. Use with stock mags, Chrome Horse® billet wheels, Sturgis, and many other brands. Use on rims with .327/.339" diameter valve hole.

C

33-225



ALL PARTS CHROME PLATED

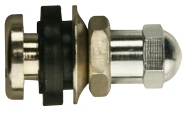

33-227

5

D. *REPLACEMENT INNER TUBES*

Excellent quality butyl rubber tubes at reasonable prices. These tubes are superior to natural rubber as butyl is non-porous and will retain air much longer.

2-19	500/510-16, rubber stem, side valve.	SOLD EACH
2-72	500/510-16, metal stem, side valve.	
2-73	500/510-16, metal stem, center valve.	
2-65	325/350-18, metal stem, center valve.	
2-66	350/400-18, metal stem, center valve.	
2-69	400/450/460/510-18, metal stem,center valve.	
2-56	325/350-19, metal stem, center valve.	
2-57	275/300-21, metal stem, center valve.	
2-58	300/325-23, metal stem, center valve.	
2-59	120/50-26, metal stem, center valve.	

D



2-19



2-72



2-73



2-66



2-69



2-56



2-57



2-58

D. *RUBBER RIM STRIPS*

2-23	For use with 16" rims (center valve).
2-24	For use with 16" rims (side valve).
2-25	For use with 18" rims (center valve).
2-26	For use with 19" rims (center valve).
2-28	For use with 19" rims (side valve).
2-27	For use with 21" rims (center valve).
2-29	For use with 26" rims (center valve).

D



2-25



2-59

A



95-802 95-909 95-910 95-911 95-912 95-913

B



5

C



D



E



F



A. *SEALED & ABS WHEEL BEARINGS*

Fits Front & Rear, all 2000 & later Big Twin & Sportster® models except FLT Front.

Part #	Description	I.D.	OEM HD®
95-802	Sealed	3/4"	9267
95-909	Sealed	1"	9247
95-910	Sealed Single Row	25mm	9276
95-911	Sealed Double Row	25mm	9276
95-912	ABS	25mm	9252
95-913	ABS 21" Wheel	25mm	

B. *WHEEL BEARINGS*

Shield on both sides - top quality.

95-176 I.D. 5/8", O.D. 40mm. 19/16". SOLD EACH
95-255 I.D. 5/8", O.D. 35mm. 13/8".

C. *TAPERED WHEEL BEARINGS*

95-446 TAPERED BEARING WITH RACE. TIMKEN 1973-1999 (OEM 9052) SOLD EACH

D. *WHEEL BEARING I.D. REDUCER*

Wheel bearing reducers are designed for use with 1" or 25mm bearing assemblies & 3/4 axles. Reduces bearing I.D. to 3/4". Thin lip feature elimates the need to change axle spacers. SOLD AS PAIR

33-295 Bearing I.D. reducer for custom use. 1"- 3/4"
33-296 Bearing I.D. reducer for custom use. 25mm - 3/4"

E. *WHEEL BEARING REMOVAL & INSTALLATION KIT*

Wheel bearing removal and install tool is a must for every shop. Removes and installs 3/4 25mm & 1" sealed bearing for 2000-later wheels.

97-290 Wheel bearing removal & install kit. SOLD AS KIT

F. *25mm BEARING CONVERSION KIT*

95-915 25mmBearing conversion kit. SOLD AS KIT

Complete Engines Performance Parts Rebuild Service



PARTS ON AND IN ENGINE EXCEPT ELECTRICAL, IGNITION

ULTIMA® COMPETITION SERIES ENGINES FOR TWIN CAM® REPLACEMENT

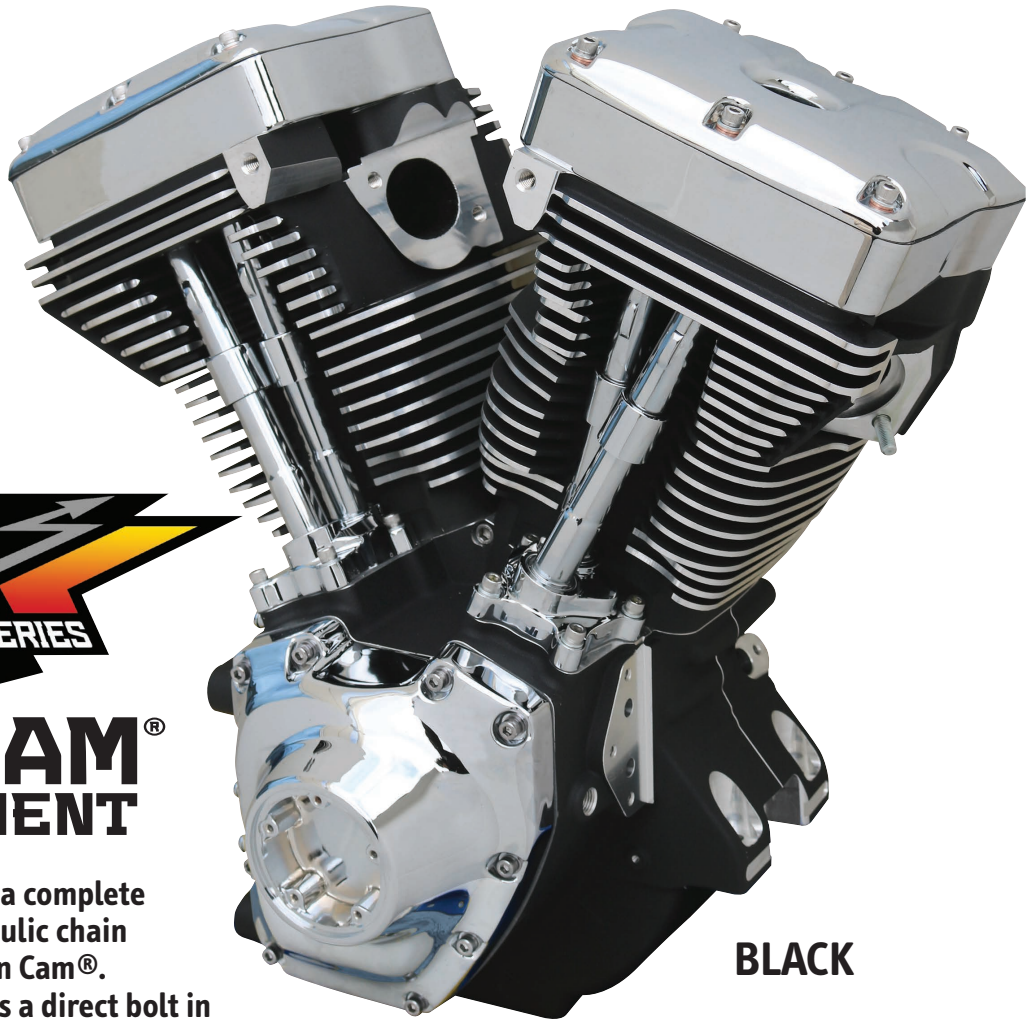

6

TWIN CAM® REPLACEMENT

Ultima® is now offering a complete competition series hydraulic chain tensioner engine for Twin Cam®. Our new 113" Twin Cam is a direct bolt in engine for 99-06 "A" motor Twin Cam bikes.

BLACK

Just like Ultima's® EVO® style engines this engine features high quality components at an affordable price. These cases utilize Timken sprocket shaft bearings. The crankshaft assembly is the same crank assemblies Ultima® has been building for years. Dynamically balanced and featuring forged H-beam rods makes for a rock solid foundation for these engines. Pistons are forged aluminum from Mahle Motorsports®. The heads feature conical valve springs, chromoly retainers, manganese bronze guides, compression releases and stainless steel valves.

Valve train components include an Andrews® 67H set of cams. Ultima's® 4140 steel adjustable pushrods and topped off with 4140 forged steel roller rockers. The cam chest components include a billet oil pump, billet cam support plate with late model hydraulic chain tensioners for peace of mind. Choices of finish include black, polished or silver. With plenty of power these engines make a great replacement for a tired stock motor or a custom build.

*NON EPA COMPLIANT

298-450 Ultima 113" Polished competiton series engine for Twin Cam® replacement.
298-451 Ultima 113" Silver finish competiton series engine for Twin Cam® replacement.
298-452 Ultima 113" Black competiton series engine for Twin Cam® replacement.
298-453 Ultima 113" **Blackout** competiton series engine for Twin Cam® replacement.

COMPETITION SERIES ULTIMA®

TWIN CAM® REPLACEMENT

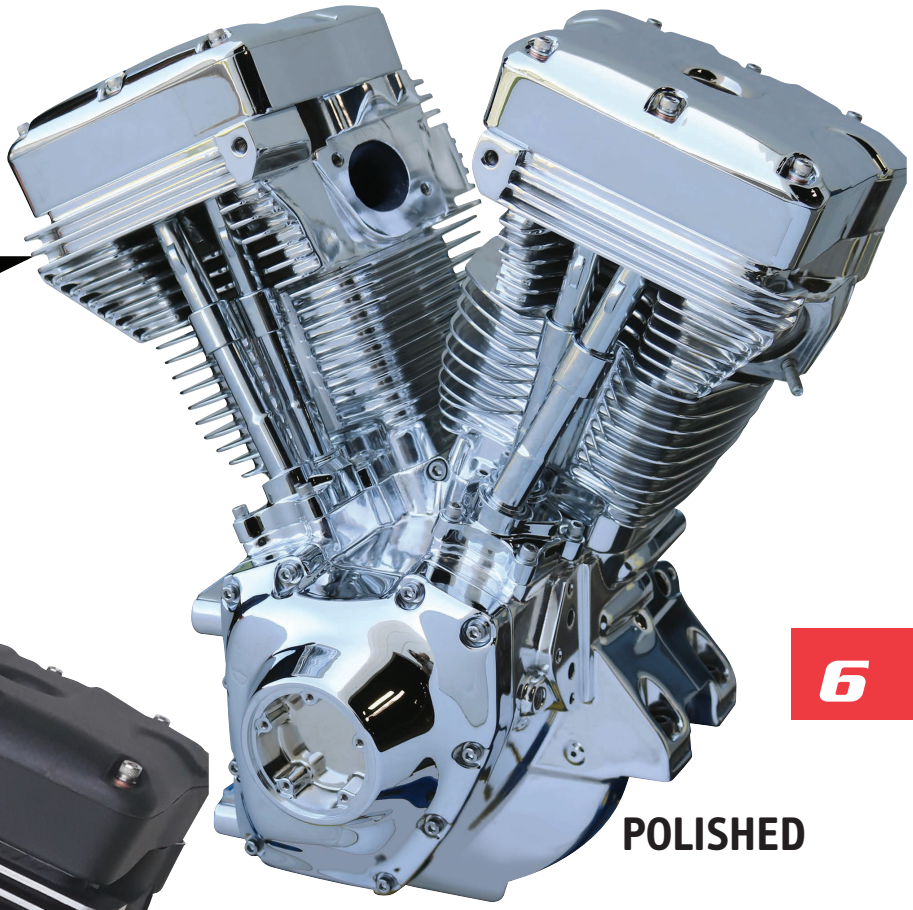

POLISHED



BLACKOUT



SILVER

Engine Specs on page 6/13

ULTIMA® COMPLETE COMPETITION SERIES ENGINES FOR EVOLUTION® REPLACEMENT

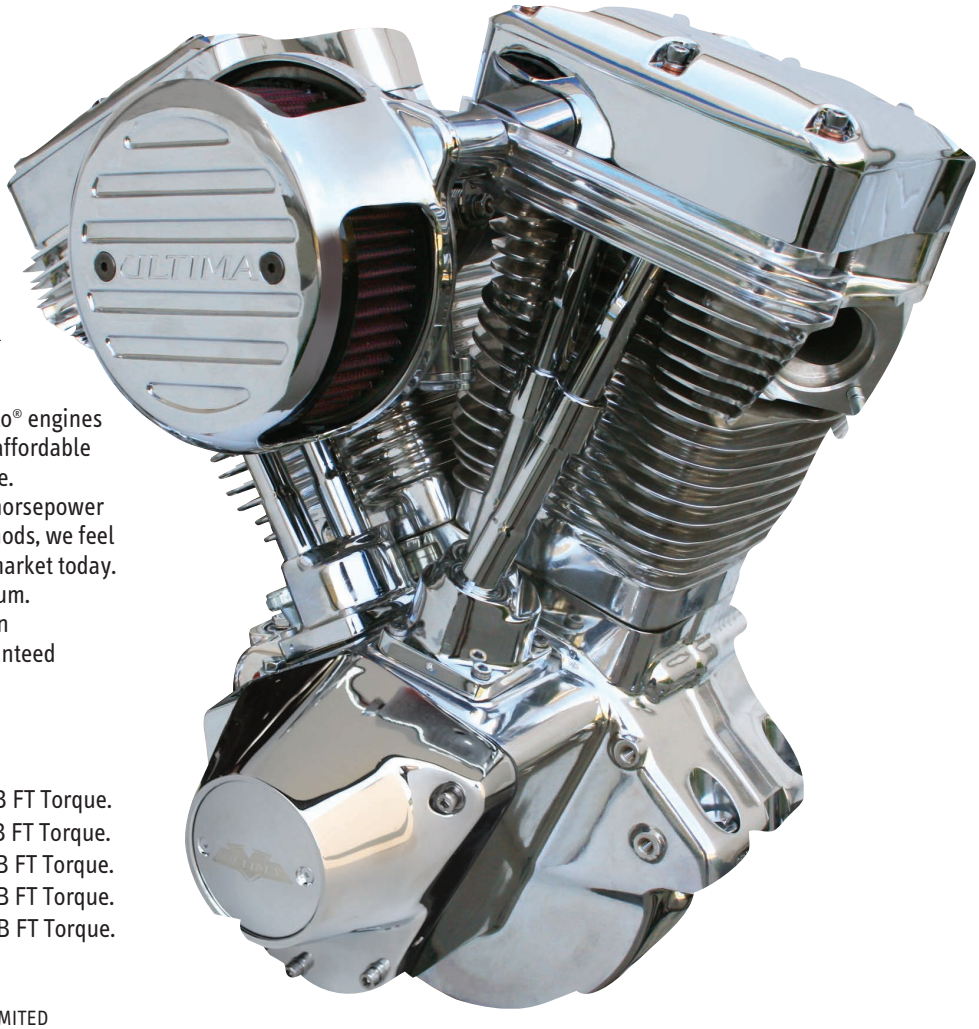

Emphasizing longevity, Ultima® El Bruto® engines combine high quality components with affordable prices giving you the best value available.
Our proven combinations deliver more horsepower and due to our exclusive balancing methods, we feel they are the smoothest engines on the market today.
All castings are made from C356 aluminum.
The engine components are machined on state of the art CNC equipment for guaranteed dimensional accuracy and repeatability.
Our customers agree these engines are the best value anywhere.

*Rated Output 107 C.I. **115 HP** with 120 LB FT Torque.
*Rated Output 113 C.I. **120 HP** with 120 LB FT Torque.
*Rated Output 120 C.I. **130 HP** with 135 LB FT Torque.
*Rated Output 127 C.I. **140 HP** with 140 LB FT Torque.
*Rated Output 140 C.I. **165 HP** with 170 LB FT Torque.
Rated Output Measured at Crankshaft.

113 C.I. C-SERIES ENGINES CARRY A 12 MONTH LIMITED WARRANTY FROM ORIGINAL DATE OF PURCHASE.

120 & 127 C.I. C-SERIES ENGINES CARRY A 6 MONTH LIMITED WARRANTY FROM ORIGINAL DATE OF PURCHASE.

For additional warranty details see C-SERIES owners manual (included with purchase and/or available online @ www.ultimaproducts.com).

*NOT EPA COMPLIANT

For specs on all displacements, see page 6/14 thru 6/17.

107 C.I.
113 C.I.
120 C.I.
127 C.I.
140 C.I.

107 CI

298-230	Complete Natural Finish
298-231	Complete Black Finish
298-232	Complete Polished Finish

113 CI

298-253	Complete Natural Finish
298-254	Complete Black Finish
298-255	Complete Polished Finish

120 CI

298-256	Complete Natural Finish
298-257	Complete Black Finish
298-258	Complete Polished Finish

127 CI

298-272	Complete Natural Finish
298-273	Complete Black Finish
298-274	Complete Polished Finish

140 CI

298-243	Complete Natural Finish
298-244	Complete Black Finish
298-245	Complete Polished Finish



BLACKOUT

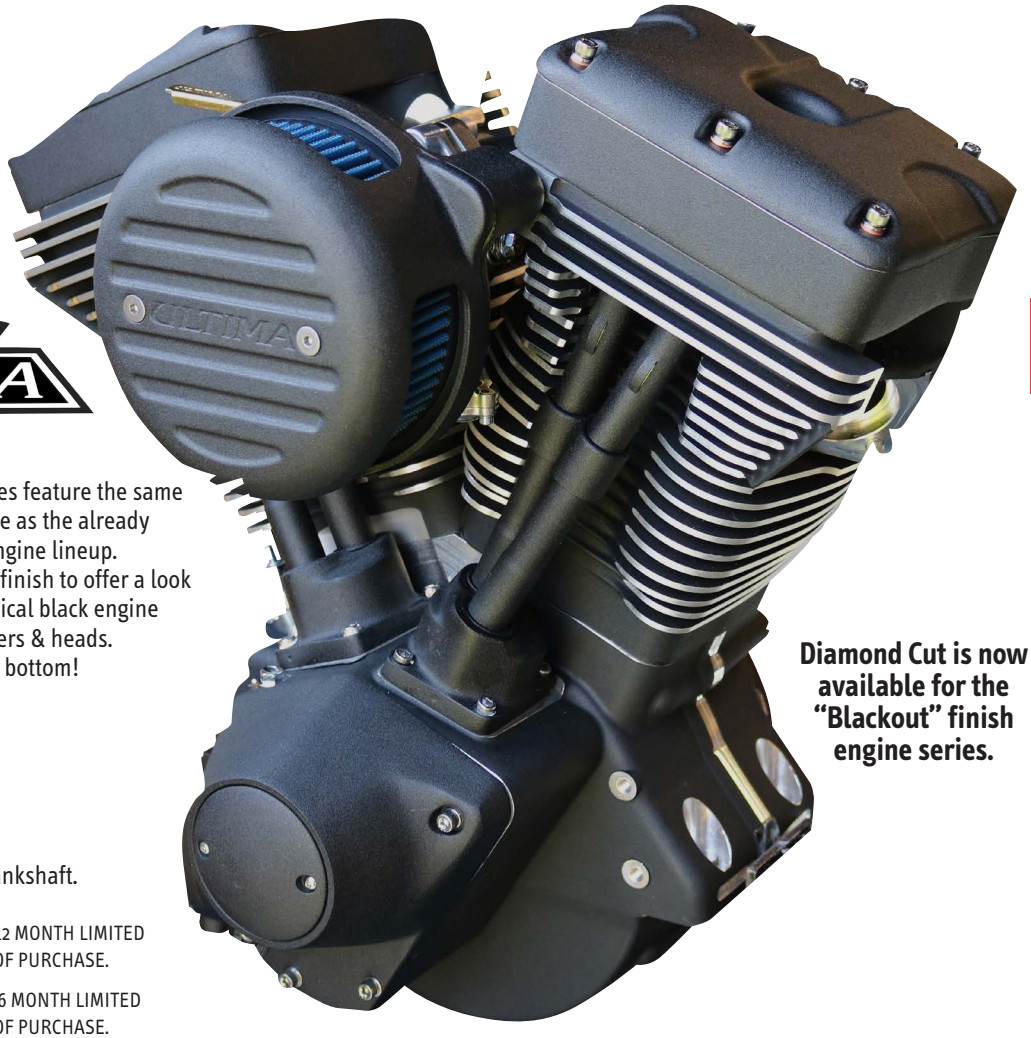

The Ultima® **Black Out** engines feature the same quality, value and performance as the already proven Ultima® El Bruto® engine lineup. Featuring a black powdercoat finish to offer a look that goes deep beyond the typical black engine finish on only the case, cylinders & heads. This beast is pitch black top to bottom!

Diamond Cut is now available for the "Blackout" finish engine series.

*Rated Output 113 C.I. 120 HP with 120 LB FT Torque.
*Rated Output 127 C.I. 140 HP with 140 LB FT Torque.
Rated Output Measured at Crankshaft.

113 C.I. C-SERIES ENGINES CARRY A 12 MONTH LIMITED WARRANTY FROM ORIGINAL DATE OF PURCHASE.

127 C.I. C-SERIES ENGINES CARRY A 6 MONTH LIMITED WARRANTY FROM ORIGINAL DATE OF PURCHASE.

For additional warranty details see C-SERIES owners manual (included with purchase and/or available online @ www.ultimaproducts.com).

For specs on all displacements, see page 6/13 thru 6/15.

*NOT EPA COMPLIANT

100 C.I.
107 C.I.
113 C.I.
120 C.I.
127 C.I.
140 C.I.

298-360	100 C.I. Complete Blackout Competition Series engine
298-361	107 C.I. Complete Blackout Competition Series engine
298-362	113 C.I. Complete Blackout Competition Series engine
298-363	120 C.I. Complete Blackout Competition Series engine
298-364	127 C.I. Complete Blackout Competition Series engine
298-366*	140 C.I. Complete Blackout Competition Series engine

ULTIMA® COMPLETE COMPETITION SERIES ENINES
DIAMOND CUT®

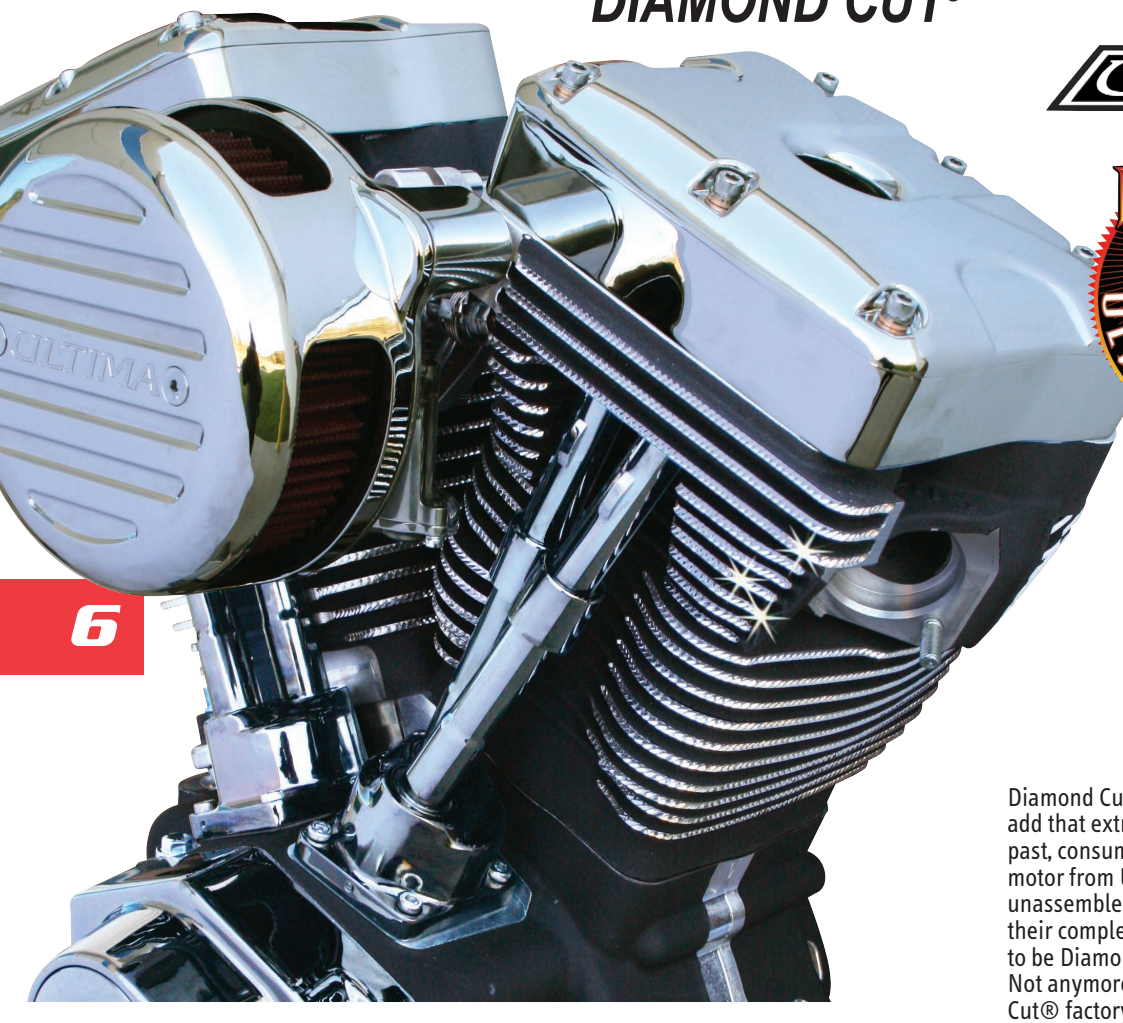

100 C.I.
107 C.I.
113 C.I.
120 C.I.
127 C.I.
140 C.I.

Diamond Cut® Ultima® motors are ready to add that extra shine to your motorcycle. In the past, consumers looking for a Diamond Cut® motor from Ultima® either had to buy an unassembled Ultima® motor or dis-assemble their complete motor before sending the parts to be Diamond Cut® & then re-assembling. Not anymore!!!! Now you can get a Diamond Cut® factory assembled Ultima® engine for very little additional cost. These Diamond Cut® engines are available in black, natural, polished and **now in the new "Blackout" finish** in displacements ranging from 100ci to 140 ci. We have proven that performance should not cost a lot so why should it be any different when choosing your finish?

100-113 C.I. C-SERIES ENGINES CARRY A 12 MONTH LIMITED WARRANTY FROM ORIGINAL DATE OF PURCHASE.

120-127 C.I. C-SERIES ENGINES CARRY A 6 MONTH LIMITED WARRANTY FROM ORIGINAL DATE OF PURCHASE.

For additional warranty details see C-SERIES owners manual (included with purchase and/or available online @ www.ultimaproducts.com).

*NOT EPA COMPLIANT

***Now available for the "Blackout" finish engine series.**

For specs on all displacements, see page 6/13 thru 6/15.

100 CI

296-250	Complete Natural Finish
296-251	Complete Black Finish
296-252	Complete Polished Finish

107 CI

296-230	Complete Natural Finish
296-231	Complete Black Finish
296-232	Complete Polished Finish

113 CI

296-253	Complete Natural Finish
296-254	Complete Black Finish
296-255	Complete Polished Finish
296-228*	Complete **BLACKOUT** Finish

120 CI

296-256	Complete Natural Finish
296-257	Complete Black Finish
296-258	Complete Polished Finish

127 CI

296-272	Complete Natural Finish
296-273	Complete Black Finish
296-274	Complete Polished Finish
296-229*	Complete **BLACKOUT** Finish

140 CI

296-243	Complete Natural Finish
296-244	Complete Black Finish
296-245	Complete Polished Finish

Ultima® is now offering all 113" and 127" Competition Series Engines for EFI.

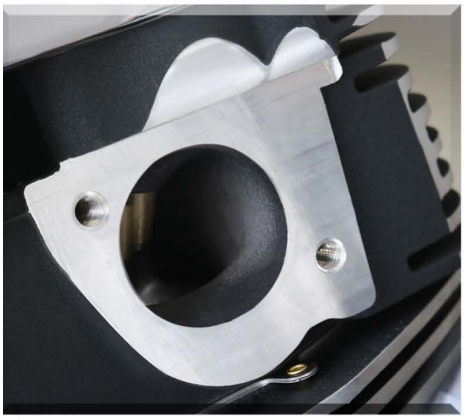

The heads are machined to fit OEM stock width manifolds.



The front head has the port machined for stock style temperature sensors.

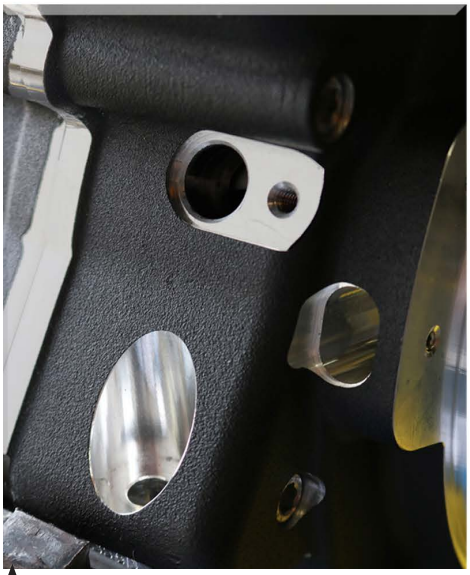

The case and crank have been machined to accept stock Delphi style crank position sensors.

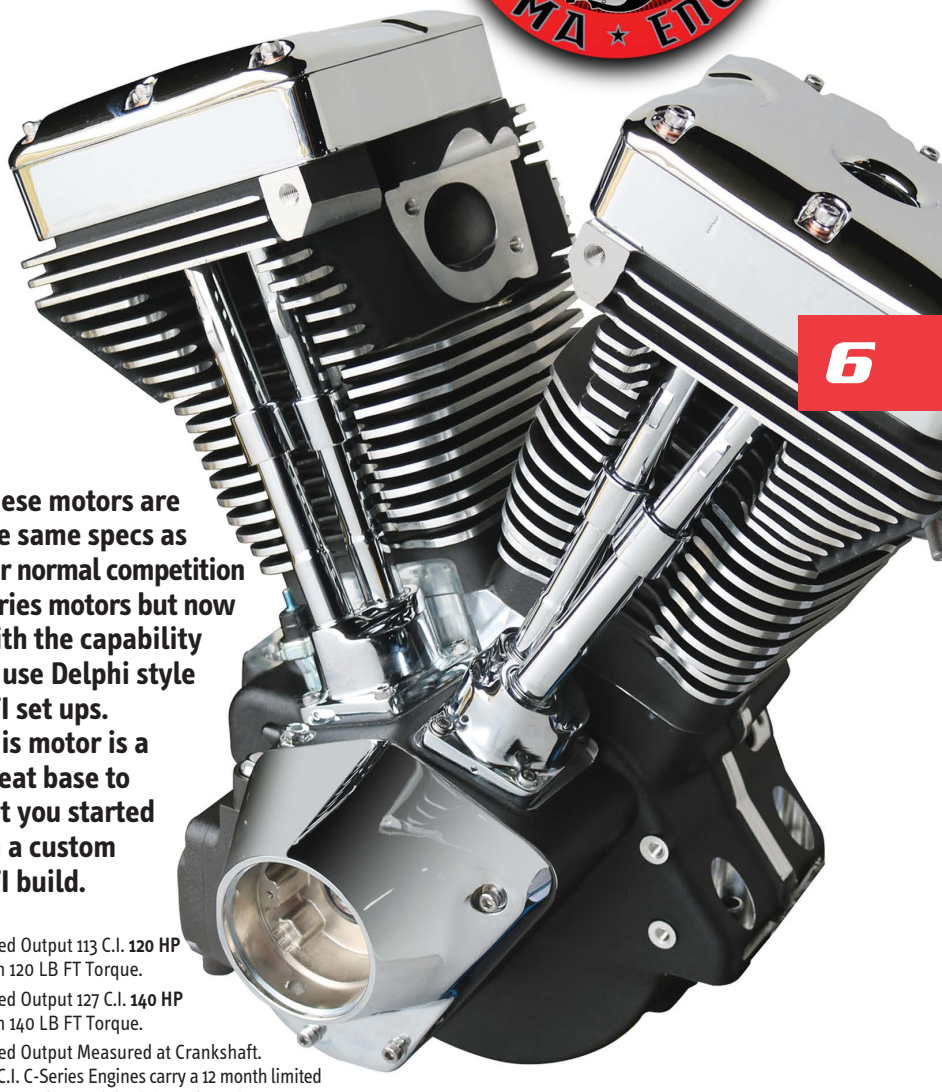

6

These motors are the same specs as our normal competition series motors but now with the capability to use Delphi style EFI set ups. This motor is a great base to get you started on a custom EFI build.

Rated Output 113 C.I. **120 HP** with 120 LB FT Torque.

Rated Output 127 C.I. **140 HP** with 140 LB FT Torque.

Rated Output Measured at Crankshaft. 113 C.I. C-Series Engines carry a 12 month limited warranty from original date of purchase.127 C.I. C-Series Engines carry a 6 month limited warranty from original date of purchase.

NOT EPA COMPLIANT

292-253	Natural 113 C.I. EFI Competition Series Engine
292-254	Blackl 113 C.I. EFI Competition Series Engine
292-255	Polished 113 C.I. EFI Competition Series Engine
292-272	Natural 127 C.I. EFI Competition Series Engine
292-273	Blackl 127 C.I. EFI Competition Series Engine
292-274	Polished 127 C.I. EFI Competition Series Engine

100 C.I. W/ Mild CAM & 2 YEAR WARRANTY

ULTIMA® COMPLETE COMPETITION SERIES ENGINES FOR EVOLUTION® REPLACEMENT

Ultima® has made a change to our line of competition series 100" motors. If you are in the need of a new motor and you don't need a monster, we have what you are looking for.
Our 100" motors are a great replacement for a tired stock motor but still have great performance. We went with a milder cam and lowered the compression. They start very easy making for less wear on your starter and battery. The milder cam makes for an extremely quiet motor.
Here is the biggest feature:
They will come with a **2 YEAR WARRANTY.**

100 CI	*Extended Warranty
298-250	Complete Natural Finish
298-251	Complete Black Finish
298-252	Complete Polished Finish

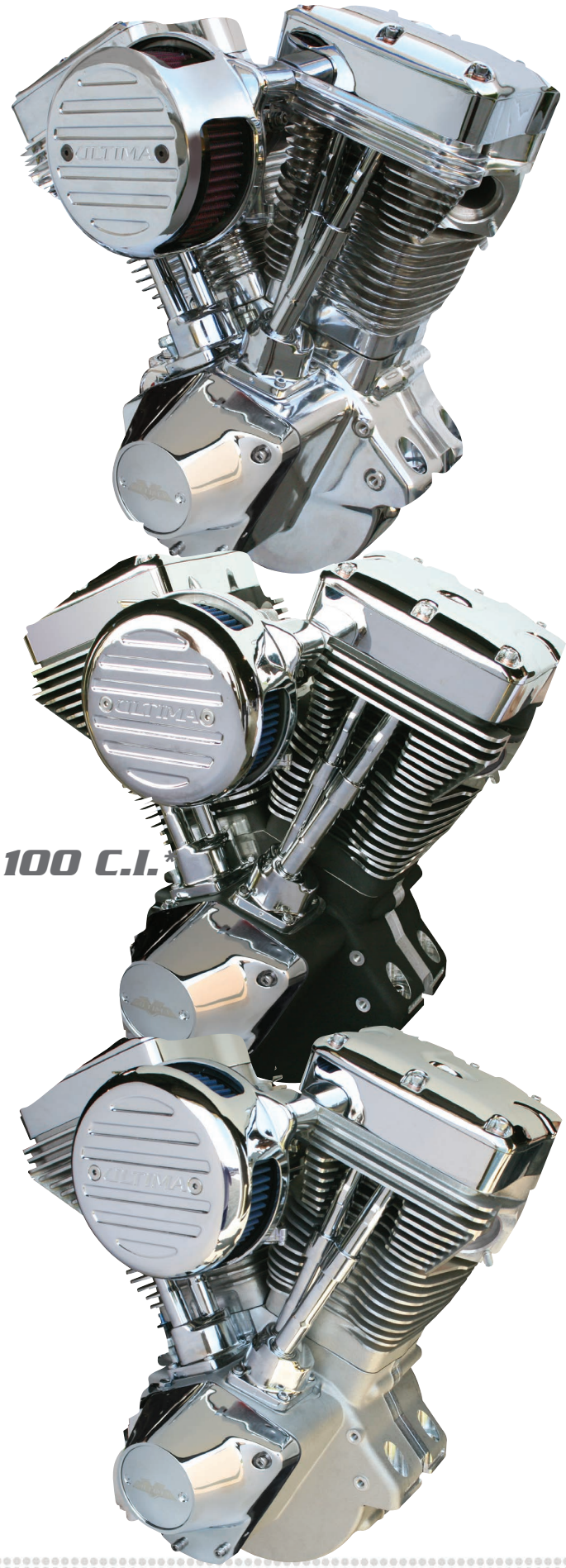

ULTIMA® SHOVELHEAD 96 C.I. ENGINES AVAILABLE IN 2 NEW FINISHES

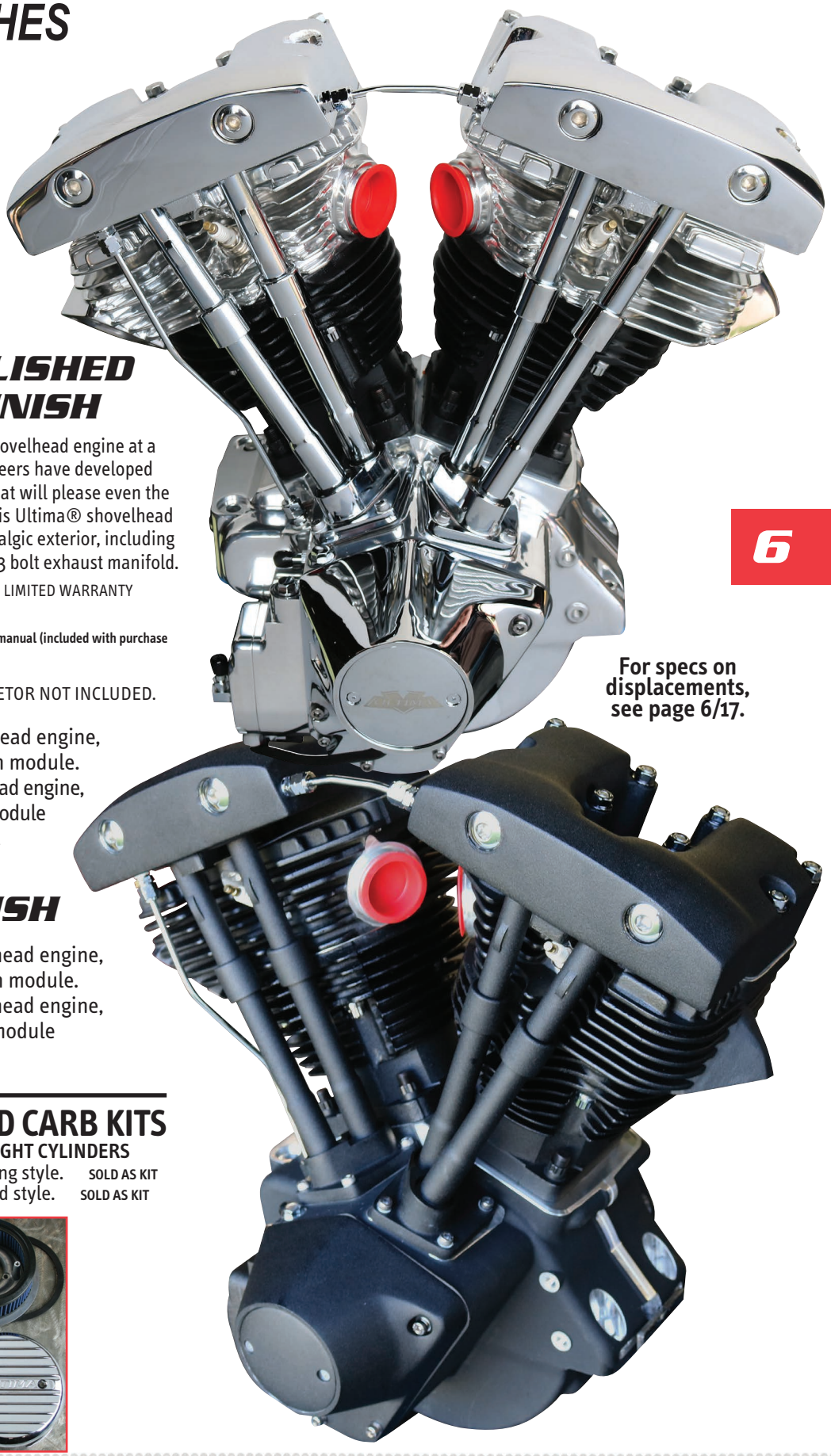

POLISHED FINISH

For those who are looking for a quality shovelhead engine at a realistic price, look no further! Our engineers have developed what we believe to be a superior motor that will please even the most die-hard shovelhead enthusiast. This Ultima® shovelhead motor offers modern technology in a nostalgic exterior, including dual plug heads, compression releases & 3 bolt exhaust manifold.

96 C.I. SHOVELHEAD ENGINE CARRIES A 6 MONTH LIMITED WARRANTY FROM ORIGINAL DATE OF PURCHASE.

For additional warranty details see SHOVELHEAD owners manual (included with purchase and/or available online @ www.ultimaproducts.com).

*NOT EPA COMPLIANT
*NOTE: INTAKE MANIFOLD AND CARBURETOR NOT INCLUDED.

298-212 Complete 96 C.I. Shovelhead engine, Polished finish & ignition module.

298-216* Complete 96 C.I. Shovelhead engine, Polished finish, ignition module & 3 Piece Crank Assembly.

6

For specs on displacements, see page 6/17.

BLACKOUT FINISH

298-213 Complete 96 C.I., Shovelhead engine, Blackout finish, & ignition module.

298-217* Complete 96 C.I., Shovelhead engine, Blackout finish, ignition module & 3 Piece Crank Assembly.

ULTIMA® SHOVELHEAD CARB KITS

SHOVELHEAD MOTORS W/STOCK HEIGHT CYLINDERS

42-127 Complete R2 carb kit. O-ring style. SOLD AS KIT
42-128 Complete R2 carb kit. Band style. SOLD AS KIT



ULTIMA® SHOVELHEAD ENGINES
TRADITIONAL & BLACK FINISHES

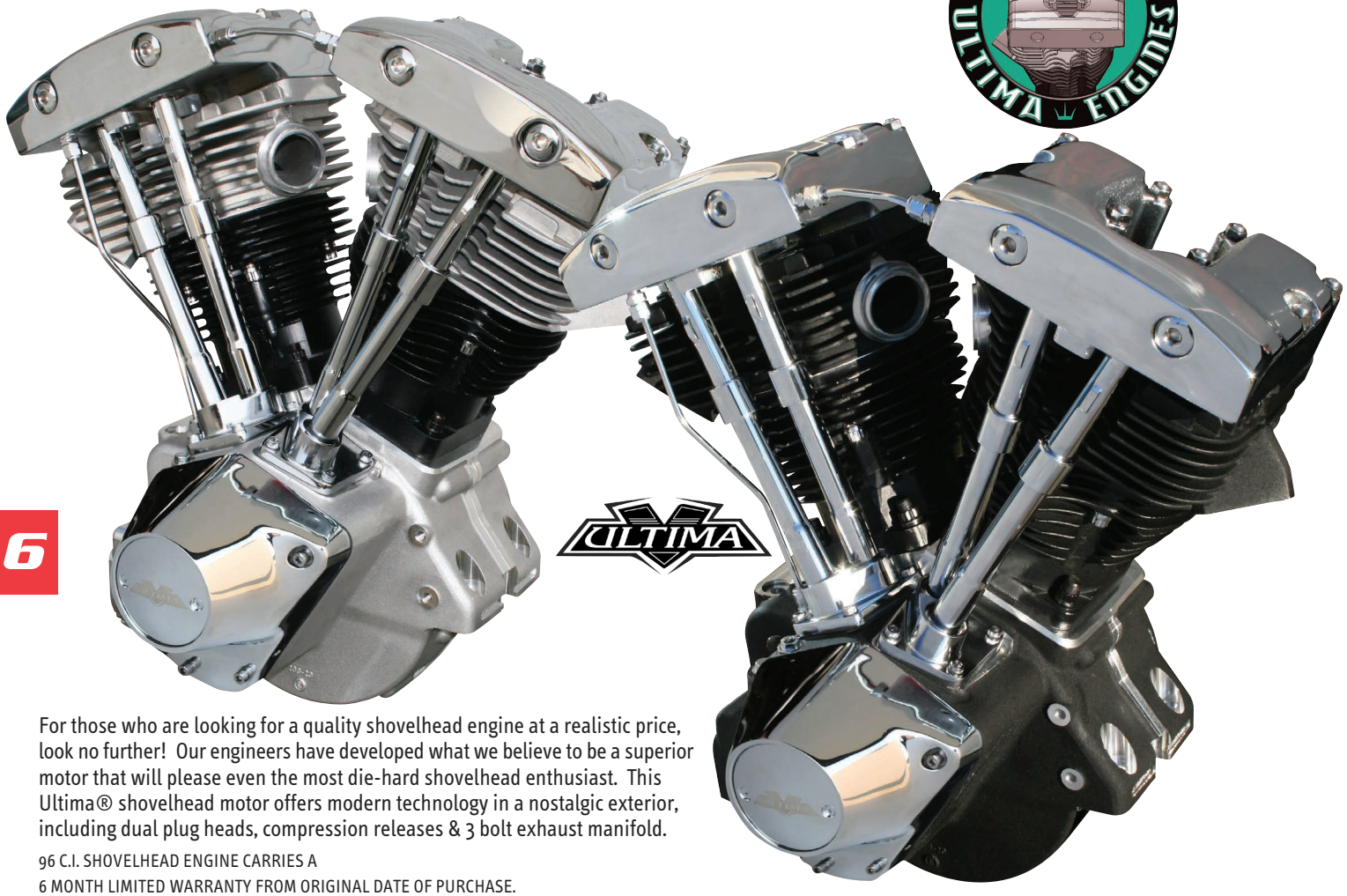

For those who are looking for a quality shovelhead engine at a realistic price, look no further! Our engineers have developed what we believe to be a superior motor that will please even the most die-hard shovelhead enthusiast. This Ultima® shovelhead motor offers modern technology in a nostalgic exterior, including dual plug heads, compression releases & 3 bolt exhaust manifold.

96 C.I. SHOVELHEAD ENGINE CARRIES A
6 MONTH LIMITED WARRANTY FROM ORIGINAL DATE OF PURCHASE.

For additional warranty details see SHOVELHEAD owners manual (included with purchase and/or available online @ www.ultimaproducts.com).

*NOT EPA COMPLIANT
*NOTE: INTAKE MANIFOLD AND CARBURETOR NOT INCLUDED.

For specs on displacements, see page 6/17.

96 C.I.

96 CI
298-210 Complete, Traditional finish, Shovelhead engine w/chrome accents & ignitionmodule.
298-214* Complete, Traditional finish, Shovelhead engine w/chrome accents, ignitionmodule & 3 Piece Crank Assembly.

96 CI
298-211 Complete, Black finish, Shovelhead engine w/chrome accents & ignition module.
298-215* Complete, Black finish, Shovelhead engine w/chrome accents, ignition module & 3 Piece Crank Assembly.



ULTIMA® SHOVELHEAD CARB KITS

SHOVELHEAD MOTORS W/STOCK HEIGHT CYLINDERS
42-127 Complete R2 carb kit. O-ring style. SOLD AS KIT
42-128 Complete R2 carb kit. Band style. SOLD AS KIT

NOTE: Ultima® carb kits not intended for street use.

ULTIMA® COMPLETE UNASSEMBLED COMPETITION SERIES ENGINES FOR EVO®

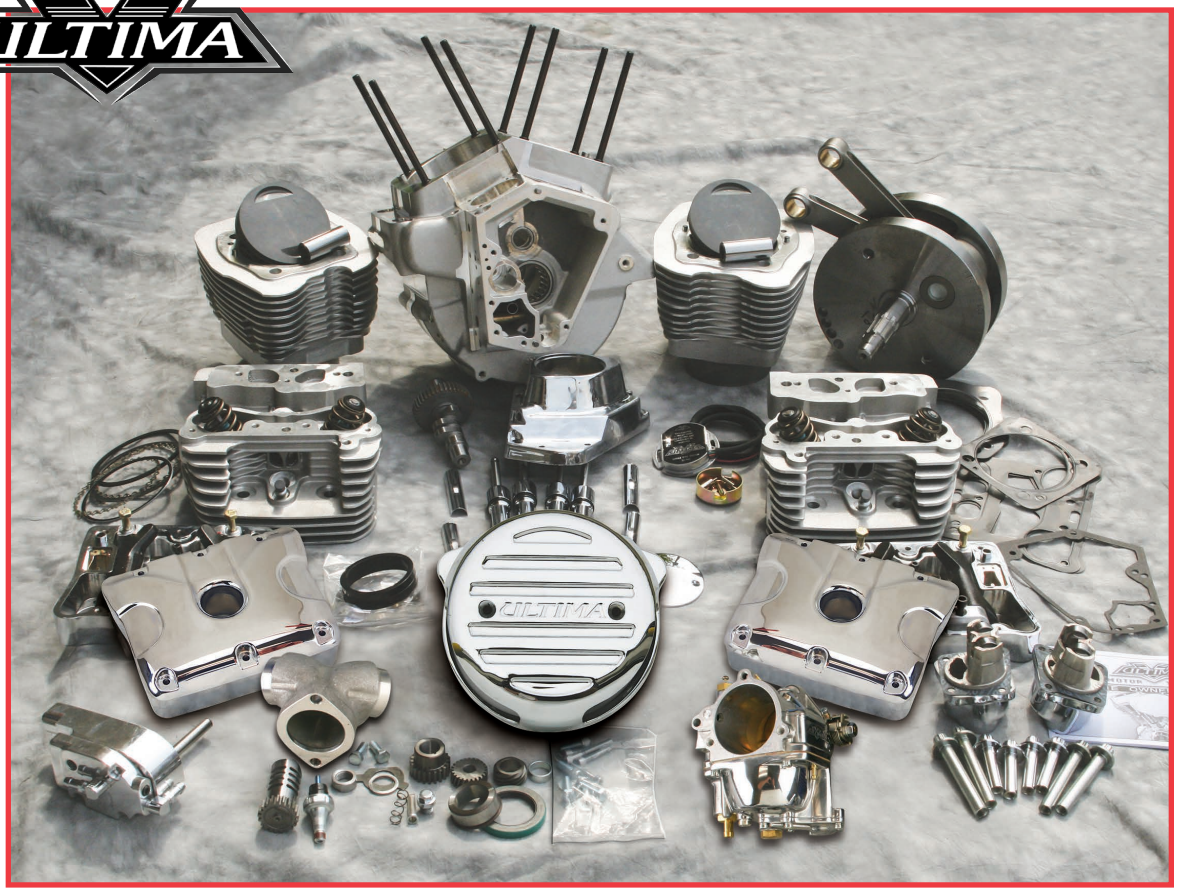

Ultima® offers these complete unassembled engines for those who choose to build their own powerplant. Made up of the same quality components as our assembled competition series engines. Cases are finished, crank shafts come trued and balanced, cylinders are fit, heads are assembled.

*NOT EPA COMPLIANT

For specs on all displacements, see page 6/13 thru 6/17.

100 C.I.
107 C.I.
113 C.I.
120 C.I.
127 C.I.
140 C.I.

100 CI

298-250U	Unassembled Natural Finish
298-251U	Unassembled Black Finish
298-252U	Unassembled Polished Finish

107 CI

298-230U	Unassembled Natural Finish
298-231U	Unassembled Black Finish
298-232U	Unassembled Polished Finish

113 CI

298-253U	Unassembled Natural Finish
298-254U	Unassembled Black Finish
298-255U	Unassembled Polished Finish

120 CI

298-256U	Unassembled Natural Finish
298-257U	Unassembled Black Finish
298-258U	Unassembled Polished Finish

127 CI

298-272U	Unassembled Natural Finish
298-273U	Unassembled Black Finish
298-274U	Unassembled Polished Finish

140 CI

298-243U	Unassembled Natural Finish
298-244U	Unassembled Black Finish
298-245U	Unassembled Polished Finish

ULTIMA® COMPLETE UNASSEMBLED GEN II FATSO™ SHORT BLOCKS

Ultima® Gen II Fatso™ case kit: Natural or black finish. Includes cam chest small parts, Timken bearing, sprocket shaft spacer & sprocket shaft seal. *NOT EPA COMPLIANT

Gen II Fatso™ Short Block

- 4.25 stroke 8.25 diameter 3 piece crankshaft - requires MWM#98-570 pinion gear coversion kit.
- Accepts Twin Cam® pistons with minor modifications - Piston skirts must be notched for bottom dead center.
- Accepts Twin Cam® cylinders with minor modifications - Cylinders must have .060 chamfer on base gasket surface added between cylinders.
- Accepts Twin Cam® cylinder heads with modifications - Intake push rod tube locations must be relocated to Evolution V-twin positions and angle.
- Must use .250 offset lifter blocks, MWM #91-697 - corrects lower end of push rod tube angle
- Use 92'/later cam cover for head breather



RECOMMENDED PARTS (ORDER SEPERATELY)

98-517 92'-Later HO polished oil pump
98-520 92'-Later HO black oil pump
98-359 Oil pump drive gear
98-358 Oil pump driven gear
88-110 84'/90' cam cover for bottom breather (chrome)

12 MONTH MATERIAL & WORKMANSHIP WARRANTY FORM DATE OF PURCHASE. *NOT EPA COMPLIANT

216-46 Natural Case
216-47 Black Case

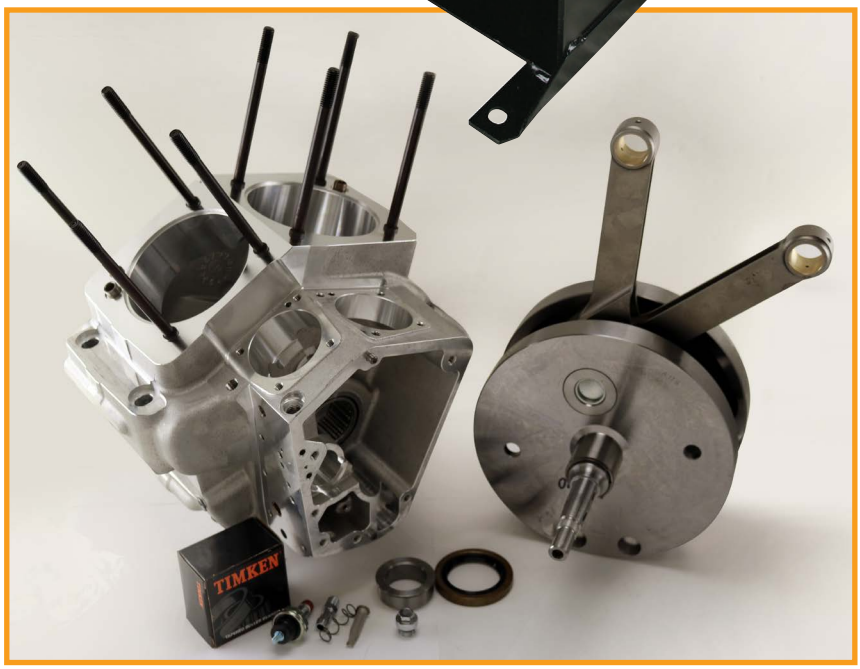

ULTIMA'S® ENGINE REBUILD PROGRAM

MIDWEST MOTORCYCLE SUPPLY'S ENGINE REBUILD PROGRAM IS AN INCREDIBLE VALUE!

Breathe new life into your tired V-Twin. Ultima® Motorworks/Midwest is offering their motor rebuilding service to Midwest dealers Worldwide. By offering this service, your customer gets a quality rebuild complete with a 6 month, 6,000 mile warranty. But Wait!!! This rebuild service also includes S&S® & Harley-Davidson® Evo V-Twins as well! Now you have another option to get that motor rebuilt correctly & at an unbeatable price. Arranging the rebuild is a simple process of having the authorized dealer remove your motor & pack it in a manner so that it will not be damaged in transit whereupon they will contact their Midwest Sales Rep to arrange an agreed upon pick-up date. Once received by the trained staff at Ultima®, your engine will be inspected for any obvious cosmetic flaws or damage. Once the engine has been checked in, the dealer will then be contacted before dis-assembly of the motor begins. Your motor will then be completely disassembled, cleaned & thoroughly inspected. This service is offered to all Ultima® motors 80" thru 140" & select Big Twin Evolution style engines.

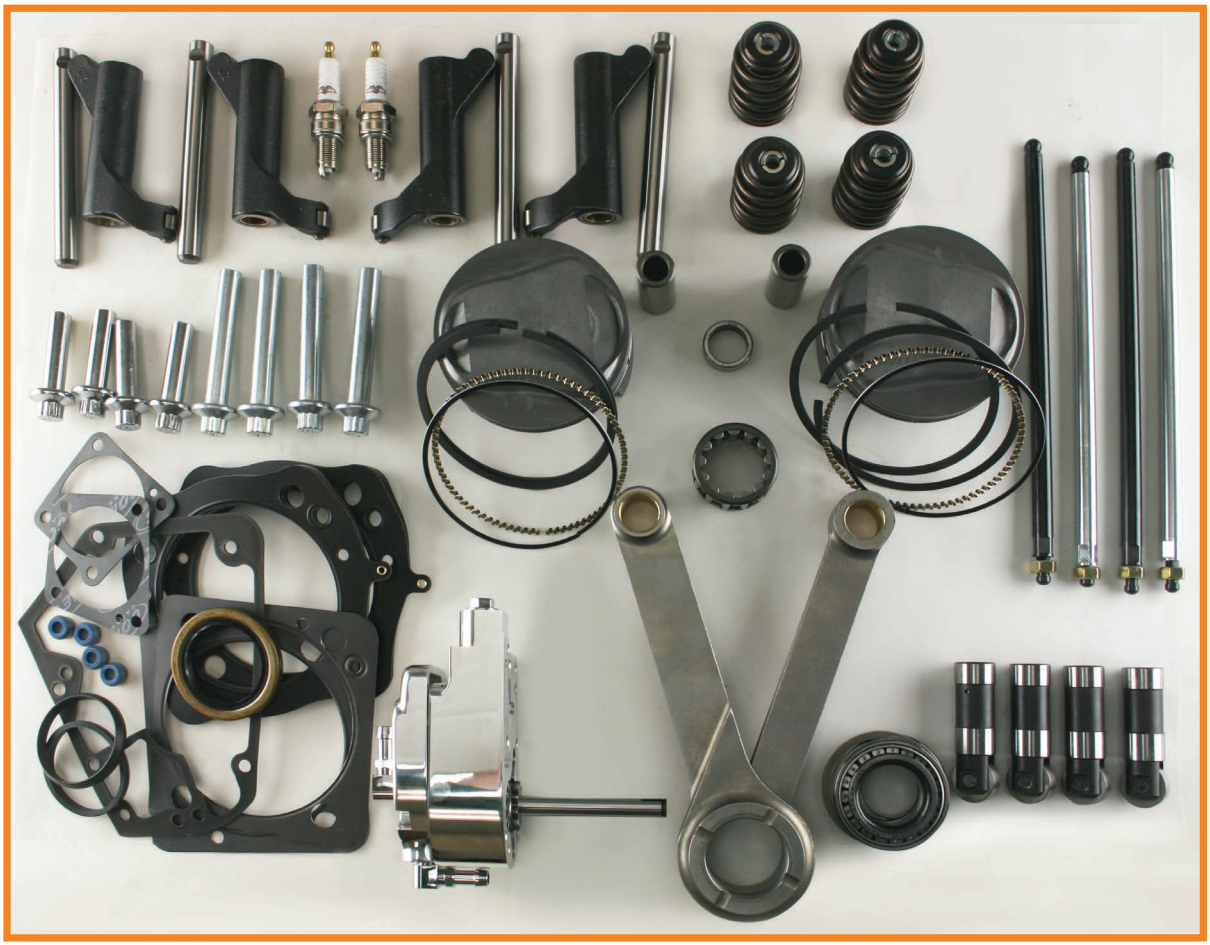

All Ultima® motors will be upgraded to the latest production specifications including but not limited to:

- BeeHive valve springs.
- Ultima® High Output oil pump.
- Heavy duty Ultima® lifters.
- Tapered Chromoly pushrods when applicable.
- Mahle forged pistons when applicable.

***NOTE:** ENGINES THAT ARE CATASTROPHICALLY DAMAGED OR HAVE OBVIOUS FAULTY COMPONENTS WILL NOT BE ELIGIBLE FOR A STANDARD ENGINE REBUILD. ADDITIONAL COSTS WILL BE DETERMINED BY ULTIMA® & APPROVED BY THE CUSTOMER BEFORE ANY WORK WILL BE PERFORMED.
THIS OFFER IS FOR COMPLETE MOTOR REBUILDS ONLY.

Standard services performed :

- All bearings, bushings & hardware will be replaced as necessary.
- New pistons, gaskets & seals.
- 5 piece crankshaft assemblies will be rebuilt & trued as necessary.
- 3 Piece crankshaft assemblies will be rebuilt as needed or replaced at additional cost.
- Cylinders will be Diamond honed to the appropriate size for your new pistons & rings.
- Oil pumps will be rebuilt or replaced as necessary.

ALL REBUILT MOTORS CARRY A 6 MONTH 6,000 MILE GUARANTEE ON PARTS & LABOR.



For 1999 to 2005 Twin Cam A engines, original equipment in FL touring bikes and the Dyna line.

By offering this service, your customer gets a quality rebuild complete with a 6 month, 6,000 mile warranty. But Wait!!! This rebuild also includes upgrading to hydraulic cam tensioners, eliminating the troublesome spring tensioners and rear cam bearing failures!

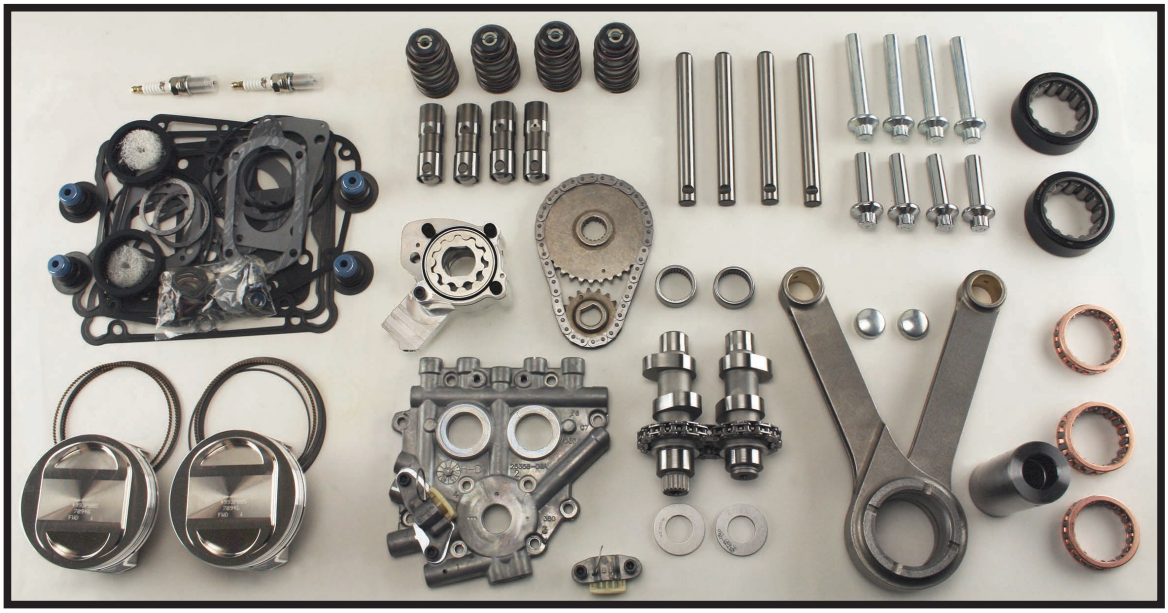

The standard Ultima® Twin Cam® rebuild includes but is not limited to:

- All bearings replaced.
- Crankshaft rebuilt with new crank pin, connecting rods, rod bearings and rebalanced.
- Cam chest upgrade as described below.
- Cylinders Diamond Honed to appropriate size for new pistons and rings.
- Cylinder heads rebuilt using Ultima Beehive springs.
- Assembled with all new gaskets and seals.
- Engine is pre run under power to verify oil pressure and compression before shipping.
- Upgraded to hydraulic cam support plate & hydraulic cam tensioners
- Late style high volume oil pump
- Stock grind replacement camshafts (cams must be changed to hydraulic cam plate style)
- Rebuilt TC engines carry a 6 month 6000 mile warranty on parts and labor

Cam shaft upgrades are available at additional charge. At the time of rebuild customer has the option of upgrading from 88 cid to 95 cid, 96 cid to 103 cid, etc.

Arranging the rebuild is a simple process of removing your customer's engine and packing it in a manner so that it will not be damaged in transit whereupon they will contact Ultima® to arrange an agreed upon pick-up date. Once received by the trained staff at Ultima your engine will be inspected for any obvious cosmetic flaws or damage. Once the engine has been checked in, the dealer will then be contacted before dis-assembly of the engine begins. Your motor will then be completely disassembled, cleaned & thoroughly inspected.

290-101 Rebuild TC 88 - HYD Tensioners
290-102 Rebuild TC 95 - HYD Tensioners
290-103 Rebuild TC 88 to 95 - HYD Tensioners
290-105 Rebuild TC 103 - HYD Tensioners
290-106 Rebuild TC 96 to 103 - HYD Tensioners
290-107 Rebuild TC 96 - HYD Tensioners

2007 & Later "A" Engines add to above pricing

ULTIMA® COMPETITION SERIES ENGINE FOR TWIN CAM® REPLACEMENT

ENGINE SPECS: 113 C.I.

TWIN CAM® REPLACEMENT

***NOT EPA COMPLIANT**

113 C.I.

Displacement: cc/ci 1853/113
Bore: 4.000”
Stroke: 4.500”
Compression: 10.0:1
Compression Release Valves
Valve: Int 2.100”
Valve: Ex 1.70”
Cam lift intake: .570”
Cam lift exhaust: .570”
Pushrod 4140 adjustable steel
Piston: Forged Dome
Rod length 7.67”
Flywheel Forged 3 Piece
Rocker Boxes ‘93 Later EVO
Rocker Ratio 1.675
Billet Oil Pump
Late Model Hydraulic Chain Tensioners
Billet Cam Support Plate

CASES

Ultima® cases for Twin Cam utilize Timken® sprocket shaft bearings, late model cam bearings and pinion bearing. Counterbored stainless allen head case bolts. Close machining tolerances. Made from prime C356-T6 aluminum that is superior in strength to A356. Styling and cosmetic machining for a custom look.

CRANKSHAFT

Our state of the art designed crankshaft incorporates a massive 1.670 diameter pin that is pressed into the one piece, heat treated, 4140 steel flywheel half making these crankshafts some of the strongest available on the market today. Crank pins are installed with .008” press fit. These crankshafts feature light weight 7.67” long H-Beam rods with 0.927 diameter wrist pins to handle all the power you can throw at them. These are also balanced using our exclusive methods making these some of the smoothest engines in the industry.

CYLINDER

C356 Casting. Cast-in liners will not move. All fins are machined for an excellent cosmetic appearance.

CYLINDER HEAD

C356-T6 Casting. All fins are machined for excellent cosmetic appearance. 2.100 stainless Intake Valves. 1.700 stainless Exhaust Valves. Manganese Bronze guides. High Silicon Wire Valve Spring with Chromoly Retainer. Compression release valves.

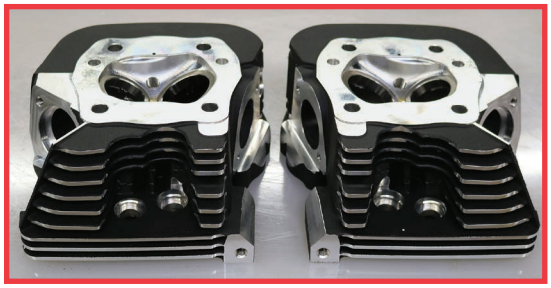

A. *REPLACEMENT HEADS FOR ULTIMA® TC*

SINGLE CYLINDER HEADS COMPLETE

93-830 Ultima® TC Front cylinder head, 4.00” & 3.875” Black
93-831 Ultima® TC Rear cylinder head, 4.00” & 3.875” Black
93-840 Ultima® TC Front cylinder head, 4.00” & 3.875” Silver
93-841 Ultima® TC Rear cylinder head, 4.00” & 3.875” Silver
93-50 Ultima® TC Front cylinder head, 4.00” & 3.875” Polished
93-51 Ultima® TC Rear cylinder head, 4.00” & 3.875” Polished



B. *ULTIMA® TC REPLACEMENT CYLINDERS*

SINGLE CYLINDERS

93-872 Ultima® TC Front cylinder, 4.00” Black
93-873 Ultima® TC Rear cylinder, 4.00” Black
93-870 Ultima® TC Front cylinder, 4.00” Silver
93-871 Ultima® TC Rear cylinder, 4.00” Silver
93-52TC Ultima® TC Front cylinder, 4.00” Polished
93-53TC Ultima® TC Rear cylinder, 4.00” Polished
93-878 Ultima® TC Front cylinder, 3.875” Black
93-879 Ultima® TC Rear cylinder, 3.875” Black
93-876 Ultima® TC Front cylinder, 3.875” Silver
93-877 Ultima® TC Rear cylinder, 3.875” Silver
93-66TC Ultima® TC Front cylinder, 3.875” Polished
93-67TC Ultima® TC Rear cylinder, 3.875” Polished

ULTIMA® COMPLETE COMPETITION SERIES ENGINE SPECS: 100, 107, 113 C.I. FOR EVO®

100 C.I.

Bore: 3.875”
Stroke: 4.250”
Piston: Forged dome
Compression: 9:1
Camshaft: 262 Duration 0.520” lift
Valve Spring: Ultima®
Chrome Reed Valve Rocker Boxes
HO Billet Oil Pump
Chrome Tappet Blocks
Single-fire Ignition
Includes Ultima® R-1 Carburetor
Compression Release Valves

*NOT EPA COMPLIANT

107 C.I.

Bore: 4.000”
Stroke: 4.250”
Piston: Forged dome
Compression: 10:1
Camshaft: 248 Duration 0.625” lift
Valve Spring: Ultima®
Chrome Reed Valve Rocker Boxes
HO Billet Oil Pump
Chrome Tappet Blocks
Single-fire Ignition
Includes Ultima® R-1 Carburetor
Compression Release Valves

*NOT EPA COMPLIANT

113 C.I.

Bore: 4.000”
Stroke: 4.500”
Piston: Forged dome
Compression: 10.2:1
Camshaft: 264 Duration 0.640” lift
Valve Spring: Ultima®
Chrome Reed Valve Rocker Boxes
HO Billet Oil Pump
Chrome Tappet Blocks
Single-fire Ignition
Includes Ultima® R-1 Carburetor
Compression Release Valves

*NOT EPA COMPLIANT

100, 107, 113 C.I.

CASES

Large bore breather for increased crank case vacuum and less blow by. Alignment dowels for true line bore. Counterbored stainless allen head case bolts. Close machining tolerances. Made from prime C356-T6 aluminum that is superior in strength to A356. Styling and cosmetic machining for a custom look.

CRANKSHAFT

Our state of the art designed crankshaft incorporates a massive 1.670 diameter pin that is pressed into the one piece, heat treated, 4140 steel flywheel half making these crankshafts some of the strongest available on the market today. These crankshafts feature light weight 7.440” long H-Beam rods with 0.927 diameter wrist pins to handle all the power you can throw at them. These are also balanced using our exclusive methods making these some of the smoothest engines in the industry.

CYLINDER

C356 Casting. Cast-in liners will not move. All fins are machined for an excellent cosmetic appearance.

CYLINDER HEAD

C356-T6 Casting. All fins are machined for excellent cosmetic appearance. Twin Cam® Styling. 30% more fin area than Evolution® style heads for cooler running. 2.100 stainless Intake Valves. 1.700 stainless Exhaust Valves. Manganese Bronze guides. High Silicon Wire Valve Spring with Chromoly Retainer. Compression release valves.

ULTIMA® COMPLETE COMPETITION SERIES ENGINE SPECS: 120, 127, 140 C.I. FOR EVO®

120 CI

Bore: 4.250”
Stroke: 4.250”
Piston: Forged Flat Top
Compression: 9.8:1
Camshaft: 0.640” lift / 264 Duration
Valve Spring: Ultima®
Chrome Reed Valve Rocker Boxes
HO Billet Oil Pump
Chrome Tappet Blocks
Single-fire Ignition
Includes Ultima® R-1 Carburetor
Compression Release Valves

*NOT EPA COMPLIANT

127 CI

Bore: 4.250”
Stroke: 4.500”
Piston: Forged Flat Top
Compression: 10.2:1
Camshaft: 0.640” lift / 264 Duration
Valve Spring: Ultima®
Chrome Reed Valve Rocker Boxes
HO Billet Oil Pump
Chrome Tappet Blocks
Single-fire Ignition
Includes Ultima® R-1 Carburetor
Compression Release Valves

*NOT EPA COMPLIANT

140 CI

Bore: 4.400”
Stroke: 4.625”
Piston: Forged Flat Top
Compression: 10.8:1
Camshaft: 0.640” lift / 268 Duration
Valve Spring: Ultima®
Chrome Reed Valve Rocker Boxes
HO Billet Oil Pump
Chrome Tappet Blocks
Single-fire Ignition
Includes Ultima® R-1 Carburetor
Compression Release Valves

*NOT EPA COMPLIANT

120, 127 C.I.

CASES

Large bore breather for increased crank case vacuum and less blow by. Alignment dowels for true line bore. Counterbored stainless allen head case bolts. Close machining tolerances. Made from prime C356-T6 aluminum that is superior in strength to A356. Styling and cosmetic machining for a custom look.

CRANKSHAFT

Our state of the art designed crankshaft incorporates a massive 1.670 diameter pin that is pressed into the one piece, heat treated, 4140 steel flywheel half making these crankshafts some of the strongest available on the market today. These crankshafts feature 7.700” long H-Beam rods with 0.927 diameter wrist pins to handle all the power you can throw at them. These are also balanced using our exclusive methods making these some of the smoothest engines in the industry.

CYLINDER

C356 Casting. Cast in liners will not move. All fins are machined for an excellent cosmetic appearance.

CYLINDER HEAD

C356 Casting. All fins are machined for excellent cosmetic appearance. Twin Cam® Styling means 30 % more fin than most Evolution® style heads for cooler running. Compression release valves. 2.100 stainless intake valves, 1.700 stainless exhaust valves. Manganese Bronze guides. High silicon wire valve spring with chromoly retainer.

140 C.I.

CASES

Large bore breather for increased crank case vacuum and less blow by. Alignment dowels for true line bore. Counterbored stainless allen head case bolts. Close machining tolerances. Made from prime C356-T6 aluminum that is superior in strength to A356. Styling and cosmetic machining for a custom look.

CRANKSHAFT

Our state of the art designed crankshaft incorporates a massive 1.670” diameter pin that is pressed into the one piece, heat treated, 4140 steel flywheel half making these crankshafts some of the strongest available on the market today. These crankshafts feature all new 8.000” long H-Beam rods with 0.927 diameter wrist pins to handle all the power you can throw at them. These are also balanced using our exclusive methods making these some of the smoothest engines in the industry.

CYLINDER

C356-T6 Casting. Cast in liners will not move. All fins are machined for an excellent cosmetic appearance.

CYLINDER HEAD

C356-T6 Casting. All fins are machined for excellent cosmetic appearance. Twin Cam® Styling means 30% more fin than most Evolution® style heads for cooler running. Compression release valves. 2.300 stainless intake valves, 1.800 stainless exhaust valves. CNC ported runners. Manganese Bronze guides. High silicon wire valve spring with titanium retainer.

ULTIMA® SHOVELHEAD SERIES ENGINE SPECS: 96 C.I.

96 C.I.

Bore: 3.625”
Stroke: 4.625”
Piston: Forged dome
Compression: 9.5:1
Camshaft: 0.450” lift / 256 Duration
Chrome Rocker Boxes
92’ & Later S.V. Billet Oil Pump
Chrome Tappet Blocks
Single-fire Ignition

*NOT EPA COMPLIANT

*NOTE: INTAKE MANIFOLD AND CARBURETOR NOT INCLUDED. IGNITION INCLUDED

SHOVELHEAD 96 C.I.

CASES

Large bore breather for increased crank case vacuum and less blow by. Alignment dowels for true line bore. Counterbored stainless allen head case bolts. Close machining tolerances. Made from prime C356-T6 aluminum that is superior in strength to A356. Styling and cosmetic machining for a custom look.

CRANKSHAFT

Forged 4140 Steel. Dynamic balanced for the smoothest running engines in the industry. Light weight 7.440” high-performance H-beam rods w/0.792” pins.

CYLINDER

Traditional cast iron

CYLINDER HEAD

C356-T6 Casting. 1.950 stainless Intake Valves. 1.750 stainless Exhaust Valves. Manganese Bronze guides. High Silicon Wire Valve Spring with Chromoly Retainer. Compression release valve. 3-bolt exhaust manifold. Dual plug.

ULTIMA® POWER PACKAGES



92-405

100”-107” EVO POWER PACKAGE

Convert and freshen up your older existing Ultima® 100” to a 107” with this simple bolt on kit.

92-403 Natural, 107” Ultima® EVO power package
92-404 Black, 107” Ultima® EVO power package
92-405 Polished, 107” Ultima® EVO power package

NOTE: Power packages include parts shown. Head and base gaskets included but not shown. Must order supporting parts separately.

SUPPORTING PARTS

ROCKER BOX GASKETS

77-109 Ultima® solid top rocker box
77-111 Ultima® cast top rocker box w/hole in center
77-443 Zodiac (hole in center) rocker box
77-414 84’-91’ EVO (3 piece rocker box)
77-413 91’-99’ EVO (3 piece rocker box)

ULTIMA® POWER PACKAGES

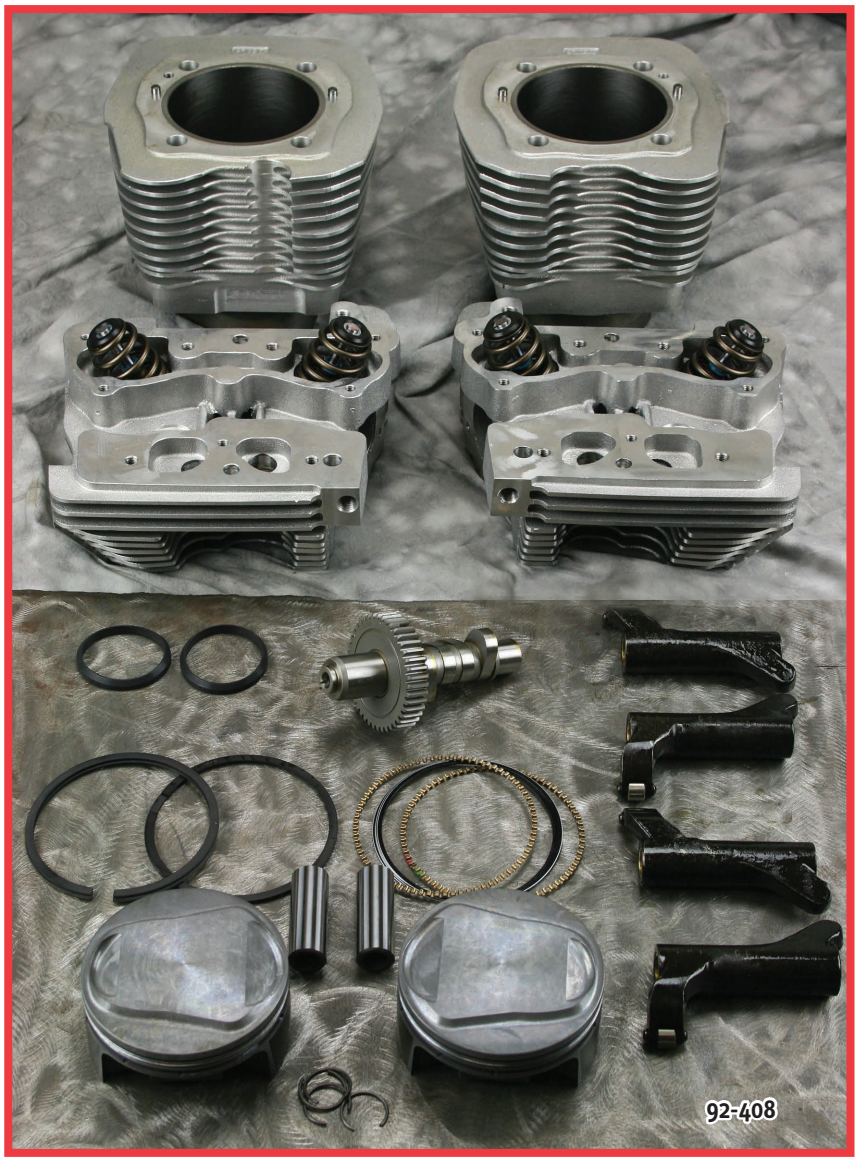

107" COMPLETE EVO POWER PACKAGE

Do you have an older Ultima® or S&S® 107" that needs some freshening up? Bump up to our 107" hop-up kit. With Ultima®'s better flowing heads, cam, and roller rocker combo you can expect superior power and unsurpassed throttle response. R-1 manifold included.

92-409 Natural, 107" Ultima® EVO power package
92-410 Black, 107" Ultima® EVO power package
92-411 Polished, 107" Ultima® EVO power package

NOTE: Power packages include parts shown. Head, base & cam cover gaskets included but not shown. Must order supporting parts separately.

113" COMPLETE EVO POWER PACKAGE

Do you have an older Ultima® or S&S® 113" that needs some work? Bump up to our 113" hop-up kit. With Ultima®'s better flowing heads, cam, and roller rocker combo you can expect superior power and unsurpassed throttle response. R-1 manifold included.

92-406 Natural, 113" Ultima® EVO power package
92-407 Black, 113" Ultima® EVO power package
92-408 Polished, 113" Ultima® EVO power package

NOTE: Power packages include parts shown. Head, base & cam cover gaskets included but not shown. Must order supporting parts separately.

SUPPORTING PARTS

ROCKER BOX GASKETS

77-109 Ultima® solid top rocker box
77-111 Ultima® cast top rocker box w/hole in center
77-443 Zodiac (hole in center) rocker box
77-414 84'-91' EVO (3 piece rocker box)
77-413 91'-99' EVO (3 piece rocker box)

ULTIMA® POWER PACKAGES



TWIN CAM®-A MOTOR PERFORMANCE HEAD KIT

Ultima®'s Twin Cam® performance head kits offer easy bolt on power. Ultima®'s high flow heads offer increased horsepower and torque just by replacing your stock Twin Cam® heads and rocker boxes.

92-412 Black, Twin Cam® performance head kit
92-413 Silver, Twin Cam® performance head kit

NOTE: Power packages include parts shown. Must order supporting parts separately.

SUPPORTING PARTS

77-475 Head gasket, .035, recommended thickness
77-476 Head gasket, .046
77-477 Head gasket, .054

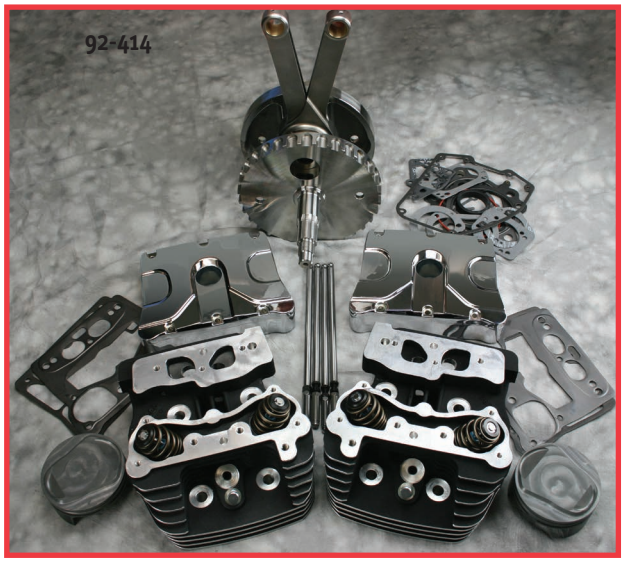

100" TWIN CAM®-A MOTOR POWER PACKAGE

Ultima®'s 100 C.I. Twin Cam® power package turns your stock 88 cubic inch motor into a 100 C.I. stroker. The kit combines Ultima®'s high flow head with a 4.25" stroker crank. New cylinders are available as an add-on or you can bore your stock 96" cylinders to accomodate the 3.875" bore pistons.

92-414 Black, 100" Ultima® Twin Cam® power package
92-415 Silver, 100" Ultima® Twin Cam® power package

NOTE: Power packages include parts shown. Must order supporting or add-on parts separately.

ADD-ONS

93-878 Front 3.875" Twin Cam® black cylinder
93-879 Rear 3.875" Twin Cam® black cylinder
93-876 Front 3.875" Twin Cam® silver cylinder
93-877 Rear 3.875" Twin Cam® silver cylinder
114-206 Chain drive cam, Softails®



113" TWIN CAM®-A MOTOR POWER PACKAGE

Ultima®'s 113 C.I. Twin Cam® power package turns your stock motor into a 113 C.I. monster. Everything is included in the kit except the cam that suits your particular motor. Case machining will be required to fit the 4" bore cylinders.

92-416 Black, 113" Ultima® Twin Cam® power package
92-417 Silver, 113" Ultima® Twin Cam® power package

NOTE: Power packages include parts shown. Must order supporting or add-on parts separately.

NOTE: FUEL INJECTED MODELS WILL NEED A FUEL INJECTION TUNER WITH ALL OF THESE KITS.

ULTIMA® ENGINE GASKETS

A. GASKET KITS FOR ULTIMA® ENGINES

77-436 Engine gasket kit for 80 C.I. Ultima® engines.
77-438 Head & base gasket kit for 96 C.I. Ultima® engines.
77-439 Engine gasket kit for 96 C.I. Ultima® engines.
77-440 Engine gasket kit for Ultima® engines 100 C.I., 107 C.I. & 113 C.I.
77-441 Head & base gasket kit for Ultima® engines 100 C.I., 107 C.I. & 113 C.I.
77-442 Engine gasket kit for Ultima® engines 120 C.I. & 127 C.I.
77-444 Head & base gasket kit for Ultima® engines 120 C.I. & 127 C.I. .035
77-470 Engine gasket kit for Ultima® engines 130 C.I. & 140 C.I.
77-471 Head & base gasket kit for Ultima® engines 130 C.I. & 140 C.I.
77-110 Head gasket kit for Ultima® engines 130 C.I. & 140 C.I.
77-445 Complete gasket kit for Ultima® Shovelhead engines 96 C.I.

6

C. ULTIMA® MOTOR BOLT KIT

Complete motor bolt kit for all Ultima® engines, except shovelhead.
40-619 Ultima® motor bolt kit.

D. ULTIMA® MOTOR BOX

97-315 Replacement Ultima® carboard motor box. No stand or foam included.

D



B. INDIVIDUAL GASKETS & SEALS FOR ULTIMA® ENGINES

PART#	QTY. NEEDED PER MOTOR	DESCRIPTION
77-111	1	Rocker box gasket kit, Ultima® die cast rocker box with center hole
77-109	1	Rocker box gasket kit, Ultima® die cast rocker box (no hole)
77-443	1	Rocker box gasket kit, old style w/hole in middle
78-700	1	Shovelhead rocker box
95-133	2	Intake manifold to head seals
42-302	1	Carb to manifold spigot seal, 42mm
42-303	1	Carb to manifold spigot seal, 45mm
42-305	1	Carb to manifold spigot seal, 48mm
91-770	4	Valve stem seals, EVO
91-779	4	Valve stem seals, Shovelhead
78-683	2	Head gasket, 130/140 C.I., Front or Rear
78-680	2	Head gasket, 120/127 C.I., Front or Rear, .054
78-678	2	Head gasket, 100/107/113 C.I., Front or Rear, .035
78-686	1	Head gasket, 120/127 C.I., Front or Rear, .035
78-685	1	Head gasket, 100/107/113 C.I., Front or Rear, .054
78-703	1	Head gasket, 96 C.I. Shovelhead, Front or Rear
78-681	1	Base gasket, 130/140 C.I., Front, MLS
78-682	1	Base gasket, 130/140 C.I., Rear, MLS
78-712	1	Base gasket, 120/127 C.I., Front, MLS
78-713	1	Base gasket, 120/127 C.I., Rear, MLS
78-712	1	Base gasket, 120/127 C.I., Front, Paper
78-713	1	Base gasket, 120/127 C.I., Rear, Paper
78-710	1	Base gasket, 100/107/113 C.I., Front, Paper
78-711	1	Base gasket, 100/107/113 C.I., Rear, Paper
78-702	1	Base gasket, 96 C.I. Shovelhead, Front or Rear
78-673	4	Pushrod tube, middle o-ring
78-674	4	Pushrod tube, bottom o-ring
78-675	4	Pushrod tube, upper o-ring
78-670	1	Rear tappet guide gasket
78-671	1	Front tappet guide gasket
77-715	1	Ultima® Cam Cover gasket standard
95-777	1	Camshaft seal / Package of 5
95-777A	1	Camshaft seal / Each
98-625	1	Ultima® H.O. oil pump gasket, base
98-627	1	Ultima® H.O. oil pump gasket, cover
95-805	1	Crankshaft main seal

GASKET SET

ULTIMA® GASKET SERIES FOR HD® ENGINES

Go to end of section 6 for Ultima® & Cometic® Gaskets for HD® Engines

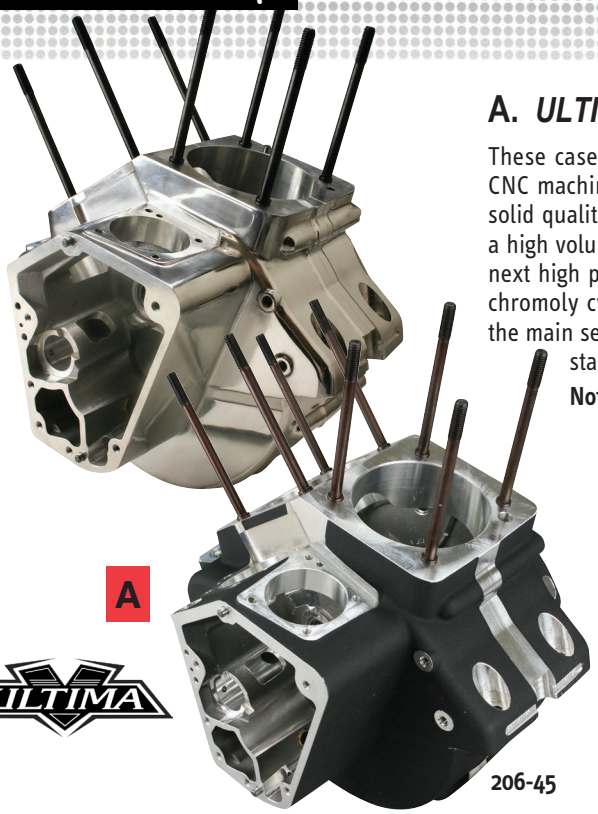

206-45

A. *ULTIMA® ENGINE CASES EVOLUTION STYLE 84'-99'*

These cases are produced from prime C356-T6. Machining is done on state of the art CNC machining centers using hydraulic fixturing for repeatability. This along with other solid quality features like counter bored allen case bolts, large 1/4" NPT drain plug, and a high volume ported breather make these a professional engine builders choice for your next high performance engine. All case kits come with the main bearings, cam bearing, chromoly cylinder studs installed and the pinion race sized to 1.751". Also included are the main seal, main seal spacer, top end feed screen and spring, chrome timing hole plug, stainless steel case bolts and the oil pressure gauge.

Note: Sized for red pinion

ENGINE CASE KITS

206-54 1984 Thru 1991, 3.500" bore Natural finish.
206-55 1984 Thru 1991, 3.500" bore Black finish.
206-52 1984 Thru 1991, 3.625" bore Natural finish case kit.
206-53 1984 Thru 1991, 3.625" bore Black finish.
206-56 1992 & Later, 3.500" bore Natural finish.
206-57 1992 & Later, 3.500" bore Black finish.
206-50 1992 & Later, 3.625" bore Natural finish.
206-51 1992 & Later, 3.625" bore Black finish.
206-40 Fatso™ engine case, Twin Cam® top Evo lower, Natural finish.
206-41 Fatso™ engine case, Twin Cam® top Evo lower, Black finish.
206-42 1992 & Later 3.875" & 4.000" bores, S&S® bolt pattern, Natural.
206-43 1992 & Later 3.875" & 4.000" bores, S&S® bolt pattern, Black.
206-72 1992 & Later 3.875" & 4.000" bores, S&S® bolt pattern, Polished.
206-70 1992 & Later 3.875" & 4.000" bores, 3Pc flywheel, Natural finish.
206-71 1992 & Later 3.875" & 4.000" bores, 3Pc flywheel, Black finish.
206-73 1992 & Later 3.875" & 4.000" bores, 3Pc flywheel, Polished finish.
206-48 1992 & Later 4.250" bore, Ultima® 120 & 127 C.I., Natural finish.
206-49 1992 & Later 4.250" bore, Ultima® 120 & 127 C.I., Black finish.
206-78 1992 & Later 4.250" bore, Ultima® 120 & 127 C.I., Polished finish.
206-44 1992 & Later 4.400" bore, Ultima® 140 C.I., Natural finish.
206-45 1992 & Later 4.400" bore, Ultima® 140 C.I., Black finish.
206-74 1992 & Later 4.400" bore, Ultima® 140 C.I., Polished finish.

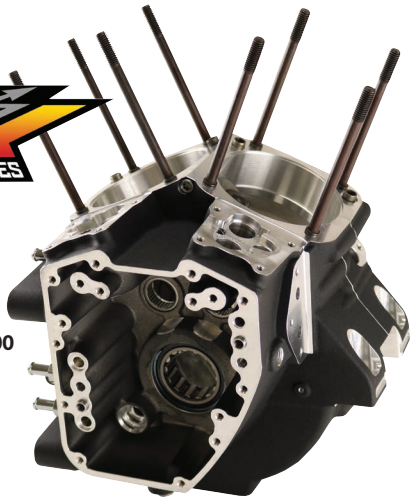

206-100

B. *ULTIMA® ENGINE CASESFOR TWIN CAM REPLACEMENT*

ENGINE CASE KITS

206-100 Ultima® Twin Cam 4.000" bore replacement case, Black
206-101 Ultima® Twin Cam 4.000" bore replacement case, Polished
206-102 Ultima® Twin Cam 4.000" bore replacement case, Silver
206-103 Ultima® Twin Cam stock replacement case, Black
206-105 Ultima® Twin Cam stock replacement case, Polished
206-104 Ultima® Twin Cam stock replacement case, Silver

3.875/4.00 Case design change, summer 2013. Replacement parts for previous models found in Engine Big Book (located after sec. 6 in catalog) based on case code.



206-21

C. *ULTIMA® ENGINE CASES SHOVELHEAD 70'-84'*

1970 - 1984 Case. Cast-in steel inserts guaranteed not to move. Large bore breather for increased crank case vacuum and less blow by. Alignment dowels for true line bore. Counterbored stainless allen head case bolts. Close machining tolerances. Made from prime C356-T6 aluminum. Styling and cosmetic machining for a custom look.

206-25 Stock bore case, Natural finish. Fits 1970-1984 Shovelheads in both 74 C.I. and 80 C.I. Uses 1984-1991 EVO oil pump.
206-21 3.625" bore case, Natural finish. 96" big bore case uses 1992 & later oil pump.
206-22 3.625" bore case, Black finish. 96" big bore case uses 1992 & later oil pump.

ULTIMA® 5-PIECE CRANK ENGINE CASES

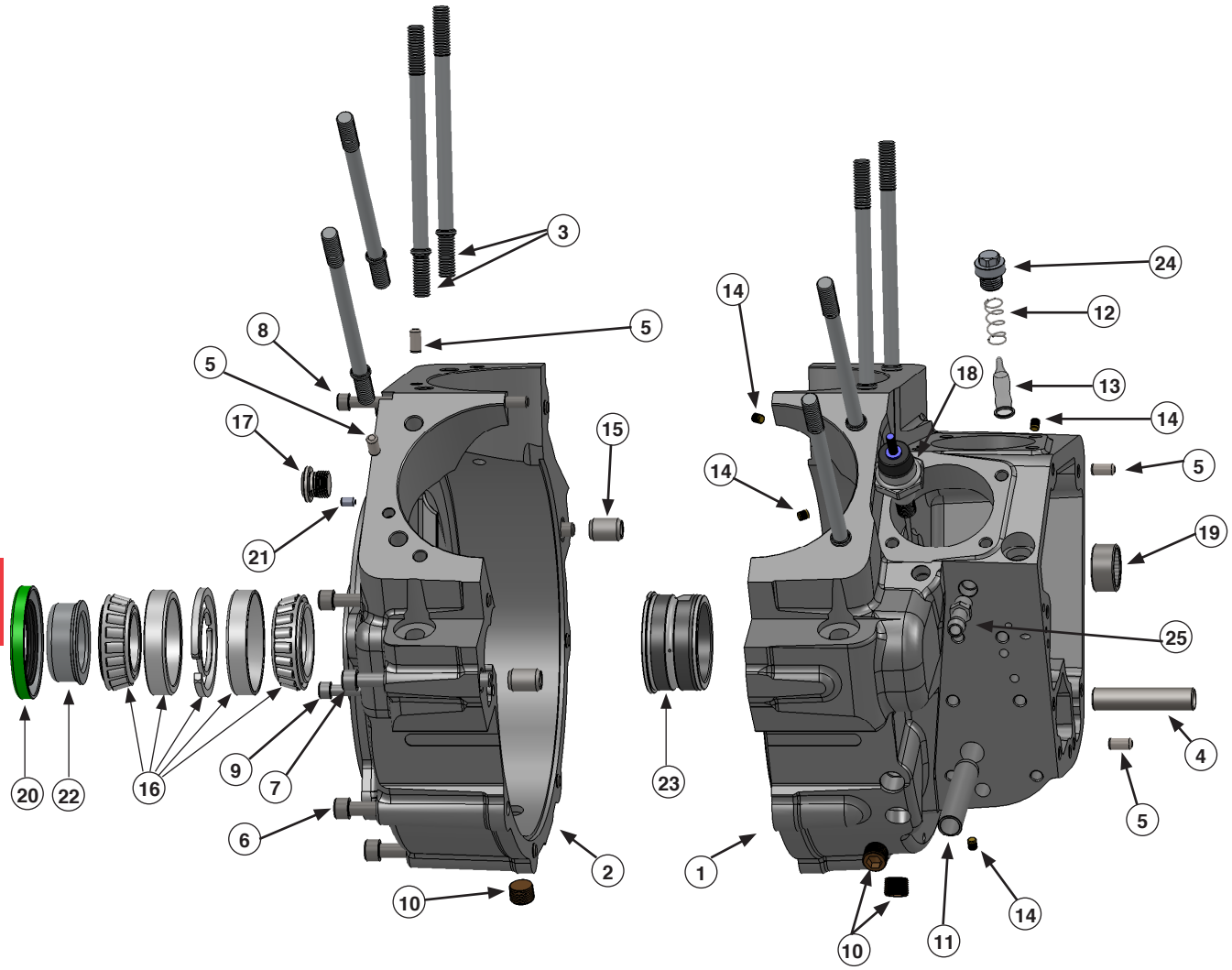

1.	**RIGHT CASE**	MW Evolution
2.	**LEFT CASE**	MW Evolution
3.	**98-536**	6-11/16" length cylinder studs for 3.498" & 3.625"
	98-547	6-1/8" length cylinder studs for 3.875" & 4.000"
4.	**98-542**	Breather seperator tube for case
5.	**98-540**	Dowel pin, 0.250 x 0.500
6.	**300-534**	Case bolt, 5/16 - 18 x 3 - 1/2
7.	**300-533**	Case bolt, 5/16 - 18 x 2 - 3/4
8.	**300-535**	Case bolt, 1/4 - 20 x 4
9.	**300-125**	Case bolt, 1/4 - 20 x 3 - 1/2
10.	**98-544**	1/4" Pipe plug for case
11.	**300-453**	Bushing, oil pump Big Twin 36-L
12.	**98-511**	Spring, crankcase oil screen BT
13.	**98-510**	Cranckcase screen, BT 70/99 24981-70
14.	**98-543**	3/16" High pressure plug for case
15.	**300-541**	Alignment pin, 0.500 x 0.500 for case halves
16.	**95-320**	Bearing, complete HD 9028
17.	**98-490**	Timing plug for Ultima® Motor assy.
18.	**17-65**	Switch, oil pressure V2
19.	**95-173**	Bearing, cam case HD 9058
20.	**95-805**	Oil seal, HD 12026-high quality
21.	**98-545**	10-24 set screw for case
22.	**98-360**	Spacer, SPK shaft 71-99 BT
23.	**95-429**	Race, bearing BT 24599-58B STD 93-up
24.	**41-888**	Screen plug for Ultima® motor
25.	**21-123**	Oil vent line fitting

ULTIMA® 3-PIECE CRANK ENGINE CASES

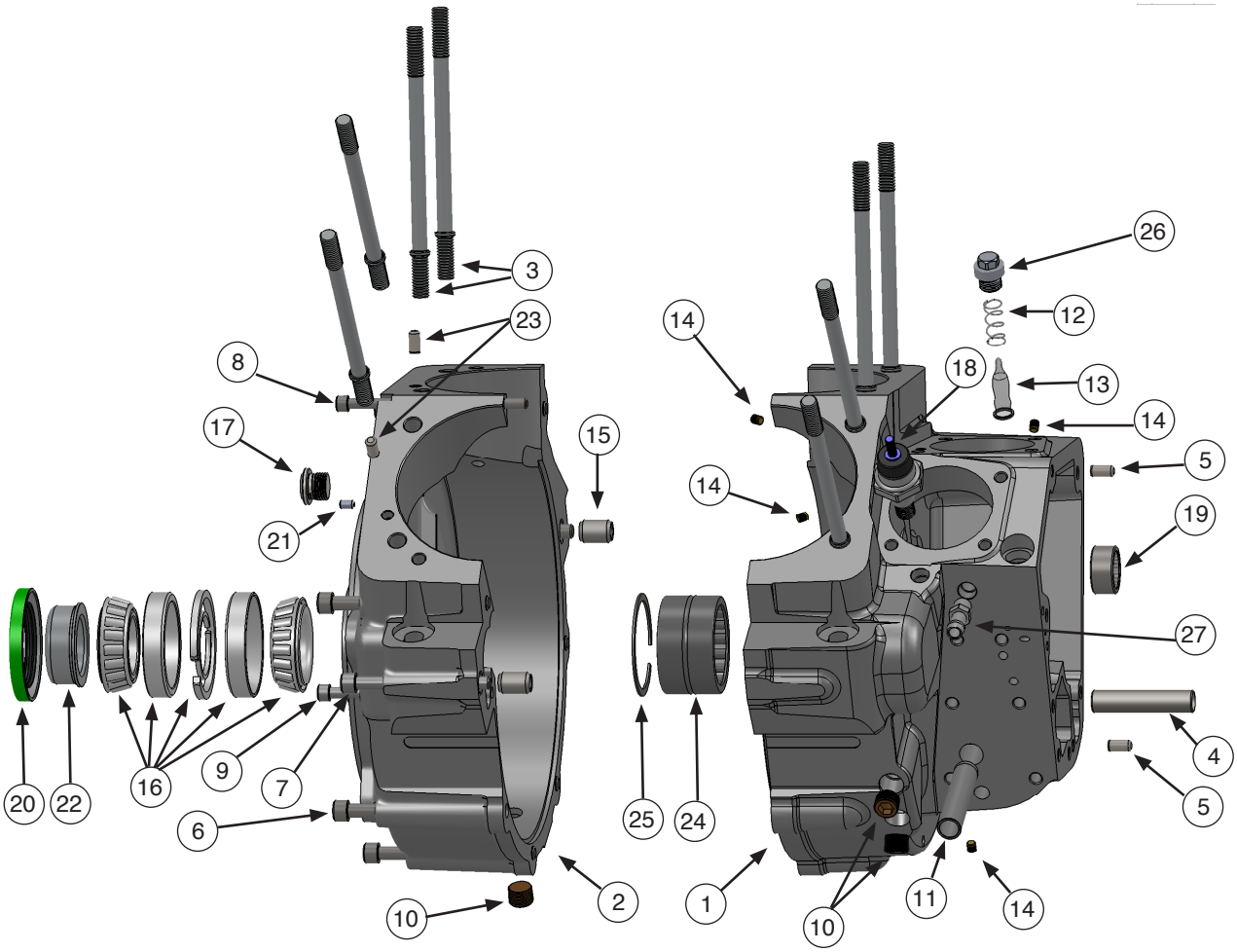

1.	**RIGHT CASE**	MW Evolution
2.	**LEFT CASE**	MW Evolution
3.	**98-547**	6-1/8" length cylinder studs for 4.000", 4.250" & 4.400" bore
4.	**98-542**	Breather seperator tube for case
5.	**98-540**	Dowel pin, 0.250 x 0.500
6.	**300-534**	Case bolt, 5/16 - 18 x 3 - 1/2
7.	**300-533**	Case bolt, 5/16 - 18 x 2 - 3/4
8.	**300-535**	Case bolt, 1/4 - 20 x 4
9.	**300-125**	Case bolt, 1/4 - 20 x 3 - 1/2
10.	**98-544**	1/4" Pipe plug for case
11.	**300-453**	Bushing, oil pump Big Twin 36-L
12.	**98-511**	Spring, crankcase oil screen BT
13.	**98-510**	Cranckcase screen, BT 70/99 24981-70
14.	**98-543**	3/16" High pressure plug for case **(See Note)**
15.	**300-541**	Alignment pin, 0.500 x 0.500 for case halves
16.	**95-320**	Bearing, complete HD 9028
17.	**98-490**	Timing plug for Ultima® Motor assy.
18.	**17-65**	Switch, oil pressure V2
19.	**95-173**	Bearing, cam case HD 9058
20.	**95-805**	Oil seal, HD 12026-high quality
21.	**98-545**	10-24 set screw for case
22.	**98-360**	Spacer, SPK shaft 71-99 BT
23.	**98-540**	Dowel pin for cylinder 1/4 X 1/2 (4.00 bore)
	98-577A	Dowel pin for cylinder 3/8 X 1/2 hollow (4.25 bore & up)
24.	**95-809**	Needle bearing 1.5 shaft 1.25 width
25.	**98-581**	Case pinion bearing retaining ring
26.	**41-888**	Screen plug for Ultima® motor
27.	**21-123**	Oil vent line fitting

NOTE:
EG cases, 4-1/4, get piston oil jet assemblies, part number:
98-583

ULTIMA® 5-PIECE CRANKSHAFTS

Tired of shaking your teeth out on a 100-mile ride? Replace your old crankshaft with an Ultima® dynamic balanced crankshaft. Lightweight racing connecting rods and our exclusive balancing system makes these an exceptional value. This is the core of your engine and can make or break your ride quality. These crankshafts are 8.500" diameter and utilize cage roller style pinion bearings & 7.440" H-Beam rods. Both replacement and high performance match balanced piston kits are available in standard and oversizes for 80", 89", 96", 100", 107" & 113" engines.

Using 0.792 pins.

98-550 4.625" stroke, 1984 thru 1999 model Evolution style stroker engines. The standard length pinion shaft fits most 89", 96", and 106" engines. See **NOTE 1** below.

98-552 4.250" stroke, 1984 thru 1999 model Evolution style engines & will replace shaker cranks on most 88" & 97" engines. Standard length pinion shaft. See **NOTE 1** below.

98-553 4.500" stroke, 1984 thru 1999 model Evolution style engines with the 1/4" longer pinion shaft. Great replacement for S&S® 113" cranks.

98-554 4.250" stroke, incorporates the 1/4" longer pinion shaft. Great replacement for S&S® 107" cranks.

98-523 4.000" stroke, 1984 thru 1999 model Evolution style engines with the 1/4" longer pinion shaft. Great replacement for S&S® 100" motors.

98-524 4.625" stroke, Shovelhead, used in our Ultima® 96" Shovelhead motor. Has a standard length pinion shaft and features heavy counter weights to allow for balancing for a wide variety of piston weights.

Note 1: This shaft has a long bushing end allowing it to be used on 1990 & later model engines with the stronger 1984 thru 1999 style pinion shaft gear components. You must order Midwest part No. **98-570** pinion conversion package if using on 1990 & later engines.



1.	**Flywheel forging**	
2.	**98-421**	1"-20 nut
3.	**98-422**	3/4"-20 nut
4.	**98-573**	Connecting rod set
5.	**95-145**	Crank race set
6.	**95-259**	Roller bearing set
7.	**95-146**	Wrist pin insert
	95-142	Wrist pin insert +0.002 OS
8.	**98-537**	Crank pin - 1.250
9.	**98-539**	1-1/8"-16 nut
10.	**98-475**	Key, OEM#23985-18
11.	**94-137**	Key, OEM#23985-12
12.	**98-546**	Pinion shaft, std
	98-549	Pinion shaft, 1/4" longer
13.	**98-339**	Sprocket Shaft

SOLD SEPARATELY - NOT INCLUDED IN ABOVE ASSEMPLIES

14.	**98-531**	Retaining ring, pinion bearing
15.	**95-602**	Pinion bearing, white
	95-603	Pinion bearing, green
	95-604	Pinion bearing, red
	95-605	Pinion bearing, blue

ULTIMA® HEAVY COUNTERWEIGHTS

PART#	STROKE
98-654	4.000
98-650	4.250
98-651	4.500
98-652	4.625
98-653	4.750
98-594	no stroke



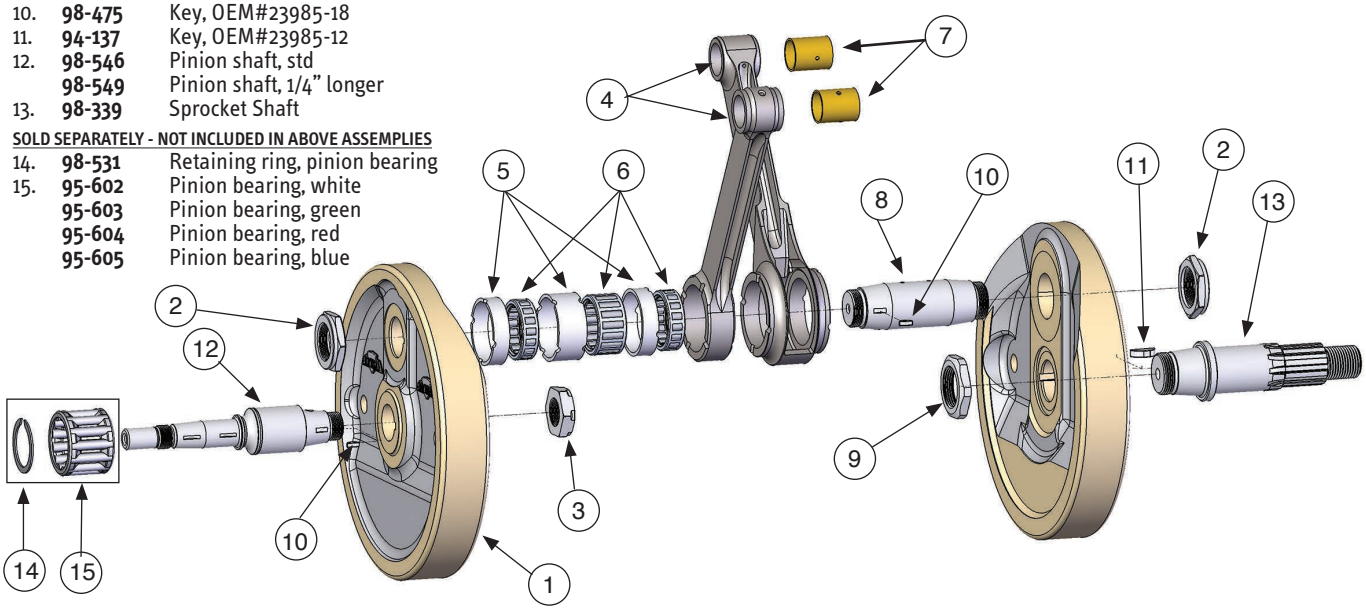

ULTIMA® 3-PIECE CRANKSHAFTS

Made exclusively for Ultima® big bore engines. These dynamically balanced crankshafts use lightweight racing H-Beam connecting rods making them an exceptional value. This is the core of your engine and can make or break your ride quality. These crankshafts have a 8.250" dia. counterweight. Replacement OEM piston kits are available for service sizes & do not require rebalance.

Rods are 7.700" with 0.927" pins.

98-559 4.000 stroke.
98-555 4.250 stroke, used in our Ultima® 120".
98-522 4.375 stroke, used in our Ultima® 124".
98-556 4.500 stroke, used in our Ultima® 127".
98-599 4.625 stroke, used to make a 131".

Rods are 8.000" with 0.927" pins.

98-579 4.250 stroke, used in our Ultima® 130".
98-557 4.625 stroke, used in our Ultima® 140".

Rods are 7.440" with 0.927" pins.

98-631 4.250 stroke used in our Ultima® 100/107".
98-521 4.500 stroke used in our Ultima® 113".
98-567 4.625 stroke, used to make a 117".



98-557

6

Custom balancing available. Contact your sales for details.

1. **Machined Wheels**
2. **98-548** Crank pin, 1.671" std dia
   98-598 Crank pin, +0.001 OS
3. **98-580** Rod set, 7.440 long, 0.927 pins
   98-574 Rod set, 7.670 long, 0.927 pins
   98-575 Rod set, 7.700 long, 0.927 pins
   98-578 Rod set, 8.00 long, 0.927 pins
4. **95-307** Roller bearing set
5. **95-147** Rod race set
6. **41-179A** Freeze plug
7. **98-601** External retaining ring
8. **95-144** Wrist pin insert
   95-148 Wrist pin insert +0.002 OS
9. **95-810** Inner pinion race - 1.500"
   95-811 Inner pinion race - 1.625"

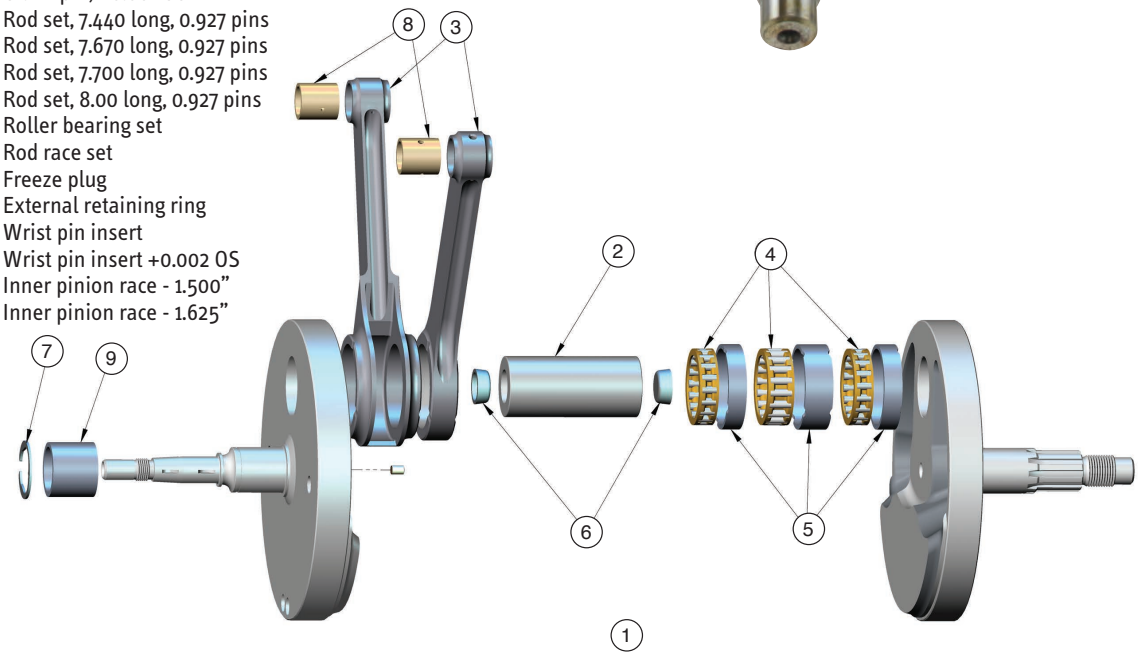

ULTIMA® TWIN CAM® REPLACEMENT CRANKSHAFT ASSEMBLY FOR UP TO 2006 & '07 AND LATER "A" MODEL ENGINES.

These crankshafts are dynamically balanced and feature H-beam connecting rods. They use the standard 7.67 twin cam rod.
NOTE: the H-beam rods used do NOT have the tapered wrist pin end.
Our sprocket shaft was independently lab tested at 40% stronger than a stock crankshaft. They are available in a variety of different strokes to cover any build you may have in mind. Custom balancing can be done upon request.



COMPETITION SERIES ULTIMA®

NEW!



For Twin Cam® "A" engines. The rods are 7.670" with 0.927" pins. 10 Spline Shaft for use up to 2006

98-597 4.00 stock stroke, 3.750 bore, 88 cid.
98-670 4.00 stock stroke, 3.875 bore, 95 cid.
98-568 4.375 stock stroke, 3.750 bore, 96 cid.
98-671 4.375 stock stroke, 3.875 bore, 103 cid.
98-672 4.375 stock stroke, 3.935 bore, 106 cid.
98-673 4.375 stock stroke, 4.00 bore, 110 cid.
98-674 4.375 stock stroke, 4.060 bore, 113 cid.
98-596 4.25 stroke for Twin Cam® "A" engines.
98-558 4.50 stroke, 4.0 bore, 113 Ultima.
98-569 4.625 stroke, 4.060 bore, 120 HD*.
98-635 No stroke, Pinion/Sprocket Halves**.

***Must use SE 7.575 rod set or stock TC rod length + .100 cylinders**

****No stroke hole fully machined wheel set - customer to machine stroke hole and drill oil feed hole.**

2007 and later Twin Cam "A" model crank assemblies.

98-690 4.00" stroke
98-691 4.25" stroke
98-692 4.375" stock stroke
98-693 4.50" stroke
98-694 4.625" stroke

ULTIMA® CYLINDERS & PISTONS



ULTIMA® TWIN CAM® CYLINDERS

	100"		113"	
BORE	3.875		4.000	
STROKE	4.250		4.500	
CYLINDER LENGTH	4.935		4.975	
COMPRESSION	10.5:1		10.9:1	
PISTON COMPRESSION HEIGHT	1.160		1.075	
CASE BORE	4.055		4.255	
BOLT PATTERN	Stk.		Stk.	
	FRONT	REAR	FRONT	REAR
SILVER FINISH CYLINDER ONLY	93-876	93-877	93-870	93-871
BLACK FINISH CYLINDER ONLY	93-878	93-879	93-872	93-873
POLISHED FINISH CYLINDER ONLY	93-66TC	93-67TC	93-52TC	93-53TC

ULTIMA® TWIN CAM® PISTONS

FOR TWIN CAM® 100 C.I.
Pistons set with pins, clips & rings

BORE	PART NO.	RINGS
3.875 (Std.)	92-500	INCLUDED
3.875 +.005	92-501	93-761
3.875 +.010	92-502	93-762
3.875 +.020	92-503	93-763
3.875 +.030	92-504	93-764

FOR TWIN CAM® 113 C.I.
Pistons set with pins, clips & rings

BORE	PART NO.	RINGS
4 (Std.)	93-965	INCLUDED
4 +.005	93-966	93-820
4 +.010	93-967	93-821
4 +.020	93-968	93-832
4 +.030	93-969	93-833

6

ULTIMA® 3.875", 4.000", 4.250" & 4.400" BORE PISTON ACCESSORIES

OVERSIZE PISTON PARTS	100"	107" 113"	120" 127"	100"/107"/113" 120" & 127"		130" 140"	130" & 140"	
	RINGS	RINGS	RINGS	PIN	CLIP	RINGS	PIN	CLIP
Std.	93-908	93-911	93-990	94-200	94-201	93-995	94-202	94-203
+.005	93-909	93-912	93-991	94-200	94-201	93-996	94-202	94-203
+.010	93-910	93-913	93-992	94-200	94-201	93-997	94-202	94-203
+.020	93-122	93-120	93-993	94-200	94-201	93-998	94-202	94-203
+.030	93-123	93-121	93-994	94-200	94-201	93-999	94-202	94-203

Case design change, summer 2013. Replacement parts for previous models found in Engine Big Book (located after sec. 6 in catalog) based on case code.

ULTIMA® REPLACEMENT HEADS FOR SHOVELHEAD

STOCK REPLACEMENT CYLINDER HEADS FOR 74",80 & 96" SHOVELHEAD

C356-T6 Casting. 1.940 stainless Int. Valves. 1.750 stainless Ex. Valves. Manganese Bronze guides. High Silicon Wire Valve Spring with black oxide steel retainers. Compression release valves. 3-bolt exhaust manifold flange for added strength & durability. Dual plug.

COMPLETE CYLINDER HEADS

93-114	Front Natural finish. 96" bore, complete.
93-115	Rear Natural finish. 96" bore, complete.
93-118*	Front Black finish. 96" bore, complete.
93-119*	Rear Black finish. 96" bore, complete.
93-110*	Front Polished finish. 96" bore, complete.
93-111*	Rear Polished finish. 96" bore, complete.
93-130	Front Natural finish. stock bore, complete.
93-131	Rear Natural finish. stock bore, complete.
93-132*	Front Black finish. stock bore, complete.
93-133*	Rear Black finish. stock bore, complete.



74"/80" HEADS

PATENT#
D608795
D608,372

ULTIMA® CYLINDERS & PISTONS



ULTIMA® 3.875", 4.000", 4.250" & 4.400" BORE BIG TWIN CYLINDERS

		100"	107"	113"	120"	127"	130"	140"
BORE		3.875	4.000	4.000	4.250	4.250	4.400	4.400
STROKE		4.250	4.250	4.500	4.250	4.500	4.250	4625
CYLINDER LENGTH		4.995	4.995	4.995	5.030	5.030	5.340	5.340
COMPRESSION		9.6:1 **NOTE 1**	10:1	10.2:1 **NOTE 1**	9.8:1	10.2:1	10.0:1	10.8:1
PISTON COMP. HEIGHT		1.325	1.325	1.200	1.200	1.075	1.385	1.200
CASE BORE		4.255	4.255	4.255	4.500	4.500	4.635	4.635
BOLT PATTERN		4.000	4.000	4.000	4.250	4.250	4.400	4.400
NATURAL FINISH	F	**93-860**	**93-858**	**93-858**	**93-934**	**93-934**	**93-948**	**93-948**
CYLINDER ONLY	R	**93-861**	**93-859**	**93-859**	**93-935**	**93-935**	**93-949**	**93-949**
BLACK FINISH	F	**93-864**	**93-862**	**93-862**	**93-936**	**93-936**	**93-950**	**93-950**
CYLINDER ONLY	R	**93-865**	**93-863**	**93-863**	**93-937**	**93-937**	**93-951**	**93-951**
POLISHED FINISH	F	**93-60**	**93-58**	**93-58**	**93-34**	**93-34**	**93-48**	**93-48**
CYLINDER ONLY	R	**93-61**	**93-59**	**93-59**	**93-35**	**93-35**	**93-49**	**93-49**

NOTE 1: This piston shape matches Ultima® cylinder heads. Chamber design & compression ratios are using Ultima® heads ONLY.

ULTIMA® 3.875", 4.000", 4.250" & 4.400" BORE BIG TWIN PISTONS

ULTIMA® 100 C.I.
Pistons set with rings; 9.6:1 ratio.

BORE	PART NO.
3.875 (Std.)	**93-185**
3.875 +.005	**93-186**
3.875 +.010	**93-187**
3.875 +.020	**93-188**
3.875 +.030	**93-189**

ULTIMA® 107 C.I.
Pistons set; 10:1 ratio.

BORE	PART NO.	RINGS
4 (Std.)	**93-180**	**INCLUDED**
4 +.005	**93-181**	**93-912**
4 +.010	**93-182**	**93-913**
4 +.020	**93-183**	**93-120**
4 +.030	**93-184**	**93-121**

ULTIMA® 113 C.I.
Pistons set; 10.2:1 ratio.

BORE	PART NO.	RINGS
4 (Std.)	**93-175**	**INCLUDED**
4 +.005	**93-176**	**93-912**
4 +.010	**93-177**	**93-913**
4 +.020	**93-178**	**93-120**
4 +.030	**93-179**	**93-121**

Case design change, summer 2013. Replacement parts for previous models found in Engine Big Book (located after sec. 6 in catalog) based on case code.

ULTIMA® 120 C.I.
Pistons set with rings; 9.8:1 ratio.

BORE	PART NO.
4.250 (Std.)	**93-970**
4.250 +.005	**93-971**
4.250 +.010	**93-972**
4.250 +.020	**93-973**
4.250 +.030	**93-974**

ULTIMA® 127 C.I.
Pistons set with rings; 10.2:1 ratio.

BORE	PART NO.
4.250 (Std.)	**93-975**
4.250 +.005	**93-976**
4.250 +.010	**93-977**
4.250 +.020	**93-978**
4.250 +.030	**93-979**

ULTIMA® 130 C.I.
Pistons set with rings; 10.0:1 ratio.

BORE	PART NO.
4.400 (Std.)	**93-980**
4.400 +.005	**93-981**
4.400 +.010	**93-982**
4.400 +.020	**93-983**
4.400 +.030	**93-984**

ULTIMA® 140 C.I.
Pistons set with rings; 10.8:1 ratio.

BORE	PART NO.
4.400 (Std.)	**93-985**
4.400 +.005	**93-986**
4.400 +.010	**93-987**
4.400 +.020	**93-988**
4.400 +.030	**93-989**

NOTE* PISTONS LISTED ON THIS PAGE COME WITH RINGS, CLIPS & 0.927" PINS. SEE NEXT PAGE FOR REPLACEMENT PISTON PARTS.

A. *ULTIMA® COMPLETE CYLINDER HEADS FOR 3.875", 4.000" & 4.250" BORE ENGINES*

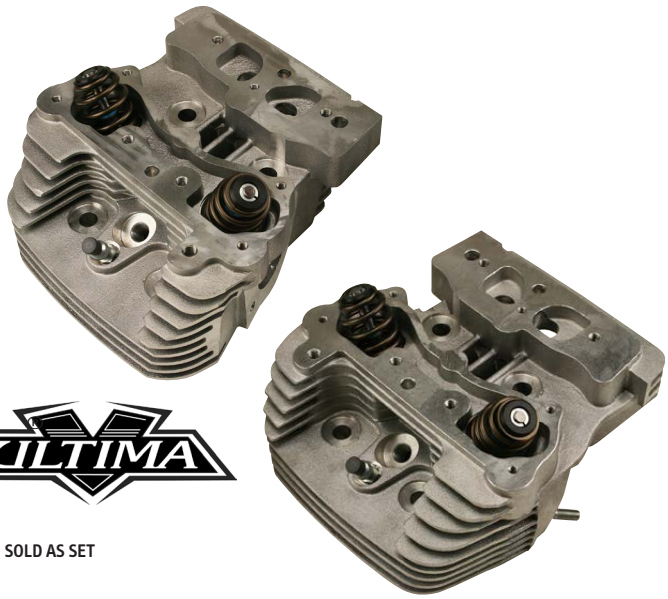

COMPLETE HEAD SETS

These cylinder heads offer builders great value and excellent performance. If you're trying to improve the performance of an older engine these heads will provide a great place to start.
Our heads feature:

- 30% More fin area for cooler running engines.
- Compression release valves included.
- Intake valve @ 25° angle.
- Exhaust valve @ 28° angle.
- High silicon valve springs with chromoly retainers.
- Manganese bronze guides.
- 14mm spark plug.
- Includes Valves, Springs, Collars, & Compression Release.

93-900 Complete Head Set 4" Bore Bolt Pattern. Natural Finish — SOLD AS SET
93-907 Complete Head Set 4" Bore Bolt Pattern. Black Finish.

COMPLETE ASSEMBLED CYLINDER HEADS	NATURAL FRONT	NATURAL REAR	BLACK FRONT	BLACK REAR	POLISHED FRONT	POLISHED REAR
4.000" Bore complete assembled heads.	**93-890**	**93-891**	**93-892**	**93-893**	**93-90**	**93-91**
4.250" Bore complete assembled heads.	**93-930**	**93-931**	**93-932**	**93-933**	**93-30**	**93-31**
4.400" Bore complete assembled heads.	**93-952**	**93-953**	**93-954**	**93-955**	**93-52**	**93-53**
BARE HEADS W/GUIDES AND SEATS	NATURAL FRONT	NATURAL REAR	BLACK FRONT	BLACK REAR	POLISHED FRONT	POLISHED REAR
4.000" Bore bare heads with guides & seats.	**93-890M**	**93-891M**	**93-892M**	**93-893M**	—	—
4.250" Bore bare heads with guides & seats.	**93-930M**	**93-931M**	**93-932M**	**93-933M**	—	—
4.400" Bore bare heads with guides & seats.	**93-952M**	**93-953M**	**93-954M**	**93-955M**	**93-952P**	**93-953P**

NOTE 1: Ultima® cylinder heads require a special length intake manifold which are approximately 0.175" shorter per leg than a stock length manifold. These heads also have a larger intake opening requiring a 1.780"- 1.820" I.D. manifold. Ultima® manifolds are available to fit with a S&S® 'G' pattern only and will fit both our 100 CI and 113 CI engines.
NOTE 2: On most stock Softail® frames these heads with their larger cooling fin area can interfere with the stock mounted coil and spacing may be required.
NOTE 3: These cylinder heads measure 3.812" tall and are approximately 0.062" thicker than a stock casting to correct valve train geometry.

B. *DOUBLE VALVE SPRING W/DAMPER KIT*

Listed below are the parts our kit includes:

PART NO.	DESCRIPTION	
91-746	Valve springs.	INDIVIDUAL PARTS ALSO AVAILABLE
91-745	Valve keys 10°.	
91-250	Lower valve collar.	
91-251	Upper valve collar 10°.	

91-758 Valve spring kit for Ultima® engine. — SOLD AS KIT


91-746

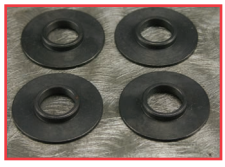
91-250


91-745


91-251

C. *BEEHIVE VALVE SPRING COMPONENTS & KIT*

PART NO.	DESCRIPTION	
91-861	Valve spring - std install ht, 1.850	SOLD EACH
91-862	Valve spring - HP, install ht, 1.800	SOLD EACH
91-339	Ultima® valve lock	SOLD AS PAIR
91-337	Spring seat.	SOLD EACH
91-338	Ultima® chromoly retainer.	SOLD EACH
91-340	Ultima® titanium retainer.	SOLD EACH
91-640	Standard Beehive Valve Spring Kit. Includes parts 91-861, 91-337, 91-338 & 91-339	SOLD AS KIT

91-338


91-861


91-337


ULTIMA® COMPLETE CYLINDER HEADS

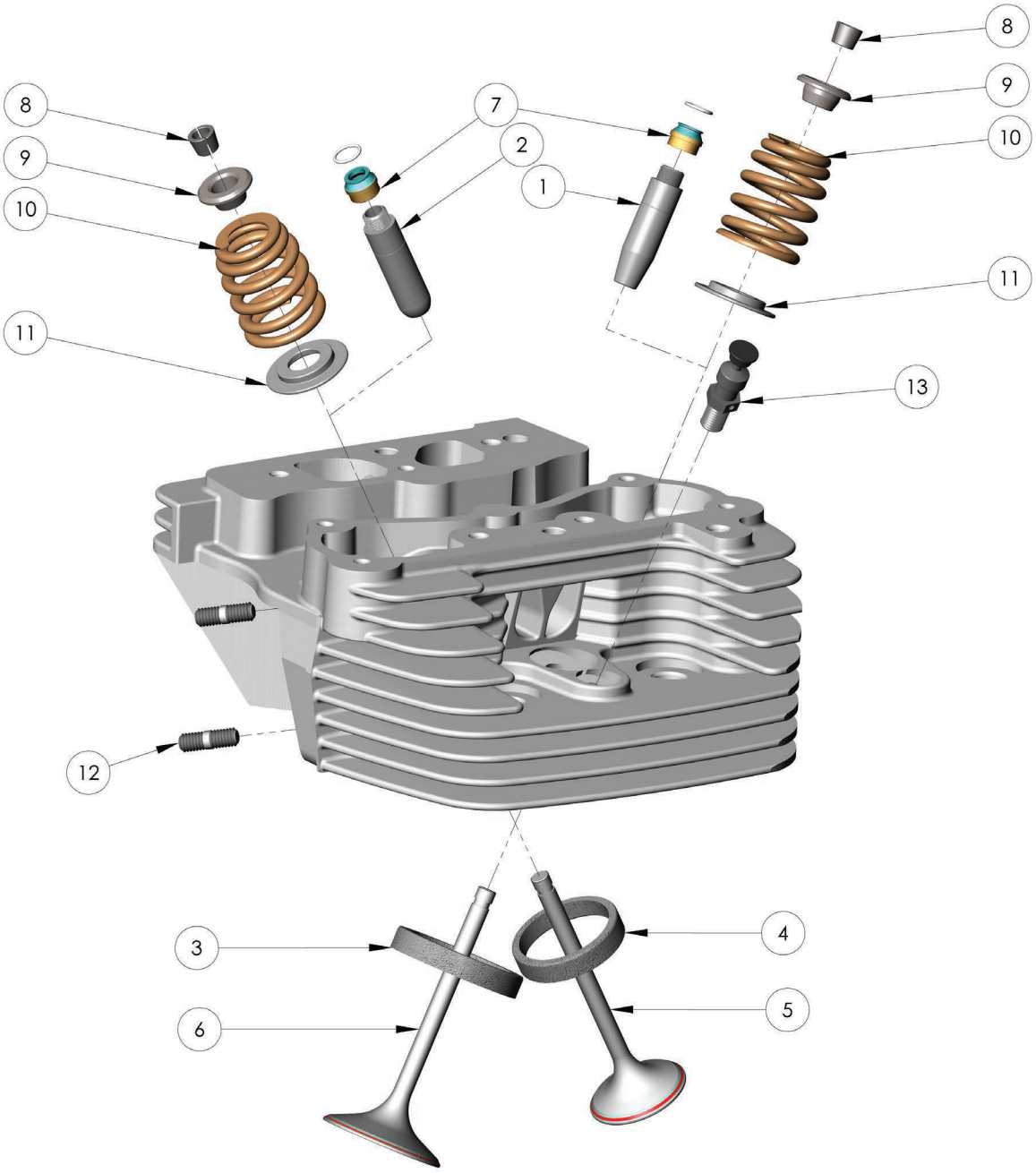

1. **91-780** Valve guide Ultima® std. int.
   91-782 Valve guide Ultima® +0.001 int.
   91-784 Valve guide Ultima® +0.002 int.
   91-790 Valve guide Ultima® +0.003 int.
   91-786 Valve guide Ultima® +0.004 int.
   91-788 Valve guide Ultima® +0.006 int.
2. **91-781** Valve guide Ultima® std. ex.
   91-783 Valve guide Ultima® +0.001 ex.
   91-785 Valve guide Ultima® +0.002 ex.
   91-791 Valve guide Ultima® +0.003 ex.
   91-787 Valve guide Ultima® +0.004 ex.
   91-789 Valve guide Ultima® +0.006 ex.
3. **91-569A** 2.250 x 1.815 Intake valve seat (2.100)
   91-567A 2.265 x 1.815 Intake valve seat (2.100)
   91-574 2.350 x 1.970 Intake valve seat (2.250)
   91-574A 2.3650 x 1.970 Intake valve seat (2.250)
   91-570A 2.450 x 2.075 Intake valve seat (2.300)
   91-575A 2.460 x 2.075 Intake valve seat (2.300)
4. **91-568A** 1.880 x 1.495 Exhaust valve seat (1.700)
   91-566A 1.895 x 1.495 Exhaust valve seat (1.700)
   91-571A 1.980 x 1.570 Exhaust valve seat (1.800)
   91-576A 1.990 x 1.570 Exhaust valve seat (1.800)
5. **91-748** Exhaust valve 1.700 x 4.620
   91-767 Exhaust valve 1.800 x 4.550
6. **91-747** Intake valve 2.100 x 4.580
   91-765 Intake valve 2.250 x 4.600
   91-766 Intake valve 2.300 x 4.600
7. **91-770** Seal, valve for V2 BT, XL, & TC-88
8. **91-339** Ultima® locks, 7 deg
9. **91-338** Retainer, steel
   91-340 Retainer, titanium
10. **91-861** Conical valve spring, standard
    91-862 Conical valve spring, high performance
11. **91-337** Spring seat
12. **66-242** Exhaust stud-HD 16715-83
13. **93-772** Compression release, 1-13/16 OAL

ULTIMA® DIE CAST ROCKER BOX



PATENT PENDING

89-538

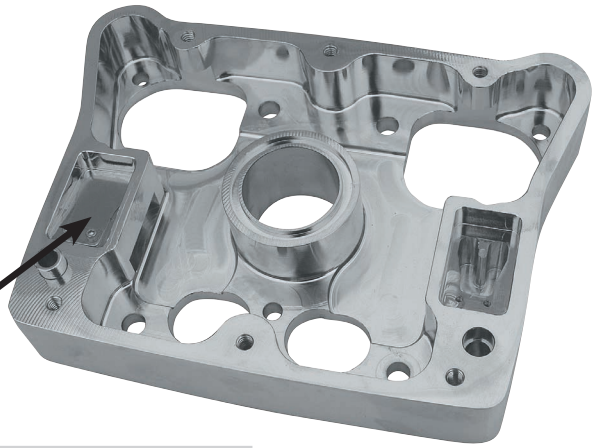

PVC REED ASSEMBLY

PATENT # US 6,883,505 BI

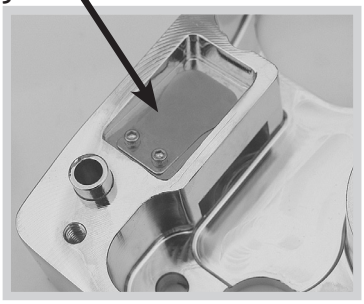

The Ultima® rocker box is the perfect way to set your engine apart from others. With a unique design and chrome plated aluminum, this box will enhance the look of any engine. The Ultima® box uses a patented reed assembly to vent all 1992 & later Evolution® engines. Unlike other designs that can degrade in performance with time, our reed assembly is made from fatigue-resistant stainless steel that will give you consistent, trouble-free performance for as long as you ride your bike.

Ultima® offers two versions of this box. The standard box offers classic looks with the versatility to fit on any stock Evolution® or custom engine. Our compression release box comes with all the features the standard box does, plus the added feature of being compatible with the S&S® electric compression release system. Both box sets come with all required mounting hardware and gaskets.

Fits 1992 thru 1999 Evolution® engines.

89-538	Compression release compatible Ultima® die cast rocker box set.	SOLD AS SET
77-109	Gasket kit for Ultima® (#89-516) rocker box, cast, old style, no center hole.	SOLD AS KIT
77-111	Gasket kit for Ultima® (#89-538) rocker box, cast, new style w/center hole.	SOLD AS KIT

NOTE: ABOVE BOXES SOLD AS SET OF TWO BOXES

ULTIMA® DIE CAST ROCKER BOX COMPONENT LIST

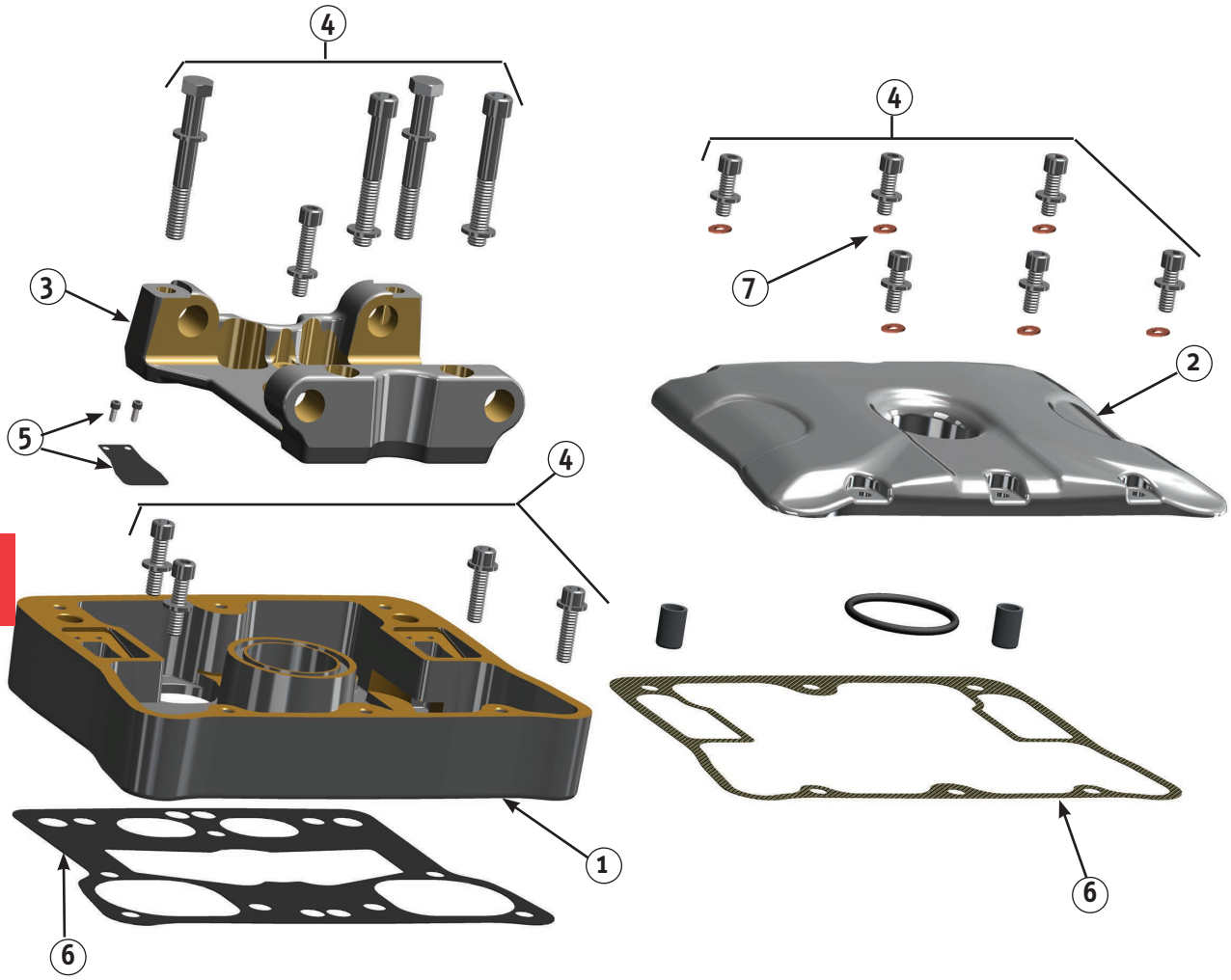

#	Description	Die-Cast Std (no center hole) 89-516	Die-Cast Comp Rel (w/center hole) 89-538
1	Base	89-540	89-543
2	Cover	89-541	89-544
3	Center Section	89-542	89-545
4	Hardware kit	89-519	89-519
5	Reed Valve Kit	89-518	89-518
6	Gasket Kit*	77-109	77-111
7	Crush Washer, each	89-436	89-436

*Gasket Kit 77-109 includes Base & Cover Gaskets. 77-108 & 77-111 includes Base & Cover Gaskets and Center O-Ring.

Recommended items not included in kits

91-699 Roller Rocker Arms
91-666 Rocker Arm Shaft (OEM 17611-83)

ULTIMA® 'STANDARD VOLUME' & 'HIGH OUTPUT' OIL PUMPS

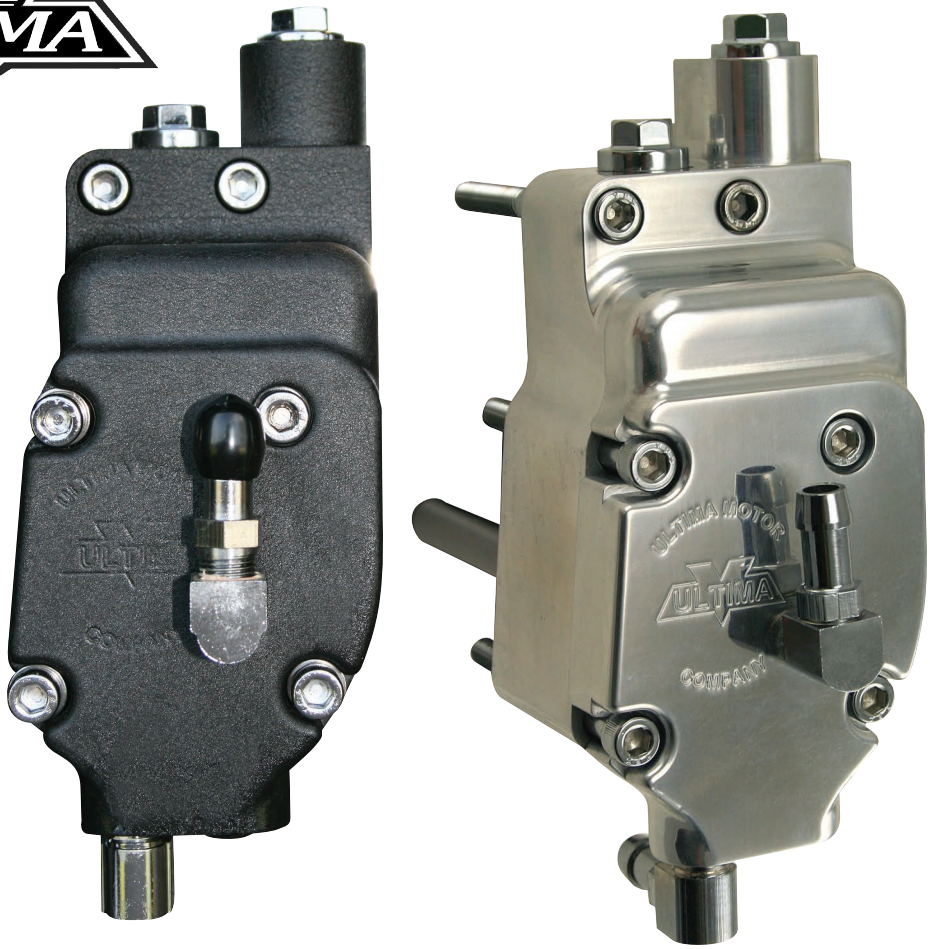

ULTIMA® OIL PUMPS

Ultima® now has its own line of oil pumps including the Ultima® Standard Volume (S.V.) Oil Pump, and the Ultima® High Output (H.O.) Oil Pump. Ultima®'s main focus on the development of the new oil pumps was consistency. Ultima® pumps are checked on a Coordinate Measuring Machine, and flow tested on a test stand to insure the oil pumps are consistent from one pump to the next, and the motor is getting adequate oil. Ultima®'s S.V. pump performs with similar characteristics of the stock pump for volume and pressure. The H.O. pump has a much greater potential for pressures and volume. Unlike stock oil pumps which won't start feeding the bottom end oil until 2000+ RPM, tests show the H.O. Pump will feed the bottom end at idle speeds, and keep a consistent flow throughout the R.P.M range to keep from floating bottom end bearings. Bottom line, you are getting a precise pump that you can be confident in. Check fitting for Baggers due to master cylinder.

98-515	92'- later Standard Volume Pump, polished.
98-516	84'-91' Standard Volume Pump, polished.
98-517	92'- later High Output Pump, polished.
98-518	84'-91' High Output Pump, polished.
98-519	84'-91' High Output Pump, wrinkle black.
98-520	92'- later High Output Pump, wrinkle black.

ULTIMA® 'HIGH OUTPUT' OIL PUMPS

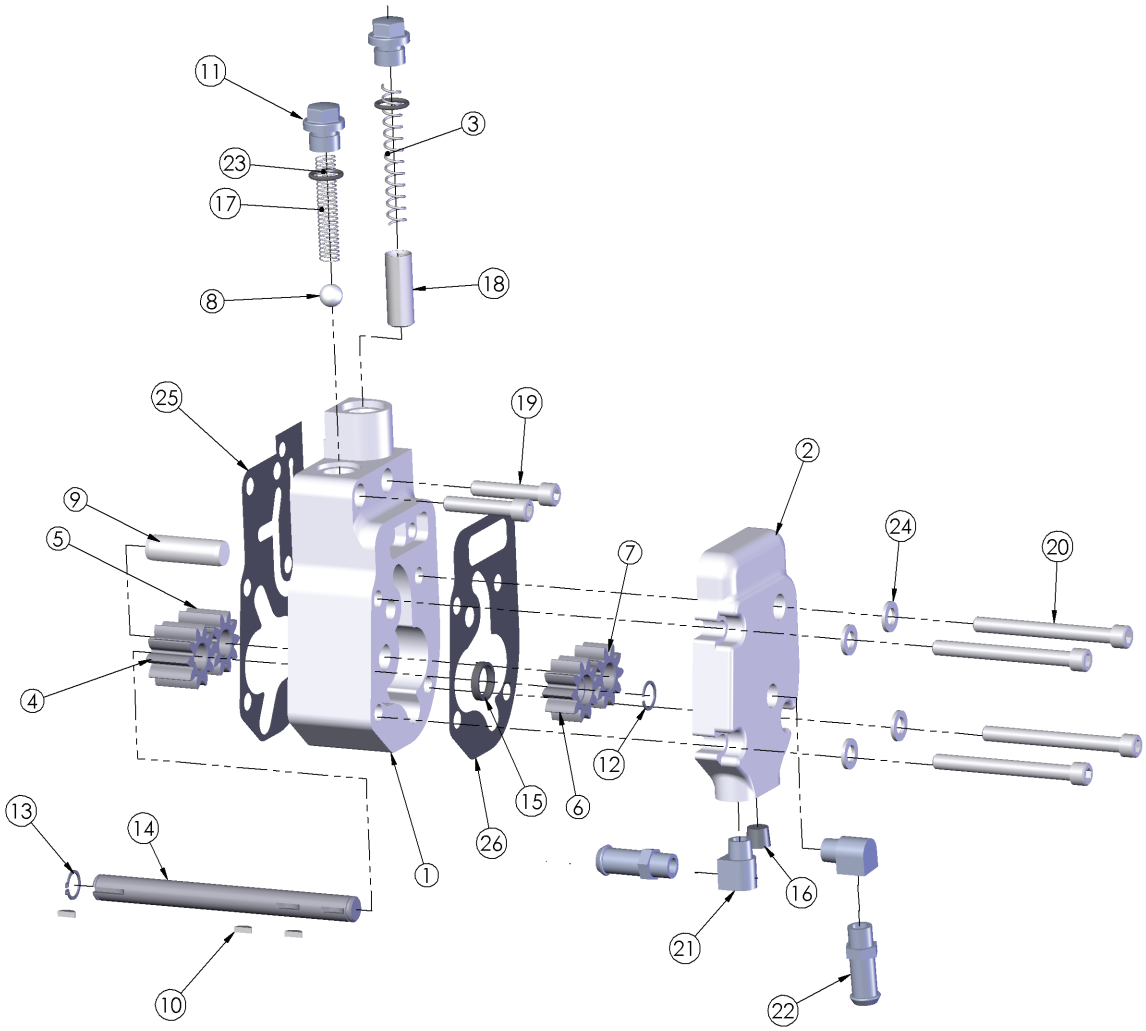

1	--------	PUMP BASE, 92' & LATER
	--------	PUMP BASE, 84'-91'
2	--------	PUMP COVER, 92' & LATER
	--------	PUMP COVER, 84'-91'
3	98-619	PLUNGER SPRING
4	98-604	RETURN DRIVE GEAR
5	98-605	RETURN IDLE GEAR
6	98-606	FEED DRIVE GEAR
7	98-607	FEED IDLE GEAR
8	98-617	CHECK BALL
9	98-618	IDLER PIN
10	98-272	KEY(3)
11	41-888	SPRING CAP(2)
12	98-325	SNAP RING
13	98-329	CLIP RING
14	98-334	DRIVE SHAFT
15	95-753	OIL SEAL
16	98-622	PRESSURE PLUG(2)
17	98-620	CHECK BALL SPRING
18	98-623	PLUNGER
19	*41-740	HARDWARE KIT (SHCS 0.25-20X1.25X1.25-N)
20	*41-740	HARDWARE KIT (SHCS 0.25-20X2.55X1-N)
21	21-185	SPIGOT ELBOW(2)
22	21-440	SPIGOT TUBE(2)
23	95-828	O-RING(2)
24	*41-740	HARDWARE KIT (FW 0.25(4))
25	98-625	BASE GASKET, 92' & LATER (SOLD EA.)
	98-628	BASE GASKET, 84'-91' (SOLD EA.)
26	98-627	COVER GASKET, 92' & LATER (SOLD EA.)
	98-626	COVER GASKET, 84'-91' (SOLD EA.)

NOTE* ONLY 1 HARDWARE KIT (#41-740) IS NEEDED PER OIL PUMP.

ULTIMA® 'STANDARD VOLUME' OIL PUMPS

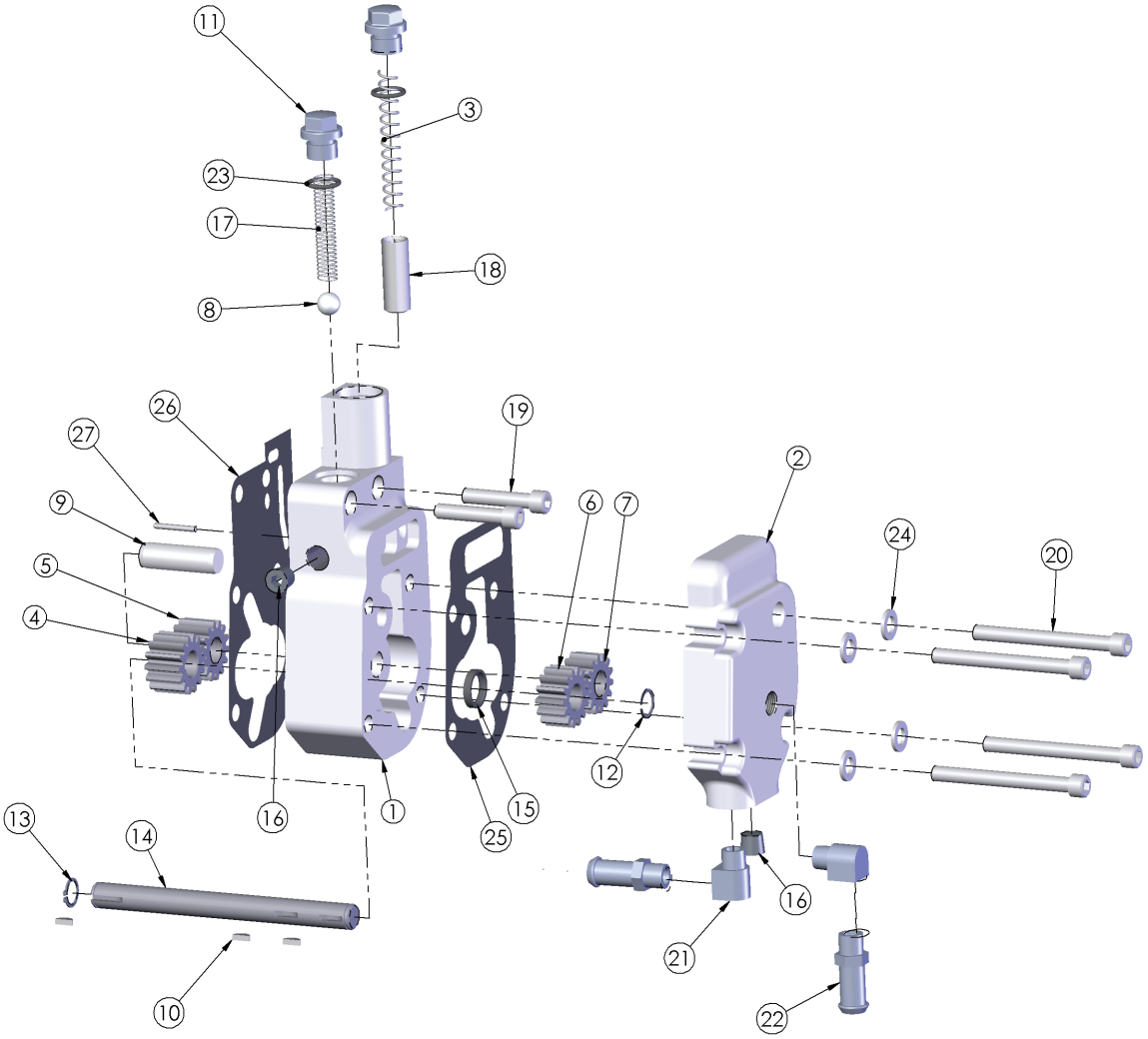

1	--------	PUMP BASE, 92' & LATER
	--------	PUMP BASE, 84'-91'
2	98-611	PUMP COVER, 92' & LATER
	--------	PUMP COVER, 84'-91'
3	98-619	PLUNGER SPRING
4	98-613	SUMP DRIVE GEAR
5	98-614	SUMP IDLE GEAR
6	98-615	FEED DRIVE GEAR
7	98-616	FEED IDLE GEAR
8	98-617	CHECK BALL
9	98-618	IDLER PIN
10	98-272	KEY(3)
11	41-888	SPRING CAP(2)
12	98-325	SNAP RING
13	98-329	CLIP RING
14	98-334	DRIVE SHAFT
15	95-753	OIL SEAL
16	98-622	PRESSURE PLUG(2)
17	98-620	CHECK BALL SPRING
18	98-623	PLUNGER
19	41-740	HARDWARE KIT (SHCS 0.25-20X1.25X1.25-N)
20	41-740	HARDWARE KIT (SHCS 0.25-20X2.55X1-N)
21	21-185	SPIGOT ELBOW(2)
22	21-440	SPIGOT TUBE(2)
23	95-828	O-RING(2)
24	41-740	HARDWARE KIT (FW 0.25(4))
25	78-398	COVER GASKET, 92' & LATER (Pkg of 10)
	78-398A	COVER GASKET, 92' & LATER (Sold ea.)
	78-397	COVER GASKET, 84'-91' (Pkg of 10)
	78-397A	COVER GASKET, 84'-91' (Sold ea.)
26	78-396	BASE GASKET, 92' & LATER (Pkg of 10)
	78-396A	BASE GASKET, 92' & LATER (Sold ea.)
	78-395	BASE GASKET, 84'-91' (Pkg of 10)
	78-395A	BASE GASKET, 84'-91' (Sold ea.)
27	98-624	CHECK BALL RETAINING PIN

NOTE* ONLY 1 HARDWARE KIT (#41-740) IS NEEDED PER OIL PUMP.

Ultima® '99-'06 Twin Cam®
Hydraulic Chain Tensioner Conversion Parts

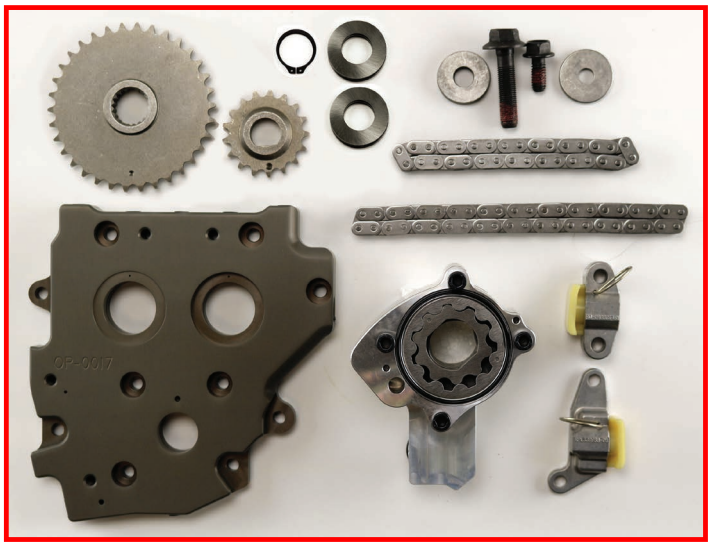

A

6

Got an early model Twin Cam® due for new chain tensioners or want to upgrade and have peace of mind? Midwest now offers a full line of parts to do the hydraulic chain tensioner conversion. With this line up of parts the conversion is a breeze. Simply order the components listed below and choose the camshafts to suit your bike and riding style. Midwest carries a wide variety of Andrews conversion camshafts to cover your needs. These quality components at a great price are just what you need to stay on the road and out of the shop.

* A conversion style camshaft must be used with the listed components

98-251	Primary Chain	**98-508**	Cam Plate '07-'12
98-282	Secondary Chain	**98-710**	Thrust Washer .100"
98-297	Sprocket Hardware	**98-711**	Thrust Washer .110"
98-281	Crank Sprocket	**98-296**	Snap Ring
98-250	Cam Sprocket	**41-336**	Hydraulic chain tensioner hardware kit, 2007-Later TC.
98-502	Hydraulic Tensioners	**41-337**	Cam support plate hardware kit, TC
98-507	Oil Pump '07-'12		

B



98-504

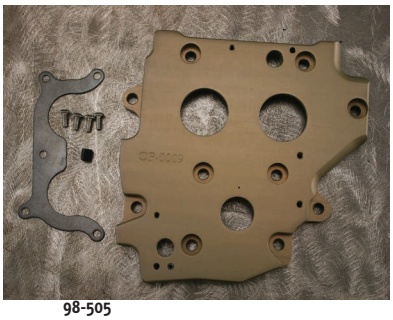

98-505



98-507



98-508

B. *OIL PUMPS & PARTS FOR TWIN CAM®*

Billet oil pump for Twin Cam®. Made from billet aluminum, 40% increase in feed volume & 60% increase in scavenging volume. Comes complete with all necessary hardware and gaskets included. SOLD EACH

98-504	Twin Cam 88™ high flow oil pump, 1999-2006. OEM 26035-99A.
98-505	Twin Cam® oil pump gear drive backing plate.
98-506	Tensioner pins & guide tower. Adapts #98-505 to chain drive system. Fits 1999-06 Twin Cams®, except '06 Dyna®.
98-502*	Stock replacement hydraulic cam chain tensioner. Replaces OEM 39968-06 & 39969-06 SOLD AS SET
98-507	Twin Cam® high flow oil pump, 2007-2012. OEM 26037-06.
98-508	Twin Cam® oil pump backing plate, 2007-2012.
41-336*	Hydraulic chain tensioner hardware kit, 2007-Later TC.
41-337*	Cam support plate hardware kit, TC.



98-506



98-502

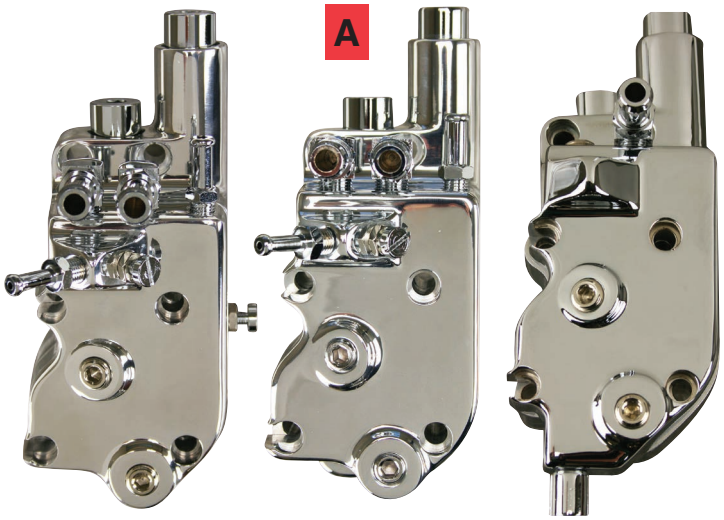

98-643 98-641 98-645

A. *OIL PUMPS FOR BIG TWIN*

Forged chrome or polished oil pumps for Big Twin. Comes complete with all necessary hardware and gaskets included.

SOLD EACH

98-640	Big Twin oil pump 1936-1972, polished.
98-641	Big Twin oil pump 1973-1991, polished.
98-642	Big Twin oil pump 1992-2000, polished.
98-643	Big Twin oil pump 1936-1972, chrome.
98-644	Big Twin oil pump 1973-1991, chrome.
98-645	Big Twin oil pump 1992-2000, chrome.

GASKET KITS FOR OIL PUMPS

78-4	For the following pumps: 98-640, 98-642, 98- 643 & 98-644
78-5	For the following pumps: 98-642 & 98-645

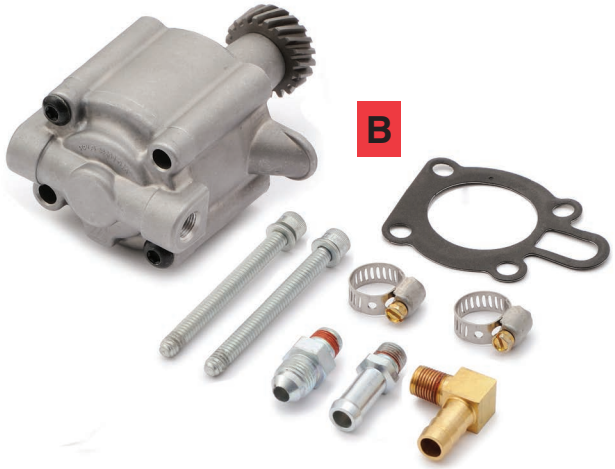

B. *HI VOLUME OIL PUMP FOR '91-'17 XL*

98-675 High volume oil pump for 1991-2017 XL.



93-421 41-766 41-111 CHROME PLATED

C. *HEAD BOLT KITS*

These head bolt, head nut, and washer kits are the highest quality available. They are accurately machined from high strength steel and hardened to original H-D® specification to prevent stretching. All bolts feature rolled threads for superior strength and fit. All bolts, nuts, and washers are plated for corrosion resistance and clean appearance.

SOLD AS SET

93-421	For Pan & Shovel, 1948 thru 1984 with washers. Cad plated.
41-987	For Pan & Shovel, 1948 thru 1984 with washers. Chrome plated.
41-766	12 Point head bolt & washer kit for big bore Pan & Shovel, 1948 & later.
41-398	Heat treated head bolt washers fit all H-D® except aluminum flathead models. Cad plated.
41-110	For Big Twin 1985 thru 1991 and XL 1986 thru 1992. OEM 16480-85A & 16478-85A. Twelve point style. Polished & chrome plated.
41-111	For Big Twin 1992 & later and XL 1993 & later. OEM 16480-92 & 16478-85A. Polished.
41-112	For Big Twin & XL, 1984 thru 1991. OEM 16482-85. Chrome plated. washers. SOLD AS KIT

A. *HEAD BOLT COVERS*

Set of 4 chrome plated head bolt covers with set screws. SOLD AS SET

41-906 Acorn. Fits Evolution® models late 1985 & later. Colony.
41-908 Cap nut. Fits Evolution® models late 1985 & later. Colony.



41-908 41-906

A

COLONY

B. *HEAD BOLT COVERS FOR EVOLUTION®*

Chrome die cast covers for the head bolt and spark plugs which are held in place by a hi-temperature rubber grommet.

89-402 For Evolution® Big Twin 1986 & later. SOLD AS SET



B

C. *POP-OFF COMPRESSION RELEASE*

Too much compression to easily start that beast? Here's the answer! Allows motor to spin easily — once it fires, the release pops off. 10mm x 1.0 Pitch. Push in cap, start motor. Once the motor starts, the compression release automatically pops off.

93-772 1-13/16" O.A.L. Has delayed pop-off rate for large displacement motors. SOLD EACH

C



ZINC PLATED

6

D. *DIE CAST ROCKER COVER SET*

Die cast rocker covers give the custom looks of the high priced models without the expense. Unique breather valve flap is built into the O-ring that seals top and bottom covers for 1993 & later models. Internal rocker arm clearance accepts cams to .800" Set includes top & bottom covers, rocker shaft bases, gaskets, O-rings and hardware. Show chrome finish.

89-496 Use on Big Twin & Sportster® V2 models. SOLD AS SET
77-443 Gasket set for above rocker cover set part No. **89-496**. Includes two kits. SOLD AS KIT
89-436 Copper crush washers SOLD EACH



CHROME PLATED

D

E. *TWIN CAM® ROCKER BOXES*

Die cast two-piece aluminum rocker box kit. Includes top cover, lower cover, inner rocker arm carrier, gaskets & hardware. Fits Twin Cam® models 1999-up. SOLD AS KIT

89-335 Chrome rocker box kit.
89-336 Polished rocker box kit.
77-446 Replacement gasket kit for **89-335** & **89-336**.



E 89-335

F. *SPORTSTER® OEM STYLE INDIVIDUAL ROCKER BOX SET*

Chrome OEM style individual rocker box sets. Include gaskets and hardware. MUST ORDER TWO SETS PER MOTOR.

SOLD AS SET

89-332 Chrome rocker boxes, fits XL models 1991-2003.
89-331 Chrome rocker boxes, fits XL models 2004-2006.
89-330 Chrome rocker boxes, fits XL models 2007-up.

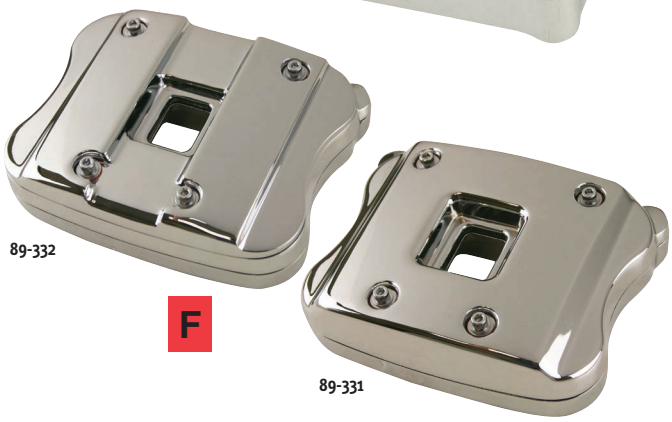

89-332

F

89-331



A

A. *ROCKER ARM COVERS FOR ALL SHOVEL*

With the use of included stud spacers, these covers can be used on both 1966 thru 1981 and 1982 & later models. Replaces OEM 17516-77B, 17517-77B, 17518-80, 17519-80, 17550-80 and 17552-80.

89-344 Chrome plated rocker arm covers and pair of chrome plated stud spacers. **SOLD AS SET**

89-389 Polished rocker arm covers.

Hardware kit includes 18 hex nuts & 18 flat washers. Replaces OEM 7753 and 6016.

40-318 Colony kit. Chrome plated. **SOLD AS KIT**

B. *KNUCKLE NUT SET*

Duplicate of original Harley® parts except for the addition of a positive O-ring seal to prevent oil leakage. 4 Nuts & seals.

41-349 For 1936 thru 1947. **SOLD AS SET**



B



C

RED CAP NUTS WITH CHROME PLATED STEEL

C. *ROCKER SHAFT NUTS*

Replaces stock OEM 7872 plastic cap nut. The plastic part of the nut is red and the steel is chrome plated. 7/16 - 20.

41-420 Red cap nut **SOLD AS PKG. OF FOUR**

D. *ROCKER SHAFT CAP NUT & WASHER*

This item replaces the stock red-dot nuts, eliminates the chance of the "red plastic" breaking or cracking off.

41-418 Left side of rocker shafts, 4 nuts & 4 washers. OEM 7872. For Shovel & Sportster®, all years. **SOLD AS SET**

41-896 O-ring side of rocker box. For Shovel 1971 & later and Sportster® 1971 thru 1984.

D



41-418



41-896

CHROME PLATED

A. *ROLLER ROCKER ARMS FOR EVOLUTION,® TWIN CAM® & ULTIMA® ENGINES*

Made from 4140 steel forgings, our new rocker arms are the strongest on the market today. These new arms incorporate a 1.675 ratio for increased lift and will match our Ultima® heads perfectly. A best value product. Uses OE rocker shafts. SOLD AS SET of FOUR

91-699 Fits Ultima® engines & 1984-later Evolution® Big Twin & XL engines. Also fits 1999-later Twin Cam® engines. 1.675 ratio.

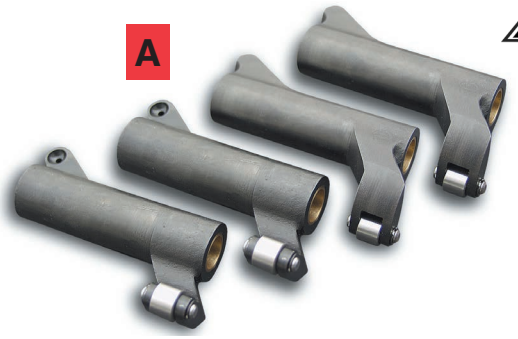

B. *.500" LIFT KIT FOR SPORTSTER® EXCEPT EVOLUTION®*

This .500 Lift Kit for Sportster® (except Evolution®) features stock o.d. springs, interference fit to reduce harmonics and control spring surge. No machining required for installation. Springs have 20% more pressure than stock. Use with stock lift cams and high lift cams to .500.

Combined loads: 90 @ 1.310; 300 @ .810. Coil bind: .750. Recommended cam lift: stock to .500.

91-223 .500 Lift kit for Sportster® (except Evolution®) with top collars and valve keys. Use your stock lower collars.



C. *VALVE SPRING KIT FOR EARLY MODEL ULTIMA® ENGINES*

The same high quality spring kits used in our Ultima® engines, these kits feature chromoly collars and spring seats, 10° locks and high silicone wire springs.

Installed height:	1.850 @ 160lb.	1.150 @ 400lb.
Coil bind:	1.050	
Max recommended lift:	.700	
Spring O.D.	1.460	

91-758 Valve spring kit for Ultima® engine. SOLD AS KIT



91-758

D. BEEHIVE *VALVE SPRING COMPONENTS FOR LATE MODEL ULTIMA® ENGINES*

PART NO.	DESCRIPTION	
91-861	Valve spring - std install ht, 1.850	SOLD EACH
91-862	Valve spring - HP, install ht, 1.800	SOLD EACH
91-339	Ultima® valve lock	SOLD AS PAIR
91-337	Spring seat.	SOLD EACH
91-338	Ultima® chromoly retainer.	SOLD EACH
91-340	Ultima® titanium retainer.	SOLD EACH



91-338



91-861



91-337

E. *ANDREWS VALVE SPRINGS & UPPER COLLARS FOR EVOLUTION®, TWIN 88, BIG TWIN & SPORTSTER®*

High lift springs for Evolution® engines, Twin 88, Big Twin & Sportster®. Can easily accommodate cam lifts of .550+. Installation does not require machining of heads.

91-537 Four inner and four outer valve springs. (collars not included) SOLD AS KIT



F. *TWIN CAM® & XL® VALVE KEY LOCK SET*

High grade steel construction.
For 05-16 88"/96"/103" Big Twin, 04-16 XL models.

98-730 Valve lock key set. OEM 18260-02. Sold as set of 4.



Sold as Set of 4

A



A. *LOWER COLLARS*

Manley lower collars are not just cheap knock-offs of stock pieces but re-engineered to offer installation advantages and years of trouble-free service. Manufactured of specially heat treated chrome moly material and black oxided, Manley lower collars complement H-D® OEM, many aftermarket and Manley spring kits perfectly.

91-655 For 1957 thru early 1983 Sportster®. Stock spring travel. SOLD AS SET OF4

91-656 For 1957 thru early 1983 Sportster®. +.060 Spring travel.

91-657 For 1948 thru early 1979 Pan/Shovel. Stock spring travel.

B



B. *VALVE COLLARS*

Machined from premium aluminum alloy for lightness & strength. Pent roof design. Includes 4 collars.

91-269 For H-D® 74" & 80". Utilizes stock keepers. SOLD AS SET

C



91-363

C. *ANDREWS VALVE SPRINGS, UPPER & LOWER COLLARS FOR 74" & 80" SHOVEL*

Andrews' springs & collars are designed for easy installation and maximum reliability.

High lift springs will provide correct spring force for any of Andrews' performance cams. Installation does not require complicated machining.

91-363 Four high lift valve springs. SOLD AS SET



91-540



91-538

These high lift upper spring collars, for use with high lift springs above, can easily accommodate cams with .600 lift. Made from T6 aluminum, collars are light weight, hard coated and very strong.

91-538 Four high lift upper spring collars. SOLD AS KIT

These medium lift upper spring collars are intended for stock and will add approximately .060" spring travel with no other modifications. This is the easy way to install Andrews' B or No. 2 cams with stock Shovel heads.

91-539 Four medium lift upper collars. SOLD AS KIT

Low profile lower spring collars are similar to stock 1980 style parts but are lower profile for easier installation of higher lift cams. They are required parts if you are using 1980 style valve guides which utilize "K" line stem seals. Material is heat treated steel.

91-540 Four low profile lower collars. SOLD AS KIT

6

BLACK DIAMOND™ VALVES FOR TWIN CAM®

Kibblewhite Precision Machining Black Diamond™
Valves increase the life and performance of your cylinder head.

91-950 Valve, Intake 99-04 TC 88", 46.74mm / 1.840" Head dia.
91-951 Valve, Exhaust 99-04 TC 88", 39.75mm / 1.565" Head dia.
91-952 Valve, Intake 2005 TC 88", 45.85mm / 1.805" Head dia.
91-953 Valve, Exhaust 2005 TC 88", 40.00mm / 1.575" Head dia.
91-954 Valve, Intake 05-14 TC, 0.2810 Fat Stem
91-955 Valve, Exhaust 05-14 TC, 0.2805 Fat Stem





ALL VALVES SOLD EACH

BLACK DIAMOND® VALVES

MODEL	YEAR	NO.	PART TYPE	DIA.	HEAD DIA.	STEM OEM NO.
Shovel	1966/1984	**91-700**	Intake.	1.950"	.3765	18074-66
Shovel	1966/1984	**91-701**	Exhaust.	1.750"	.3747	18082-57
Evolution® 1340cc 80"	1984 & later	**91-702**	Intake.	1.84"	.310	18074-83A
Evolution® 1340cc 80"	1984 & later	**91-703**	Intake, o.s.	1.94"	.310	N/A
Evolution® 1340cc 80"	1984 & later	**91-704**	Exhaust.	1.615"	.3096	18082-83
Evolution® 1340cc 80"	1984 & later	**91-705**	Intake.	2.000"	.310	

NOTE: Extra long stem and o.s. head.

A. *VALVE GUIDE SEALS*

A



91-770



91-899

These valve guide seals are the latest in modern engine technology. Fluoro-viton seals feature a garter spring on the sealing lip for continuous positive sealing of the valve stem area. These are the same parts used in our Ultima® built motors. These seals don't just wipe the stem, they seal it. Nothing but the best!

91-770	Use on all V2 Big Twin & XL, and Twin Cam 88™. .310 x .420 Seal cut to .420	SOLD EACH
91-771	Use on 1979 thru 1984 Shovel. .375 x .625 Seal cut to .625	
91-899	Metal style seal for use on '79 - '84 Shovelhead. .675 guide OD, .375 stem OD	

B. *AMPCO 45 VALVE GUIDES*

B



	INTAKE	SIZE	EXHAUST
74" 1948/1979	**91-706**	Std.	**91-724**
	91-374	.002	**91-380**
	91-376	.004	**91-382**
	91-709	.006	**91-383**
	91-710	.025	**91-728**

	INTAKE	SIZE	EXHAUST
80" 1980/1984	**91-355**	Std.	**91-729**
	91-712	.002	**91-730**
	91-713	.004	**91-386**
	91-714	.006	**91-741**
	91-715	.025	**91-732**

ALL VALVE GUIDES SOLD EACH

6

D. *PRECISION MACHINING CAST IRON VALVE GUIDES FOR EVOLUTION®*

D



	INTAKE	SIZE	EXHAUST
Evolution® Big Twin & Sportster®	**91-716**	Std.	**91-733**
	91-717	.001	**91-734**
	91-718	.002	**91-735**
	91-719	.003	**91-736**
	91-720	.004	**91-737**
	91-723	.010	**91-740**

ALL VALVE GUIDES SOLD EACH

E. *ULTIMA COMPLETE PUSHROD TUBE KITS CHROME & BLACK FOR EVO & TC®*





E





Complete pushrod cover kits include all components needed for one engine.

91-980	Pushrod cover kit, Evo '84-'99, Chrome
91-981	Pushrod cover kit, Evo '84-'99, Black
91-982	Pushrod cover kit, Twin Cam® '00-Later, chrome
91-983	Pushrod cover kit, Twin Cam® '00-Later, black

VALVE GUIDES

ALL VALVE GUIDES SOLD EACH

Each part is "hand-honed" to finished inside diameter and inspected . Outside diameter is ground "between centers" which insures concentricity. Each part is clearly identified to facilitate customer storage, disbursement, and usage.

BRONZE - NICKEL - ALUMINUM - AMPCO 45

	INTAKE	SIZE	EXHAUST
74" 1948 Thru 1979	**91-372**	Std.	**91-378**
	91-373	.001	**91-379**
	91-374	.002	**91-380**
	91-375	.003	**91-381**
	91-376	.004	**91-382**
	91-377	.006	**91-383**

	INTAKE	SIZE	EXHAUST
80" 1979 Thru 1984	**91-355**	Std.	**91-356**
	91-234	.001	**91-237**
	91-357	.002	**91-358**
	91-384	.004	**91-386**
	91-385	.006	**91-387**

INTAKE / EXHAUST

	SAME	SIZE
V-2 Evolution® Engine	**91-388**	Std.
	91-389	.001
	91-390	.002

	INTAKE	SIZE	EXHAUST
Sportster® 1957 Thru 1982	**91-393**	Std.	**91-397**
	91-395	.001.	**91-399**
	91-394	.002	**91-398**

	INTAKE	SIZE	EXHAUST
Sportster® 1983 Thru 1985	**91-404**	.003	**91-408**

CAST IRON

INTAKE / EXHAUST

	SAME	SIZE
45" Flathead 1932 Thru 1972	**91-490**	Std.

	INTAKE	SIZE	EXHAUST
61" & 74" Knuckle 1936 Thru 1947	**91-481**	Std.	**91-485**
	91-482	.002	**91-486**

	INTAKE	SIZE	EXHAUST
Sportster® 1957 Thru 1982	**91-430**	Std.	**91-436**
	91-431	.001	**91-437**
	91-432	.002	**91-438**

	INTAKE	SIZE	EXHAUST
61" & 74" OHV 1948 thru 1979	**91-442**	Std.	**91-449**
	91-443	.002	**91-450**
	91-444	.004	**91-451**
	91-445	.006	**91-452**

	INTAKE	SIZE	EXHAUST
80" OHV 1979 Thru 1984	**91-459**	.006	**91-466**

	INTAKE/ EXHAUST	SIZE
80" Evolution® Big Twin, Evolution®	**91-471**	Std.
	91-472	.001
	91-473	.002

6

A. ULTIMA® ADJUSTABLE PUSHROD KITS FOR EVO® & TWIN CAM®

These heavy duty American made adjustable pushrod kits contain everything you need for immediate installation. SOLD AS KIT

91-995 Chrome Adjustable pushrod kit for Big Twin Evolution® engines. **U.S.A. MADE.**

91-996 Chrome Adjustable pushrod kit for Twin Cam® 88-113 C.I. engines. **U.S.A. MADE.**

91-992 Black Adjustable pushrod kit for Big Twin Evolution® engines. **U.S.A. MADE.**

91-993 Black Adjustable pushrod kit for Twin Cam® 88-113 C.I. engines. **U.S.A. MADE.**

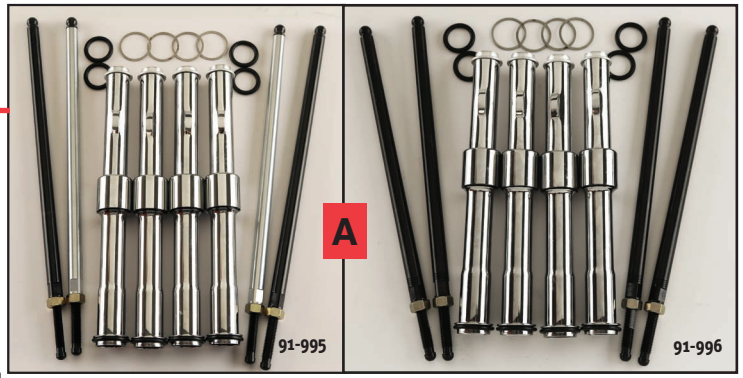



A



COLONY

CHROME PLATED



B

PLAIN METAL

C



PLAIN STYLE

COLONY

D



E



91-997



91-998



91-999

COLONY

A. *REPLACEMENT UPPER PUSHROD COVER KITS (OUTER)*

Each kit contains 4 chrome plated retaining clips, 4 chrome plated cups, 4 springs, 4 cork gaskets, and 4 steel washers. These are exact duplicates of the H-D® part.

89-63 For Knuckle 1936 thru 1939 (2" long clips). SOLD AS SET
89-61 For Sportster® 1957 thru 1985 and Pan 1948 thru 1965 (2-3/8" long clips).
89-62 For 1940 thru 1947 Knuckle, all Shovel & Evolution® (3-5/16" long clips).
89-76 For 1999 & later Twin Cam 88™.

B. *REPLACEMENT UPPER PUSHROD COVER KITS (INNER)*

Shovel (longest length) inner pushrod covers.

91-512 For all O.H.V. Big Twin 1936 thru early 1979, and Sportster® 1957 thru 1985. SOLD AS KIT
91-634 For Shovel late 1979 & later, and Big Twin Evolution® 1984 thru 1999.
89-75 For 1999 & later Twin Cam 88™.

C. *CHROME PLATED CUSTOM LOWER PUSHROD COVER KITS*

Plain OEM style with necessary corks.

89-135 For Knuckle 1940 thru 1947 SOLD AS SET
89-133 For Sportster® 1957 thru 1985.
89-134 For Pan & Shovel, 1948 thru early 1979.
NOTE: Will fit late 1979 thru 1983 by using part No. **91-512** upper inners.
89-365 For Big Twin Evolution® 1984 thru 1999.

Grooved style with necessary corks.

89-60 For Sportster® 1957 thru 1985. SOLD AS KIT
89-59 For Pan & Shovel, 1948 & later.

D. *ADJUSTABLE PUSHROD COVER KIT*

Lower pushrod covers and upper clips used for adjustable pushrods in Twin Cam® motors. Requires the use of OEM springs, retainers and washers.

89-113 Twin Cam® pushrod covers. SOLD AS KIT

E. *COMPLETE PUSHROD COVER KITS*

Complete pushrod cover kits include all components needed for one engine.

91-997 Pushrod cover kit, Evo SOLD AS KIT
91-998 Pushrod cover kit, Twin Cam® OEM style. SOLD AS KIT
91-999 Pushrod cover kit, Twin Cam® quick change. SOLD AS KIT

A. *EVOLUTION® PUSHROD TUBE KIT*

91-775 Complete pushrod cover kit for one pushrod only. Fits 1984-up EVO's. Each kit contains all parts necessary to replace one entire pushrod cover. Four kits needed for an entire motor. SOLD AS KIT

A



B. *ULTIMA® ADJUSTABLE SPEEDRODS™ FOR EVO®, TWIN CAM® & SHOVELHEAD ENGINES*

Ultima® adjustable pushrods allow you to install the pushrods without removing the rockerboxes. Starting point 3 full turns pass 0 lash. All Ultima® brand pushrods are made from tapered 4140 Steel with adjusters and tips made from hardened 8620 steel. Made in the U.S.A.

SOLD AS SET

91-795 Standard length EVO used in 100/107/113 Ultima® engines.
91-797 +.200 length used in 120/127 Ultima® engines.
91-799 +.500 length used in 130/140 Ultima® engines.
91-897 Standard length pushrod set for Twin cam® 88,96,113 C.I. engines.
91-891 Standard length used Shovelhead engines.
91-892 +.200 length used Shovelhead engines.

B



91-797

C. *ALUMINUM ALLOY TUBULAR PUSHROD AND HYDRAULIC LIFTER CONVERSION KIT*

The installation of this **U.S.A. MADE** kit will correct all problems associated with hydraulic lifters and at the same time substantially reduce valve train weight. One set contains 4 adjustable pushrods, 4 springs, and 4 hydraulic lifter adapters.

91-263 Pan 1953 thru 1965. SOLD AS KIT
91-264 Shovel 1966 thru 1983.

91-265 4 Solid lifter adapters & springs only. SOLD AS SET
91-332 Springs only. **U.S.A. MADE**. SOLD EACH

C

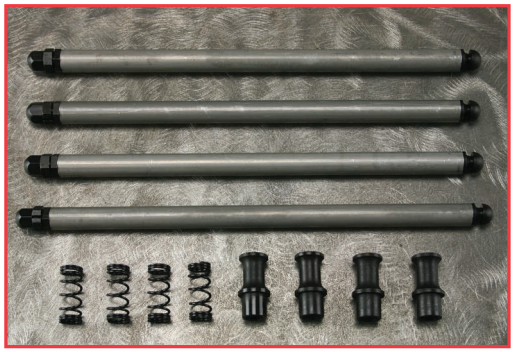

91-263

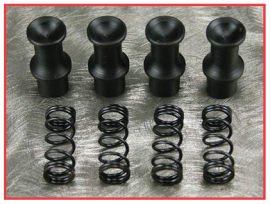

U.S.A. MADE

D. *PUSH ROD TUBE KIT*

Push rod tube kits consist of one upper push rod cover, one lower push rod cover, one retainer, one spring, one spring cover & one washer. Covers and retainer are chrome plated.

91-329 For Sportster® 1957 thru early 1979. **U.S.A. MADE**. SOLD AS SET
91-330 For Pan 1948 thru 1965.
91-331 For Shovel 1966 & later.

D



91-329

CHROME PLATED

91-330



E. *PUSHROD TUBE SEALS*

These **U.S.A. MADE** seals are highly resistant to both heat and oil, resulting in a more positive leak-free seal.

95-436 Colony square neoprene pushrod tube seal kit for Knuckle 1936 thru 1947 & Sportster® 1957 thru early 1979. SOLD AS KIT
95-435 Colony square rubberized cork pushrod tube seal kit for FL, FLH & FX, 1948 thru early 1979. SOLD AS KIT
95-455 Colony square all rubber pushrod tube seal kit for FL, FLH & FX, 1948 thru early 1979. SOLD AS KIT

E

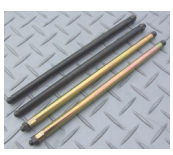



95-455

95-435

A



ANDREWS

B

91-266



91-262



C



D



E



ANDREWS

A. *ADJUSTABLE PUSHROD KIT FOR SHOVEL*

Adjustable pushrods and adjusters using stock diameter tubing fit all years Shovel. Use with hydraulic lifters or our part No. **91-315** lifter converters.

91-667 Aluminum pushrods for quiet operation. SOLD AS KIT OF 4
91-694 Chrome-moly pushrods for maximum strength.

B. *ALUMINUM ALLOY TUBULAR PUSHRODS*

These **U.S.A. MADE** strong, lightweight pushrods are manufactured from the best materials obtainable regardless of cost. All parts are accurately machined, holding tolerances of as small as five tenthousandths inch (.0005"). All steel wear surfaces are CarboNitride heat treated for maximum durability and long life expectancy at high valve spring loads and high rpm.

91-266 For Knuckle 74" 1936 thru 1947. SOLD AS SET
91-267 For H-D® 74" 1948 thru 1952. PKG. OF 4
91-280 For H-D® 74" 1953 thru 1965.
91-262 For H-D® 74" 1966 & later. Use with hydraulic lifters.
91-261 For Pan 1948 thru 1952 lower end using Shovel upper.
91-268 For Sportster® 1957 thru 1985.

C. *HIGH PERFORMANCE PUSHRODS FOR SHOVEL*

This is a new style **U.S.A. MADE** pushrod for the 1966 & later Shovels. The adjuster is put into the lifter body with a design to increase the stability of the pushrod at greater angles. A tapered split lock nut is used for the best possible way to lock the adjusting bolt into the lifter body. A 5/16 - 32 extra fine thread is used for easier and close adjustments. All pushrods are long enough to accommodate engines with stroker cylinders. All wear surfaces are hardened for maximum wear and durability.

91-513 Rods & lifters with instructions. SOLD AS KIT
91-514 Same kit as above **91-513** except using 7/16" O.D. 4130 aircraft tubing. SOLD AS KIT
91-517 Additional lock nuts. 5/16 - 32. SOLD EACH

D. *QUICK CHANGE PUSHRODS FOR EVOLUTION® BIG TWIN*

U.S.A. MADE — Rocker box or tappet guide removal is not necessary with Quick Change pushrods — making cam installation a much faster and easier job. Manufactured of **4130 chrome moly** steel with heat treat hardened ends and adjusters. Pushrod tube diameter is 7/16".

91-752 For Evolution® Big Twin 1984 thru 1999. SOLD AS KIT
91-860 For Twin Cam 88™.

E. *EZ-INSTALL PUSHRODS*

EZ-Install pushrods are available in either aluminum (6061T6) or steel (4130 moly). Kits include 4 adjustable steel or aluminum pushrods which will install without removing tanks or rocker boxes.

SOLD AS KIT

FOR EVOLUTION® 80

91-754 4 Aluminum pushrods; purple anodized finish.
91-755 4 Chrome moly steel pushrods.

FOR TWIN CAM 88™

91-761 4 Aluminum pushrods; bronze anodized finish.
91-762 4 Chrome moly steel pushrods.

A. *ANDREWS PUSHRODS FOR EVOLUTION® BIG TWIN & SPORTSTER®*

This kit of fully adjustable pushrods is a must for any cam change since the stock pushrods are not adjustable and therefore more difficult to reinstall.

91-411 4 Stock diameter aluminum pushrods and adjusters for Evolution® Big Twin 1984 & later. Replaces OEM 17900-84. SOLD AS KIT

This kit of fully adjustable pushrods have extra rigid high strength construction for all out performance applications.

91-612 4 Chrome moly pushrods and adjusters for Evolution® Big Twin 1984 & later. SOLD AS KIT

These kits of super light aluminum pushrods for Evolution® Sportster® are stock diameter so there is no cover tube interference.

91-541 4 Stock diameter aluminum pushrods and adjusters for Evolution® Sportster® 1984 thru 1990. SOLD AS KIT

91-692 4 Stock diameter, adjustable chrome moly steel pushrods for maximum strength, for 1984 thru 1990 Evolution® Sportster® (not shown). Extra rigid high strength construction for all out performance applications.



A



ANDREWS

6

B. *HIGH PERFORMANCE PUSHRODS FOR EVOLUTION®*

U.S.A. MADE Evolution® pushrod kits come with four adjustable pushrods with instructions. Made of 7/16" O.D. aluminum tubing. Solid lifter deactivators are available separately. **NOTE:** Be sure to order correct deactivators to fit proper year motor.

91-518 Adjustable pushrod set for all Evolution® Sportster®. Replaces OEM 17901-86. SOLD AS KIT

91-520 Hydraulic tappet deactivators for all late 1985 & later 1340 and 1986 & later XL 883/1100/1200 models. Replaces OEM 18507-85. SOLD AS KIT OF 4

91-239 Additional lock nuts 9/32 - 32 to fit the above kits and other pushrod adjusting screws using this thread. Replaces OEM 18570-38. SOLD EACH

B




91-239


91-520

U.S.A. MADE

C. *STANDARD PUSHROD SET FOR EVO®*

91-897 Standard length pushrod set for EVO®

C

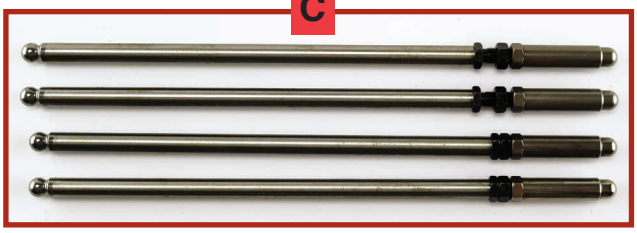

D. *TAPPET ROLLER KITS*

High quality rollers and axles for replacement on H-D® tappets. For Big Twin 1936 thru 1984 and Sportster® 1952 thru 1985.

91-74 Midwest kit. Replaces OEM 18534-29. SOLD AS KIT OF FOUR

D





91-990



91-887



B



91-888



C



91-880



91-883



91-884



91-898



D

91-991



E



F

A. *ULTIMA® KING-PIN LIFTERS*

New Ultima® King-Pin lifters are the perfect lifter for high performance Evo Big Twin & Sportster® engines. Key design features include an oversized axle, CNC machined & precision ground body, increased oil flow to the drivetrain which greatly improves top end life & dependability.

91-990 Ultima "King-Pin" Lifter fits Evo BT 84-99 & Sportster®/ Buell® 87-90

B. *ULTIMA® LIFTERS*

91-887 Ultima® hydraulic lifters for Sportster® 883 & 1200, 1989-1998
91-888 Ultima® stock lifters for Twin Cam® 1999 & later.

C. *HY LIFT JOHNSON® LIFTERS FOR TC® '99 & LATER*

91-880 Hy Lift Johnson hydraulic lifters for use on EVO 1984-1999, 1986 thru 1990 Sportsters® & Buell 1987 thru 1990. .842" O.D. RPLS OEM 18523-86.
91-883 Hy Lift Johnson hydraulic lifters for use on 883cc & 1200 Sportster® 1989 thru 1998. OEM 18526-89A, 18521-92A.
91-884 Hy Lift Johnson hydraulic lifters for use on Twin Cam® 1450cc 1999 & later, 4-cam Sportster® 883cc, 1200cc XL 2000 & later
91-898* Hy Lift Johnson stock lifters for Twin Cam® 1999 & later, inc Mil rpls, OEM 18538-99

D. *HYDRAULIC UNITS FOR '53-'84 BIG TWINS*

Hydraulic roller tappet assemblies are precision manufactured for original equipment performance & durability. Fits Pan & Shovel engines 1953 thru 1984. Replaces OEM 17920-53A.

91-991 Midwest hydraulic unit. SOLD EACH

E. *HYDRAULIC LIFTER CONVERTERS*

These **U.S.A. MADE** converters eliminate hydraulic units on 1953 & later Big Twins. SOLD AS KIT

91-315 For use with stock H-D® or Midwest push rods part No. **91-280** or **91-262**.

F. *HYDRAULIC UNITS FOR BIG TWINS*

Hydraulic roller tappet inserts are precision manufactured for original equipment performance & durability. Fits Pan & Shovel engines 1953 thru 1984. Replaces OEM 17920-53A.

91-605 Midwest hydraulic unit. SOLD EACH

A. *LIFTER ALIGNMENT PIN FOR TWIN CAM®*

91-896 SLifter alignment pin for Twin Cam®



B. *HY-REV™ HYDRAULIC LIFTERS*

Patented hydraulic lifters feature a unique anti-pump up race retainer designed to replace the stock spring retaining clip which precisely limits plunger travel. The roller and axle are manufactured of bearing quality carbon/chromium steel. the pushrod seat is carbo-nitrided for severe service applications. High performance at a budget price.

91-837 For Evolution® Sportster® 1991 thru 1999. SOLD EACH
91-838 For Evolution® Sportster® 1991 / 1999. SOLD AS KIT OF FOUR

For Twin Cam 88® 1999 thru 2004 and XL 2000 thru 20004.

91-590 High Energy™ lifters (street). SOLD EACH
91-591 Pro Magnum™ (race).



91-838



91-590

C. *EVOLUTION® TAPPET BLOCKS*

These tappet blocks (front & rear) for Evolution® Big Twin 1984 & later are sold with eight chrome plated allen bolts. Replaces OEM 18542-83A and 18540-83A.

91-613 Chrome tappet blocks SOLD AS SET
91-614 Black tappet blocks.
91-697 Chrome tappet blocks for 4"+ bore motor case, used on all Ultima® Engines 100 C.I. and larger.



91-613



91-614

6

D. *TAPPET BLOCK COVER SETS*





These chrome plated covers are made to match the shape of and cover the stock painted tappet blocks. Removal of pushrods is not necessary.
SOLD AS SET

89-395 Fits Pan & Shovel, 1948 & later.
89-457 Fits Big Twin 1984 & later. (Die cast.)

E. *TAPPET LIFTER BLOCK COVER SET FOR TWIN CAM® '99-'17*



91-970 Tappet lifter block cover set for Twin Cam® SOLD AS PAIR

HASTINGS PISTON RINGS

Hastings motorcycle rings are the very finest **U.S.A. MADE** motorcycle rings made today. These piston ring sets are suitable replacement sets for our pistons, OEM pistons and many more. Always check your ring grooves to determine which set of rings to use. All compression rings are cast, unless otherwise specified.

H-D® 45"

G & GE 1950 thru 1965, K, KH & KHK 1955 & 1956, with 2.745" bore. **NOTE 3.**

93-354	Std.
93-355	.010
93-356	.020
93-357	.030
93-358	.040
93-359	.050
93-360	.060
93-361	.070

H-D® 61"

OHV 61" E & EL with 3-5/16" bore. **NOTE 2.**

93-346	Std.
93-347	.010
93-348	.020
93-349	.030

H-D® 74"

FLH and Super Glide®. All models 1200cc with 3-7/16" bore. **NOTE 3.**

93-330	Std.
93-331	.010
93-332	.020
93-333	.030
93-334	.040
93-335	.050
93-336	.060
93-337	.070

FL, FLE 1200cc 1948 thru 1964 with 3-7/16" bore. **NOTE 1.**

93-322	Std.
93-323	.010
93-324	.020
93-325	.030
93-326	.040
93-327	.050
93-328	.060

H-D® 80"

1340cc 1978 Thru early 1983. OHV with 3.498" bore. **NOTE 3.**

93-338	Std.
93-339	.010
93-340	.020
93-341	.030
93-342	.040

H-D® 80" EVOLUTION

1340cc 1983 thru 1999 Evolution® engine with 3.498" bore. Also late 1983 & 1984 Shovel. **NOTE 4.**

93-456	Std.
93-476	.005
93-457	.010.
93-458	.020.
93-459	.030.
93-460	.040.

BIG BORE SHOVEL 3-5/8" 1ST & 2ND RING GROOVE 5/64", OIL RING 3/16"

Big Bore 3-5/8" Shovel. **NOTE 5.**

93-535	Std.
93-536	.010.
93-537	.020.
93-538	.030.
93-539	.040.

SPORTSTER®

All models 900cc 1957 thru 1971 with 3" bore. **NOTE 3.**

93-306	Std.
93-307	.010
93-308	.020
93-311	.050
93-313	.070

All models 1000cc 1972 & later with 3-3/16" bore. **NOTE 3.**

93-314	Std.
93-315	.010
93-316	.020
93-317	.030
93-318	.040
93-319	.050
93-320	.060
93-321	.070

All models 1200cc Evolution® engine with 3.498" bore. **NOTES 4 & 6.**

93-456	Std.
93-476	.005
93-457	.010
93-458	.020
93-459	.030
93-460	.040

All XL models 1200cc 2004-later, with 3.498" bore.

93-550	Std.
93-551	.005

All models 1100cc Evolution® motor with 3.350" bore. **NOTE 5.**

93-470	Std.
93-471	.005
93-472	.010
93-473	.020
93-474	.030

All models 883cc Evolution® motor with 3" bore. **NOTE 5.**

93-461	Std.
93-462	.005
93-463	.010
93-464	.020

BIG BORE 3-5/8" EVOLUTION® 1st & 2nd RING GROOVE 1/16", OIL RING 5/32"

Big Bore 3-5/8" Evolution®.

93-631	Std.
93-633	.010.
93-634	.020.

TWIN CAM®

1450cc, 88 C.I. 1999 & later with 3.75" bore. **NOTES 5 & 7.**

93-755	Std.
93-756	.005
93-757	.010
93-758	.020
93-759	.030

1550cc, 95 C.I., Big Bore with 3.875" bore. **NOTES 5 & 8.**

93-760	Std.
93-761	.005
93-762	.010
93-763	.020
93-764	.030

4.0" bore. **NOTES 5 & 8.**

93-820	.005
93-821	.010
93-832	.020
93-833	.030

NOTES:

1. Two 3/32" compression rings & one 3/16" chrome 1-piece oil ring.
2. Two 3/32" compression rings & one 3/16" chrome 3-piece oil ring.
3. Two 1/16" compression rings & one 3/16" chrome 3-piece oil ring.
4. Two 1/16" compression rings & one 5/32" chrome 3-piece oil ring.
5. Moly compression rings as required & chrome oil rings.
6. 1200 Sportster Evolution® & Big Twin Evolution® take the same rings.
7. Two 1.5mm compression rings and one 3.0mm oil ring.
8. Two 1.5mm compression rings and one 2.5mm oil ring.

SOLD AS PAIR FOR 2 PISTONS

TOTAL SEAL - GAPLESS RING(Patented)

"THE ULTIMATE IN HIGH PERFORMANCE"

The Total Seal Gapless® ring has no gap to wear open. Instead, its patented design incorporates a two-part interlocking ring to close off the gap and provide a more perfect seal between. piston and cylinder. As the Total Seal ring wears, the gap stays sealed, even after dozens of grueling races.

Easy to install. No unusual tools or piston groove modifications are necessary. Specific instructions are provided with each set.

The Complete Set. Total Seal provides complete sets of rings, consisting of top (fire) ring, one or more combustion rings (including the Gapless® Ring), and one or more oil rings. All rings are selected and matched for the individual application.

NOTE: Although these are both high performance rings, select the best top ring for your application. Street — For economy, particularly in street-type applications, cast iron rings are the rings of choice. Cast iron is highly compatible with cylinder surfaces and provides a long-wearing, quick seating low-cost top ring. For longer wear, chrome or moly faces are provided. Cast iron rings are not recommended for applications encountering high temperatures, high compression, or detonation conditions. Racing — Stronger materials such as ductile (nodular) iron or stainless steel are recommended for more demanding applications such as high performance engines. Unfortunately, ductile, and to some extent, stainless steel, although nearly unbreakable, are not wholly compatible with most cylinder surfaces. Therefore, it is most common to inlay the sealing surface of the ring with either chrome or moly.

1000cc 1972 & later with 3.188" bore. **NOTE 1.**

RACING		STANDARD
—	.050	**93-593**

SPORTSTER®

883cc Evolution® with 3.000" bore. **NOTE 3.**

RACING		STANDARD
93-565	.005	—
—	.010	**93-597**
93-567	.020	—
—	.040	**93-600**

NOTES:

1. 1/16" x 1/16" x 3/16".
2. 1/16" x 1/16" x 5/32".
3. 1.5" x 1.5" x 2.8mm.
4. 5/64" x 5/64" x 3/16".
5. 1200 Sportster® Evolution® and Big Twin Evolution® take the same rings.

SOLD AS PAIR FOR 2 PISTONS

RACING SETS

Top: Moly or chrome ductile.
2nd: Gapless® .
3rd: 3-Piece.

STANDARD SETS

Top: Cast iron.
2nd: Gapless®.
3rd: 3-Piece.

MAHLE PISTONS

With experience from original equipment to NASCAR and even Formula 1, MAHLE the largest piston manufacturer in the world brings true technology to the V-twin market. MAHLE integrates what they learn on the track into every piston they make. MAHLE's piston kits start with forgings from low expansion 4032 alloy aluminum, for superior operating performance and durability. The pistons are deburred and performance coated. The performance coatings include a dry phosphate lubricant to protect against ring micro-welding as well as pin galling at initial start-up and MAHLE's proprietary Grafal® anti-friction skirt coating. All pistons have CNC precision finished pin bores (no honing required). These kits come with high quality steel pins, round wire locks and low drag performance rings (unless noted). Trust your motor to the experts with over 80 years of piston building technology, trust MAHLE.

80 C.I. BIG TWIN 1340 EVOLUTION® 1984 & LATER

10:1 ratio, 1.381 pin height , domed piston

BORE	PART NO.	RINGS
3.498 (Std.)	**93-794**	**93-456**
3.503 (+.005)	**93-795**	**93-476**
3.508 (+.010)	**93-796**	**93-457**
3.518 (+.020)	**93-797**	**93-458**
3.528 (+.030)	**93-798**	**93-459**

REPLACEMENT 96 C.I. PISTONS

9.75:1 ratio (most OEM Evolution® heads)., 1.200 pin height (0.012 tighter squish than most), flat top piston

BORE	PART NO.	RINGS
3.625 +.010	**93-782**	**93-633**
3.625 +.020	—	**93-634**
3.625 +.030	**93-784**	—

PISTONS SOLD AS PAIR;
PINS & CLIPS INCLUDED;
RINGS SOLD SEPARATELY
WHEN PART NUMBER LISTED



FOR TWIN CAM® 100 C.I.

10.5:1 ratio, 1.160 pin height, dome piston

BORE	PART NO.
3.875 (Std.)	**92-500**
3.875 +.005	**92-501**
3.875 +.010	**92-502**
3.875 +.020	**92-503**
3.875 +.030	**92-504**

FOR TWIN CAM® 113 C.I.

10.9:1 ratio, 1.075 pin height, dome piston

BORE	PART NO.
4 (Std.)	**93-965**
4 +.005	**93-966**
4 +.010	**93-967**
4 +.020	**93-968**
4 +.030	**93-969**



FOR ULTIMA® 100 C.I.

10.1:1 ratio, 1.450 pin height, dome

BORE	PART NO.
3.875 (Std.)	**93-185**
3.875 +.005	**93-186**
3.875 +.010	**93-187**
3.875 +.020	**93-188**
3.875 +.030	**93-189**

FOR ULTIMA® 107 C.I.

10.6:1 ratio, 1.325 pin height, dome

BORE	PART NO.	RINGS
4 (Std.)	**93-180**	**INCLUDED**
4 +.005	**93-181**	**93-912**
4 +.010	**93-182**	**93-913**
4 +.020	**93-183**	**93-120**
4 +.030	**93-184**	**93-121**

FOR ULTIMA® 113 C.I.

11.2:1 ratio, 1.200 pin height, dome

BORE	PART NO.	RINGS
4 (Std.)	**93-175**	**INCUDED**
4 +.005	**93-176**	**93-912**
4 +.010	**93-177**	**93-913**
4 +.020	**93-178**	**93-120**
4 +.030	**93-179**	**93-121**

FOR ULTIMA® 120 C.I.

9.5:1 ratio, 1.200 pin height, flat

BORE	PART NO.
4.250 (Std.)	**93-970**
4.250 +.005	**93-971**
4.250 +.010	**93-972**
4.250 +.020	**93-973**
4.250 +.030	**93-974**

FOR ULTIMA® 127 C.I.

10.0:1 ratio, 1.075 pin height, flat

BORE	PART NO.
4.250 (Std.)	**93-975**
4.250 +.005	**93-976**
4.250 +.010	**93-977**
4.250 +.020	**93-978**
4.250 +.030	**93-979**

FOR ULTIMA® 130 C.I.

9.5:1 ratio, 1.385 pin height, flat

BORE	PART NO.	RINGS
4.400 (Std.)	**93-980**	**93-995**
4.400 +.005	**93-981**	**INCLUDED**
4.400 +.010	**93-982**	**INCLUDED**
4.400 +.020	**93-983**	**INCLUDED**
4.400 +.030	**93-984**	**INCLUDED**

FOR ULTIMA® 140 C.I.

10.2:1 ratio, 1.200 pin height, flat

BORE	PART NO.	RINGS
4.400 (Std.)	**93-985**	**93-995**
4.400 +.005	**93-986**	**INCLUDED**
4.400 +.010	**93-987**	**INCLUDED**
4.400 +.020	**93-988**	**INCLUDED**
4.400 +.030	**93-989**	**INCLUDED**

ALL PISTON SETS - SOLD AS PAIR

BIG BORE KIT FOR EVOLUTION® 883 XLH MODEL SPORTSTER®

The 1200cc Big Bore conversion kit for Evolution® 883cc & 1100cc Sportster® will convert your 883 or 1100 to 1200cc (73.3 C.I.). The piston-pin assembly weights the same as the stock assembly so that your engine does not need to be re-balanced. They can be installed in the bike without splitting the case. Your cylinders must be bored to accommodate this kit. No head modification necessary with the inverse dome. 1.200 pin height.

BORE	STROKE	CR	PART NO.	RINGS
3.498	3.812	9.75	**93-790**	**93-456**
3.508	3.812	9.75	**93-791**	**93-457**
3.518	3.812	9.75	**93-792**	**93-458**

PISTONS SOLD AS PAIR;
PINS & CLIPS INCLUDED;
RINGS SOLD SEPARATELY.

SEE SEC. 6 & 13 FOR ULTIMA® TORQUE PLATES



WISECO PERFORMANCE PISTON KITS

ALL KITS INCLUDE: FORGED PISTONS, RINGS, RETAINER CLIPS, AND CHROME PISTON PINS

1200 (74 C.I.) FL-FLH PANHEAD 1948-65, SHOVELHEAD 1966-77

	BORE	COMP. RATIO	CC DISPL.	
92-105	3.437 / STD	9:1	1200	
92-106	3.447/+.010	9:1	1213	
92-107	3.457 /+.020	9:1	1220	
92-108	3.467 /+.030	9:1	1227	
92-109	3.477 /+.040	9:1	1234	
92-110	3.487 /+.050	9:1	1241	SHOVELHEAD ONLY
92-111	3.497 /+.060	9:1	1249	SHOVELHEAD ONLY
92-112	3.517 /+.080	9:1	1263	SHOVELHEAD ONLY

SPORTSTER® 1200cc 2004-07 AND BUELL XB12R/SB12S

	BORE	COMP. RATIO	CC DISPL.
92-189	3.498 / STD	10.5:1	1200
92-190	3.508 /+.010	10.5:1	1207
92-191	3.518 /+.020	10.5:1	1214

1340 SHOVELHEAD (80 C.I.) 1978-84

	BORE	COMP. RATIO	CC DISPL.
92-113	3.497 / STD	7:1	1340
92-114	3.507 /+.010	7:1	1345
92-115	3.517 /+.020	7:1	1353
92-116	3.527 /+.030	7:1	1361
92-117	3.537 /+.040	7:1	1367
92-118	3.497 / STD	9.5:1	1340
92-119	3.507 /+.010	9.5:1	1345
92-120	3.517 /+.020	9.5:1	1353
92-121	3.527 /+.030	9.5:1	1361
92-122	3.537 /+.040	9.5:1	1367

1200 EVO SPORTSTER® 1988-03, 1100 EVO SPORTSTER® 1986-87 (ALL EVO SPORTSTER® & BUELL MODELS WITH STOCK 1200 HEADS)

	BORE	COMP. RATIO	CC DISPL.
92-133	3.498 / STD	9:1	1200
92-134	3.508 /+.010	9:1	1207
92-135	3.518 /+.020	9:1	1214
92-147	3.498 / STD	10.5:1	1200
92-148	3.508 /+.010	10.5:1	1207
92-149	3.518 /+.020	10.5:1	1214
92-150	3.528 /+.030	10.5:1	1221

1000 IRON SPORTSTER® 1972-85

NOTE: WILL NOT FIT XR STYLE HEAD

	BORE	COMP. RATIO	CC DISPL.
92-100	3.188 / STD	10:1	1000
92-101	3.198 /+.010	10:1	10003
92-102	3.208 /+.020	10:1	1006
92-103	3.218 /+.030	10:1	1016
92-104	3.228 /+.040	10:1	1022

BUELL S1/S3/S3T MODELS WITH 101HP THUNDERSTORM HEADS

	BORE	COMP. RATIO	CC DISPL.
92-158	3.498 / STD	10:1	1200
92-159	3.508 /+.010	10:1	1207
92-160	3.518 /+.020	10:1	1214

883 EVO SPORTSTER® 1986-06

NOTE: OVERBORE TO 1200cc (73 C.I.)

	BORE	COMP. RATIO	CC DISPL.
92-173	3.498 / STD	8.5:1	1200
92-128	3.498 / STD	9.5:1	1200
92-129	3.508 /+.010	9.5:1	1207
92-130	3.518 /+.020	9.5:1	1214
92-131	3.528 /+.030	9.5:1	1221
92-132	3.538 /+.040	9.5:1	1228
92-144	3.498 / STD	10:1	1200
92-145	3.508 /+.010	10:1	1207
92-146	3.518 /+.020	10:1	1214

WISECO PERFORMANCE PISTON KITS

ALL KITS INCLUDE: FORGED PISTONS, RINGS, RETAINER CLIPS, AND CHROME PISTON PINS

1340 EVO BIG TWIN 1984-99 FOR SCREAMIN' EAGLE HEADS (80 C.I.)

	BORE	COMP. RATIO	CC DISPL.
92-168	3.518	10.5:1	1353

TWIN CAM 88™ 1550cc BIG BORE KIT 1999-06 (95 C.I.)
KIT ALSO INCLUDES: COMPLETE TOP END GASKET KIT.
NOTES: CYLINDER BORING REQUIRED

	BORE	COMP. RATIO	CC DISPL.
92-169	3.875"	9:1	1546
92-170	3.880"	9:1	1550
92-171	3.885"	9:1	1554
92-161	3.875"	10.5:1	1546
92-162	3.880"	10.5:1	1550
92-163	3.885"	10.5:1	1554
92-164	3.895"	10.5:1	1562

TWIN CAM 88™ 1999-06 1802cc BIG BORE STROKER KIT (110 C.I.)
KIT ALSO INCLUDES: COMPLETE TOP END GASKET KIT.
NOTES: CYLINDER BORING AND RESLEEVING REQUIRED.

CASES MUST BE BORED TO ACCEPT BIG BORE SLEEVES PART NUMBER 93-103. 4-3/8" STROKER CRANK REQUIRED.

	BORE	COMP. RATIO	CC DISPL.
92-188	4.000"	10:1	1802

TWIN CAM® 96 2007 1691cc BIG BORE KIT (103 C.I.)
NOTE: RECALIBRATION REQUIRED. CYLINDER BORING REQUIRED

	BORE	COMP. RATIO	CC DISPL.
92-210	3.875"	9:1	1691
92-196	3.885"	9:1	1700
92-197	3.875"	10.5:1	1691
92-198	3.880"	10.5:1	1695
92-199	3.885"	10.5:1	1700

93-102	1340 EVO BIG BORE SLEEVES
93-103	TWIN CAM 88™ BIG BORE SLEEVES



TWIN CAM® 96 2007 1802cc BIG BORE KIT (110 C.I.)
NOTES: RECALIBRATION REQUIRED. BIG BORE CYLINDERS AND CASE BORING REQUIRED

	BORE	COMP. RATIO	CC DISPL.
92-200	4.000"	10.5:1	1802

TWIN CAM® 96 2007 1917cc BIG BORE KIT (117 C.I.)
NOTES: RECALIBRATION REQUIRED. BIG BORE CYLINDERS AND CASE BORING REQUIRED

	BORE	COMP. RATIO	CC DISPL.
92-201	4.125"	10.5:1	1917

1340 EVO BIG TWIN 1984-99 (80C.I.)

	BORE	COMP. RATIO	CC DISPL.
92-123	3.498 / STD	8.5:1	1340
92-124	3.508 /+.010	8.5:1	1345
92-125	3.518 /+.020	8.5:1	1353
92-126	3.528 /+.030	8.5:1	1361
92-127	3.538 /+.040	8.5:1	1369
92-138	3.498 / STD	10:1	1340
92-139	3.503 /+.005	10:1	1342
92-140	3.508 /+.010	10:1	1345
92-141	3.518 /+.020	10:1	1353
92-142	3.528 /+.030	10:1	1361
92-143	3.538 /+.040	10:1	1369

"MAKE YOUR HARLEY® HYPER!"

PERFORMANCE KB MOTORCYCLE PISTONS



DISH



DOME



FLAT



HEMI DOME

6

APPLICATION	RING END GAP FACTOR	PISTON TO WALL CLEARANCE
Street normally aspirated	.0065"	.0015" - .002"
Street nitrous or supercharged	.0080"	.0015" - .0025"
Flat track gasoline	.0080"	.0015" - .0030"
Flat track alcohol	.0060"	.0015" - .0030"
Drag gasoline	.0075"	.0015" - .0030"
Drag alcohol	.0065"	.0015" - .0030"
Drag supercharged or nitrous gas	.0095"	.0015" - .0030"

KEITH BLACK "KB" PERFORMANCE PISTONS

KB is offering performance which is not just limited to the the road. Right out of the box, KB supplies diamond machined pistons that feature a light weight design and are held to + / - one gram within the set. In addition, KB
holds skirt sizes of less than one half thousandths (.0005") tolerance from piston to piston. KB Pistons are made of high strength, T5 heat treated, 390 hypereutectic aluminum alloy. This alloy yields better thermal efficiency with less expansion, and superior wear characteristics. The KB design, combined with the hypereutectic alloy, can be run at .0015" piston-to-wall clearance with no scoring; the tightest clearances in the industry. In addition, the thermal efficiency of the 390 alloy allows engine timing to be reduced, and the tight clearances virtually eliminates piston noise. All of these features combine to give you an engine that runs quiet, efficient, and longer than previously possible of the 390 alloy .

SPECIAL CLEARANCE REQUIREMENTS OF KB PISTONS

Suggested piston to wall clearance: KB pistons can be installed tighter than other performance pistons. A close-fitting piston rocks less, supports the ring better, and seals the engine for maximum power. When a loose fit engine is desired, the rigid skirt design of the KB piston allows the builder a choice without fear of piston damage. The chart below shows minimum and realistic maximum loose fit clearance for KB pistons.

SPECIAL NOTICE ON TOP RING END GAP

The KB pistons' unique thermal conductivity, ring location and varied end use requires special attention to be paid to top ring gap. KB Pistons make more horsepower by reflecting heat energy back into the combustion process and, as a result, the top ring runs hotter and requires additional end clearance. Increasing ring end gap does not affect performance or oil control because normal end gaps are realized at operating temperatures. Failure to provide sufficient top ring end gap will cause a portion of the top ring land to break as the ring ends butt and lock tight in the cylinder. The broken piece may cause further piston or engine damage. Safe top ring end gaps can be found by multiplying the bore diameter by the appropriate ring end gap factor from the adjoining chart. Example: 3.5" bore " "Street Normally Aspirated" = 3.5" bore x .0065 = .028" top ring end gap. **NOTE:** Second ring end gaps do not need extra clearance. As a general rule, retarding spark timing 2 to 4 degrees makes the best horsepower when KB pistons are used. Excessive spark advance, lean fuel mixture, or too much compression for the fuel and cam used will make heat sufficient to butt piston rings with as much as .060" ring end gap. Nitrous engines need a spark retard.

"KB" PISTONS FOR TWIN CAM 88™

INCLUDES HASTINGS RINGS AND WRIST PINS WITH CLIPS

DESCRIPTION	COMP RATIO	STD	.005
Big Bore 95" Twin Cam®.	9.3:1	**93-744**	—
		SOLD AS SET OF TWO PISTONS WITH RINGS	

KB PISTONS CONTINUED ON NEXT PAGE

YOU MUST ORDER BY MIDWEST PART NUMBER

KNUCKLE, PAN, SHOVEL FL, FLH & FX, 1941 THRU 1979 74 CID			KB NUMBER **KB263**	USES RINGS	PISTON SIZE	MIDWEST PART NO.
BORE	HEAD TYPE	CYL. HEIGHT	ROD LENGTH	Two 1/16"	Std.	**93-640**
3.438"	.656" Dome	5.330"	7.440"	One 3/16"	.010	**93-641**
STROKE	COMP HGT.	COMP. RATIO	PISTON/PIN WGT		.020	**93-642**
3.969	1.450"	(9.0:1 @ .0" deck) (7.8:1 @ .085" deck)	370/97 grs		.030 .040 .050 .060 .070	**93-643** **93-644** **93-645** **93-646** **93-647**

SHOVEL FL, FLH & FX 1978 THRU 1984 80 CID			KB NUMBER **KB288**	USES RINGS	PISTON SIZE	MIDWEST PART NO.
BORE	HEAD TYPE	CYL. HEIGHT	ROD LENGTH	Two 1/16"	Std.	**93-648**
3.498"	Hemi Dome	5.330"	7.440"	One 3/16"	.010	**93-649**
STROKE	COMP HGT.	COMP. RATIO	PISTON/PIN WGT		.020	**93-650**
4.250"	1.285"	(7.2:1 @ .085" deck)	357/97 grs		.030 .040	**93-651** **93-652**

SHOVEL FL, FLH & FX 1978 THRU 1984 80 CID			KB NUMBER **KB297**	USES RINGS	PISTON SIZE	MIDWEST PART NO.
BORE	HEAD TYPE	CYL. HEIGHT	ROD LENGTH	Two 1/16"	Std.	**93-679**
3.498"	Hemi Dome	5.330"	7.440"	One 3/16"	.010	**93-680**
STROKE	COMP HGT.	COMP. RATIO	PISTON/PIN WGT		.020	**93-681**
4.250"	1.285"	(8.3:1 @ .085" deck)	/97 grs		.040	—

SHOVEL 1948 THRU1984 88" - 98" CID			KB NUMBER **KB294**	USES RINGS	PISTON SIZE	MIDWEST PART NO.
3-5/8" BORE	HEAD TYPE	CYL. HEIGHT	ROD LENGTH			
3.625"	Hemi Dome	5.330-5.530	7.440"	One 1/16"	Std.	**93-684**
STROKE	COMP HGT.	COMP. RATIO	PISTON/PIN WGT	Two 3/16"	.010	**93-685**
4.250" to	1.285"		/97 grs		.020	**93-686**
4.750"	(8.5:1 w/4.250" stroke @ .085" deck) (9.38:1 w/4.750" stroke @ .085" deck)				.030 .040	**93-687** **93-688**

1340cc EVOLUTION® FX, FLH & FX, 1984 & LATER 80 CID			KB NUMBER **KB258**	USES RINGS	PISTON SIZE	MIDWEST PART NO.
BORE	HEAD TYPE	CYL. HEIGHT	ROD LENGTH	Two 1/16"	Std.	**93-653**
3.498"	Flat Top	5.550"	7.440"	One 3/16"	.005	**93-654**
STROKE	COMP HGT.	COMP. RATIO	PISTON/PIN WGT		.010	**93-655**
4.250"	1.375"	8.6:1	350/97 grs		.020	**93-656**
					.030	**93-657**

1340cc EVOLUTION® FX, FLH & FX, 1984 & LATER 80 CID			KB NUMBER **KB305**	USES RINGS	PISTON SIZE	MIDWEST PART NO.
BORE	HEAD TYPE	CYL. HEIGHT	ROD LENGTH	Two 1/16"	Std.	**93-689**
3.498"	Dome	5.550"	7.440"	One 3/16"	.005	**93-690**
STROKE	COMP HGT.	COMP. RATIO	PISTON/PIN WGT		.010	**93-691**
4.250"	1.375"	9.6:1	/97 grs		.020	**93-692**
					.030	**93-693**

1340cc EVOLUTION® FX, FLH & FX, 1984 & LATER 80 CID			KB NUMBER **KB266**	USES RINGS	PISTON SIZE	MIDWEST PART NO.
BORE	HEAD TYPE	CYL. HEIGHT	ROD LENGTH	One 1/16"	Std.	**93-659**
3.498"	.200 Dome	5.550"	7.440"	Two 3/16"	.005	**93-660**
STROKE	COMP HGT.	COMP. RATIO	PISTON/PIN WGT		.010	—
4.250"	1.375"	10.5:1	360/97 grs		.020	**93-662**
					.030	**93-663**
					.040	**93-664**

EVOLUTION® BIG TWIN 1984 & LATER 88 CID			KB NUMBER **KB293**	USES RINGS	PISTON SIZE	MIDWEST PART NO.
3-5/8" BORE	HEAD TYPE	CYL. HEIGHT	ROD LENGTH	One 1/16"	.030	**93-699**
3.625"	Flat Top	5.550"	7.440"	Two 3/16"		
STROKE	COMP HGT.	COMP. RATIO	PISTON/PIN WGT			
4.250"	1.375"	10.0:1	/97 grs			

SOLD AS SET OF 2 PISTONS WITH RINGS

KB PISTONS CONTINUED ON NEXT PAGE

KB Performance Pistons for Twin Cam 88® 1998-2006 & Twin Cam® 1997-Present

YOU MUST ORDER BY MIDWEST PART NUMBER



92-70 Flat Top Pistons



92-71 Dome Top Pistons

TWIN CAM 1998-2006, 88 C.I.			KB NUMBER KB339	USES RINGS	PISTON SIZE	MIDWEST PART NO.
BORE 3.750"	HEAD TYPE Flat Top	DECK HEIGHT 6.000"	ROD LENGTH 7.667"	Two 1/16" One 5/32"	Std.	92-61
					.005	92-62
STROKE 4.000	COMP HGT. 1.270"	COMP. RATIO 8.8:1 @ w/85cc	PISTON/PIN WGT 370/144 grams		.010	92-63

TWIN CAM 1998-2006, 88 C.I.			KB NUMBER KB343	USES RINGS	PISTON SIZE	MIDWEST PART NO.
BORE 3.750"	HEAD TYPE Dome	DECK HEIGHT 6.000"	ROD LENGTH 7.667"	Two 1/16" One 5/32"	Std.	92-65
					.005	92-66
STROKE 4.000	COMP HGT. 1.270"	COMP. RATIO 10.6:1 @ w/85cc	PISTON/PIN WGT 430/144 grams		.010	92-67

TWIN CAM 2007-Present, 103 C.I.			KB NUMBER KB409	USES RINGS	PISTON SIZE	MIDWEST PART NO.
BORE 3.875"	HEAD TYPE Flat Top	DECK HEIGHT 6.000"	ROD LENGTH 7.667"	Two1.5mm One 2.5mm	Std.	92-70
STROKE 4.375	COMP HGT. 1.086"	COMP. RATIO 10.0:1 @ w/85cc	PISTON/PIN WGT 371/102 grams			

TWIN CAM 2007-Present, 103 C.I.			KB NUMBER KB660C	USES RINGS	PISTON SIZE	MIDWEST PART NO.
BORE 3.875"	HEAD TYPE Dome	DECK HEIGHT 6.000"	ROD LENGTH 7.667"	Two1.5mm One 2.5mm	Std.	92-71
STROKE 4.375	COMP HGT. 1.086"	COMP. RATIO 10.0:1 @ w/95cc	PISTON/PIN WGT 369/106 grams			

TWIN CAM 1999-2006, 95 C.I.			KB NUMBER KB904C	USES RINGS	PISTON SIZE	MIDWEST PART NO.
BORE 3.875"	HEAD TYPE Dome	DECK HEIGHT 6.000"	ROD LENGTH 7.667"	Two 1.5mm One 2.5mm	Std.	92-75
					.005	92-76
STROKE 4.006	COMP HGT. 1.263"	COMP. RATIO 9.25:1 @ w/85cc	PISTON/PIN WGT 350/89 grams		.010	92-77

TWIN CAM 1999-2006, 95 C.I.			NUMBER KB906C	USES RINGS	PISTON SIZE	MIDWEST PART NO.
BORE 3.875"	HEAD TYPE Dome	DECK HEIGHT 6.000"	ROD LENGTH 7.667"	Two 1.5mm One 2.5mm	Std.	92-80
					.005	92-81
STROKE 4.000	COMP HGT. 1.263"	COMP. RATIO 10.5:1 @ w/85cc	PISTON/PIN WGT 382/89 grams		.010	92-82

TWIN CAM 2007-Present, 103 C.I.			KB NUMBER KB909C	USES RINGS	PISTON SIZE	MIDWEST PART NO.
BORE 3.875"	HEAD TYPE Dome	DECK HEIGHT 6.000"	ROD LENGTH 7.667"	Two 1.5mm One 2.5mm	Std.	92-85
STROKE 4.375	COMP HGT. 1.086"	COMP. RATIO 10.5:1 @ w/85cc 9.5:1 @ w/95cc	PISTON/PIN WGT 361/106 grams			

TWIN CAM 2007-Present, 110-113 C.I.			KB NUMBER KB915C	USES RINGS	PISTON SIZE	MIDWEST PART NO.
BORE 4.000"	HEAD TYPE Dome	DECK HEIGHT 6.000"	ROD LENGTH 7.667"	Two 1.5mm One 2.5mm	Std.	92-86
STROKE 4.375	COMP HGT. 1.086"	COMP. RATIO 10.5:1 @ w/85cc 9.5:1 @ w/95cc	PISTON/PIN WGT 391/188 grams			

"MAKE YOUR HARLEY® HYPER!"



YOU MUST ORDER BY MIDWEST PART NUMBER

SPORTSTER® 1972 THRU 1985 61CID			KB NUMBER **KB292**	USES RINGS	PISTON SIZE	MIDWEST PART NO.
BORE	HEAD TYPE	CYL. HEIGHT	ROD LENGTH	Two 1/16"	.010	**93-718**
3.188"	Dome	5.330"	7.440"	One 3/16"	.020	**93-719**
STROKE	COMP HGT.	COMP. RATIO	PISTON/PIN WGT		.030	**93-720**
3.812	1.182"	8.2:1	335/97 grs		.050	**93-722**

883cc TO 1200cc CONVERSION XL 1986 & LATER 74 CID **NOTE 1**			KB NUMBER **KB272**	USES RINGS	PISTON SIZE	MIDWEST PART NO.
BORE	HEAD TYPE	CYL. HEIGHT	ROD LENGTH	Two 1/16"	Std.	**93-671**
3.498"	Dish	4.650"	6.938"	One 3/16"	.010	**93-672**
STROKE	COMP HGT.	COMP. RATIO	PISTON/PIN WGT		.040	**93-675**
3.812	1.210"	10.0:1	335/97 grs			

1200cc EVOLUTION® XL 1988 & LATER 74 CID			KB NUMBER **KB264**	USES RINGS	PISTON SIZE	MIDWEST PART NO.
BORE	HEAD TYPE	CYL. HEIGHT	ROD LENGTH	Two 1/16"	.010	**93-667**
3.498"	Flat Top	4.650"	6.938"	One 3/16"		
STROKE	COMP HGT.	COMP. RATIO	PISTON/PIN WGT			
3.812	1.210"	9.0:1	349/97 grs			

NOTE 1: Dished piston dome requires no head work for conversion.
NOTE 2: Deeper valve pockets for high lift cam. Valve-to-piston clearance must **ALWAY**S be checked.

SOLD AS SET OF 2 PISTONS WITH RINGS

6

IMPORTED PISTONS

Molybdenum "MoS2" coated pistons. The skirt is coated by "MoS2" to help prevent cylinder wall scuffing. This is the same process used by the OEM on late model motors. See each application for details about compression ratio and parts included with each piston. **Note:** Paint dot belongs on cam side. SOLD EACH

74 CU. IN. — 1200CC — 3-7/16" LOW COMPRESSION — 7.5 TO 1

UNCOATED	SIZE	
93-370	.020	NOTE 1 THRU 4
93-371	.040	
93-388	.050	

74 CU. IN. — 1200CC — 3-7/16" STD. COMPRESSION — 8.5 TO 1

UNCOATED	SIZE	
93-283	.010	NOTE 1, 2 & 4

80 CU. IN. — 1340CC — 3-1/2" LOW COMPRESSION — 7.5 TO 1

UNCOATED	SIZE	
93-428	.010	
93-430	.030	NOTE 1, 2 & 3

80 CU. IN. — 1340CC — 3-1/2" STD. COMPRESSION — 8.5 TO 1

UNCOATED	SIZE	MoS2	
93-365	.010	—	
93-366	.020	—	NOTE
93-367	.030	**93-809**	1, 2 & 5

80 CU. IN. — 1340CC — 3-1/2" EVOLUTION® STD. COMPRESSION — 8.5 TO 1

UNCOATED	SIZE	
93-501	.005	
93-502	.010	NOTE
93-503	.020	1, 2 & 5

NOTE 1: Piston pin & circlips.
NOTE 2: Cast piston.

SPORTSTER® 900CC —3" STD. COMPRESSION 9.5 TO 1

UNCOATED	SIZE	
93-290	Std.	NOTE 1 & 2
93-291	.010	
93-294	.040	

SPORTSTER® 1000CC — 3-3/16" LOW COMPRESSION — 8.5 TO 1

UNCOATED	SIZE	
93-373	Std.	NOTE 1, 2 & 3

SPORTSTER® 1000CC — 3-3/16" STD. COMPRESSION — 9.5 TO 1

UNCOATED	SIZE	
93-275	.010	NOTE 1 & 2
93-280	.060	

SPORTSTER® 1100CC — EVOLUTION® STD. COMPRESSION

UNCOATED	SIZE	
93-521	.005	NOTE 1, 2 & 5
93-522	.010	
93-523	.020	

SPORTSTER® 1200CC — EVOLUTION® STD. COMPRESSION

UNCOATED	SIZE	
93-615	.010	NOTE 1, 2 & 5
93-616	.020	

NOTE 3: The use of low compression pistons will enable you to successfully street drive these bikes on available pump gas without detonation. These are low compression, not low performance pistons.
NOTE 4: These pistons use FLH type rings.
NOTE 5: Uses stock type rings.

A



DOME



DISH

6

B



41-943



41-944

C

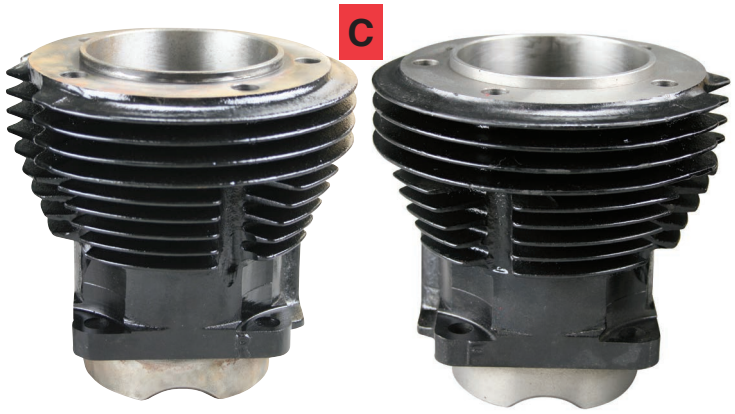

D



A. *SPECIALTY PISTON KITS FOR ULTIMA® ENGINES*

Piston kits include: Pistons, pins & clips. Dome pistons require 30˚ cut into cylinder heads **SOLD AS SET**

93-486 Piston kit, 140" Ultima®, 37cc Dome, +0.005 Bore.
93-490 Piston kit, 140" Ultima®, 32cc Dish, Std. Bore.
93-491 Piston kit, 140" Ultima®, 32cc Dish, +0.005 Bore.

B. *COLONY CYLINDER BASE NUTS FOR BIG BORE*

High torque cylinder base nuts for all big bore cylinders. Also fits stock 74" & 80" cylinders.

41-943 Chrome plated cylinder base nuts for big bore cylinders. **SOLD AS KIT**
41-944 Black oxide cylinder base nuts for big bore cylinders.

41-766 12 Point head bolt & washer kit for big bore Pan & Shovel, 1948 & later. **SOLD AS KIT**

C. *BIG BORE 3-5⁄8" CYLINDERS FOR SHOVEL*

Top quality 3-5/8" bore replacement cylinders for Shovel 1966 thru 1984.

REFERENCE INFORMATION

93-261 & **93-262**	**93-263** & **93-264**
Stock length cylinder.	.200" Longer cylinder.
Stroke: 3-31/32" = 82 C.I.	Stroke: 4-1/2" = 93 C.I.
Stroke: 4-1/4" = 88 C.I.	Stroke: 4-5/8" = 96 C.I.
	Stroke: 4-3/4" = 98 C.I.

Stock stroke on 74 C.I. is 3-31/32".
Stock stroke on 80 C.I. is 4-1/4".

93-261 Front cylinder, stock length (5.330"). **SOLD EACH**
93-262 Rear cylinder, stock length (5.330").
93-263 Front cylinder., .200" longer.
93-264 Rear cylinder., .200" longer.

D. *PISTON PIN CLIPS FOR H-D® BIG TWIN*

93-362 CIRCLIP FOR 1937 / 1972. (OEM 22581-32)
93-221 SPIRAL TYPE CIRCLIP FOR 1973 / 1977. (OEM 22582-52)
93-422 RETAINING RING FOR 1978 & LATER. (OEM 22588-78)

E. *PISTON PIN CLIPS FOR TWIN CAM® '99-'16*

E



Quality equals or exceeds OEM specifications. Package of ten clips.
98-731 Piston pin clips. OEM 22097-99

TOP END ENGINE PARTS FOR H-D® FLAT HEAD MODELS

ALL PARTS SOLD EACH EXCEPT AS NOTED

1	—	CAD PLATED BOLT KIT FOR 45", 74" & 80" SIDE VALVE WITH IRON HEADS. COLONY. SOLD AS SET
2	**41-398**	HEAT TREATED CAD PLATED HEAD BOLT WASHERS ALL H-D® EXCEPT ALUMINUM FLATHEAD MODELS. SOLD AS SET
3		CAST IRON VALVE GUIDE. INTAKE & EXHAUST THE SAME PART NUMBER. SOLD EACH
	91-490	STANDARD SIZE CAST IRON VALVE GUIDE 45" FLATHEAD 1932 / 1972.
4	—	CYLINDER LINER 3-5/16 X 8", 3/32" WALL FOR 74" SIDE VALVE
5	—	CHROME TAPPET BLOCK SCREW & WASHER SET 8 SCREWS & 8 WASHERS. COLONY (OEM 2329 & 7231) SOLD AS SET
6	—	STANDARD SIZE TAPPET. JIMS (OEM 18490-29)
7	**41-767**	CHROME ALLEN HEAD TAPPET BLOCK SCREW KIT, 8 SCREWS. COLONY (OEM 2329) SOLD AS KIT
8	**91-74**	TAPPET ROLLER KIT BIG TWIN 1936 / 1984. MIDWEST (OEM 18534-29) SOLD AS KIT OF FOUR
9	—	EXHAUST VALVE 45" FLATHEAD 1932 & LATER. OEM 18080-32)
10	**78-62**	ASBESTOS HEAD GASKET 45" (OEM 16768-39)

H-D® 74" & 80"

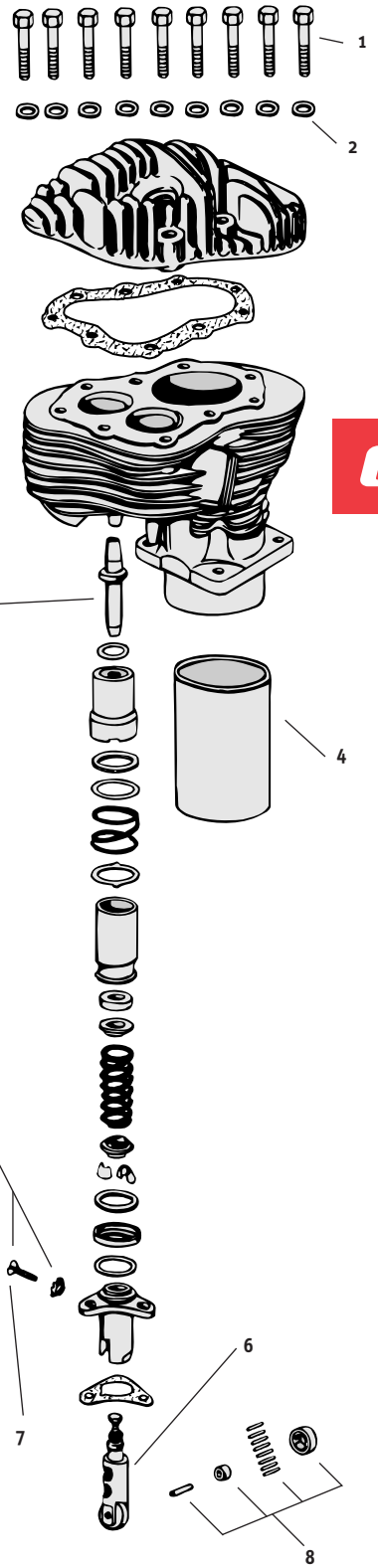

H-D® 45"

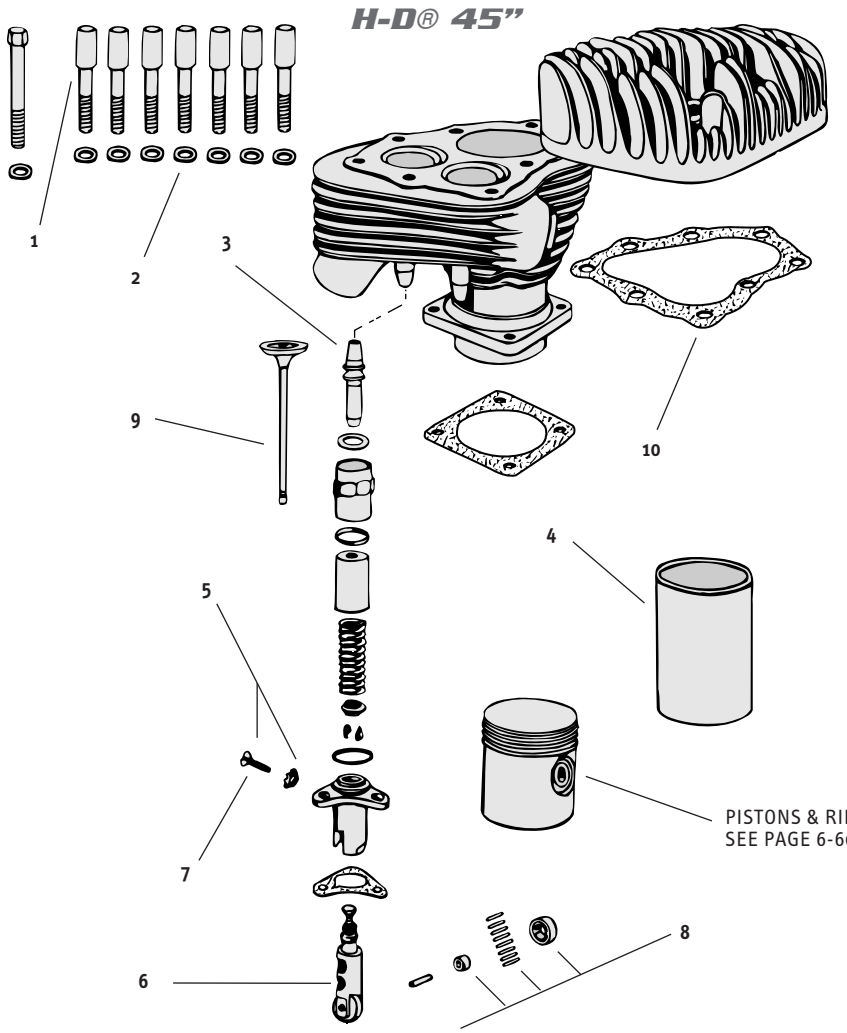

TOP END ENGINE PARTS FOR KNUCKLE 61 & 74 C.I. 1936 THRU 1947

ALL PARTS SOLD EACH EXCEPT AS NOTED

1	—	CAD PLATED BOLT KIT WITH WASHERS KNUCKLE 1940 / 1947 COLONY. SOLD AS SET
2	**41-398**	HEAD BOLT WASHER KIT. COLONY. (OEM 6469)
3	**91-481**	STANDARD SIZE CAST IRON INTAKE VALVE GUIDE 61" & 74" KNUCKLE 1936 / 1947.
	91-486	.002 OVER STOCK SIZE CAST IRON EXHAUST VALVE GUIDE 61" & 74" KNUCKLE 1936 / 1947.
4	—	CYLINDER LINER 3-7/16" X 6-5/8", 3/32" WALL FOR 74"
5	—	CHROME TAPPET BLOCK SCREW & WASHER SET 8 SCREWS & 8 WASHERS. COLONY (OEM 2329 & 7231) SOLD AS SET
6	—	EXHAUST TAPPET ASSY. JIMS MACHINING. (OEM 18493-36)
7	**41-767**	CHROME ALLEN HEAD TAPPET BLOCK SCREW KIT, 8 SCREWS. COLONY (OEM 2329) SOLD AS KIT
8	**91-74**	TAPPET ROLLER KIT BIG TWIN 1936 / 1984. MIDWEST (OEM 18534-29) SOLD AS KIT OF FOUR
9	—	INTAKE VALVE BIG TWIN 1936 / 1947. (OEM 18071-36)
11	**41-401**	16 PIECE CHROME BASE NUT & WASHER SET. COLONY. SOLD AS SET
12	—	8 PIECE CYLINDER BASE STUD SET. COLONY (OEM 16831-30) SOLD AS SET
13	**91-239**	9/32-32 LOCK NUT ONLY. **U.S.A. MADE** (OEM 18570-38)
14	**91-242**	SCREW ONLY. **U.S.A. MADE**
15	—	VALVE KEYS. MANLEY. (OEM 18228-36) SET OF FOUR PAIR
16	**91-269**	COLLARS **U.S.A. MADE** SET OF FOUR
17	—	ROCKER ARM SHIM SET. COLONY. SET OF FOUR PIECES
18	—	FRONT 74" CYLINDER. (OEM 16483-41)
	—	REAR 74" CYLINDER. (OEM 16491-41)
19	**89-63**	OUTER UPPER PUSHROD COVER KIT (2" LONG CLIPS) KNUCKLE 1936 / 1939. COLONY. SOLD AS SET
	89-62	OUTER UPPER PUSHROD COVER KIT (3-5/16" LONG CLIPS) KNUCKLE 1940 / 1947. COLONY. SOLD AS SET
20	**89-135**	OEM STYLE LOWER PUSHROD COVER KIT KNUCKLE 1940 / 1947. INCLUDES CORKS. COLONY. SOLD AS SET
21	**91-266**	ALUMINUM ALLOY TUBULAR PUSHRODS KNUCKLE 74" 1936 / 1947 **U.S.A. MADE** SOLD AS SET OF FOUR
22	**93-362**	CIRCLIP FOR 1937 / 1972. (OEM 22581-32)

TOP END ENGINE PARTS FOR KNUCKLE 61 & 74 C.I. 1936 THRU 1947

ALL PARTS SOLD EACH EXCEPT AS NOTED

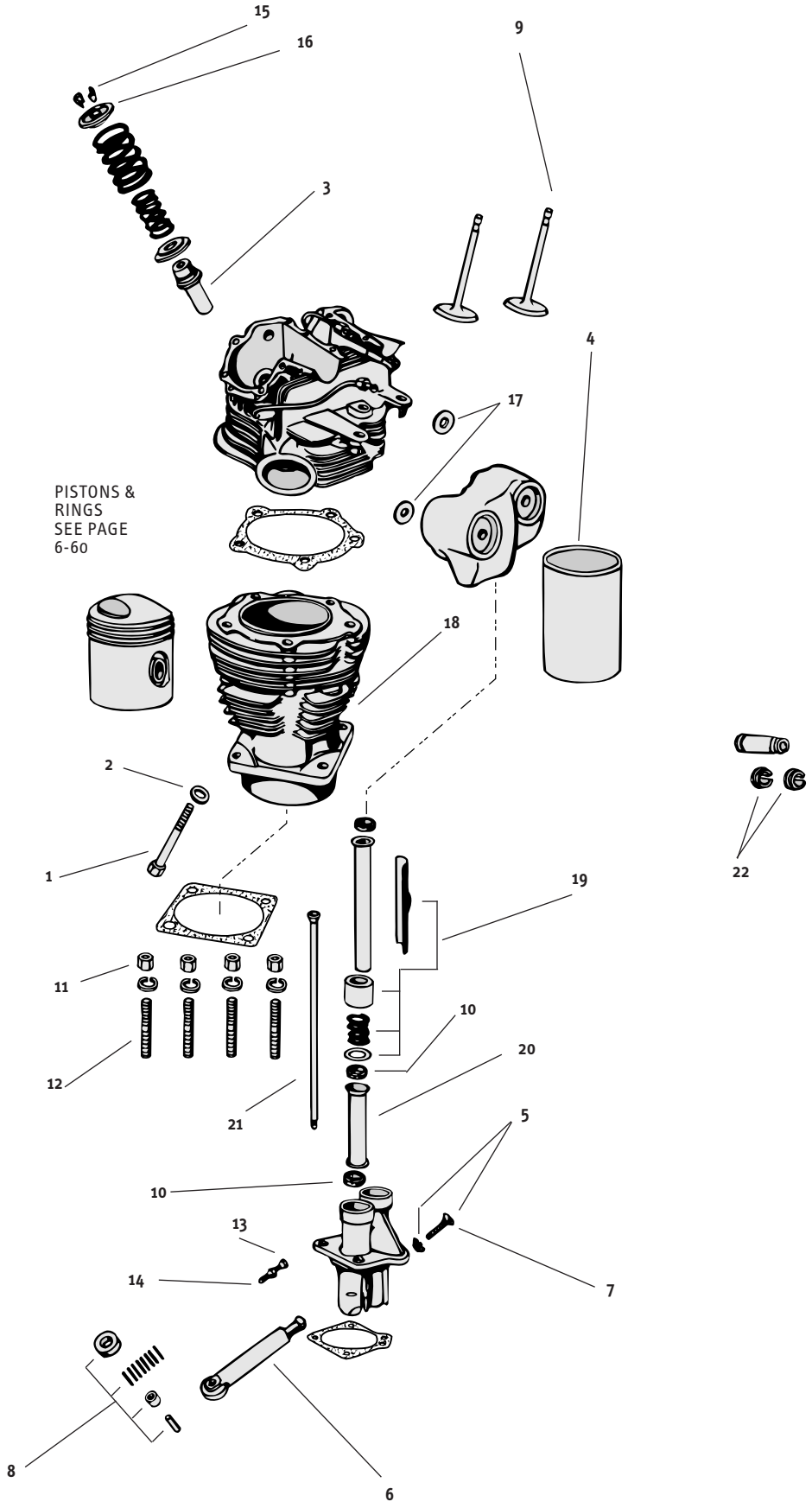

TOP END ENGINE PARTS FOR PAN 61 & 74 C.I. 1948 THRU 1965

SOLD EACH EXCEPT AS NOTED

COMPLETE PUSHROD COVER KIT ON PAGE 6-6/64 **ALSO AVAILABLE COMPLETE ASSORTMENT OF DECORATIVE NUTS & BOLTS IN SECTION 14**

1	—	VALVE KEEPERS FOR H-D® 74". MANLEY. (OEM 18228-36) SOLD AS SET OF FOUR PAIRS
2	**91-269**	TOP VALVE COLLARS FOR H-D® 74". USES STOCK KEEPERS. **U.S.A. MADE** SOLD AS SET OF FOUR
3	—	VALVE SPRING. SOLD AS SET OF FOUR INNER & FOUR OUTER
4	—	SEAL & SLEEVE FOR LATE 1981 & LATER, INTAKE & EXHAUST. SEE BELOW FOR INSTALLATION TOOL
5	**78-370**	VALVE GUIDE GASKET. **U.S.A. MADE** (OEM 18196-51)
7	**41-398**	HEAT TREATED CAD PLATED HEAD BOLT WASHERS ALL H-D® EXCEPT ALUMINUM FLATHEAD MODELS. SOLD AS SET
8	**93-421**	CAD PLATED HEAD BOLT & WASHER KIT PAN & SHOVEL 1948 / 1984. COLONY. (OEM 6469)
9	**93-272**	FRONT 74" CYLINDER
	93-273	REAR 74" CYLINDER
10	—	CHROME HORSE® STAINLESS STEEL ALLEN VALVE COVER SCREW KIT FOR ALL PAN WITH STEEL D-RINGS. SOLD AS KIT
	91-665	STOCK STYLE SCREWS. 45/64" LONG FOR STEEL RINGS. COLONY. 24 PIECES
	91-302	LONG ALLEN SCREWS FOR BOTH ROCKER COVERS, FOR THICK RING. CHROME. 24 PIECES. GARDNER WESCOTT. SOLD AS KIT
11	**89-73**	REINFORCEMENT D-RINGS WITH SCREWS. THICK ALUMINUM, CHROME PLATED. (OEM 17509-54A) SOLD AS SET OF TWO
12	—	ROCKER ARM COVER. SOLD AS PAIR
13	**78-146**	ROCKER ARM COVER GASKET, FIBER, 1/8" THICK.
14	**91-350**	ROCKER OHV ASSEMBLY, REAR INTAKE/FRONT EXHAUST. SOLD AS ASSY.
15	**91-349**	ROCKER OHV ASSEMBLY, REAR EXHAUST/FRONT INTAKE. SOLD AS ASSY.
16	—	ROCKER ARM SET. (OEM 17360-48 & 17375-48) SOLD AS SET
18	**78-33**	FRONT CYLINDER BASE GASKET 1963 / 1965. **U.S.A. MADE** (OEM 16776-63)- 1/4 X 20
	78-51	REAR CYLINDER BASE GASKET 1963 / 1965 **U.S.A. MADE** (OEM 16777-63) - 1/4 X 24
19	—	CYLINDER LINER 3-7/16" X 6-5/8", 3/32" WALL FOR 74"
20	—	8 PIECE CYLINDER BASE STUD SET. COLONY. (OEM 16831-30) SOLD AS SET
21	**41-401**	16 PIECE CHROME BASE NUT & WASHER SET. COLONY. SOLD AS SET
22	**91-512**	UPPER (INNER) PUSHROD COVER ALL OHV BIG TWIN 1936 / 1979. COLONY. SOLD AS KIT OF FOUR
23	**91-321**	SPRING. **U.S.A. MADE**
24	**91-322**	WASHER. **U.S.A. MADE** (OEM 6762B)
25	**95-435**	COLONY SQUARE NEOPRENE PUSHROD TUBE SEAL KIT. (OEM 17955-36 & 17955-48)
26	**89-61**	UPPER (OUTER) PUSHROD COVER KIT WITH 2-3/8" CLIPS, FOR PAN 1948 / 1965. COLONY. SOLD AS SET
27	**91-263**	ALUMINUM ALLOY TUBULAR PUSHROD & HYDRAULIC LIFTER CONVERSION KIT PAN 1953 / 1965 **U.S.A. MADE** SOLD AS KIT
	91-267	ALUMINUM ALLOY TUBULAR PUSHROD KIT 74" 1948 / 1952 **U.S.A. MADE** SOLD AS KIT
	91-280	ALUMINUM ALLOY TUBULAR PUSHROD KIT 74" 1953 / 1965 **U.S.A. MADE** SOLD AS KIT
28	**91-242**	SCREW ONLY. **U.S.A. MADE**
29	**91-239**	NUT ONLY. **U.S.A. MADE**
30	**41-767**	CHROME ALLEN HEAD TAPPET BLOCK SCREW KIT 8 SCREWS 1/4-24 TAPER 1936 / 1976. COLONY (OEM 2329) SOLD AS KIT
31	—	CHROME TAPPET BLOCK SCREW & WASHER SET 8 1/4-24 TAPER SCREWS SCREWS & 8 WASHERS 1936 / 1976. COLONY (OEM 2329 & 7231) SOLD AS SET
32	**95-435**	COLONY SQUARE NEOPRENE PUSHROD TUBE SEAL KIT. (OEM 17955-36 & 17955-48)
33	**91-638**	CHROME LIFTER BASE SET FOR 1953 & LATER. COMES WITH 8 ALLEN SCREWS. 1/4 - 20 AND 1/4 - 24. SOLD AS SET
34	**91-605**	MIDWEST HYDRAULIC UNIT. (OEM 17920-53A)
35	**91-285**	HYDRAULIC TAPPET. JIMS. (OEM 18522-53A)
	91-289	HYDRAULIC TAPPET, .005 O.S. JIMS.
36	**91-283**	MECHANICAL TAPPET. JIMS. (OEM 18492-48)
	91-669	MECHANICAL TAPPET .005 OVER SIZE.
37	**91-74**	TAPPET ROLLER KIT BIG TWIN 1936 / 1984.MIDWEST (OEM 18534-29) SOLD AS PKG. OF FOUR
38	**93-362**	CIRCLIP FOR 1937 / 1972. (OEM 22581-32)

TOP END ENGINE PARTS FOR PAN 61 & 74 C.I. 1948 THRU 1965

SOLD EACH EXCEPT AS NOTED

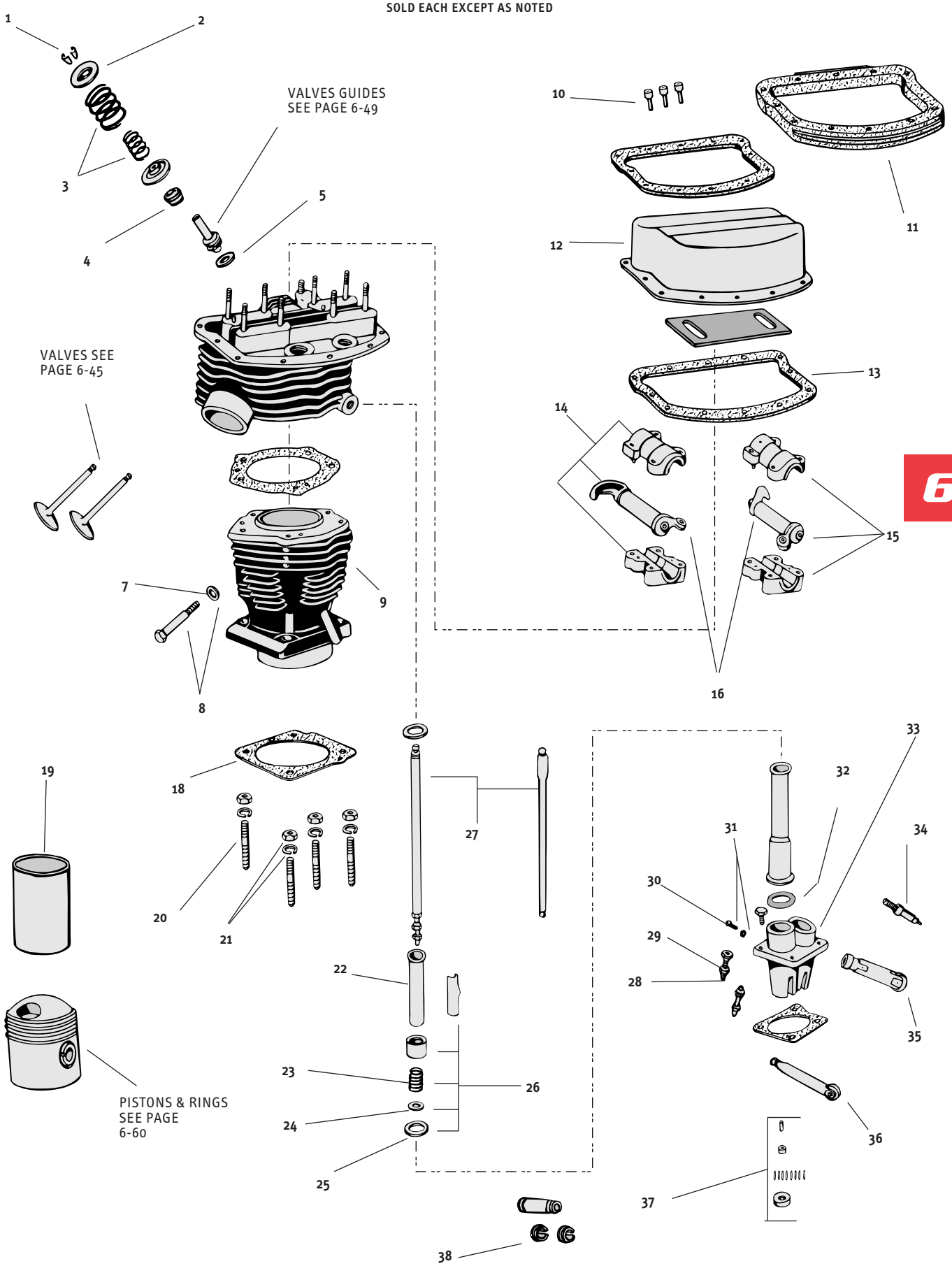

TOP END ENGINE PARTS FOR 74 C.I. (1200CC) & 80 C.I. (1340CC) 1966 THRU 1984

ALL PARTS SOLD EACH EXCEPT AS NOTED

1	**91-313**	REAR EXHAUST / FRONT INTAKE ROCKER ARM (OEM 17360-66) SOLD EACH
	91-839	HEAT TREATED CHROME MOLY ROLLER ROCKER ARMS. JIMS (OEM 17360-66) SOLD AS KIT OF FOUR ROCKER ARMS
2	**95-356**	BUSHING (OEM 17428-57) USE FOUR
3	**95-701**	O-RING **U.S.A. MADE** (OEM 11101)
4	**91-287**	ROCKER SHAFT (OEM 17611-66A)
5	**91-314**	FRONT EXHAUST / REAR INTAKE ROCKER ARM (OEM 17375-66) SOLD EACH
	91-839	HEAT TREATED CHROME MOLY ROLLER ROCKER ARMS. JIMS (OEM 17360-66) SOLD AS KIT OF FOUR ROCKER ARMS
6	**91-277**	ROCKER ARM SHIM .005. **U.S.A. MADE**
	91-469	ROCKER ARM SHIM .010. **U.S.A. MADE**
	91-470	ROCKER ARM SHIM .020. **U.S.A. MADE**
7	**40-318**	CHROME ROCKER ARM COVER HARDWARE KIT FOR ALL SHOVEL. INCLUDES 18 HEX NUTS & 18 FLAT WASHERS. COLONY (OEM 7753 & 6016) SOLD AS KIT
8	**89-344**	CHROME PLATED SHOVEL ROCKER ARM COVERS FOR 1966 / 1984. SEE PAGE 6-39 FOR MORE INFORMATION. SOLD AS SET
	89-389	POLISHED SHOVEL ROCKER ARM COVERS FOR 1966 / 1984. SEE PAGE 6-39 MORE INFORMATION. SOLD AS SET
9	**—**	VALVE KEYS FOR 74" & 80". MANLEY. (OEM 18228-36) SOLD AS SET OF 4 PAIRS
10	**91-269**	TOP VALVE COLLARS. USES STOCK KEEPERS. **U.S.A. MADE** SOLD AS SET OF 4
11	**—**	VALVE SPRING SET. SOLD AS SET OF FOUR INNER & FOUR
12	**91-239**	NUT ONLY. **U.S.A. MADE** (OEM 18570-38)
13	**—**	SEAL & SLEEVE FOR LATE 1981 & LATER, INTAKE & EXHAUST.
14	**78-370**	VALVE GUIDE GASKET. **U.S.A. MADE** (OEM 18196-51)
15	**91-688**	ROCKER BOX STUD KIT INCLUDES 8 LONG, 2 SHORT, AND 1 MOTOR MOUNT STUDS. **U.S.A. MADE** SOLD AS KIT
16	**41-398**	HEAT TREATED CAD PLATED HEAD BOLT WASHERS ALL H-D® EXCEPT ALUMINUM FLATHEAD MODELS. COLONY. SOLD AS SET
17	**93-421**	CAD PLATED HEAD BOLT & WASHER KIT PAN & SHOVEL 1948 / 1984. COLONY. (OEM 6469)
18	**78-61**	HEAD GASKET, TEFLON. **U.S.A. MADE** (OEM 16770-66)
19	**93-268**	1340CC CYLINDER ONLY, FRONT
	93-269	1340CC CYLINDER ONLY, REAR
	93-270	1200CC CYLINDER ONLY, FRONT
	93-271	1200CC CYLINDER ONLY, REAR
20	**78-33**	CYLINDER BASE GASKET, FRONT **U.S.A. MADE** (OEM 16776-63)
	78-51	CYLINDER BASE GASKET, REAR **U.S.A. MADE** (OEM 16777-63)
21	**—**	CYLINDER BASE STUD SET FOR 1930 / 1977. COLONY. (OEM 16831-30) 8 PIECES
22	**—**	CYLINDER LINER 3-1/2" X 6-5/8", 3/32" WALL FOR 80" OHV
23	**41-401**	16 PIECE CHROME BASE NUT & WASHER SET. COLONY. SOLD AS SET
24	**—**	8 PIECE CYLINDER BASE STUD SPACER SET FOR 1978 / 1984. COLONY. (OEM 16836-78) SOLD AS SET
25	**91-285**	HYDRAULIC TAPPET. JIMS. (OEM 18522-53A)
	91-289	HYDRAULIC TAPPET, .005 O.S. JIMS.
26	**91-605**	MIDWEST HYDRAULIC UNIT FOR PAN & SHOVEL 1953 / 1984. (OEM 17920-53A)
27	**91-74**	TAPPET ROLLER KIT BIG TWIN 1936 / 1984. MIDWEST (OEM 18534-29) SOLD AS KIT OF FOUR
28	**91-361**	BLACK TAPPET GUIDE FOR FRONT CYLINDER - REQUIRES FLAT BOTTOM SCREWS (OEM 18600-66B)
	91-362	BLACK TAPPET GUIDE FOR REAR CYLINDER - REQUIRES FLAT BOTTOM SCREWS (OEM 18610-66B)
	91-526	CHROME TAPPET GUIDE FOR FRONT CYLINDER - REQUIRES FLAT BOTTOM SCREWS
	91-527	CHROME TAPPET GUIDE FOR REAR CYLINDER - REQUIRES FLAT BOTTOM SCREWS
	91-638	CHROMED LIFTER BASE SET WITH 8 ALLEN SCREWS. 1/4 - 20 AND 1/4 - 24. SOLD AS SET
29	**41-768**	CHROME 1/4 - 20 ALLEN SCREW 1976 & LATER. COLONY
	—	16 PIECE CHROME TAPPET BLOCK SCREW & WASHER SET 8 1/4-24 TAPER SCREWS SCREWS & 8 WASHERS 1936 / 1976. COLONY (OEM 2329 & 7231) SOLD AS SET
30	**95-435**	SQUARE NEOPRENE PUSHROD TUBE SEAL KIT. COLONY (OEM 17955-36 & 17955-48)
	95-701	O-RING **U.S.A. MADE** (OEM 11101)
31	**89-134**	LOWER PUSHROD COVERS (NOT GROOVED) PAN & SHOVEL 1948 /EARLY 1979. **NOTE:** WILL FIT LATE 1979 / 1983 BY USING PART NO. **91-512** UPPER INNERS. COLONY. SOLD AS SET
	89-59	LOWER PUSHROD COVERS FOR PAN & SHOVEL, 1948 & LATER, GROOVED. COLONY. SOLD AS SET
32	**89-62**	UPPER OUTER PUSHROD COVER KIT FOR KNUCKLE 1940 / 1947, AND ALL SHOVEL & EVOLUTION® (3-5/16" LONG CLIPS) COLONY. SOLD AS SET OF FOUR
33	**95-241**	O-RING LATE 1979 & LATER. **U.S.A. MADE** (OEM 11132)
34	**91-322**	WASHER. **U.S.A. MADE** (OEM 6762B)
35	**91-321**	SPRING. **U.S.A. MADE**
36	**91-512**	UPPER INNER SHOVEL (LONGEST LENGTH) PUSHROD COVERS ALL OHV BIG TWIN 1936 / EARLY 1979 & SPORTSTER® 1957 / 1985. COLONY. SOLD FOUR PER KIT
37	**91-328**	RETAINER. (OEM 17950-66)
38	**91-262**	TUBULAR PUSHRODS H-D® 74" 1966 & LATER. USE WITH HYDRAULIC LIFTERS **U.S.A. MADE**
39	**95-701**	O-RING **U.S.A. MADE** (OEM 11101)
40	**93-221**	SPIRAL TYPE CIRCLIP FOR 1973 / 1977. (OEM 22582-52)
41	**93-362**	CIRCLIP FOR 1937 / 1972. (OEM 22581-32)
42	**93-422**	RETAINING RING FOR 1978 & LATER. (OEM 22588-78)
43	**91-549**	ROCKER SHAFT SPACER. SOLD EACH

TOP END ENGINE PARTS FOR 74 C.I. (1200CC) & 80 C.I. (1340CC) 1966 THRU 1984

COMPLETE ASSORTMENT OF DECORATIVE NUTS & BOLTS IN SECTION 14

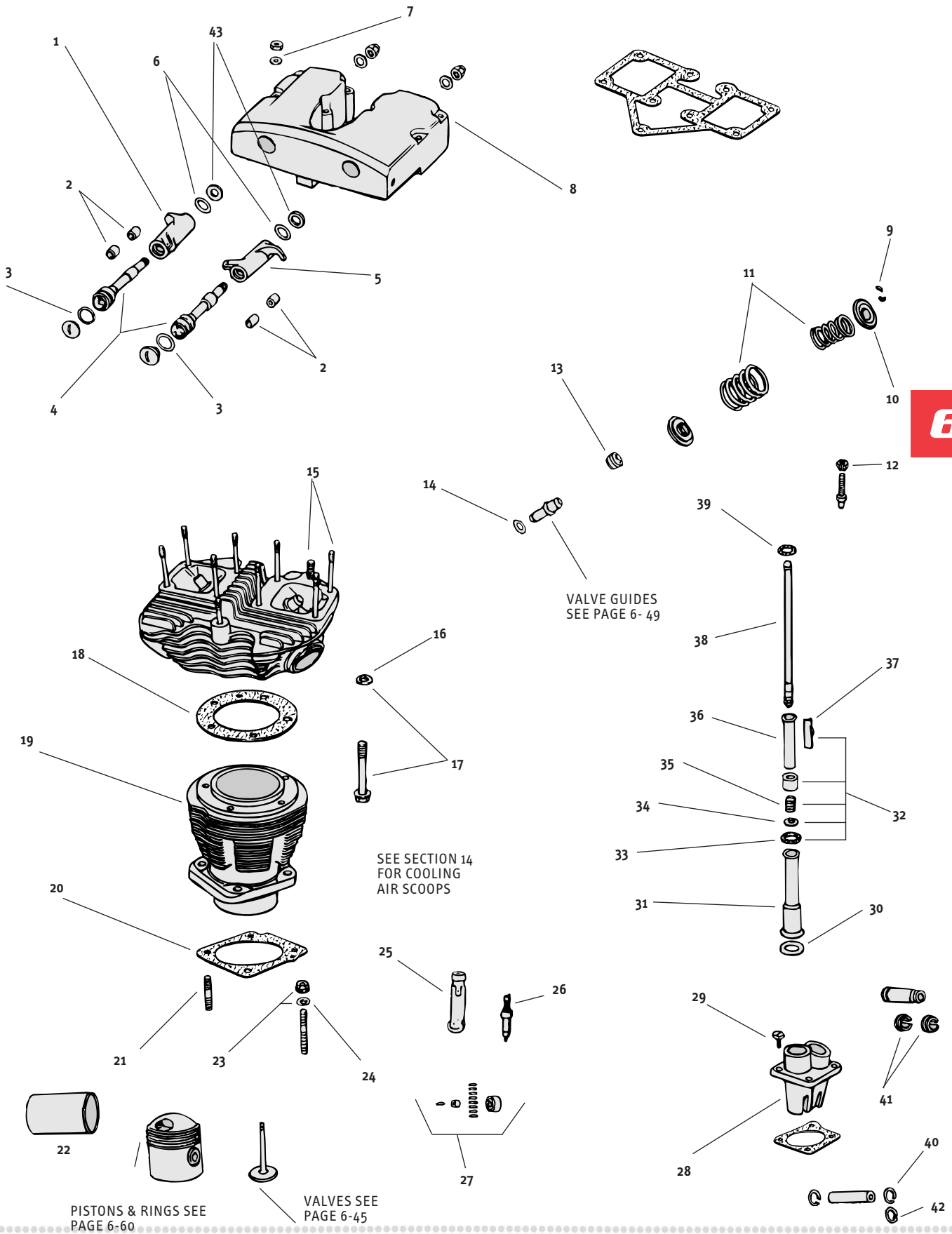

TOP END ENGINE PARTS FOR EVOLUTION® BIG TWIN 1984 & LATER

ALL PARTS SOLD EACH EXCEPT AS NOTED **ALSO AVAILABLE COMPLETE ASSORTMENT OF DECORATIVE NUTS &BOLTS IN SECTION 14**

1	**41-937**	CHROME ROCKER COVER ALLEN BOLT. COLONY
2	**78-444**	FIBER WASHER. **U.S.A. MADE** (OEM 63858-49)
3	**89-351**	CHROME ROCKER COVER 1984 / 1991 (OEM 17528-84A)
5	**89-374**	MIDDLE SPACER 1984 / 1992 (OEM 17510-84)
6	—	CORK. **U.S.A. MADE** (OEM 17355-84)
7	**78-205**	UMBRELLA VALVE 1993 & LATER (OEM 26856-89)
8	**78-320**	3-PIECE ROCKER CORK SET 1984/1991 SOLD AS SET
9	**78-366**	84'-99 INNER ROCKER COVER GASKET RUBBER (OEM 17358-84A)
10	**95-356**	ROCKER BUSHING. (OEM 17428-57)
11	—	ROCKER ARM, FRONT INTAKE/ REAR EXHAUST. MIDWEST (OEM 17360-83) SOLD EACH
	91-699	ROLLER ROCKER ARM SET FOR BIG TWIN 1984 & LATER. (OEM 17360-83 & 17375-83) SOLD AS SET OF FOUR ROCKER ARMS
12	**91-622**	ROCKER ARM, REAR INTAKE/ FRONT EXHAUST. MIDWEST (OEM 17375-83) SOLD EACH
	91-699	ROLLER ROCKER ARM SET FOR BIG TWIN 1984 & LATER. (OEM 17360-83 & 17375-83) SOLD AS SET OF FOUR ROCKER ARMS
13	**89-375**	BOTTOM ROCKER CARRIER 1984 / 1992. (OEM 17530-84B)
14	**91-666**	ROCKER ARM SHAFT **U.S.A. MADE** (OEM 17611-83)
15	**78-321**	2-PIECE GASKET SET WITH SILICONE BEAD 1984 & LATER. IMPORT. SOLD AS SET
16	**78-357**	SILICONE GASKET (OEM 16779-84A)
	78-356	84'-99 LOWER RIGHT ROCKER GASKET FIBER. OEM 16778-84A
17	**91-321**	SPRING **U.S.A. MADE**
18	**91-322**	WASHER **U.S.A. MADE** (OEM 6762B)
19	**95-241**	O-RING **U.S.A. MADE** (OEM 11132)
20	**95-713**	O-RING **U.S.A. MADE**. (OEM 11145)
21	**91-853**	LOWER PUSHROD WASHER (OEM 6737)
22	—	BIG AXLE POWER GLIDE™ TAPPET. JIMS. (OEM 18523-86) SOLD EACH. SEE PAGE 6-48
	—	.005" OVER SIZE BIG AXLE POWER GLIDE™ TAPPET. JIMS. SOLD EACH. SEE PAGE 6-48
	—	BIG AXLE HYDROSOLID HYDRAULIC TAPPET. JIMS. SOLD AS KIT. SEE PAGE 6-48
23	—	ROLLER KIT ONLY. CRANE. SOLD AS KIT OF FOUR
24	**41-768**	CHROME 1/4 - 20 ALLEN SCREW 1976 & LATER. COLONY
25	**91-613**	CHROME TAPPET GUIDES, FRONT & REAR, WITH EIGHT CHROME ALLENS. (OEM 18542-83A & 18540-83A) SOLD AS SET
	91-614	BLACK TAPPET GUIDES, FRONT & REAR, WITH EIGHT CHROME ALLENS. (OEM 18542-83A & 18540-83A) SOLD AS SET
26	**91-328**	RETAINER **U.S.A. MADE** (OEM 17950-66)
27	—	ADJUSTABLE PUSHRODS, MIDWEST **U.S.A. MADE** (OEM 17900-84) SOLD AS KIT
	91-411	ADJUSTABLE PUSHRODS, ANDREWS (OEM 17900-84) SOLD AS KIT
28	**95-716**	O-RING **U.S.A. MADE** (OEM 11157)
29	**93-676**	FRONT OR REAR CYLINDER; 80 C.I. (OEM 16510-83A)
30	**78-353**	BASE GASKET **U.S.A. MADE** (OEM 16774-86A) SOLD EACH
	78-240	BASE GASKETS HAYDEN "THE" OIL FIX SOLD AS KIT. SEE PAGE 6-127
31	**93-618**	COLONY CYLINDER BASE STUDS 1985 & LATER. (OEM 16837-85B) SOLD AS SET OF 8
32	**78-352**	HEAD GASKETS, .059" THICK. COMETIC (OEM 16773-85) SOLD AS PKG. OF FIVE
33	—	VALVE KEYS. MANLEY (OEM 18229-83)
34	—	GUIDE SEAL. (OEM 18001-83A)
35	**41-110**	HEAD BOLT SET FOR BIG TWIN 1985 THRU 1991 AND XL 1986 THRU 1992. OEM 16480-85A & 16478-85A. TWELVE POINT STYLE. POLISHED & CHROME PLATED.
	41-111	HEAD BOLT SET FOR BIG TWIN 1992 & LATER AND XL 1993 & LATER. OEM 16480-92 & 16478-85A. POLISHED.
	40-616	LONG HEAD BOLTS
	40-617	SHORT HEAD BOLTS
36	**66-242**	EXHAUST STUDS
37	**89-416**	ROCKER BOLT KIT
38	**41-112**	HEAD BOLT WASHERS FOR BIG TWIN & XL, 1984 THRU 1991. OEM 16482-85. CHROME PLATED.

TOP END ENGINE PARTS FOR EVOLUTION® BIG TWIN 1984 & LATER

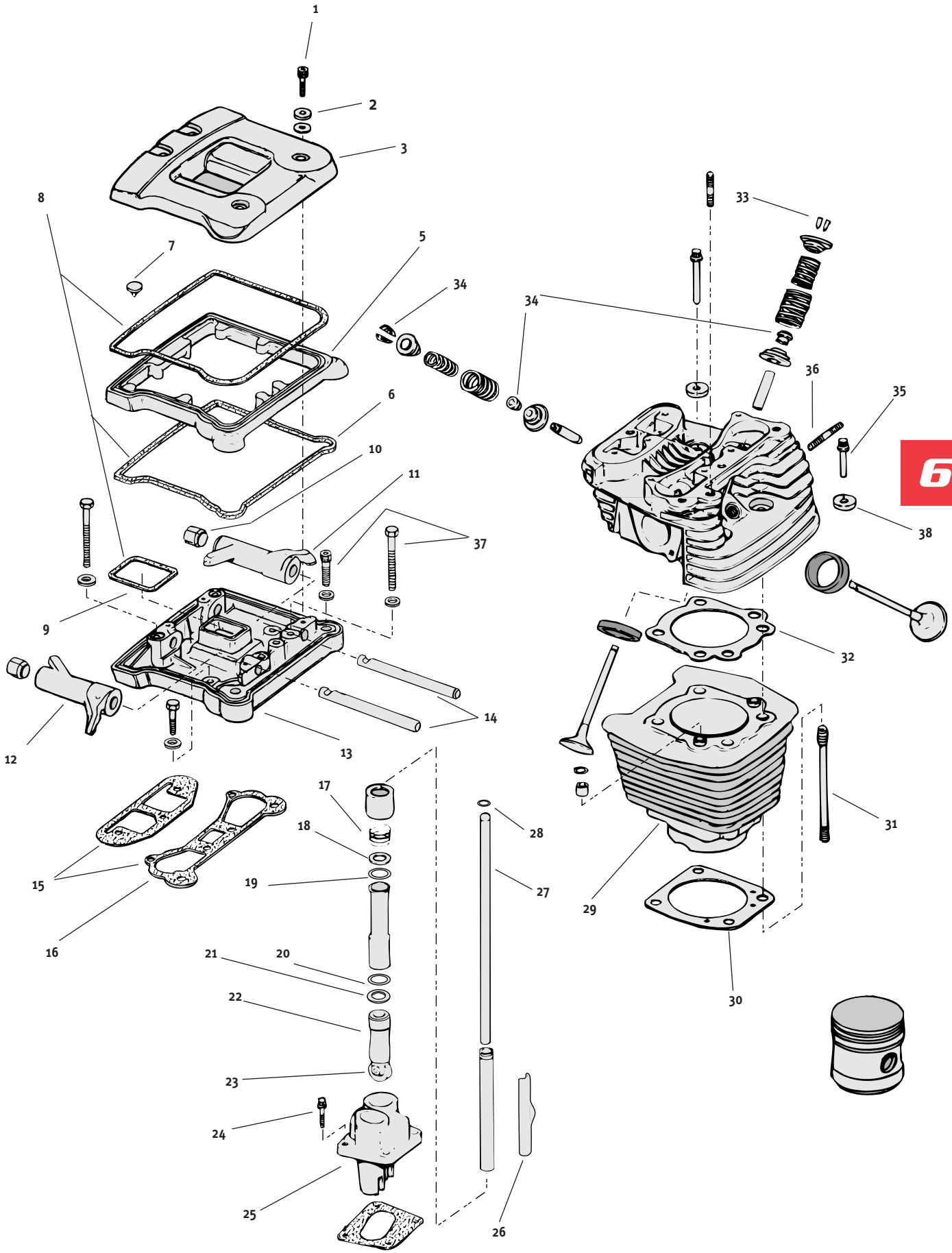

TOP END ENGINE PARTS FOR EVOLUTION® SPORTSTER® 1986 & LATER

ALL PARTS SOLD EACH EXCEPT AS NOTED ALSO AVAILABLE COMPLETE ASSORTMENT OF DECORATIVE NUTS & BOLTS IN SECTION 14

1	41-937	ROCKER COVER ALLEN BOLT . CHROME. COLONY.
2	78-444	FIBER WASHER. **U.S.A. MADE** (OEM 63858-49)
3	—	ROCKER COVER, TOP ONLY. OEM 17501-86B.
4	—	VALVE KEYS. MANLEY. (OEM 18229-83)
5	78-205	UMBRELLA VALVE FOR 1991 & LATER. (OEM 26856-89)
6	78-366	84'-99 INNER ROCKER COVER GASKET RUBBER (OEM 17358-84A)
7	—	ROCKER ARM, FRONT INTAKE/ REAR EXHAUST. MIDWEST. (OEM 17360-83) SOLD EACH
8	95-356	ROCKER BUSHING. (OEM 17428-57)
9	91-622	ROCKER ARM, REAR INTAKE/ FRONT EXHAUST. MIDWEST. (OEM 17375-83)
10	78-357	GASKET, SILICONE. (OEM 16779-84A)
11	91-666	ROCKER ARM SHAFT. **U.S.A. MADE** (OEM 17611-83)
12	—	GUIDE SEAL. (OEM 18001-83A)
13	78-350	883CC HEAD GASKET. COMETIC.
14	78-353	BASE GASKET. **U.S.A. MADE** (OEM 16774-86A)
15	91-321	SPRING. **U.S.A. MADE**
16	91-322	WASHER. **U.S.A. MADE** (OEM 6762B)
17	95-241	O-RING. **U.S.A. MADE** (OEM 11132)
18	95-713	O-RING. **U.S.A. MADE** (OEM 11145)
19	91-291	TAPPET. POWER GLIDE™ - JIMS. SEE PAGE 6-45
20	—	ROLLER KIT ONLY. CRANE. SOLD AS KIT
21	95-716	O-RING. **U.S.A. MADE** (OEM 11157)
22	91-541	ADJUSTABLE PUSHRODS, ANDREWS.
23	—	COLONY CYLINDER BASE STUDS FOR 1986 & LATER. (OEM 16832-86A) SOLD AS SET OF 8
22	—	PUSHRODS, ANDREWS.
24	78-320	3-PIECE ROCKER CORK SET 1984/1991 SOLD AS SET

TOP END PARTS FOR EVOLUTION® SPORTSTER® 1986 & LATER

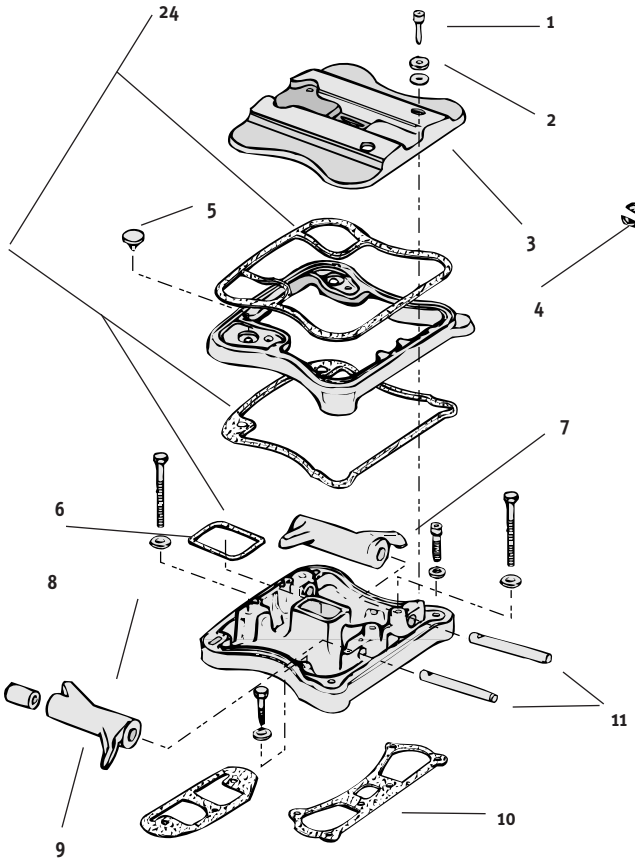

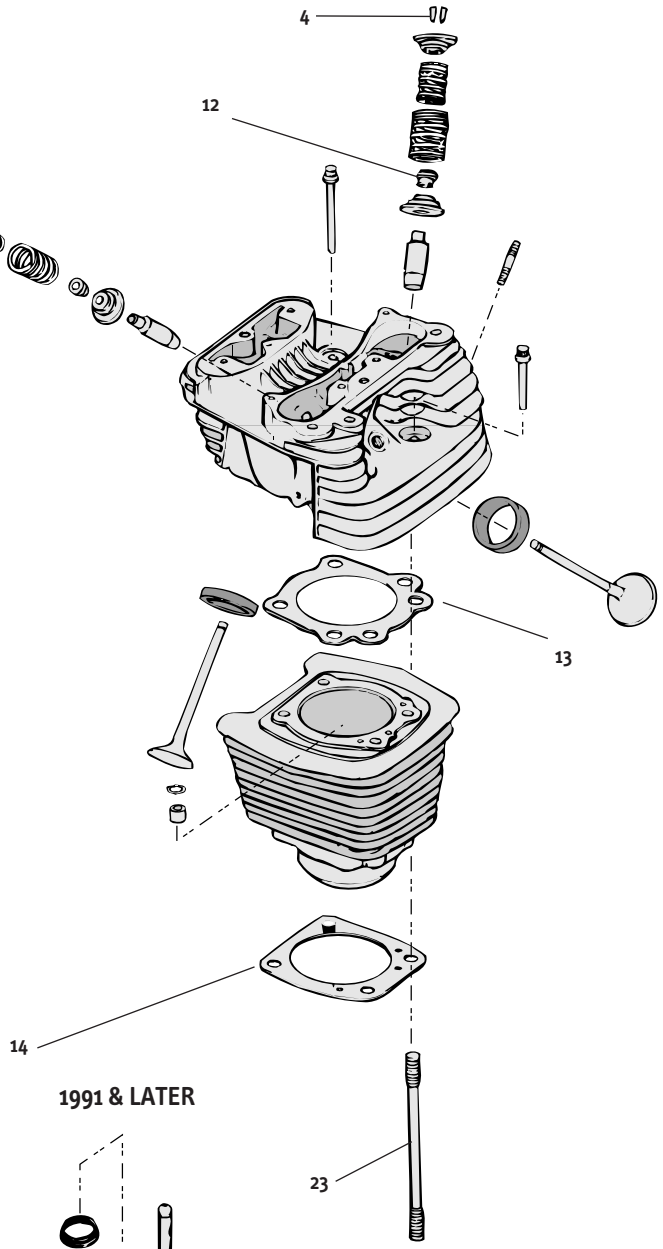

1986 THRU 1990

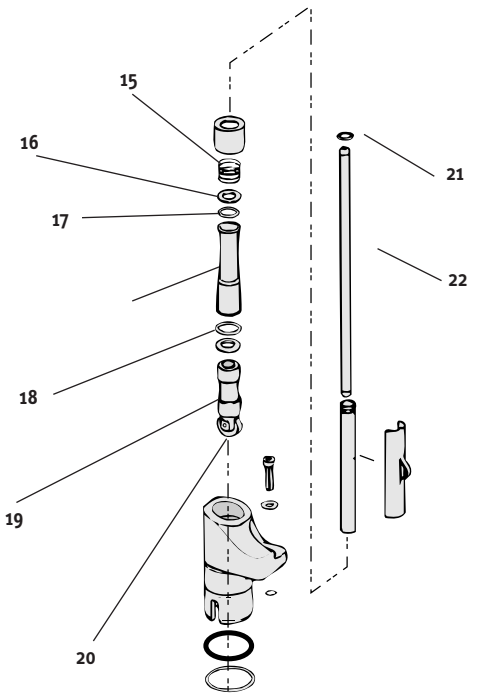

1991 & LATER

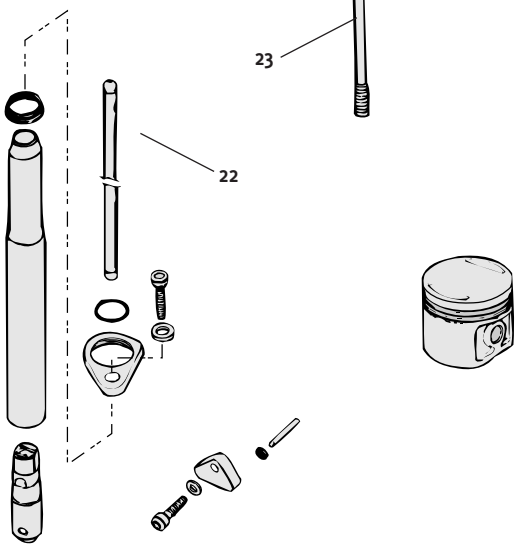

TOP END ENGINE PARTS FOR SPORTSTER® OHV 900CC, 1000CC & K MODEL 1957 THRU 1985

ALL PARTS SOLD EACH EXCEPT AS NOTED **COMPLETE PUSHROD COVER KITS AVAILABLE**

1	78-48	ROCKER COVER GASKET **U.S.A. MADE** (OEM 17536-70)
2	91-528	ROCKER ARM, FRONT EXHAUST (OEM 17394-57A)
	91-529	ROCKER ARM, REAR EXHAUST (OEM 17395-57A)
	91-530	ROCKER ARM, FRONT INTAKE (OEM 17396-57A)
	91-531	ROCKER ARM, REAR INTAKE (OEM 17397-57A)
3	95-356	BUSHING (OEM 17428-57) USE 4
4	91-288	ROCKER ARM SHAFT, SPORTSTER® 1957/1983 (OEM 17435-57A)
5	95-701	O-RING LATE 1979 & LATER (OEM 11101)
6	78-63	HEAD GASKET 1957/1971 ASBESTOS (OEM 16769-57)
	78-243	HEAD GASKET 1973/1985 .032" THICK. COPPER. COMETIC (OEM 16769-73) SOLD AS PKG. OF 10
7	93-259	FRONT CYLINDER FOR 1000CC LATE 1973/EARLY 1985 (OEM 16464-73B)
	93-260	REAR CYLINDER FOR 1000CC LATE 1973/EARLY 1985 (OEM 16465-73B)
8	78-41	BASE GASKET 1972 & LATER **U.S.A. MADE** (OEM 16774-72)
9	–	STOCK CYLINDER BASE STUD NUT/WASHER KIT.COLONY. SOLD AS SET OF 16 PIECES
10	95-241	O-RING LATE 1979 & LATER (OEM 11132) **U.S.A. MADE**
	95-436	SQUARE NEOPRENE SEAL KIT 1957 / EARLY 1979. COLONY
11	—	VALVE KEYS SET OF 4 PAIRS MANLEY (OEM 18228-30) SOLD AS PKG. OF FOUR PAIRS
12	–	SEAL & SLEEVE EXHAUST
13	–	TAPPET GUIDE
14	93-445	CYLINDER LINER — 3/32" WALL 900CC 3" X 6-3/16"
15	91-74	TAPPET ROLLER KIT (OEM 18534-29) SOLD AS PKG. OF FOUR
16	91-239	NUT ONLY (OEM 18510-38) **U.S.A. MADE**
17	91-284	TAPPET ASSY. (OEM 18508-52A) JIMS MACHINING
18	91-286	SCREW ONLY **U.S.A. MADE**
19	95-700	O-RING (OEM 11100) **U.S.A. MADE**
20	–	CHROME HORSE® LIFTER BASE ALLEN SCREW KIT 1957/1984 STAINLESS STEEL. SOLD AS KIT
21	91-268	PUSHROD 1957 / 1985 SOLD AS PKG. OF FOUR
22	91-512	UPPER PUSHROD COVER SOLD FOUR PER KIT
23	91-321	SPRING **U.S.A. MADE**
24	91-322	WASHER **U.S.A. MADE** (OEM 6762B)

TOP END ENGINE PARTS FOR SPORTSTER® OHV 900CC, 1000CC & K MODEL 1957 THRU 1985

ALL PARTS SOLD EACH EXCEPT AS NOTED COMPLETE PUSHROD COVER KITS AVAILABLE

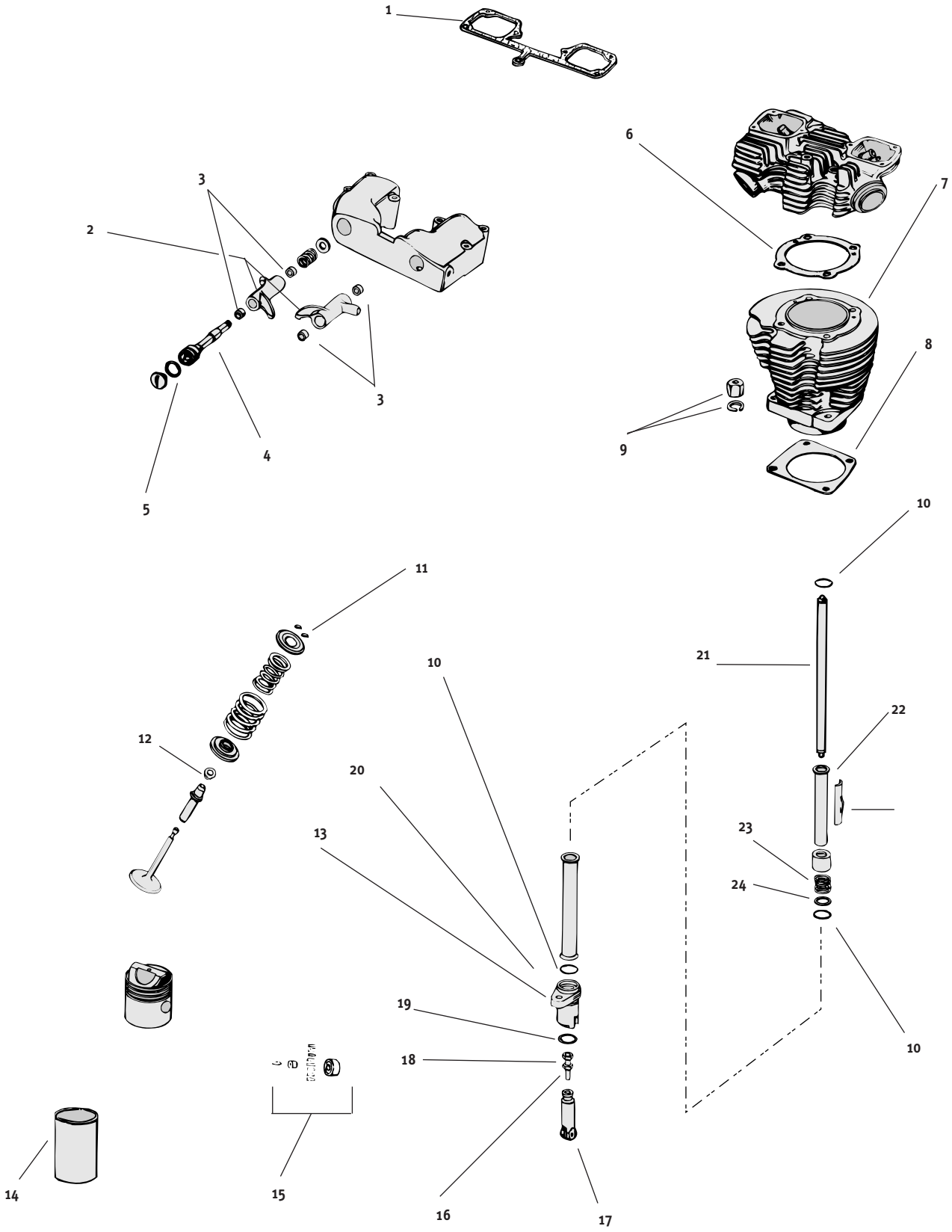

ULTIMA® CAM SHAFTS

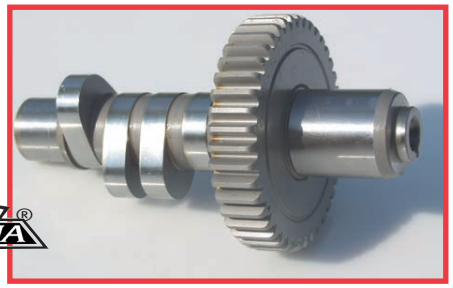

These are the grinds we use in all Ultima® engines to produce unmatched performance specifications. These grinds fit all Evolution® engines. SOLD EACH

114-68 Ultima® cam MW520 used in Ultima® 96 & 100 C.I. applications.
114-246 Ultima® cam MW248 used in Ultima® 107 C.I. applications.
114-245 Ultima® cam MW264 used in Ultima® 113, 120 & 127 applications.
114-81 Ultima® cam MW268 used in Ultima® 140 C.I. applications.

NOTE: All timing info @ .053 tappet lift using 1.625 rocker ratio.

PART NO.	GRIND	INTAKE OPEN/ CLOSE	EXHAUST OPEN/ CLOSE	DURATION INT./EXH.	LOBE CENTER INT./EXH.	VALVE LIFT @	OVER-LAP	TDC LIFT	LOBE SEP ANGLE
114-68	MW520	28/54	69/23	262/272	103/113	.520/.520	51°	.209/.194	108
114-246	MW248	18/50	54/18	248/252	106/108	.600/.580	36°	.181/.121	107
114-245	MW264	24/60	68/20	264/268	108/114	.625/.580	44°	.218/.200	111
114-81	EV81	32/60	66/30	272/276		.610/.610		.262/.244	

ANDREWS CAMS FOR EVOLUTION® BIG TWIN

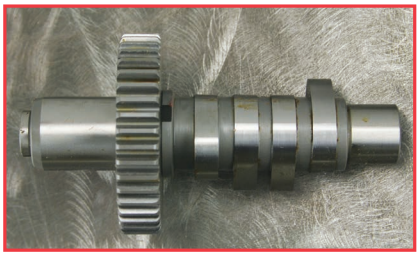

Performance cams mean extra power for Evolution® engines. Hydraulic lifters are capable of 6000+ rpm with stock springs and no valve float. Aluminum (T7) or chrome moly steel pushrods (both fully adjustable) are available to match any of Andrews' camshafts. Aluminum pushrods are lighter while the chrome moly steel pushrods are more rigid for high performance.

Also available are titanium upper valve spring collars to fit stock EV keepers & springs.

PART NO.	GRIND	TIMING	DURATION @ .53	DURATION @.020	LIFT	LIFT @ TDC	SPRINGS	APPLICATION
114-46	EV13	15/31 45/13	226 238	270 280	.485 .495	.161 .148	Stock	Bolt-in street/touring cam for heavy bikes. Much more mid-range and upper power than either stock cam.
114-52	EV27	20/36 44/16	236 240	270 274	.495 .495	.182 .166	Stock	Bolt-in street cam with fast open and close ramps. Similar timing to EV3 but designed to produce a very broad torque band. Pulls - 1500 to 6000 rpm.
114-27	EV3	21/37 43/15	238 238	280 280	.495 .495	.197 .159	Stock	Bolt-in street cam for light bikes (FXRS, etc.). Lots more mid-range and upper end power. Smooth idle, 6000 rpm cam with stock heads & springs.
114-48	EV46	25/41 49/17	246 246	283 283	.495 .495	.207 .197	Stock	Bolt-in performance cam with fast open & close ramps. Longer duration than EV3 but higher static compression pressure for 6000+ rpm.
114-56	EV23	10/30 40/8	220 228		.498 .498	.134 .121	Stock	**NEW.** Bolt-in intended for use in 80" Big Twin. Crisp throttle response and strong pulling power from 1500 to 6000 rpm. Excellent cam for heavy touring bikes and high geared bikes. Also works well in higher altitudes.
114-55	EV51	28/44 54/22	252 256	286 290	.510 .510	.233 .195	Stock	Easy installation with longer duration for modified street engines with hyd. lifters. Power range from 3000 - 6500 rpm.
114-53	EV59	26/46 56/24	256 260	290 394	.560 .560	.236 .208	Hi - Lift	Fast ramps for modified 80 to 88 inch motors. Use AP springs & collars. Very broad power band; 6000 rpm. OK for hyd. lifters.
114-54	EV72	30/54 60/28	264 268	298 302	.560 .560	.246 .230	Hi - Lift	For 92 in. + street motors. Use AP springs & titanium collars. Very broad power band; 2800 - 6000 rpm. OK for hyd. lifters.
114-81	EV81	32/60	272	306	.610	.262	Hi - Lift	For 80 - 88 in. , 10.5+ CR, head work,
		66/30	276	310	.610	.244	160 Lbs.	Broad nose quick ramps for wide torque band. 6500+RPM

(*) Timing listed at .053 cam lift.

ANDREWS CAMS FOR SHOVEL, PAN & KNUCKLE

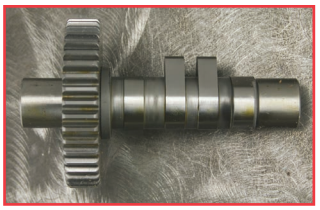

Whether you want a better street cam for a stock motor, a big lift cam for a dragster or something in between, Andrews Products can supply it. All of their H-D® cams are computer designed and precision ground from alloy steel billets. In 1988 Andrews continued the cams which are intended to be used with lower compression pistons. They are designed with a combination of shorter durations and higher lifts which offer the advantages of a broad torque output through the rpm range.

PART NO.	YEAR	GRIND	TIMING	DURATION @ .053	DURATION @ .020	VALVE LIFT		APPLICATION
				KNUCKLE ENGINE CAMS & "61" PAN CAMS				
114-26	1936/1947	N	14/42 42/14	236 236	270 270	.355 .355		New by popular demand. Stock replacement for Knuckle cam. For stock motors or restorations, this is the cam.
114-1	1936/1947	S	27/55 55/27	262 262	308 308	.370 .370		Bolt-in Knuckle performance cam for stock motors. Smooth idle, strong pull to 6000 rpm. This is the Knuckle equivalent of a "B" cam.
				CAMS FOR STREET & DRAG APPLICATIONS				
		Stock (front cyl.) H.D.	-6/46 44/20	220 244	256 282	.390 .390	.412 .176	Stock H-D® front cylinder timing listed for comparison.
		Stock (rear cyl.) H.D.	14/38 44/20	232 244	274 282	.390 .390	.412 .412	Stock H-D® rear cylinder timing listed for comparison.
114-14 **114-13** **114-4**	1948/1969 1970/1977 1978/1984	J	21/41 41/21	242 242	292 292	.405 .405	.425 .425	Mild street: Pans & Shovels, smooth idle, more power through rpm range. Bolts in with no head work
— **114-5** **114-2**	1948/1969 1970/1977 Late 1977/1984	A	21/43 43/21	244 244	296 296	.450 .450	.470 .470	Street/drags: Bolts into Shovels (except 1980 & 1981) with no head work. More mid range & high end power Idle smoothness unaffected.
114-49 **114-50** **114-51**	1948/1969 1970/1977 1978/1984	AB	21/43 50/26	244 256	286 300	.450 .450	.470 .470	**"A"** Intake and a long duration exhaust for cooler running & more high end power. Bolt in street cam (except 1980 & 1981). OK for hydraulic lifters.
114-8	1948/1969	B	26/50	256	298	.485	.507	Street/drags: Much more mid range & high end power. Idle smoothness unaffected. THE cam for modified 74/80 inchers & small strokers. Spring spacing required.
114-17 **114-15** **114-16**	1948/1969 1970/1977 1978/1984	BH	24/52 52/24	256 256	302 302	.450 .450	.470 .156	Hydraulic version of a **"B"** cam. Usually a bolt-in, but spring spacing may be required on 1980.
— — **114-38**	1948/1969 1970/1977 1978/1984	6	32/56 59/27	262 266	303 325	.510 .510	.535 .535	Upgrade of old #6. Great street cam for 84/88 inch strokers. Maximum torque comes on from 2200 to 6500 rpm.
114-9 **114-10** **114-18**	1948/1969 1970/1977 1978/1984	7	29/53 61/37	278 278	318 318	.525 .525	.550 .550	Best production cam made for big street engines. Strokers from 84 to 96 inches will really turn on with this cam. Broad torque range pulls from 2000-7000+ rpm.
				CAMS FOR LOW COMPRESSION PAN & SHOVEL ENGINES (LESS THAN 8:1)				
— — **114-154**	1948/1969 1970/1977 1978/1984	1	16/36 36/16	232 232	.427 SH/.450 PH .427 SH .427 SH			This is the low compression piston version of an "A" grind cam for 74 & 80 engines with low compression pistons.
— **114-156**	1948/1969 1970/1977	2	15/35 35/15	230 230	.490 SH/.512 PH .490 SH			This is the low compression version of a "B" grind cam. More power thru rpm range for engines with low compression pistons.

NOTE: For identification purposes, the following descriptions apply to years:
1983 & later: Evolution® engine.
1978 thru 1984: New Shovel & 1977 Low Rider.
1970 thru 1977: Alternator Shovel.
1966 thru 1969: Early Shovel.
1948 thru 1965: Pan.
1936 thru 1947: Knuckle.

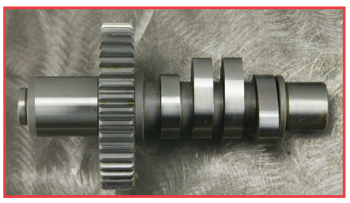

Knuckle cam. The two grinds made for this engine are described above.

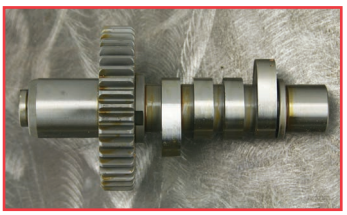

Cam for a 61 C.I. Pan engine.
Because of the unusual cam design these engines don't run well with a "74" Pan cam so Andrews makes stock replacement "61" cams.

ANDREWS CAMS FOR SPORTSTERS®



PART NO.	YEAR	GRIND	TIMING	DURATION @ .050	VALVE LIFT	APPLICATION
114-24	1971/1980	Y	35/47	262	.425	Street 900/1000: Biggest cam available for no headwork installation.
—	1981/1984		53/29	262	.425	(Some 1982 engines may require spring spacing). Stock springs OK.

NOTE 1: 1981 Thru 1984 cam gear kits differ only on the No. 4 cam which does **NOT** have a tachometer gear.
NOTE 2: Late 1984 & 1985 cam gear kits must be used on **ALL** engines **WITH** alternators.

ANDREWS CAMS FOR EVOLUTION® SPORTSTER®

ANDREWS

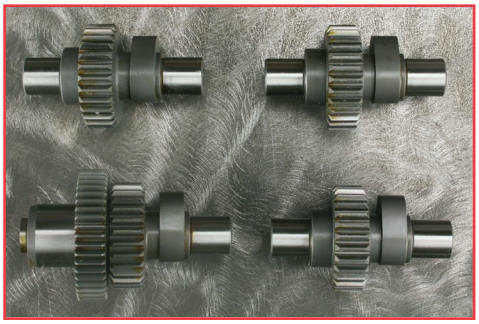

Andrews Products makes high performance cams for all EV Sportster® engines. All of the cams listed below will run to 6500 rpm with stock hydraulic lifters. Stock H-D® hydraulic lifters are such proven units, Andrews continues to recommend that they not be changed to solids. Andrews Products EV Sportster® cams have stock base circle sizes so stock (non-adjustable) pushrods can be used (except V9 or BV grinds). Adjustable aluminum or chrome moly steel pushrods are also available. NOTE: The #2 cam drive gear used in 2000 & later model year EV Sportster® cams uses 46 teeth; the 1991 thru 1999 #2 can gear has 36 teeth. Andrews pushrods and Andrews' titanium upper valve spring collars will fit ALL Evolution® 80 engines and ALL Evolution® Sportsters®. They will provide .050 more spring travel over stock collars and will install with stock keepers.

PART NO.	YEAR	GRIND	TIMING[1]	DURATION @ .053	DURATION @.020	VALVE LIFT	TDC LIFT	APPLICATION
Stock	1988/1991	D	02/41 41/02	223 223	270 270	.458 .458	.094 .094	Listed for comparison. **NOTE:** 1985 thru 1987 exhaust is .414.
—	1986/1990	V2	22/38	240	290	.465	.180	Bolt-in cams for stock 883, 1100 or 1200 engines. More duration & lift
— **114-89**	1991/1999 2000 & Later[2]	N2	46/18	244	290	.440	.155	means extra power thru rpm range. Stock springs & hyd. lifters recommended. 2000 - 6000 rpm.
—	1986/1990	V4	30/46	256	296	.490	.216	Street/drags: For stock or modified 883, 1100 or 1200. Slightly higher
— **114-90**	1991 /1999 2000 & Later[2]	N4	52/24	256	296	.490	.189	idle speed but stock springs & hyd. Lifters recommended. RPM range: 2000 - 6000.
114-45	1986/1990	V8	32/44	256	296	.490	.226	Modified 1100 - 1200, stroked 883's with stock springs & hyd. lifters.
— **114-91**	1991/1999 2000 & Later[2]	N8	56/28	264	302	.500	.121	Same intake cam as N4 but more exhaust cam duration. Great mid-range power: 2500 - 6500 rpm.
— **114-165**	1986/1990 1991/1999	V6 N6	34/50 56/28	264 264	302 302	.500 .500	.241 .212	Modified 1200s to 80" and/or high comp. pistons. Stock springs & hyd. lifters recommended. RPM range: 2500-6800.

NOTE 1: Timing listed for .053 lift figures.

NOTE 2: Model year 2000 & later Sportster® engines require a different #2 drive gear than 1991 thru 1999 engines.

6

ANDREWS

CAMS FOR CHAIN DRIVE TWIN CAM 88™ ENGINES

1999-2006 TWIN CAMS®, EXCEPT 2006 DYNA®

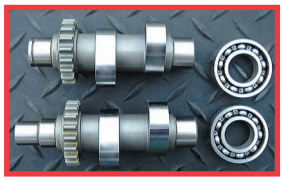

Want more power from your new 88 engine? Andrews Products has seven proven Twin Cam 88™ grinds for 2002 to get you there. More HP and torque for stock or modified engines is within easy reach. All cam grinds listed are designed for use with stock H-D® hydraulic lifters. Cam kits include one roller bearing, one ball bearing, and one cover gasket. For any bolt-in cam grind, EZ-Install pushrods do not require removal of gas tanks or rocker boxes for installation. **SOLD AS SET**

PART NO.	GRIND	TIMING*	DURATION @ .53	DURATION @.020	VALVE LIFT	LIFT @ TDC	SPRINGS	APPLICATION
Stock (carburetor)	(A)	-02/38 36/04	216 220	257 260	.473 .473	.072 .110	Stock	Carbureted engine; **stock cam data** listed for reference. (Stock engine output is approx. 62 HP)
Stock (injectors)	(B)	02/34 36/04	216 220	257 260	.473 .473	.087 .110	Stock	Fuel injected engine; **stock cam data** listed for reference. (Stock engine output is approx. 62 HP)
114-65	TW21	10/30 40/08	220 228	255 264	.498 .498	.134 .121	Stock	Bolt-in cam first introduced in 2000, more torque for all around riding with stock CR & heavy bikes. Similar to #23 cam for EV80. (1700 - 5200 RPM)
114-57	TW26a	11/35 41/09	226 230	262 266	.490 .490	.129 .112	Stock	Bolt-in cam for low RPM torque, FLT, etc. For two up touring, this cam will add more torque & HP at lower & middle. (1800 - 5500 RPM)
		TW21 CAMS WORK WELL WITH FUEL INJECTION OR CARBURETORS						
114-58	TW37b	14/42 48/12	236 240	272 276	.510 .510	.151 .140	Stock	Twin 88's with this bolt-in cam grind have shown 80+ rear wheel HP. Smooth idle, broad torque band. (2200 - 5800 RPM)
		TW26a CAMS WORK WELL WITH FUEL INJECTION OR CARBURETORS						
114-69	TW31S	10/46 52/08	236 240	272 276	.510 .510	.151 .140	Stock	New for 2002! Got a supercharger for your TC88™? This is a 37b cam with supercharger timing. When too much is just about right. (1800 - 5800 RPM)
		TW37b CAMS WORK WELL WITH FUEL INJECTION OR CARBURETORS						
114-70	TW50	20/48 54/18	248 252	283 287	.510 .510	.184 .168	Stock	Designed in 1999 for easy installation in 95 inch motors with 9.25 CR and stock heads. (2500 - 6000 RPM)
114-67	TW55	22/46 52/20	248 252	283 292	.550 .550	.197 .181	HI-LIFT	High lift variation of the TW50; this cam is best for 95 inch engines with 9.5+ CR. Max torque & HP at middle and higher RPM. (2600 - 6300+ RPM)
114-60	TW60a	24/56 58/22	260 260	296 296	.560 .560	.205 .205	HI-LIFT	For a well prepped street engine with 95 C.I. & head work, 100+ HP is within reach. (2700 - 6500+ RPM max torque range.)

(*) Timing and duration listed for .053 cam lift.

ANDREWS

CAMS FOR GEAR DRIVE TWIN CAM 88™ ENGINES

1999-2006 TWIN CAMS®, EXCEPT 2006 DYNA®

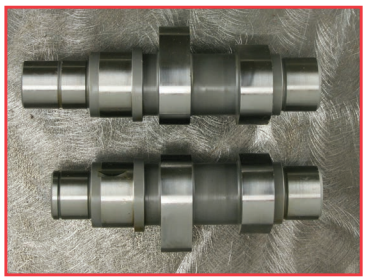

Andrews Twin Cam 88™ camshafts are available with S&S® gear drives. Gear driven cams use less engine power than stock chains. If less power is needed to run the camshafts, more power gets to the rear wheel.

WHAT YOU NEED TO ORDER

If updating from the stock chain drive system, order: one set cams, w/inner gears and part Outer Cam Drive Gears. Refer to chart for cam part number. If installing a gear drive style cam set from another cam manufacturer, and the kit does not include inner cam gears. For either above installation we recommend part No. **114-221** Cam Installation Kit.

(*) Timing and duration listed for .053 cam lift.

WITHOUT GEAR	GRIND	TIMING*	DURATION @ .53	DURATION @.020	VALVE LIFT	LIFT @ TDC	SPRINGS	APPLICATION
114-72	21G	10/30 40/08	220 228	255 264	.498 .498	.134 .121	Stock	Bolt-in cam first introduced in 2000, more torque for all around riding with stock CR & heavy bikes. Similar to #23 cam for EV80. (1700 - 5200 RPM)
		21G CAMS WORK WELL WITH FUEL INJECTION OR CARBURETORS						
114-74	26G	11/35 41/09	226 230	262 266	.490 .490	.129 .112	Stock	Bolt-in cam for lower RPM torque, FLT, etc. For two up touring, this cam will add torque & HP at lower & middle ranges. (1800 - 5500 RPM)
		26G CAMS WORK WELL WITH FUEL INJECTION OR CARBURETORS						
114-76	37G	14/42 48/12	236 240	272 276	.510 .510	.151 .140	Stock	Twin 88's with this cam grind show 80+ rear wheel HP. Smooth idle, broad torque band. Same grind as TW37b but with gear drive. (2200 - 5800 RPM)
		37G CAMS WORK WELL WITH FUEL INJECTION OR CARBURETORS						
114-80	50G	20/48 54/18	248 252	283 287	.510 .510	.184 .168	Stock	Designed in 1999 for easy installation in 95 inch motors with 9.25 CR and stock heads. (2500 - 6000 RPM)
114-82	55G	22/46 52/20	248 252	283 292	.550 .550	.197 .181	HI-LIFT	Great cam for 95 inch engines with 9.5 CR. Max torque & HP at mid and upper RPM. (2600 - 6300+ RPM)
114-84	60G	24/56 58/22	260 260	296 296	.560 .560	.205 .205	HI-LIFT	For a well prepped street engine with 95 C.I. & head work, 100+ HP is within reach. (2700 - 6500+ RPM max torque range.)
114-86	59G	29/57 63/27	266 270	303 307	.590 .590	.238 .218	HI-LIFT	Great cams for gear drive 95 inchers with 10:1 CR or higher. Max torque &HP at middle & upper ranges. (2400 - 6200+ RPM)
114-88	64G	30/62 68/32	272 276	307 312	.640 .640	.262 .232	HI-LIFT	High lift cams for modified 95 inch motors running 10:1 CR or higher. Heads must be set for .700 lift and modified for max air flow. (3000 - 6500+ RPM)

6

PERFORMANCE CAMS (2007 - UP) TWIN CAMS AND '06 DYNAGLIDE

ANDREWS

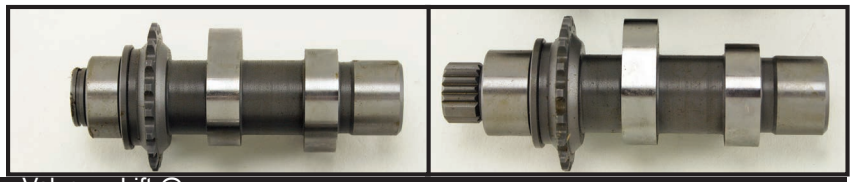

Part#	Grind	Timing(*)	CL	Duration .053	Duration .020	Valve Lift	Lift @ TDC	Springs	Application
114-96*	67H	24/48 58/22	102 108	252 260	287 297	.570 .570	.209 .1871	Hi-Lift	Performance Cams for 96-110 plus inches, 10.0 to 10.5 CR, with high flow head set up. (2600-6400+ RPM)
114-97	21H	10/30 40/08	100 106	220 228	255 264	.498 . .498	134 .121	Stock	Bolt-in cam: '07 - up. More torque for all around riding with heavy bikes, stock compression ratios and stock pistons. Similar to #23 cam for EV80. (1700-4800 RPM).
114-98	48H	13/29 43/15	98 104	222 238	257 273	.548 .548	.153 .163	Stock	Broad tip cams for Baggerswith stock motors: max torque at low and mid RPM's.

(*) Timing and duration listed for .053 cam lift.

MILWAUKEE-EIGHT Performance M8

ANDREWS

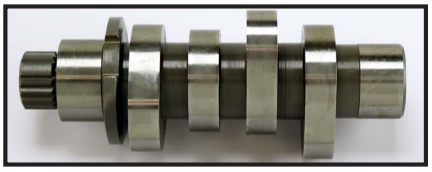

Part#	Grind	Timing(*)	CL	Duration .053	Duration .020	Valve Lift	Lift @ TDC	Springs	Application
114-803	M460	00/20	100	200	233	.460	.080	Stock	Want more power from a stock engine? This is the cam for you with improved torque curves
		38/02	108	220	258	.460	.086		
114-804	M504	06/30	102	216	249	.504	.105	Hi-Lift	More torque and power for bigger engines 114 inches and all round riding (1500-5700 RPM)
		56/00	118	236	274	.504	.080		

TWIN 88 CAM DRIVE SPROCKET KIT

ANDREWS

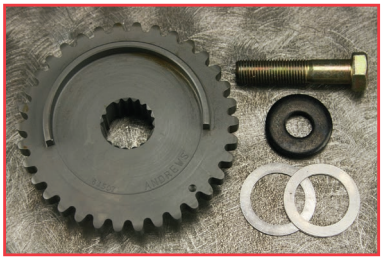

6

Andrews now offers heat treated steel cam drive sprockets with involute splines (All 2000 Twin Cam 88™ engines use splined drive cam sprockets.) Three spacer shims are included along with a grade 8 bolt and hardened washer.

New sprockets can be set up to the same length specs as original stock sprockets. If you are into performance, steel sprockets are a must even with stock camshafts. New splined 34T cam sprockets will fit all stock model year 2000 Twin Cam 88™ rear camshafts.

114-63 34T Cam drive sprocket kit; splined.

CAM SHIMS FOR BIG TWIN 1936 THRU 1999

QTY.	OEM NO.	MIDWEST PART NO.	DESCRIPTION
1	25550-36	**98-374**	.050
1	25551-36	**98-375**	.055
1	25552-36	**98-376**	.060
1	25553-36	**98-377**	.065
1	25554-36	**98-378**	.070
1	25555-36	**98-379**	.075
1	25556-79	**98-380**	.080
1	25557-79	**98-381**	.085
1	25558-79	**98-382**	.090
1	25559-79	**98-383**	.095
	N/A	**98-384**	.100



98-373 Assorted pack of **U.S.A. MADE** cam shims sizes .050 thru .100. SOLD AS PKG

Camshafts for Converting '99-'06 Engines to 2007 Style Cam Chain Drives.



Complete Kit is Shown For Information Only

Eliminate old style chain adjusters! Conversion camshafts fit all 1999-2006* twin cam engines. New '07 style chain adjusters operate with engine oil pressure to maintain proper cam chain tension. Andrews Products conversion camshafts are available for any 1999-2006 Twin Cam engine!

Stock HD camshafts can't be used for 2007 style roler chain conversions! Andrews "N" cams can not be installed with Screaming Eagle cam support plates: HD part numbers: 25284-08 or 25284-11

The following parts must be purchased from a local HD dealer or Midwest Motorcycle Supply to complete the conversion camshaft installation:

OEM #	Description	Midwest #
26037-06	Oil pump	**98-507**
25355-06	Cam support plate	
4741A	Plate mounting screws	
11461	Retaining ring (front cam)	
25683-06	Inner chain	
39968-06	Chain tensioner	
4740A	Tensioner mounting screws	
25675-06	Outer chain	
39969-06	Chain tensioner	
942	Outer chain mounting screws	
25673-06	Pinion sprocket (17 teeth)	
25244-99A	Outer cover gasket	**77-720**
25728-06	Rear cam sprocket 34 teeth ('02-'06)*	

*ALL '99-'01 engines MUST use Andrews rear cam sprocket number 216015 to permit engine alarm warning light to operate correctly. Two alignment spacers will also be needed. Front cam spacer (.100) is part #25729-06. Other spacers are available from HD® from .100 thick to .150 thick in .010 increments.

Midwest # 98-710 thru 98-715.

See Next Page for Cam Part Numbers . . .

Camshafts for Converting '99-'06 Engines to 2007 Style Cam Chain Drives.

ANDREWS

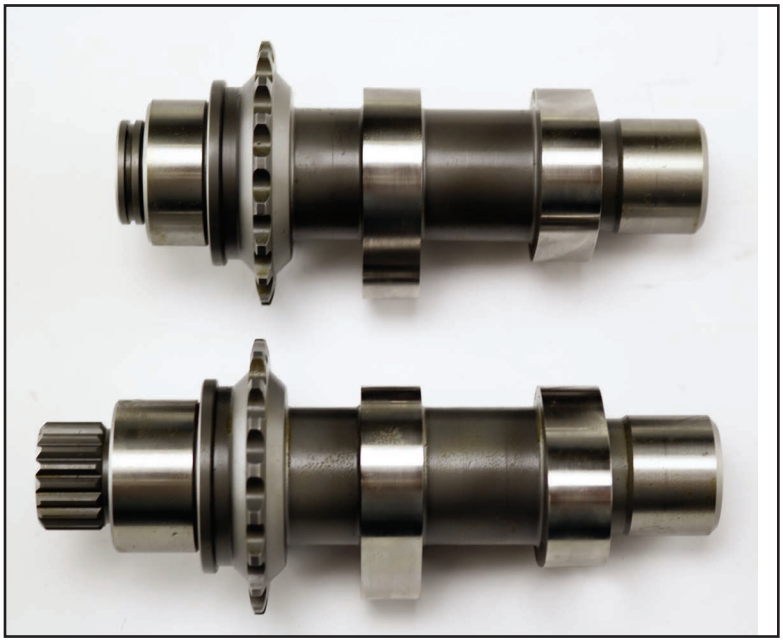

Camshafts on all 1999-2006 H/D 88 engines (except 2006 Dyna) can be updated to new style roller chain drives. Cam grinds listed below are designed for stock H/D hydraulic lifters. The '07 style chain drives are much more efficient and durable than old style chain tensioners. EZ-install pushrods are available from Andrews Products. EZ-install pushrods do not require removal of gas tanks or rocker boxes when installing bolt-in camshafts.

Part#	Grind	Timing(*)	CL	Duration .053	Duration .020	Valve Lift	Lift @ TDC	Springs	Application
Stock 88 Carburetors	(A)	-02/38 42/-03	110 112.5	216 219	255 259	.473 .474	.072 .110	Stock	Stock cam data listed for '99-'06 carbureted engines. (Stock engine output is approximately 62 HP).
Stock 88 Injectors	(B)	02/34 42/-03	106 112.5	216 219	255 259	.473 .474	.087 .110	Stock	Stock cam data listed for '99-'06 fuel injected engines. (Stock engine output is approximately 62 HP).
114-344	21N	10/30 40/08	100 106	220 228	255 264	.498 . .498	134 .121	Stock	Bolt-in cam: More torque for all around riding with heavy bikes, stock compression ratios and stock pistons. Similar to #23 cam for EV80. (1700-4800 RPM).
114-345	26N	11/35 41/09	102 106	226 230	262 266	.490 .490	.138 .120	Stock	Bolt-in cam 88-95 inches and stock compression ratio. Great for two up touring, this cam will add torque and HP at lower and middle RPM ranges. (1800-5200 RPM).
114-346	31N	10/46 52/08	108 112	236 240	272 276	.510 .510	.131 .120	Stock Lower	Great cam for motors with 95 inches and 9.8 to 10.2 CR. TDC lift for easy installation. Similar to TW37 with different timing. (2400-5600 RPM).
114-347	37N	18/38 46/14	100 106	236 240	272 276	.510 .510	.174 .148	Stock	Hot street cams for 88 or 95 inches. 80+ rear wheel HP possible with well tuned 88 incher, more with 95. Smooth idle, broad torque (2200-5600 RPM). 9.0 to 9.5 CR.
114-348	48N	13/29 43/15	98 104	222 238	257 273	.548 .548	.153 .163	Hi-lift	New in 2010: New design, broad tip cams for baggers with stock motors: max torque at low and mid RPMs.
114-349	54N	16/42 43/15	103 104	238 238	273 273	.555 .555	.165 .158	Hi-lift	New grind in 2008: Great cam for 95 inches with 10:1 CR. RPM range: 2200-5600. Added as a conversion cam choice by popular demand.
114-350	50N	20/48 54/18	104 108	248 252	283 287	.510 .510	.184 .168	Stock	Designed for easy installation in 95 inch motors with stock heads and 9.5 to 9.8 CR. (2400 to 6000 RPM).
114-342	55N	22/46 52/20	102 106	248 252	283 292	.550 .550	.197 .181	Hi-lift	Great cam for 95 inchers with 9.8 to 10.2 C.R. Max HP - torque at mid and upper RPMs (2600 to 6200).
114-351	57N	18/38 46/14	100 106	236 240	270 274	.560 .560	.184 .153	Hi-lift	New in 2014: Broad tip cams for big torque: 88 & 95 inch engines - to 9.8 C.R. Max torque: 2200 - 5600 RPM.
114-343	67N	24/48 58/22	102 108	252 260	287 297	.570 .570	.209 .187	Hi-lift	Performance cams for 95-107+ inches, 10.0 to 10.8 C.R. with high flow head setup. (2600-6400+ RPM).

(*) Timing and duration listed for .053 cam lift.


89-368



89-366

A. *CHROME CAM & SPROCKET COVER FOR 04'-UP XL*

Chrome cam & sprocket cover for 04'-up XL's.

89-366 Chrome cam cover only, 04'-up XL. SOLD EACH
89-368 Chrome sprocket cover, 04'-up XL



88-53

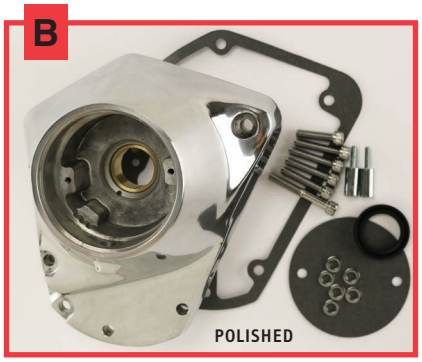

88-55

B. *CAM COVER FOR BIG TWIN*

Chrome plated cam cover (nosecone) for end oiling pinion shaft.

88-53 Fits 1973 thru 1992. Replaces OEM 25258-80B and 25268-84A. Chrome SOLD EACH
88-55* Fits 1973 thru 1992. Replaces OEM 25258-80B and 25268-84A. Polished SOLD EACH
88-70 Fits 1993 & later. Replaces OEM 25266-93A. SOLD EACH
41-131 Chrome allen cam cover screw kit for 1993 & later Big Twin V2. SOLD AS KIT

6



88-70

C. *TWIN CAM® CAM COVER IN CHROME & BLACK*

Cam covers (nosecone) for end oiling pinion shaft. Comes with gasket and hardware.

88-90 Cam cover for Twin Cam® '01 & later, chrome. SOLD EACH
88-91 Cam cover for Twin Cam® '01 & later, black. SOLD EACH

Cam cover bolt kits.

40-586 TC® Cam cover bolt kit. Smooth allen head screws w/ washers. SOLD AS KIT
40-589 TC® Cam cover bolt kit. Knurled allen head screws w/ washers. SOLD AS KIT

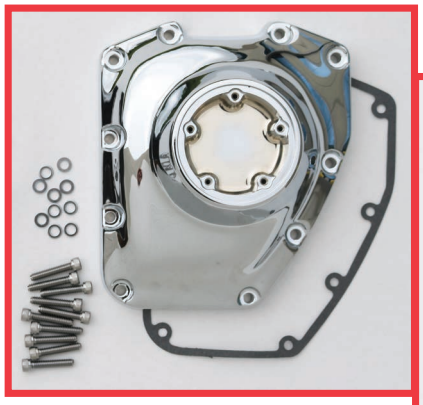

88-90


88-91

D. *TWIN CAM® CAM BEARINGS*



95-620 Inner cam bearing for use on 1999 - 2005 Twin Cam®. 2 used per motor.Replaces OEM 9198.
95-804 Inner cam bearing for use on 2006 & later Dyna, 2007 & later Twin Cam®. 2 used per motor. Replaces OEM 9215.

E. *TC88™ CAM GEAR DRIVE INSTALLATION KITS FOR S&S® AND ANDREWS CAMS*

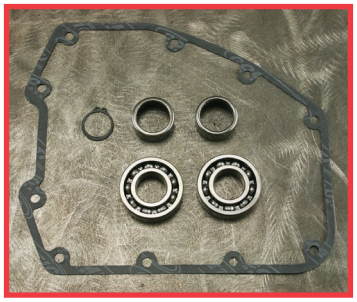

114-221 **Gear Drive Installation Kit.** Gasket & bearings shown are necessary to complete the installation of **Gear Drive** camshafts. SOLD AS KIT

A. *TWIN CAM® CHAIN GUIDE*

5-262 Fits all models Twin Cam® 1999-2006. SOLD EACH

B. *TWIN CAM® CHAIN TENSIONER*

77-910 Chain tensioner pad & pin for Twin Cam® SOLD EACH

C. *TWIN CAM® CHAIN TOOL*

77-909 Cam chain tensioner shoe installation & removal tool SOLD EACH

D. *TWIN CAM® HYDRAULIC REPLACEMENT SHOE*

77-911 2006 Hydraulic replacement shoe.

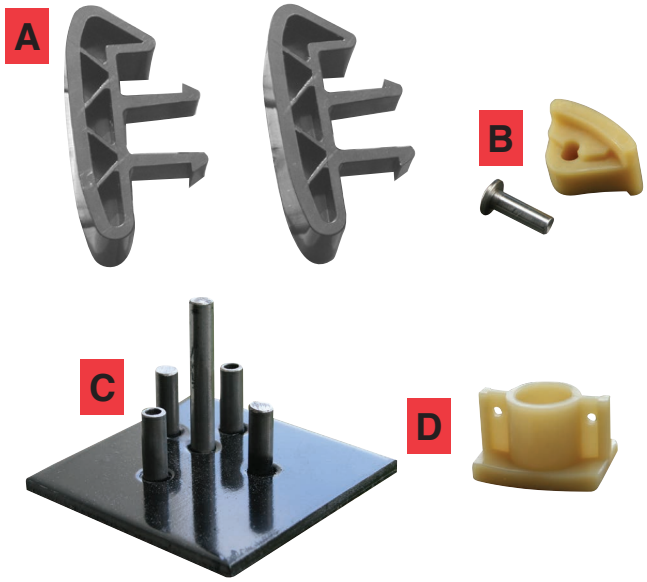

E. *CAM DRIVE SPROCKET SPACERS FOR TWIN® CAM 06 -16*

Spacers sold in packs of 5.

MIDWEST PART NO.	Size	OEM NO.
98-710	0.100"	25729-06
98-711	0.110"	25731-06
98-712	0.120"	25734-06
98-713	0.130"	25736-06
98-714	0.140"	25737-06
98-715	0.150"	25738-06



F. *BALANCE SHAFT SPACER KIT FOR TWIN® CAM B MOTORS*

Spacers sold in packs of 5.

MIDWEST PART NO.	Size	OEM NO.
98-700	0.130"	14780-00
98-701	0.140"	14781-00
98-702	0.150"	14782-00
98-703	0.160"	14783-00
98-704	1.170"	14784-00
98-705	1.180"	14785-00
98-706	1.190"	14786-00
98-707	1.200"	14787-00
98-708	1.210"	14788-00



G. *COUNTERBALANCE SHAFT BEARINGS FOR TWIN CAM® B MOTORS*

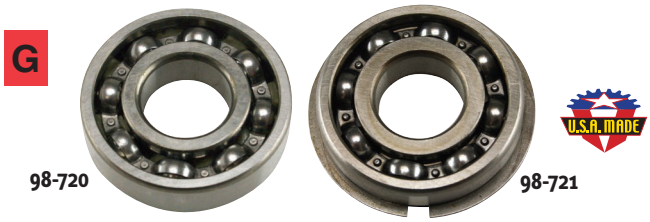

High quality replacement bearings.
98-720 Left side, OEM 8989
98-721 Right side, OEM 8991

H. *THRUST WASHER FOR TWIN CAM® CRANCASE MAIN BEARING*



Sold in 10 Packs
98-722 For 03-16 Twin Cam, OEM 8972

A. *TWIN CAM® LEFT SIDE SPROCKET SHAFT BEARING KIT*

Kit includes 2 thrust washers (OEM 8972), 1 bearing, (OEM 24605-07), 1 retaining ring (OEM 35114-02) & 1 bearing race (OEM 24004-03)

95-990 Sprocket shaft bearing kit. SOLD AS KIT

INDIVIDUAL COMPONENTS

95-905 Bearing, pinion, sprocket. OEM 24605-07 SOLD EACH
95-992 Bearing race, sprocket shaft. OEM 24004-03 SOLD EACH
95-993 Retaining ring. OEM 35114-02 SOLD EACH
95-994 Thrust washer, crankcase main. OEM 8972 SOLD EACH




95-905


95-992

A




95-994

6

B. *TWIN CAM® "A" PINION SHAFT BEARING*

For 1999 - 2002 Twin Cam® A, right side.

98-279 Pinion shaft bearing. OEM 24623-99. SOLD EACH

B


98-279

C. *PINION CONVERSION KIT*

For use with taper style pinion shafts in non taper crankshaft applications. 90'-later Big Twin.

Includes part#'s: (1) 98-359, (2) 98-305, (1) 98-89, (1) 98-588 (red) & (1) 98-302.

98-570 Pinion conversion kit. SOLD AS KIT

C

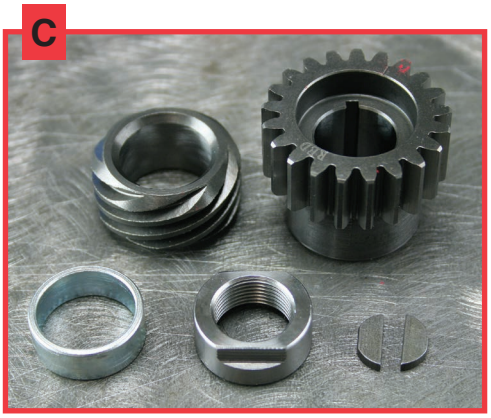

D. *PINION GEARS FOR BIG TWIN*

ULTIMA® PINION GEARS

FOR LATE 1977 THRU 1989

98-586 Replaces OEM 24041-78-White.
98-587 Replaces OEM 24042-78-Yellow.
98-588 Replaces OEM 24043-78-Red.
98-589 Replaces OEM 24044-78-Blue.

D


98-587

A. *OIL PUMP GEARS*



98-358 DRIVEN GEAR

98-359 DRIVE GEAR

Top quality replacement oil pump gears for H-D® Big Twin. SOLD EACH

IMPORT	OEM NO.	YEAR	DESCRIPTION
98-358	26345-73	1973/1995	Driven gear, 24T.
98-359	26349-73 26349-73A 26349-84	1954/1989	Drive gear, 6T. Use only with 24T driven gear.

B. *BIG TWIN STEEL BREATHER VALVE GEARS*

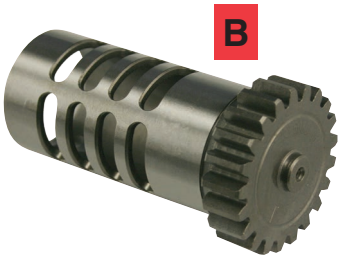

MIDWEST PERFORMANCE BREATHER VALVE GEARS
1215 Steel material holds up better than the stock plastic gears, and are less likely to damage the case. Improves breathing capacity. Outperforms the stock plastic unit — a must for any performance engine.

YEARS	REPLACES OEM NO.	SIZE	MIDWEST
Late 1977 & later	25313-77A, B	Std.	**98-512**
Late 1977 & later	25313-77A, B	+.030	**98-812**

SOLD EACH

6

C. *U.S.A. MADE BREATHER VALVE GEAR SHIM SPACERS*

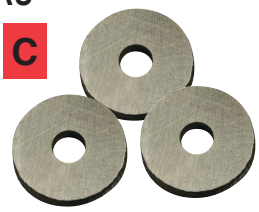

Fits all Big Twins with steel breather valve.

98-74 Set for 1950 thru early 1979.Includes one of each size below. "Small hole." SOLD AS SET
98-75 .110. OEM 25316-52. SOLD EACH
98-76 .115. OEM 25313-50. SOLD EACH
98-77 .120. OEM 25314-50. SOLD EACH
98-78 .125. OEM 25315-50. SOLD EACH
98-79 Set for late 1979 thru 1982. Includes .110 thru .145 size. Also used on all breather valves above. "Large hole." SOLD AS SET
98-80 .110. OEM 25320-79. SOLD EACH
98-81 .115. OEM 25321-79. SOLD EACH
98-82 .120. OEM 25322-79. SOLD EACH
98-83 .125. OEM 25323-79. SOLD EACH
98-84 .130. OEM 25325-79. SOLD EACH
98-85 .135. OEM 25326-79. SOLD EACH
98-86 .140. OEM 25327-79. SOLD EACH
98-87 .145. OEM 25328-79. SOLD EACH
98-88 .150. SOLD EACH

D. *CAM SHIMS FOR BIG TWIN 1936 THRU 1987*



QTY.	OEM NO.	MIDWEST PART NO.	DESCRIPTION	
1	25550-36	**98-374**	.050	INDIVIDUAL SHIMS SOLD EACH
1	25551-36	**98-375**	.055	
1	25552-36	**98-376**	.060	
1	25553-36	**98-377**	.065	
1	25554-36	**98-378**	.070	
1	25555-36	**98-379**	.075	
1	25556-79	**98-380**	.080	
1	25557-79	**98-381**	.085	
1	25558-79	**98-382**	.090	
1	25559-79	**98-383**	.095	
	N/A	**98-384**	.100	

98-373 Assorted pack of **U.S.A. MADE** cam shims sizes .050 thru .100. SOLD AS PKG

E. *PINION GEAR T-KEY*

98-532 T-Key for pinon gear. Fits Big Twin 1990 thru 1999. OEM 11219. SOLD AS PKG. OF TEN

F. *TWIN CAM 88® CAM BEARING*

95-620 Inner cam bearing for use on 1999-2005 Big Twin. 2 used per motor. Replaces OEM 9198
95-804 Inner cam bearing for use on 2006 & later Big Twin. 2 used per motor. Replaces OEM 9215

PISTONS, CONNECTING RODS & FLYWHEEL PARTS FOR 61", 74", & 80" SIDE VALVE & OHV

ALL MODELS AND ALL YEARS

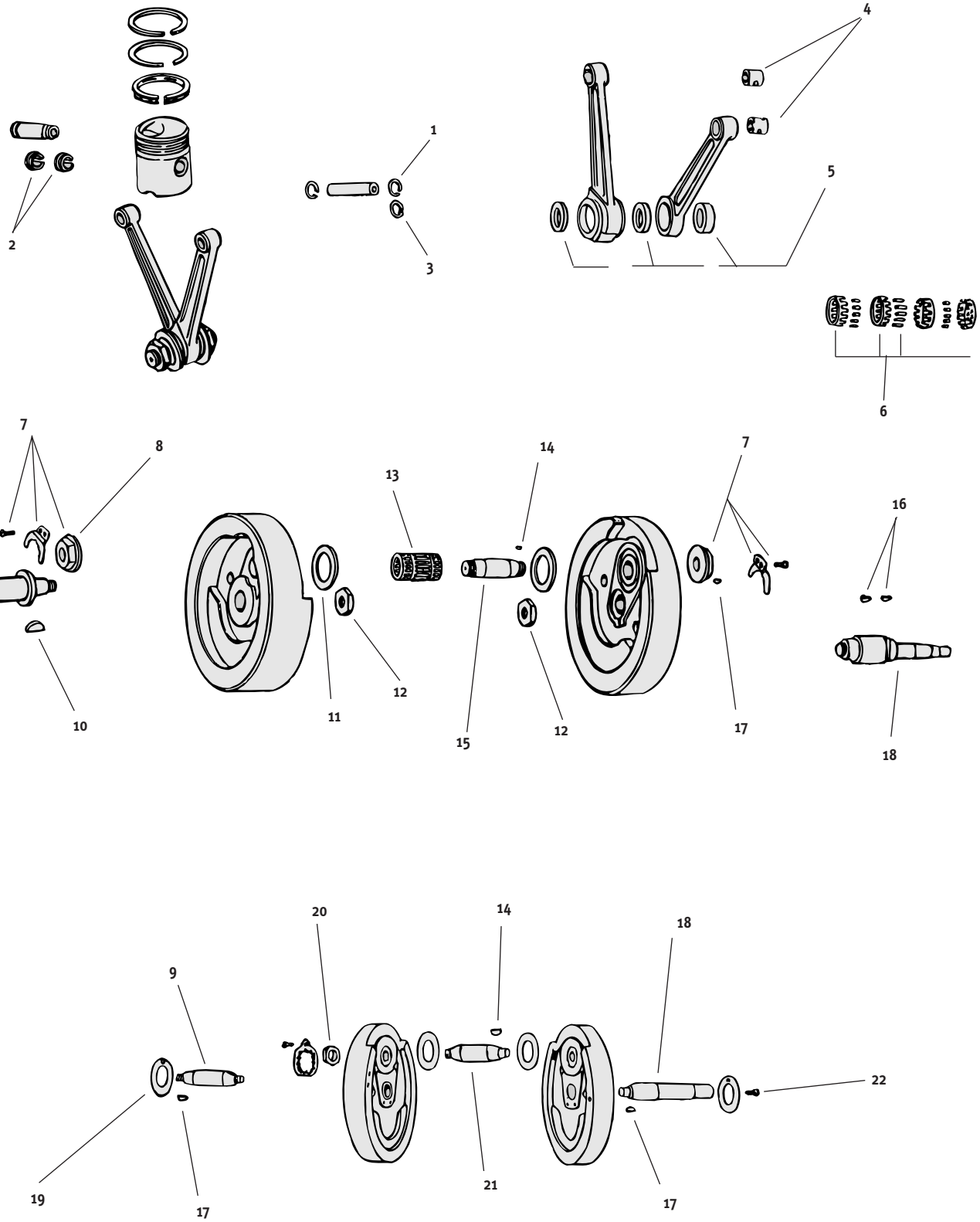

PISTONS, CONNECTING RODS & FLYWHEEL PARTS FOR 61", 74", & 80" SIDE VALVE & OHV
ALL MODELS AND ALL YEARS

ALL PARTS SOLD EACH EXCEPT AS NOTED.

1	93-221	SPIRAL TYPE CIRCLIP FOR 1973 / 1977. (OEM 22582-52)
2	93-362	CIRCLIP FOR 1937 / 1972. (OEM 22581-32)
3	93-422	RETAINING RING FOR 1978 & LATER. (OEM 22588-78)
4	—	PISTON PIN BUSHING
5	95-163	JIMS MACHINING ROD RACES. SET OF THREE
	95-165	ROD RACES. SET OF THREE
	95-167	RACE, SINGLE ROD. (OEM 24356-36A)
6	95-344	RETAINER SET, LATE STYLE ALUMINUM. SOLD AS SET
7	98-303	CRANK PIN NUTS, LOCKS & SCREWS FOR 1941 / EARLY 1981. 1" - 18. **U.S.A. MADE**. 6 PIECES. SOLD AS KIT
8	98-288	CRANK PIN NUT FOR 1941 / EARLY 1981. (OEM 23966-54A) 1" - 18.
	98-421	CRANK PIN NUT FOR 1983 & LATER. JIMS. (OEM 23969-83) 1"-20.
9	98-264	SPROCKET SHAFT FOR 1956 / 1964. JIMS.
	98-285	SPROCKET SHAFT FOR 1930 / 1954. (OEM 24001-30)
	98-293	SPROCKET SHAFT FOR 1965 / 1969. JIMS.
	98-294	SPROCKET SHAFT FOR 1970 & 1971. JIMS.
	98-295	SPROCKET SHAFT FOR 1972 / EARLY 1981. (OEM 24001-72)
	98-339	SPROCKET SHAFT FOR LATE 1981 / EARLY 1985. JIMS.
10	94-137	KEY FOR 1956 & LATER. **U.S.A. MADE** (OEM 23985-56)
11	98-271	FLYWHEEL WASHER FOR 1941 / EARLY 1970. **U.S.A. MADE** (OEM 23973-41)
	98-298	FLYWHEEL WASHER FOR 1970 / 1979. (OEM 6506)
12	98-423	SPROCKET SHAFT NUT FOR LATE 1981 / EARLY 1985. **U.S.A. MADE** (OEM 24017-80) 1-1/8" - 16.
	98-424	PINION AND SPROCKET SHAFT NUT FOR 1930 / EARLY 1981. **U.S.A. MADE** (OEM 24023-36) 3/4" - 18.
	98-422	PINION SHAFT NUT FOR LATE 1981 / 1989. (OEM 24016-80) 3/4" - 20.
13	95-259	ROLLERS & RETAINER SET, LATE STYLE ALUMINUM, STD. SIZE. (OEM 24385-40B) SOLD AS KIT
14	98-273	KEY FOR 1941 / EARLY 1981. **U.S.A. MADE** (OEM 23985-18)
	98-475	KEY FOR LATE 1981 & LATER. **U.S.A. MADE** (OEM 11218)
15	98-255	IMPORTED CRANK PIN FOR 74" & 80", FOR 1941 / EARLY 1981. (OEM 23961-41)
	98-257	IMPORTED CRANK PIN FOR BIG TWIN LATE 1981-1999. (OEM 23961-80A)
	98-664	**U.S.A. MADE** CRANK PIN FOR 74" & 80", 3 OIL HOLE, FOR 1941 / EARLY 1981. (OEM 23961-41)
	98-465	CRANK PIN FOR 74" & 80", 1 OIL HOLE, FOR 1941 / EARLY 1981. JIMS. (OEM 23961-41)
	98-418	**U.S.A. MADE** CRANK PIN FOR 74" & 80", 180° FOR 1941 / EARLY 1981. JIMS.
	98-419	**U.S.A. MADE** CRANK PIN FOR BIG TWINS LATE 1981 & LATER. JIMS. (OEM 23961-80 & 80A) REQUIRES CRANK PIN NUTS LATE 1983 MIDWEST PART NO **98-421**. 1"-20. 180° 3 OIL HOLE.
	98-537	**U.S.A. MADE** JIM'S CRANK PIN, 1981-1999 EVO, ULTIMA® & S&S® ENGINES - 2 HOLE - INCLUDES CRANK PIN, 2 CRANK PIN NUTS, AND 1 11218 WOODRUFF KEY.
	98-354	**U.S.A. MADE** CRANK PIN FOR BIG TWINS LATE 1981 & 1999. JIMS. (OEM 23961-80 & 80A) REQUIRES CRANK PIN NUTS LATE 1983 MIDWEST PART NO. **98-421**. 1" - 20. 3 OIL HOLE IN LINE.
	98-344	**U.S.A. MADE** CRANK PIN FOR 74" & 80", 3 OIL HOLES IN LINE, FOR 1941 / EARLY 1981. JIMS. (OEM 23961-41)
	98-584	**U.S.A. MADE** JIM'S CRANK PIN, 1941-E81 - 3 HOLE IN LINE - INCLUDES CRANK PIN, 2 CRANK PIN NUTS, AND 1 23985-18 WOODRUFF KEY. **SOLD AS KIT**
16	98-305	KEY FOR 1954 & LATER. **U.S.A. MADE** (OEM 23985-54)
17	98-274	KEY FOR 1936 / 1953. (OEM 23985-12)
18	98-256	GEAR SHAFT FOR 1958 / 1972. JIMS.
	98-286	GEAR SHAFT FOR 1939 / 1953 OHV (OEM 24007-39)
	98-289	GEAR SHAFT FOR 1955 / 1957. JIMS.
	98-291	GEAR SHAFT FOR 1973 / EARLY 1981. JIMS.
	98-355	GEAR SHAFT FOR LATE 1981 / EARLY 1986. JIMS. (OEM 24006-80 & 24006-83) **NOTE:** LATE 1981 / EARLY 1983 REQUIRES THE LATE 3/4" - 20 NUT H-D® NO. 24016-80.
	98-546	GEAR SHAFT FOR SINGLE CAM 1981 / 1999. SAME AS ABOVE **98-355** BUT HAS LONGER BUSHING NOSE FOR USE WITH OEM 1993 CAM COVER AND JIMS CAM COVER. ALSO HAS A LARGER OIL PUMP DRIVE KEY SLOT. PINION SHAFT DESIGNED TO USE WITH AFTERMARKET STROKER FLYWHEELS. USE WITH JIMS PINION GEARS AND OIL PUMP DRIVE GEAR. SHAFT INCLUDES A METERING OIL PLUG INSTALLED.
	98-427	GEAR SHAFT FOR 1987 / 1989. JIMS. (OEM 24006-87)
	98-320	GEAR SHAFT FOR 1937 / 1948 SIDE VALVE. JIMS. (OEM 24006-37)
19	98-276	COMPLETE SET OF FLYWHEEL THRUST WASHERS FOR 1929 / 1954. 11 PIECES. ONE WASHER THINNER & ONE THICKER THAN STOCK SET. CONTAINS ONE EACH OF .060, .066, .070, .074, .078, .082, .086, .090, .094, .098 ,AND .102. **U.S.A. MADE**. (OEM 24110-17) SOLD AS SET
20	98-314	CRANK PIN NUT FOR 61" & 80" SIDE VALVE. **U.S.A. MADE** (OEM 23966-36)
21	98-346	**U.S.A. MADE** CRANK PIN FOR 74" & 80" SIDE VALVE. (OEM 23962-40)
22	98-312	SCREW. JIMS MACHINING. (OEM 24020-51)

PISTONS, CONNECTING RODS & FLYWHEEL PARTS FOR SPORTSTER®/K MODELS ALL YEARS

ALL PARTS SOLD EACH EXCEPT AS NOTED

1	93-221	SPIRAL TYPE CIRCLIP FOR K/SPORTSTER® 1952/EARLY 1977 (OEM 22582-52)
2	93-422	RETAINING RING 1977 & LATER (OEM 22588-78)
3	95-114	PISTON PIN BUSHING K/SPT.® 1952 & LATER. **U.S.A. MADE** (OEM 24331-36)
	95-393	PISTON PIN BUSHING FOR XL .010 O.S.
4	98-333	CRANK PIN NUT FOR 1954/EARLY 1981. **U.S.A. MADE**
	98-420	CRANK PIN NUT FOR LATE 1981 & LATER. JIMS
5	98-265	COMPLETE CONNECTING ROD ASSY. FOR 1954/EARLY 1981. INCLUDES BOTH RODS, RACES, CRANK PIN WITH NUTS, PISTON PIN BUSHINGS RETAINERS & ROLLERS
6	98-345	U.S.A. MADE CRANK PIN KH/SPORTSTER® 1954/EARLY 1981 JIMS (OEM 23960-54)
	98-361	U.S.A. MADE CRANK PIN KH/SPORTSTER® LATE 1981 & LATER. JIMS (OEM 23960-80)
	98-347	IMPORTED CRANK PIN FOR SPORTSTER® LATE 1981-1999 (OEM 23960-80A)
7	95-164	ROD RACES. SET OF THREE
8	95-258	ROLLERS & RETAINERS FOR K/SPORTSTER®. STD. (OEM 24370-52A)
	95-345	ALUMINUM RETAINER SET ONLY
9	98-300	SPROCKET SHAFT NUT FOR 1957/1969. **U.S.A. MADE** (OEM 8025)
	98-336	SPROCKET SHAFT NUT FOR SPORTSTER® 1970 & LATER. **U.S.A. MADE** (OEM 40387-70)
10	98-318	SPROCKET SHAFT FOR 1957/1976 **U.S.A. MADE** (OEM 24000-57)
	98-301	SPROCKET SHAFT FOR 1977/EARLY 1981 **U.S.A. MADE** (OEM 24000-75)
	98-425	SPROCKET SHAFT FOR LATE 1981/1985 **U.S.A. MADE** (OEM 24000-80)
11	98-274	KEY U.S.A. MADE (OEM 23985-12)
12	98-330	WASHER FOR 1957/1971 **U.S.A. MADE** (OEM 23972-57)
	98-298	WASHER FOR 1972/EARLY 1986 (OEM 6506)
13	98-273	KEY FOR KH/SPORTSTER®. **U.S.A. MADE** (OEM 23985-18)
14	98-363	NUT FOR GEAR & SPROCKET SHAFT 1954/EARLY 1981 **U.S.A. MADE** (OEM 8011)
15	98-319	GEAR SHAFT 1957/1976 JIMS (OEM 24005-57)

PISTONS, CONNECTING RODS & FLYWHEEL PARTS FOR SPORTSTER®/K MODELS ALL YEARS

ALL PARTS SOLD EACH EXCEPT AS NOTED

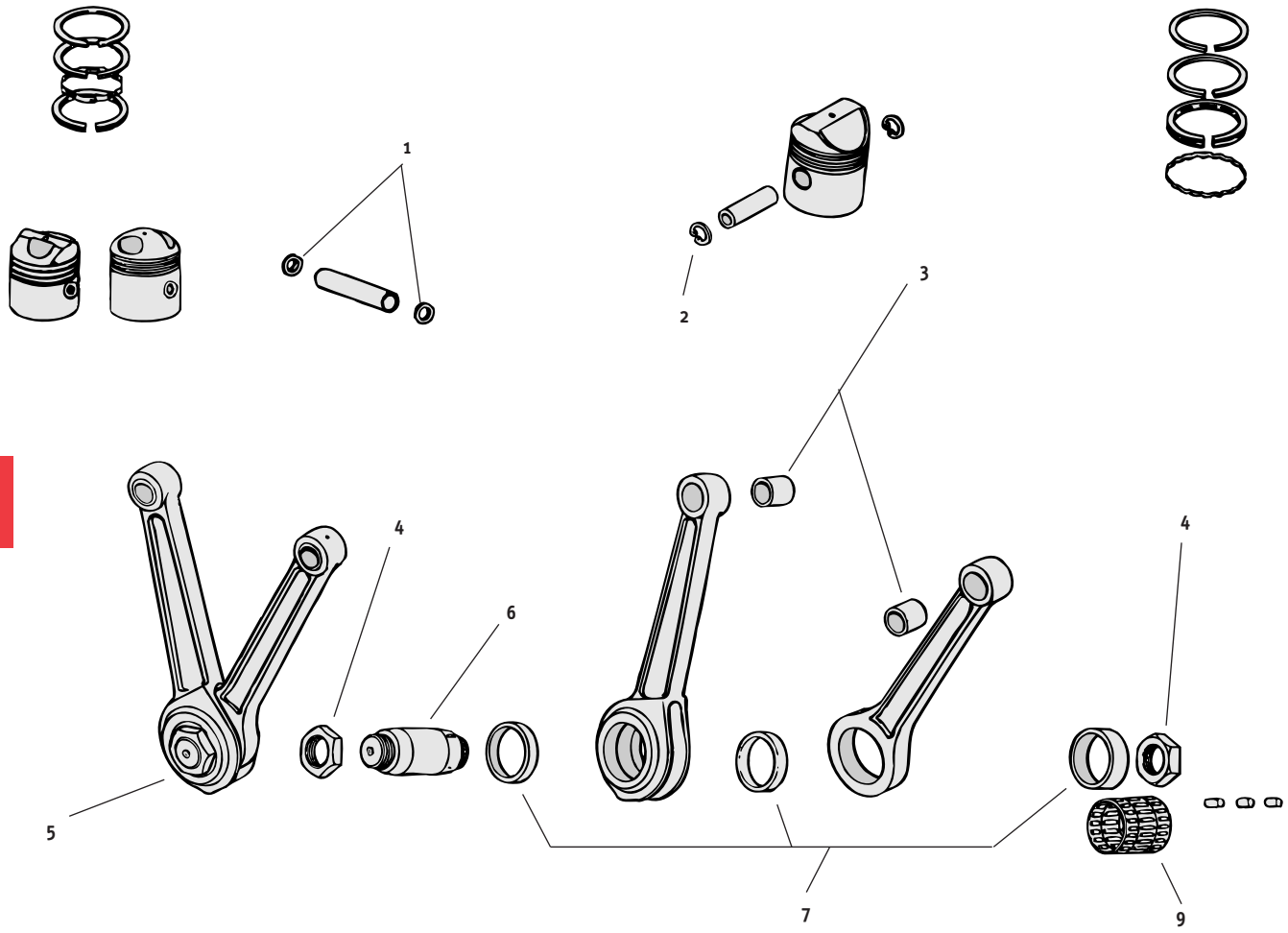

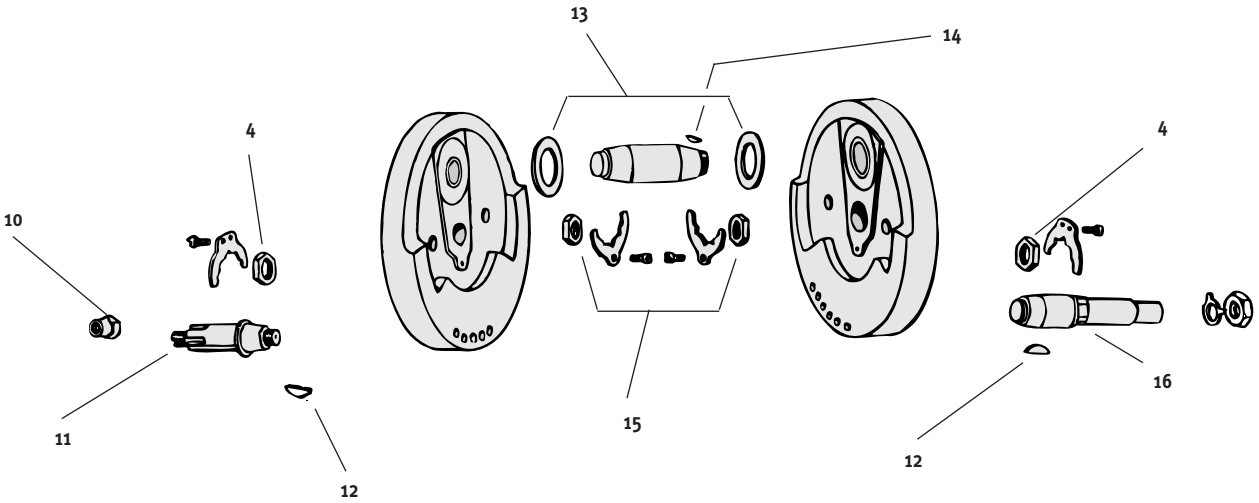

PISTONS, CONNECTING RODS AND FLYWHEEL PARTS FOR H-D® 45" SIDE VALVE
ALL MODELS & YEARS, SOLO & SERVI-CAR

ALL PARTS SOLD EACH EXCEPT AS NOTED ALL PARTS MEET OR EXCEED OEM SPECIFICATIONS

1		HASTINGS PISTON RINGS INCLUDES TWO 1/16" COMPRESSION RINGS & ONE 3/16" CHROME 3-PIECE OIL RING. FOR G & GE 1950 / 1965, K, KH & KHK 1955 & 1956, WITH 2.745" BORE. **U.S.A. MADE** SOLD AS PAIR FOR TWO PISTONS
	93-354	STANDARD SIZE PISTON RINGS
	93-355	.010 OVERSIZE PISTON RINGS
	93-356	.020 OVERSIZE PISTON RINGS
	93-357	.030 OVERSIZE PISTON RINGS
	93-358	.040 OVERSIZE PISTON RINGS
	93-359	.050 OVERSIZE PISTON RINGS
	93-360	.060 OVERSIZE PISTON RINGS
	93-361	.070 OVERSIZE PISTON RINGS
2	**93-221**	SPIRAL TYPE CIRCLIP 1956 & LATER (OEM 22582-52)
3	**95-114**	PISTON PIN BUSHING 1932 & LATER (OEM 24331-36)
4	—	PISTON, RINGS, PIN & CIRCLIP ASSY. 1932 & LATER. SOLD EACH FOR ONE PISTON
5	**98-274**	SPROCKET SHAFT / GEAR SHAFT KEY **U.S.A. MADE** (OEM 23985-12)
6	**98-317**	SPROCKET SHAFT **U.S.A. MADE** (OEM 24009-29)
7	—	CRANK PIN (OEM 23960-29)
8	**93-362**	PINLOCK 1932 / 1955 (OEM 22581-32)
9	**98-273**	CRANK PIN KEY **U.S.A. MADE** (OEM 23985-18)
10		ROLLERS & RETAINERS. SOLD AS SET
	95-198	STANDARD SIZE
11	**98-321**	GEAR SHAFT 1937 / 1954. JIMS (OEM 24005-37)

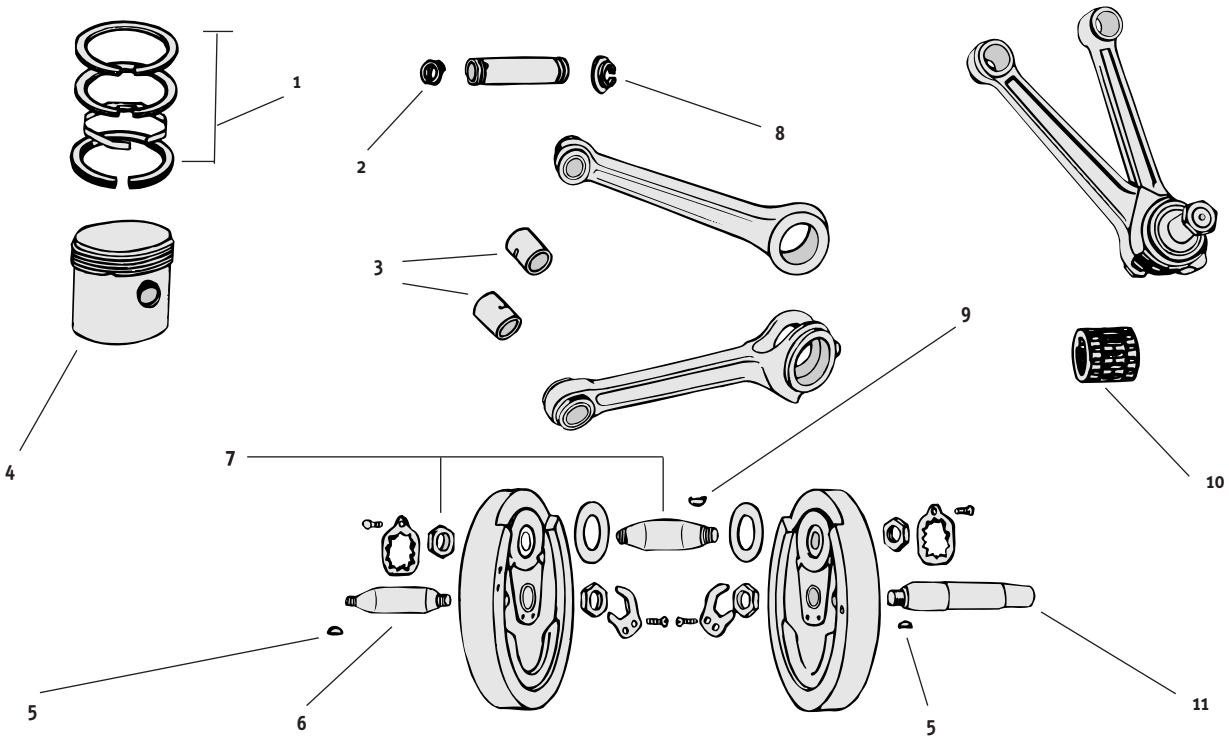

U.S.A. MADE PINION BEARING ASSEMBLY FOR BIG TWIN

1987 & LATER

U.S.A. MADE precision bearing for late model Big Twins. Consult service manual for color codes and fitting specifications.

SOLD EACH

95-602 Pinion bearing, White. OEM 24626-87.
95-603 Pinion bearing, Green. OEM 24628-87.
95-604 Pinion bearing, Red. OEM 24641-87.
95-605 Pinion bearing, Blue. OEM 24643-87.

ROD ROLLERS

SPORTSTER® WITH ALUMINUM CAGES

LONG ROLLERS: For use on Sportster® 1954 & later (17 used). Standard: 3/16" x .480.

PART NO. EACH	PART NO. QTY 100	SIZE	OEM NO.
95-275			.002 o.s.

CRANK CASE ROLLERS

BIG TWIN: For right crank case of 1937 thru 1954 OHV, and 1937 thru 1948 side valve (12 used). Standard: 1/4" x .600.

PART NO. EACH	SIZE	OEM NO.
95-219	.Std	9261
95-220	.0002 o.s.	9262
95-292	.0004 o.s.	9263
95-293	.0006 o.s.	9264
95-294	.0008 o.s.	9265
95-295	.001 o.s.	9266



CAM/GEAR CASE PARTS FOR 61, 74 & 80 C. I. OHV ALL YEARS & MODELS

ALL PARTS SOLD EACH EXCEPT AS NOTED

ALL PARTS MEET OR EXCEED OEM SPECIFICATIONS ALSO AVAILABLE COMPLETE ASSORTMENT OF DECORATIVE NUTS & BOLTS IN SECTION 14

1	**91-310**	STUD & BUSHING KIT FOR 1936 THRU 1969. **U.S.A. MADE** (OEM 25791-36)
2	**98-480**	IDLER GEAR FOR 1936 THRU 1969 WITH LIGHTNING HOLES. (OEM 25775-36)
3	—	GEAR SPACER FOR 1936 THRU 1969. (OEM 25800-36) USE TWO
4	**98-332**	RETAINING RING. **U.S.A. MADE** (OEM 25810-15)
5	**78-377**	GASKET. **U.S.A. MADE** (OEM 25225-36, C)
6	**95-418**	STUD & BUSHING FOR 1936 THRU 1969. JIMS. (OEM 25856-36)
7	**95-71**	CAM BUSHING. **U.S.A. MADE** (OEM 25597-36)
8	**98-302**	GEAR SHAFT NUT FOR 1954 THRU 1989. **U.S.A. MADE** (OEM 24023-54)
	98-458	GEAR SHAFT NUT FOR 1990 THRU 1992. **U.S.A. MADE**(OEM 24022-90)
9	**95-334**	BUSHING. (OEM 25582-36)
10	**98-487**	CAM COVER DOWEL PIN FOR 1930 & LATER. (OEM 275) USE TWO
11	**95-108**	BUSHING. **U.S.A. MADE** (OEM 25581-36)
12	—	CIRCUIT BREAKER AND INTERMEDIATE DRIVE GEAR FOR 1936 THRU 1969. (OEM 25850-36A)
13	**95-343**	BUSHING. JIMS. (OEM 25785-30A)
14	**41-780**	TIMING COVER ALLEN HEAD SCREW KIT. CHROME. COLONY.
15	**95-173**	NEEDLE BEARING. (OEM 9058)
16	**98-372**	CAM LOCKWASHER FOR 1958 & LATER. **U.S.A. MADE**(OEM 25550-57)
17	**98-89**	SPACER FOR 1954 THRU 1989. **U.S.A. MADE** (OEM 24703-54)
18	**95-342**	FOR 1954 THRU EARLY 1973. **U.S.A. MADE** (OEM 25582-54)
19	**95-340**	BUSHING. **U.S.A. MADE** (OEM 25581-70)
20	—	CHROME HORSE® STAINLESS STEEL TIMING COVER ALLEN SCREW KIT FOR SHOVEL & EVOLUTION®, 1971 & LATER. SOLD AS KIT
21	**95-222**	OIL SEAL, SINGLE LIP. (OEM 83162-51)
23	**98-305**	KEY. **U.S.A. MADE** (OEM 23985-54)
24	**95-341**	BUSHING FOR LATE 1973 THRU 1992. **U.S.A. MADE** (OEM 25582-73)
	95-454	BUSHING FOR 1993 & LATER. **U.S.A. MADE** (OEM 25582-93)
25	**88-53**	CHROME PLATED CAM COVER (NOSECONE) FOR 1973 THRU 1992. FOR END OILING PINION. INCLUDES ALLEN SCREWS, GASKET AND LOCATING DOWEL SHAFT. REPLACES OEM 25258-80B & 25268-84A
	88-70	CHROME PLATED CAM COVER (NOSECONE) FOR 1993 & LATER FOR END OILING PINION SHAFT. INCLUDES LOCATING DOWEL. DOES NOT INCLUDE ALLEN SCREWS OR GASKET. REPLACES OEM 25266-93A.

6

A. BIG TWIN CRANKCASE OIL SCREEN & SPRING

98-510 Oil screen only. Replaces OEM 24981-70. **SOLD EACH**
Fits into crankcase and strains the oil going to the tappets on all 1970 thru 1999 Big Twin.

98-511 Spring only. Replaces OEM 24982-70. **SOLD EACH**
For 1970 thru 1999 Big Twin.

A



98-510



98-511

U.S.A. MADE

B. TWIN CAM® OIL PUMP SCREENS

98-513 Twin Cam® oil pump screens. Kit includes two screens, installation tool & instructions. **SOLD AS KIT**

B



CAM/GEAR CASE PARTS FOR 61, 74 & 80 C. I. OHV ALL YEARS & MODELS

1936/1957

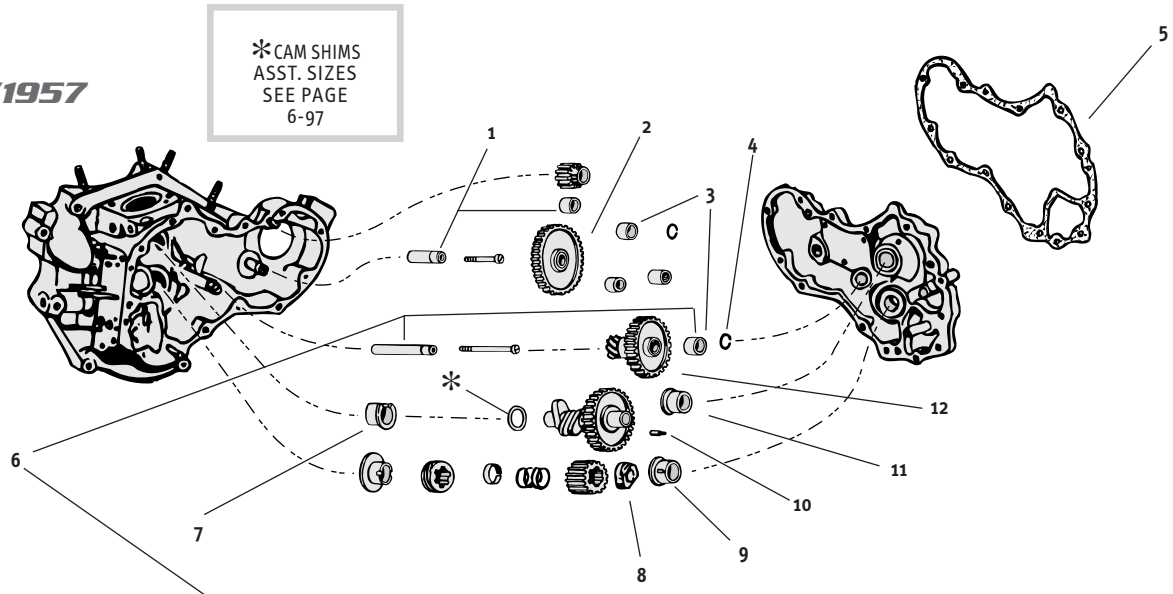

1958/1969

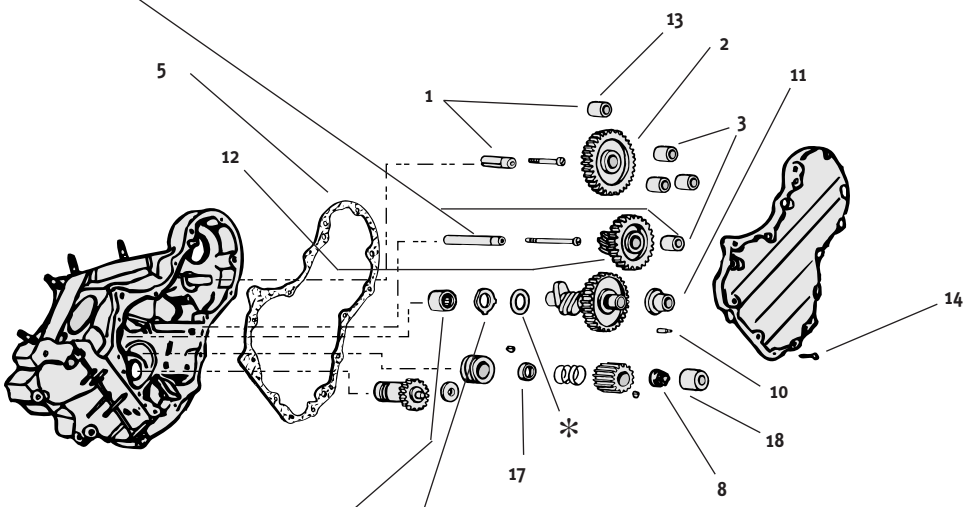

1970 & LATER

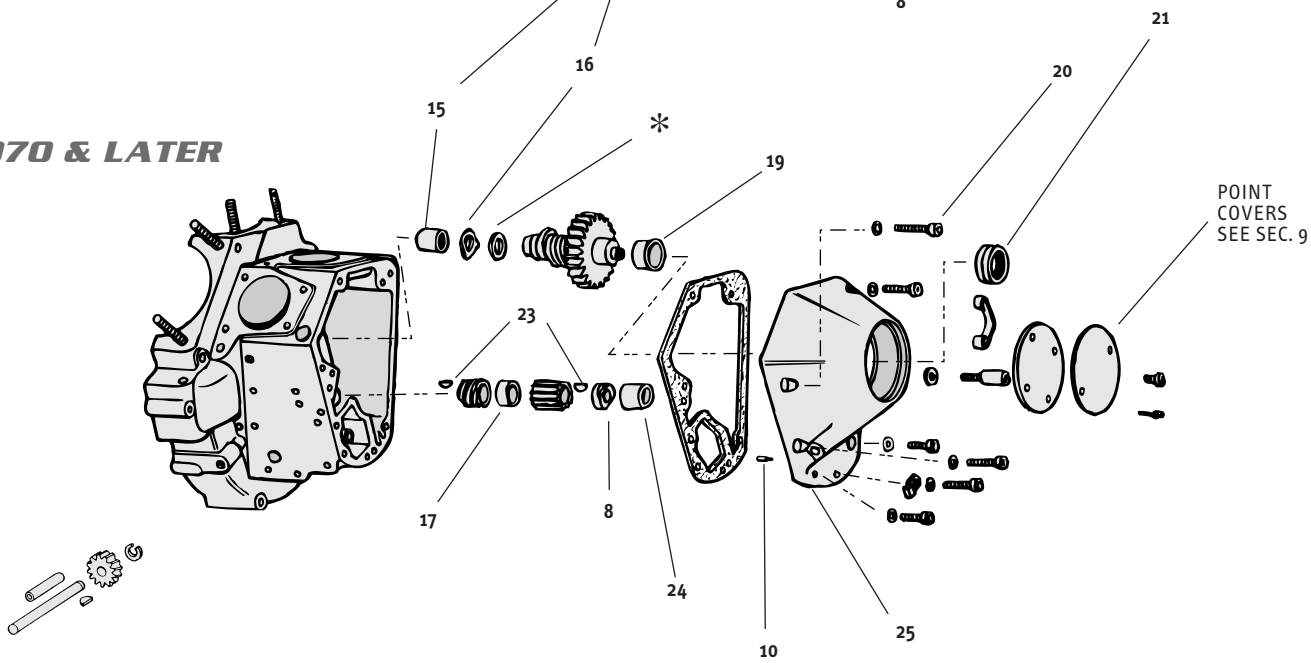

A. ULTIMA® CONNECTING RODS SOLD AS SET

These connecting rod sets have been designed with the H-beam shape long used in many types of racing. These rods are made from 4140H steel making them stronger than most aftermarket rods and by design 10% - 15% lighter. If you're building a stock Big Twin or a performance engine, then reducing the rotating & reciprocating weight will increase horsepower and engine life.

98-571 7.440" Rod set finished with crank pin, nuts and rod bearings with alloy cages and 0.792 pin bore. Fits Evolution® Big Twins 1984 & later.
98-572 7.440" Rod set finished with crank pin, nuts and rod bearings with alloy cages and 0.791 pin bore. Fits Big Twins 1941 thru 1980. **NOTE:** On most OEM flywheel castings clearancing is required for rear rod to counter weight.
98-573 7.440" Bare rod set —unfinished ends, 0.7918" dia. wrist pin bore & 1.6256" dia. crank pin bore.
98-574 7.670" Bare rod set —unfinished ends 0.9273" dia. wrist pin bore & 2.1040" dia. crank pin bore.
98-575 7.700" Bare rod set (see **98-574**).
98-578 8.000" Bare rod set (see **98-574**).



B. MIDWEST'S ROD ASSEMBLIES FOR BIG TWIN & SPORTSTER®

Rod set includes new rods, 3 hole crank pin, cages,standard rod rollers, crank pin nuts and piston pin bushings honed for stock pins. Made in Japan. All parts meet or exceed OEM specifications.

BIG TWIN

98-262 Fits 1941 thru 1973. OEM 24281-41A. SOLD AS SET
98-323 Fits 1974 thru early 1981. OEM 24281-74.
98-413 Fits late 1981 thru early 1983. OEM 24281-80.
98-414 Fits late 1983 and later, including Evolution®. OEM 24281-83A.

SPORTSTER®

98-265 Fits 1954 thru early 1981. OEM 24275-57. SOLD AS SET
98-478 Fits late 1981 thru 1985. OEM 24275-80A.
98-479 Fits 1986 & later. OEM 24275-86A.



C. ROD RACES

These critical engine parts are made from the highest quality bearing material available. Machined from 52100 aerospace quality Timken® bearing stock. Outside diameter is ground to within .0005" for a precision press fit into the connecting rod. Circularity and concentricity are held within .001".

95-163 Jim's Machining rod races for Big Twin 1941 & later. Replaces OEM 24345-36A & 24356-36A. SOLD AS SET OF 3

Imported races. Excellent Japanese quality.

95-165 For Big Twin 1941 & later. Replaces OEM 24345-36A & 24356-36A. SOLD AS SET OF 3
95-164 For Sportster® 1957 & later. Replaces OEM 24352-52A & 24341-52A.



A



B



6

A. *SPROCKET SHAFT SPACERS FOR TIMKEN BEARING SET*

U.S.A. MADE SPROCKET SHAFT SPACERS ARE USED TO SET CORRECT PRE-LOAD TO LEFT TIMKEN BEARING SET.

BIG TWIN 1969 & LATER

MIDWEST PART NO.	OEM NO.	DESCRIPTION	INDIVIDUAL SPACER SHIMS SOLD EACH
98-386	9110	.0905 - .0895	
98-387	9120	.0925 - .0915	
98-388	9121	.0945 - .0935	
98-389	9122	.0965 - .0955	
98-390	9123	.0985 - .0975	
98-391	9124	.1005 - .0995	
98-392	9125	.1025 - .1015	
98-393	9126	.1045 - .1035	
98-394	9127	.1065 - .1055	
98-395	9128	.1085 - .1075	
98-396	9129	.1105 - .1095	
98-397	9130	.1125 - .1115	
98-398	9131	.1145 - .1135	
98-399	9132	.1165 - .1155	
98-400	9133	.1185 - .1175	
98-401	9134	.1205 - .1195	

98-402 Assortment package of sixteen. **SOLD AS PKG.**

SPORTSTER® 1977 & LATER

MIDWEST PART NO.	OEM NO.	DESCRIPTION	INDIVIDUAL SPACER SHIMS SOLD EACH
98-403	9142	.100	
98-404	9143	.102	
98-405	9144	.104	
98-406	9145	.106	
98-407	9146	.108	
98-408	9147	.110	
98-409	9148	.112	
98-410	9149	.114	
98-411	9155	.098	

98-412 Assortment package of nine. **SOLD AS PKG.**

B. *SPROCKET SHAFT SPACERS FOR BIG TWIN 1970 THRU 1984*

U.S.A. MADE sprocket shaft spacers.

INDIVIDUAL SPACER SHIMS SOLD EACH

MIDWEST PART NO.	OEM NO.	DESCRIPTION
98-366	24032-70	.060
98-367	24033-70	.090
98-368	24034:70	.120
98-369	24035-70	.150
98-370	24036-70	.180
98-371	24037-70	.210

MOTOR SPROCKET SHAFT SPACER

MIDWEST PART NO.	Size	APPLICATION	OEM NO.
98-360	___	70-99 BIG TWIN MODELS (Except Twin Cam)	24002-70
98-960	1.096"	99-02 FLT MODELS	24008-99
98-961	0.890"	99-00 SOFTAIL, 99-02 DYNA	24038-99
98-962	0.983"	01-02 SOFTAIL	24039-01A
98-963	1.431"	03-06 SOFTAIL	24039-03
98-964	1.537"	03-07 FLT, FLHT, FLHX, FLHR, FLTR,	24008-03
98-965	___	07-16 SOFTAIL,06-16 DYNA, 08-16 FLHT, FLHX, FLHR, FLTR w/ Timken Bearing sleeve conversion	11887
98-966	1.565"	07-16 SOFTAIL, 06-16 DYNA, 08-16 FLH, FLHX, FLHR, FLTR	24009-06

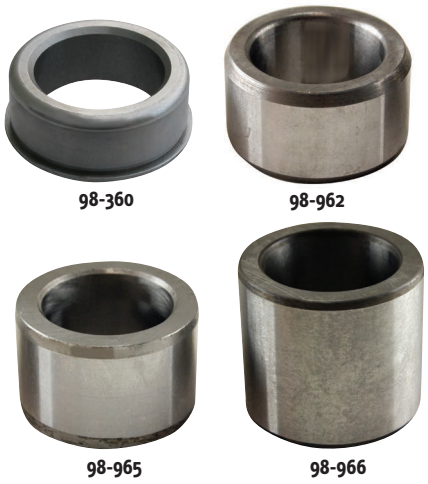

CRANKCASE & GEAR/CAM CASE PARTS FOR 45 C. I. SOLO AND SERVI-CAR ALL YEARS & MODELS

ALL PARTS SOLD EACH EXCEPT AS NOTED

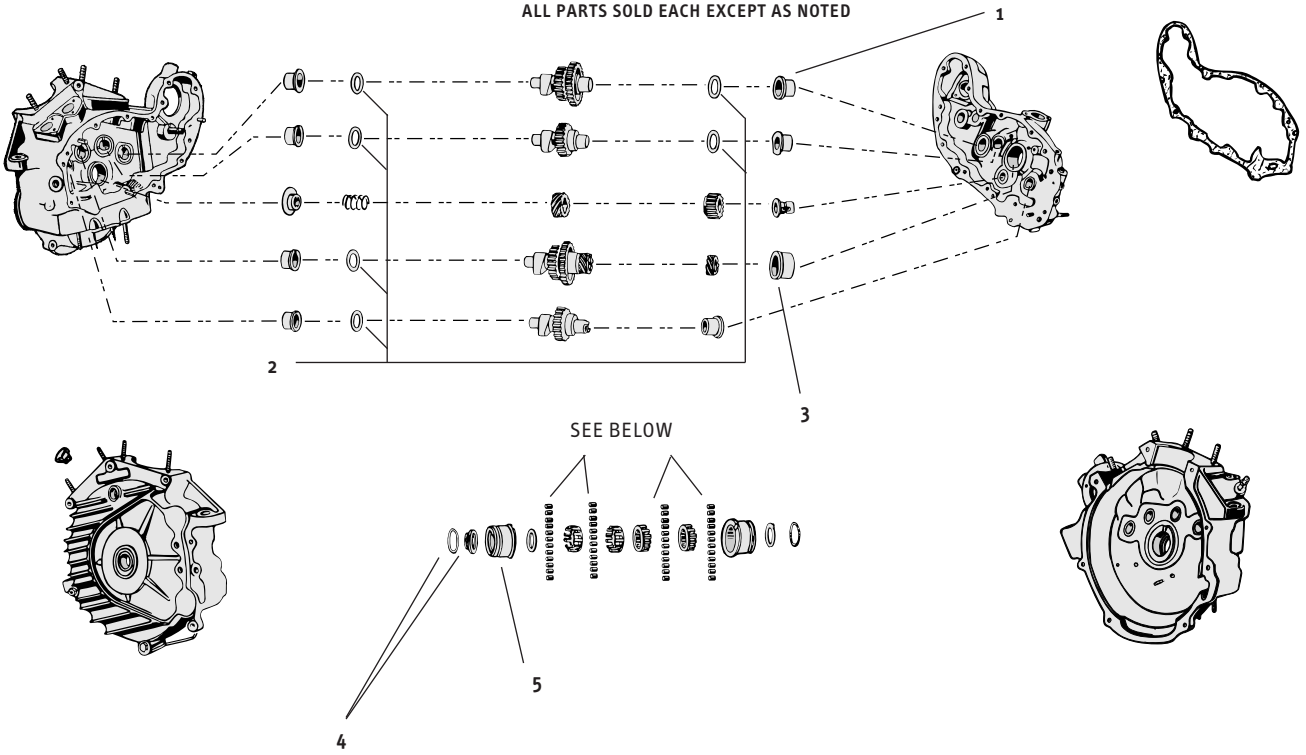

1	**95-416**	BUSHING ALL YEARS. JIMS (OEM 25586-37)
2	**91-271**	CAM SHIM .007 **U.S.A. MADE** (OEM 6769)
3	**95-417**	BUSHING 1959 / 1973. JIMS (OEM 25588-57)
4	—	SEAL & RING SET. COLONY. SOLD AS KIT
5	—	LEFT CASE BUSHING STD. SIZE. JIMS (OEM 24610-39)

CLEAR ACRYLIC TIMING PLUG



See-thru timing plug with knurled knob for a non-slip installation.

91-104 Fits all years of H-D®, including late models. SOLD EACH

CRANKCASE PARTS FOR 61, 74, & 80 C. I. OHV AND SIDE VALVES ALL YEARS AND MODELS

ALL PARTS SOLD EACH EXCEPT AS NOTED ALL PARTS MEET OR EXCEED OEM SPECIFICATIONS
ALSO AVAILABLE COMPLETE ASSORTMENT OF DECORATIVE NUTS & BOLTS IN SECTION 14

1	**98-324**	CRANKCASE BREATHER STUD 1948 / 1964 (OEM 24912-48)
2	**91-104**	TIMING HOLE PLUG, CLEAR ACRYLIC KNURLED KNOB. **U.S.A. MADE**
	91-241	TIMING HOLE PLUG, CLEAR PLASTIC
	98-299	TIMING HOLE PLUG. CHROME PLATED. COLONY (OEM 704)
	98-490	ALLEN TIMING PLUG; DUPLICATE OF OEM 720. CHROME. COLONY
3	**95-110**	SPROCKET SHAFT OIL SEAL FOR 1955 / 1968
	95-105	SPROCKET SHAFT OIL SEAL FOR 1970 & LATER (OEM 12026)
4	**98-360**	SPROCKET SHAFT SPACER ALL BIG TWIN 1970 & LATER **U.S.A. MADE** (OEM 24002-70)
5	**98-365**	RIGHT BEARING WASHER 1958 / 1984 **U.S.A. MADE** (OEM 24692-58)
6	**95-310**	BEARING RACE FOR 1958 / 1992. STD. SIZE (OEM 24599-58)
	95-429	BEARING RACE FOR 1993 & LATER, STD. SIZE (OEM 24599-58B)
7	**98-266**	RETAINING RING 1958 & LATER **U.S.A. MADE** (OEM 11007)
8	**95-318**	ENGINE CASE TIMKEN BEARING FOR 1958 / 1968 (OEM 9029)
	95-320	ENGINE CASE TIMKEN BEARING FOR 1969 & LATER (OEM 9028)
9	**98-267**	RETAINING RING. **U.S.A. MADE** (OEM 24702-40)
10	**95-62**	LEFT CASE BUSHING, STD. SIZE. JIMS (OEM 24621-40)
11	—	WASHER **U.S.A. MADE** (OEM 24799-40)
12	**95-308**	RETAINER (OEM 24721-30)
13	—	SPACER PAUGHCO (OEM 24781-36)
14	—	WASHER PAUGHCO (OEM 24690-40)
15	**95-76**	RIGHT CASE BUSHING FOR 1940 / 1954, STD. SIZE. JIMS (OEM 24599-40)

U.S.A. MADE PINION BEARING ASSEMBLY FOR BIG TWIN 1987 & LATER

U.S.A. MADE precision bearing for late model Big Twins. Consult service manual for color codes and fitting specifications.

95-602	Pinion bearing, White. OEM 24626-87.	SOLD EACH
95-603	Pinion bearing, Green. OEM 24628-87.	
95-604	Pinion bearing, Red. OEM 24641-87.	
95-605	Pinion bearing, Blue. OEM 24643-87.	

CRANK CASE ROLLERS FOR BIG TWIN

BIG TWIN: For right crank case of 1937 thru 1954 OHV, and 1937 thru 1948 side valve (12 used). Standard: 1/4" x .600.

PART NO. EACH	SIZE	OEM NO.
95-219	.Std	9261
95-220	.0002 o.s.	9262
95-292	.0004 o.s.	9263
95-293	.0006 o.s.	9264
95-294	.0008 o.s.	9265
95-295	.001 o.s.	9266

CRANKCASE PARTS FOR 61, 74, & 80 C. I. OHV AND SIDE VALVES ALL YEARS AND MODELS

ALL PARTS SOLD EACH EXCEPT AS NOTED ALL PARTS MEET OR EXCEED OEM SPECIFICATIONS
ALSO AVAILABLE COMPLETE ASSORTMENT OF DECORATIVE NUTS & BOLTS IN SECTION 14

1936/1964

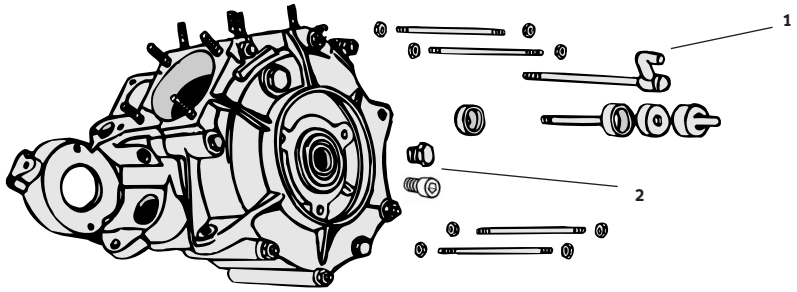

1965 & LATER

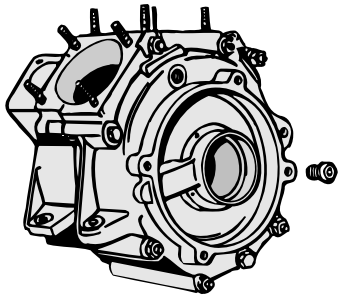

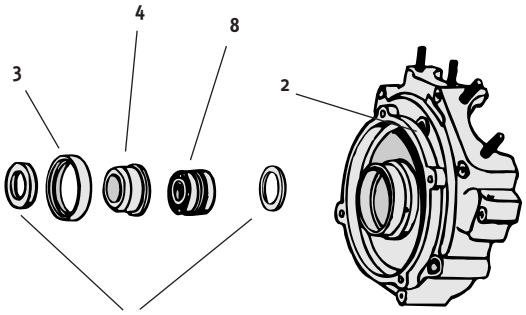

1955 & LATER

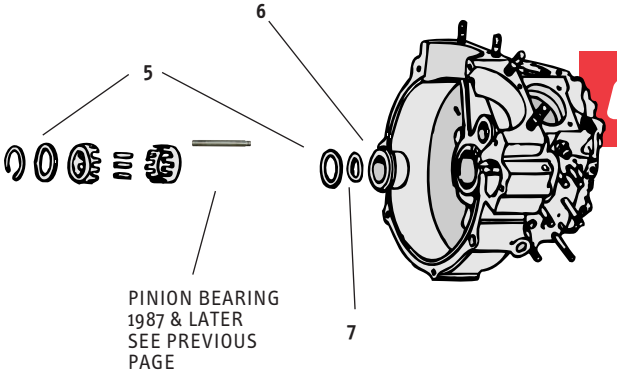

6

LEFT SIDE

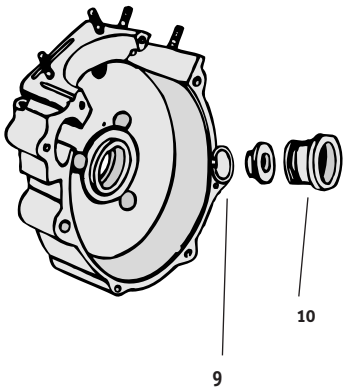

1936/1954

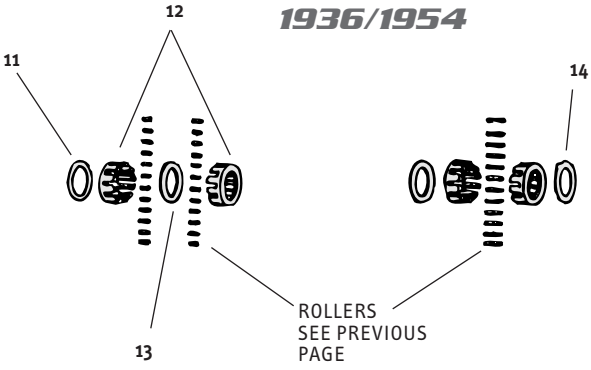

RIGHT SIDE

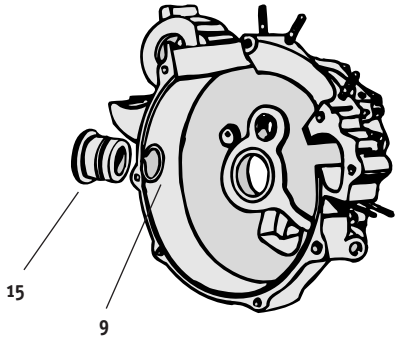

CRANK CASE PARTS FOR 900CC & 1000CC SPORTSTER® 1954 THRU 1978

ALL PARTS SOLD EACH EXCEPT AS NOTED

ALL PARTS MEET OR EXCEED OEM SPECIFICATIONS

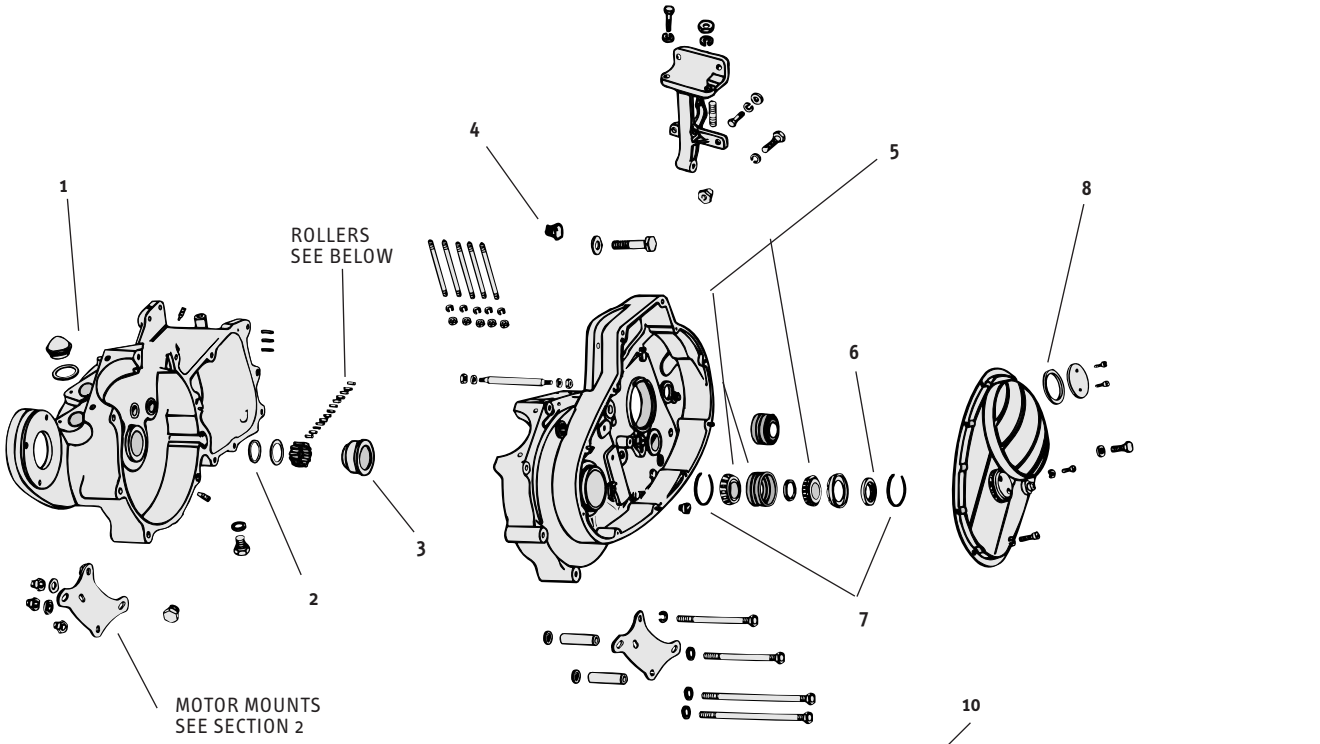

1	**96-330**	OIL STRAINER (OEM 24975-37)
2	**98-331**	RET. RING **U.S.A. MADE** (OEM 24701-54)
3	—	RIGHT CASE BUSHING FOR SPORTSTER® 1954 / 1976. JIMS (OEM 24585-57)
4	**91-104**	TIMING HOLE PLUG, CLEAR ACRYLIC KNURLED KNOB. **U.S.A. MADE**
	91-241	TIMING HOLE PLUG, CLEAR PLASTIC
	98-299	TIMING HOLE PLUG. CHROME PLATED. COLONY (OEM 704)
	98-490	ALLEN TIMING PLUG; DUPLICATE OF OEM 720. CHROME. COLONY
5	**95-447**	TIMKEN LEFT BEARING SET WITH SPACER FOR 1954 / 1976 (OEM 24729-52)
6	**95-764**	SPROCKET SHAFT OIL SEAL (OEM 35151-52A)
7	**98-364**	SNAP RING FOR 1954 / 1976 **U.S.A. MADE** (OEM 24701-52)
8	**78-440**	GASKET **U.S.A. MADE** (OEM 60567-36)
10	**78-434**	PRIMARY COVER GASKET FOR ALL MODELS 1977 & LATER (OEM 34955-75)
11	**95-226**	NEEDLE BEARING (OEM 9063)
12	—	PRIMARY COVER ALLEN SCREW KIT FOR 1977 / 1984. STAINLESS STEEL. SOLD AS KIT

CLEAR ACRYLIC TIMING PLUG



See-thru timing plug with knurled knob for a non-slip installation.

91-104 Fits all years of H-D®, including late models. SOLD EACH

CRANK CASE PARTS FOR 900CC & 1000CC SPORTSTER® 1979 THRU 1985

ALL PARTS SOLD EACH EXCEPT AS NOTED ALL PARTS MEET OR EXCEED OEM SPECIFICATIONS

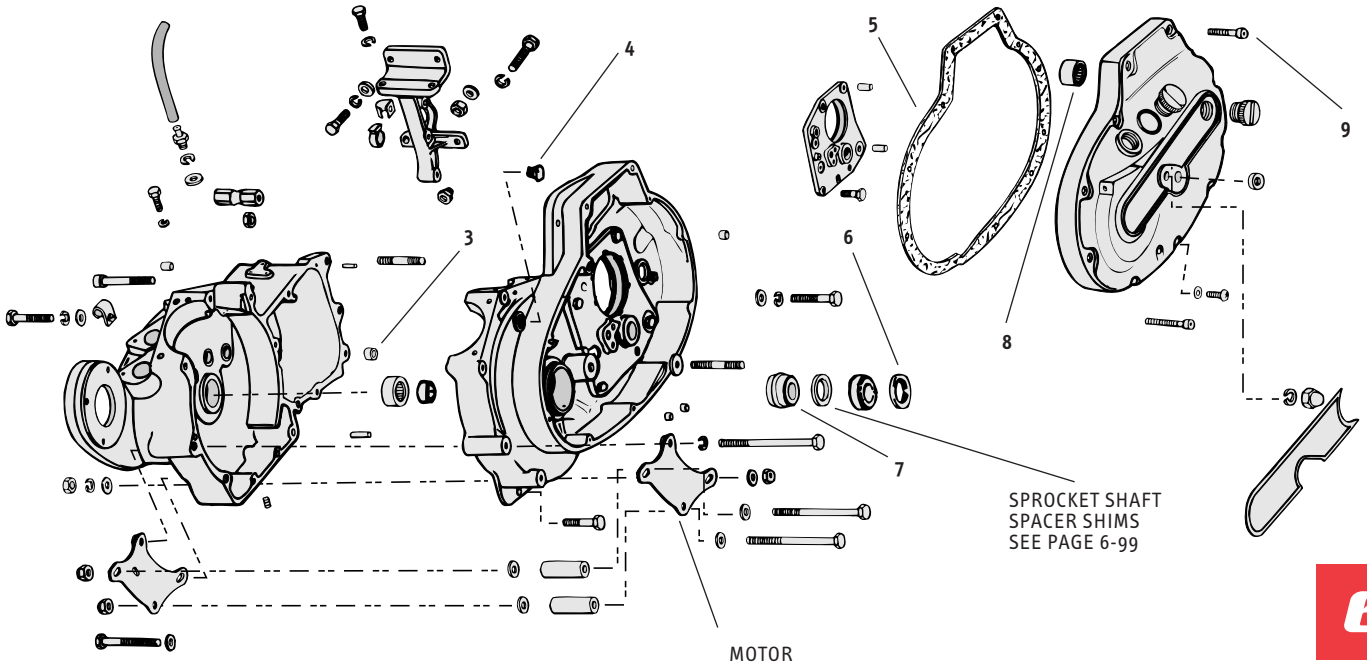

6

3	**95-412**	SHIFTER SHAFT BUSHING. JIMS (OEM 40520-63) USE TWO
4	**91-104**	TIMING HOLE PLUG, CLEAR ACRYLIC KNURLED KNOB. **U.S.A. MADE**
	91-241	TIMING HOLE PLUG, CLEAR PLASTIC
	98-299	TIMING HOLE PLUG. CHROME PLATED. COLONY (OEM 704)
	98-490	ALLEN TIMING PLUG; DUPLICATE OF OEM 720. CHROME. COLONY
5	**78-434**	PRIMARY COVER GASKET FOR ALL MODELS 1977 & LATER (OEM 34955-75)
6	**95-765**	SPROCKET SHAFT OIL SEAL (OEM 35151-74)
7	**95-448**	TIMKEN SPROCKET SHAFT ROLLER BEARING SET FOR 1977 / 1990. INCLUDES TWO BEARINGS AND SPACER (OEM 24729-74)
8	**95-226**	NEEDLE BEARING (OEM 9063)
9	—	PRIMARY COVER ALLEN SCREW KIT FOR 1986 & LATER. STAINLESS STEEL. SOLD AS KIT

SPROCKET SPACERS SHIMS FOR TIMKEN BEARING SET, FOR SPORTSTER® 1977 & LATER , U.S.A. MADE

98-412	SPROCKET SPACER SHIM ASSORTMENT. INCLUDES ONE EACH OF BELOW SIZES. SOLD AS PKG. OF NINE
98-403	SPROCKET SPACER SHIM, .100 (OEM 9142) SOLD EACH
98-404	SPROCKET SPACER SHIM, .102 (OEM 9143) SOLD EACH
98-405	SPROCKET SPACER SHIM, .104 (OEM 9144) SOLD EACH
98-406	SPROCKET SPACER SHIM, .106 (OEM 9145) SOLD EACH
98-407	SPROCKET SPACER SHIM, .108 (OEM 9146) SOLD EACH
98-408	SPROCKET SPACER SHIM, .110 (OEM 9147) SOLD EACH
98-409	SPROCKET SPACER SHIM, .112 (OEM 9148) SOLD EACH
98-410	SPROCKET SPACER SHIM, .114 (OEM 9149) SOLD EACH
98-411	SPROCKET SPACER SHIM, .098 (OEM 9155) SOLD EACH

OIL TRANSFER VALVE



95-381 Fits Sportster® 1957 thru 1976. **SOLD EACH**
Replaces OEM 25075-55.

GEAR/CAM CASE PARTS FOR 900CC & 1000CC SPORTSTER® ALL YEARS & MODELS AND SPORTSTER® EVOLUTION® MODELS 1986 & LATER

ALL PARTS SOLD EACH EXCEPT AS NOTED ALL PARTS MEET OR EXCEED OEM SPECIFICATIONS
DECORATIVE NUTS & BOLTS FOR CAM COVER CAN BE FOUND IN SEC. 14

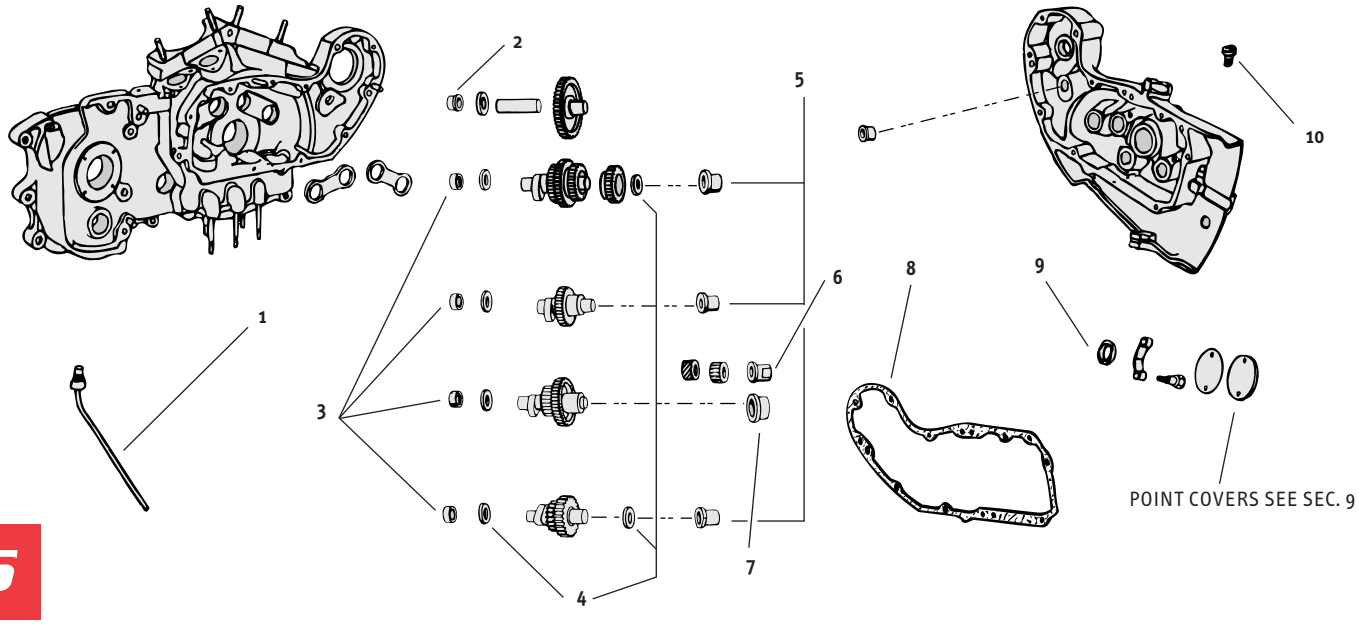

1	—	BREATHER PIPE ASSEMBLY WITH FITTING FOR 1954 / 1978. CHROME. (OEM 24912-53B) SOLD AS ASSY.
2	—	IDLER SHAFT BUSHING **U.S.A. MADE** (OEM 25597-57)
3	**95-140**	NEEDLE BEARING (OEM 9057)
4	**91-271**	CAM SHIM .007 **U.S.A. MADE** (OEM 6769)
	91-272	CAM SHIM .005 **U.S.A. MADE** (OEM 6770)
5	**95-416**	BUSHING 1954 & LATER. JIMS (OEM 25586-37)
6	**95-335**	PINION SHAFT BUSHING 1957 / 1976 JIMS (OEM 25593-57)
	95-336	PINION SHAFT BUSHING 1977 & LATER (OEM 25593-74)
7	**95-417**	BUSHING 1957 / 1990. JIMS (OEM 25588-57)
8	**78-527**	CAM COVER GASKET FOR 1952 / 1980 (OEM 25224-52A)
	78-380	CAM COVER GASKET FOR 1981 / 1985 (OEM 25263-81)
	78-381	CAM COVER GASKET FOR 883, 1100 & 1200, 1986 / 1989 **U.S.A. MADE** (OEM 25263-86)
9	**95-709**	BREAKER POINTS OIL SEAL (OEM 11124)
10	—	CAM COVER ALLEN SCREW KIT 1971 / 1984. STAINLESS STEEL **U.S.A. MADE**

CLEAR ACRYLIC TIMING PLUG



See-thru timing plug with knurled knob for a non-slip installation.

91-104 Fits all years of H-D®, including late models. SOLD EACH

A

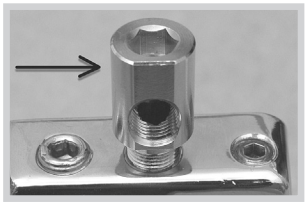

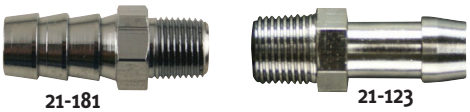

21-181 21-123

A. "CLOSE CLEARANCE" OIL PUMP FITTING

For use in close clearance applications where standard 90˚ elbows won't work. 5/16" Allen on top lets you get good tight fit. Male thread is 1/8" NPT, female 1/8" NPT.

21-440 Fitting 1/8 NPT for close clearance 90˚.
21-123 Vent line fitting 1/8 NPT, OEM 63578-52-straight.
21-181 Oil tank fitting 1/8 NPT, for use with 3/8" oil & fuel lines - straight. SOLD EACH

A. *CUSTOM CHROME PLATED HEX HEAD OIL PUMP PLUGS FOR BIG TWIN*

1936 & LATER

41-886 Tappet oil screen plug, 1970 thru 1980. OEM 657.
41-888 Tappet oil screen, oil pump check valve, relief valve plug 1981 & later. OEM 26263-80.
41-889 Tappet oil screen, 1952 thru 1965. OEM 24987-52.
41-890 Tappet oil screen plug, 1966 thru 1969. OEM 655.

41-891 Complete set of 3 plugs: tappet oil screen, oil pump check valve, relief valve plug, 1970 thru 1980. **SOLD AS SET**
41-892 Complete set of 3 plugs: tappet oil screen, oil pump check valve, & relief valve plug, 1981 & later. OEM 26263-80.

A

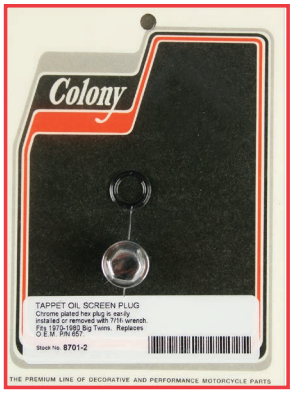

91-886



91-890

B. *OIL PUMP NUT AND WASHER KIT*

1/4 - 24 Hex nut and washer kit for Big Twin 1936 thru 1967. Includes six nuts & six washers.

40-317 Cad plated kit. **SOLD AS KIT**

C

CHROME PLATED



C. *ALLEN HEAD OIL PUMP PLUG SETS FOR BIG TWIN*

U.S.A. MADE oil pump plug sets include oil screen, check valve, and relief valve plugs and o-ring.

41-997 Fits 1970 thru 1980. Gardner-Wescott. **SOLD AS SET**
41-998 Fits 1981 & later. Gardner-Wescott.

NOTE: Hex head oil pump plug sets are located on Section 14.

C



41-997

D. *OIL PUMP MOUNTING HARDWARE KITS*

STOCK — COLONY

41-989 Fits Big Twin OHV 1936 thru 1967. **SOLD AS KIT**

ALLEN HEAD

41-770 Fits Big Twin OHV 1936 thru 1967 Colony.. **SOLD AS KIT**
41-772 Fits Big Twin 1978 thru 1991. Colony.

D



41-989



89-238
CHROME PLATED

A. *OIL PUMP COVER FOR BIG TWIN*

A beautiful cover for all Big Twin aluminum oil pumps 1968 thru 1991 when running belt drives or open primaries. This cover will also work on 1936 thru 1967 models when the aluminum oil pump is used.

89-238 Big Twin oil pump cover. Chrome. SOLD EACH

OIL PUMP PARTS FOR 900CC AND 1000CC SPORTSTER® / K MODEL 1954 THRU 1976

ALL PARTS SOLD EACH EXCEPT AS NOTED ALL PARTS MEET OR EXCEED OEM SPECIFICATIONS
ALSO AVAILABLE COMPLETE ASSORTMENT OF DECORATIVE NUTS & BOLTS IN SECTION 14

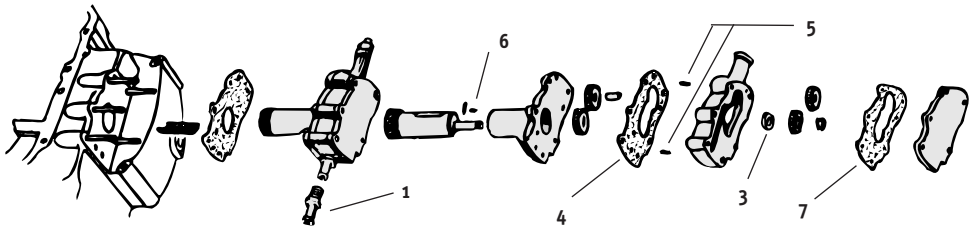

1	**21-123**	OIL FITTING FOR 1967/1976 (OEM 63533-41)
3	**95-221**	OIL SEAL (OEM 26227-58)
4	**78-393**	GASKET FOR 1954/EARLY 1962 **U.S.A. MADE** (OEM 26259-52)
	78-394	GASKET FOR LATE 1962/1972 **U.S.A. MADE** (OEM 26259-62)
5	—	DOWEL PIN (OEM 9095)
6	**98-275**	KEY FOR 1960/1976 **U.S.A. MADE** (OEM 26340-36)
7	**78-390**	GASKET FOR 1954/EARLY 1962 **U.S.A. MADE** (OEM 26258-52)
	78-391	GASKET FOR LATE 1962/1976 **U.S.A. MADE** (OEM 26258-62)

OIL PUMP PARTS FOR 61 AND 74 C. I. OHV 1936 THRU 1967

ALL PARTS SOLD EACH

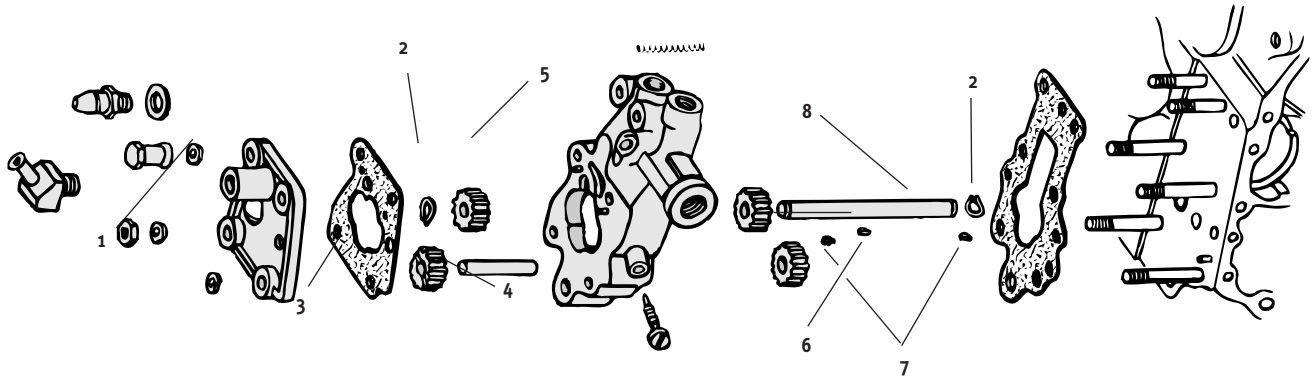

1	—	NUT FOR 1936/ 1967 CHROME. **U.S.A. MADE** (OEM 24831-41)
2	**98-325**	RET. RING **U.S.A. MADE** (OEM 26348-36)
	98-329	EYELET TYPE RET. RING **U.S.A. MADE** (OEM 11002)
3	**78-389**	GASKET FOR 1950/1967 **U.S.A. MADE** (OEM 26257-50A)
4	**98-65**	DRIVE IDLER GEAR FOR LATE 1962 & LATER. JIMS (OEM 26326-62A)
5	**98-66**	DRIVE GEAR FOR 1941 & LATER. JIMS (OEM 26328-74)
6	**98-275**	KEY **U.S.A. MADE** (OEM 26340-36)
7	**98-272**	KEY **U.S.A. MADE** (OEM 26348-15)
8	**98-309**	DRIVE SHAFT. JIMS (OEM 26346-36)
9	**78-385**	GASKET FOR 1941/1967 **U.S.A. MADE** (OEM 26245-41)

OIL PUMP PARTS FOR 74 AND 80 C. I. OHV 1968 THRU 1991

ALL PARTS SOLD EACH

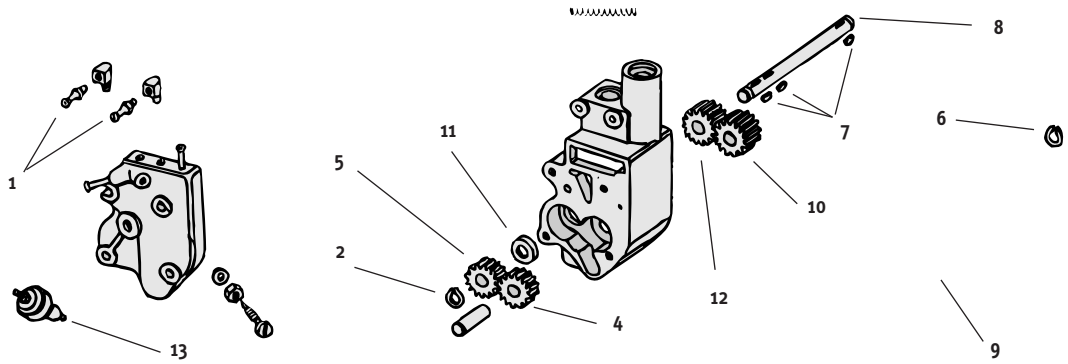

1	**21-123**	OIL FITTING (OEM 63533-41)
2	**98-325**	RET. RING **U.S.A. MADE** (OEM 26348-36)
4	**98-65**	DRIVE IDLER GEAR FOR LATE 1962 & LATER. JIMS (OEM 26326-62A)
5	**98-66**	DRIVE GEAR FOR 1941 & LATER. JIMS (OEM 26328-74)
6	**98-329**	EYELET TYPE RET. RING **U.S.A. MADE** (OEM 11002)
7	**98-272**	KEY **U.S.A. MADE** (OEM 26348-15)
8	**98-334**	DRIVE SHAFT FOR 1968 & LATER. JIMS (OEM 26346-68 & OEM 26346-70
10	**98-64**	DRIVE IDLER GEAR FOR 1968 & LATER. JIMS (OEM 26317-68A)
11	**95-221**	OIL SEAL (OEM 26227-58)
12	**98-63**	DRIVE GEAR 1968 & LATER. JIMS (OEM 26315-68A)
13	**17-61**	OIL PRESSURE SWITCH FOR ALL XL SERIES 55"/61" 1957/1976 (OEM 26552-72), AND ALL FL/FX SERIES 74"/80" 1941/1985. ACCEL (OEM 26551-39C)

ULTIMA® GASKETS

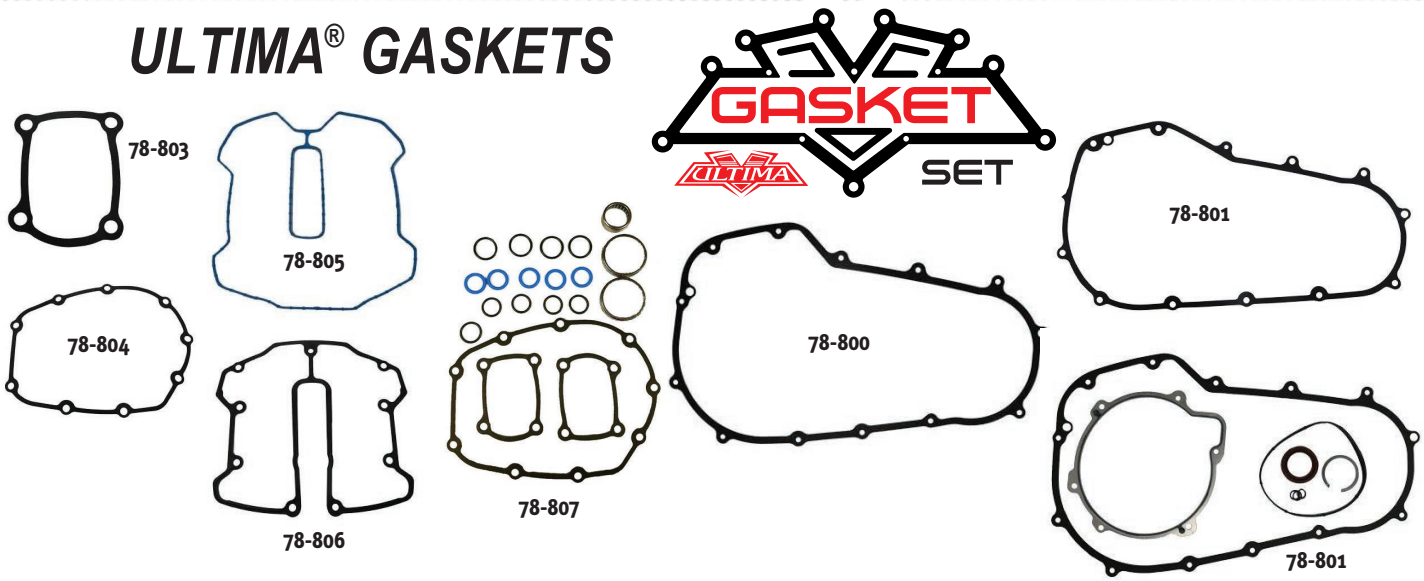

NEW! MILWAUKEE 8 GASKETS

MW#	OEM#	DESCRIPTION	QTY.
PRIMARY MILWAUKEE 8			
78-800		Milwaukee 8 Primary Cover Gasket foamet	EA
78-801		Milwaukee 8 Softtail Primary Cover Gasket foamet	EA
78-802		Primary kit Milwaukee 8 Primary Gasket w/Seals	KIT
MOTOR MILWAUKEE 8			
78-803		0029-Milwaukee 8 lifter/tappet cover gasket foamet	EA
78-804		Milwaukee 8 cam cover gasket foamet	EA
78-805		0042-gasket, rocker housing, lower	EA
78-806		0034-Milwaukee 8 rocker box covergasket sls	EA
78-807		Milwaukee 8 Cam Kit	KIT

MW#	OEM#	DESCRIPTION	QTY.
MOTOR KITS - TWIN CAM®			
77-858		COMPLETE MOTOR KIT, TWN CAM® 88CI	KIT
77-859		COMPLETE MOTOR KIT, TWN CAM® 95CI	KIT
77-860		TOP END KIT, TWN CAM® 88CI	KIT
77-861		TOP END KIT, TWN CAM® 96CI	KIT
77-862		CAM CHANGE KIT, TWN CAM®	KIT
78-601		ENGINE TO TRANS INTERFACE, OEM 35607-06	EA
MOTOR KITS - EVO			
77-863		COMPLETE MOTOR KIT, STANDARD BORE EVO 1984-91	KIT
77-864		COMPLETE MOTOR KIT, STANDARD BORE EVO 1992-99	KIT
77-865		COMPLETE MOTOR KIT, 3.625 BORE EVO 1984-91	KIT
77-866		COMPLETE MOTOR KIT, 3.625 BORE EVO 1992-99	KIT
77-867		TOP END KIT, STANDARD BORE EVO 1984-91	KIT
77-868		TOP END KIT, STANDARD BORE EVO 1992-99	KIT
77-869		TOP END KIT, 3.625 BORE EVO 1984-91	KIT
77-870		TOP END KIT, 3.625 BORE EVO 1992-99	KIT
77-871		CAM CHANGE KIT, EVO	KIT
MOTOR KITS - SHOVELHEAD			
77-872		TOP END KIT, SHOVELHEAD	KIT
77-874		COMPLETE MOTOR KIT, SHOVELHEAD 1966-84	KIT
77-875		CAM CHANGE KIT, SHOVELHEAD 1966-69	KIT
77-876		CAM CHANGE KIT, SHOVELHEAD 1970-84	KIT

ULTIMA® GASKETS

MW#	OEM#	DESCRIPTION	QTY.
MOTOR KITS - SPORTSTER®			
77-878		TOP END KIT, SPORTSTER® 883 1991-03	KIT
77-879		TOP END KIT, SPORTSTER® 883 2004-UP	KIT
77-881		TOP END KIT, SPORTSTER® 1200 1991-03	KIT
77-882		TOP END KIT, SPORTSTER® 1200 2004-UP	KIT
77-883		CAM CHANGE KIT, SPORTSTER®	KIT

MW#	OEM#	DESCRIPTION	QTY.
ROCKER BOX GASKETS			
77-705	17355-84	ROCKER BOX GASKET, LOWER, EVO 84-91, RUBBER	EA
77-706	17355-92	ROCKER BOX GASKET, LOWER, EVO 92-98, RUBBER	EA
77-707	17356-84	ROCKER BOX GASKET, UPPER, EVO 84-91, RUBBER	EA
77-708	17356-92	ROCKER BOX GASKET, UPPER, EVO 92-98, RUBBER	EA
77-709	17358-84	ROCKER BOX GASKET, MIDDLE, EVO & XL 84-03, RUBBER	EA
77-710	17540-69	ROCKER BOX GASKET, SHOVELHEAD 66-84, CARBON	EA
77-711	17540-69	ROCKER BOX GASKET, SHOVELHEAD 66-84, FOAMET	EA
77-750	6114	ROCKER BOX COVER WASHER, 1984-LATER, COPPER	EA
XL® ROCKER BOX GASKET KITS			
77-930	---------	89-03 XL Rocker box gasket kit	KIT
77-931	---------	89-03 XL, Viton Rocker box gasket kit	KIT
77-932	---------	04-06 XL Rocker box gasket kit	KIT
77-933	---------	07-17 XL Rocker box gasket kit	KIT
EVO® ROCKER BOX GASKET KITS			
77-934	---------	84-91 Evo Rocker box gasket kit	KIT
77-935	---------	84-91 Evo, Viton Rocker box gasket kit	KIT
77-936	---------	92-99 Evo Rocker box gasket kit	KIT
77-937	---------	92-99 Evo, Viton Rocker box gasket kit	KIT
TC® ROCKER BOX GASKET KITS			
77-938	---------	99-17 TC Rocker box gasket kit	KIT
77-780	11101	SHOVELHEAD ROCKER SHAFT O-RING 1966-84	EA
77-785	11270	O-RING, LOWER ROCKER COVER TO CYLINDER HEAD, TWIN CAM® 99-LATER	EA
77-794	17507-48	ROCKER COVER GASKET, PANHEAD 1948-65, FELT PAD	EA
77-795	16778-84A	LOWER RIGHT ROCKER BOX BASE GASKET, EVO, XL, 84'-99', FIBRE-SILICONE BEAD	EA
77-796	16779-84A	LOWER LEFT ROCKER BOX BASE GASKET, EVO, XL, 84'-99', FIBRE-SILICONE BEAD	EA
77-797	16800-84	ONE PIECE ROCKER BASE GASKET, EVO, XL, 1986-2004, RUBBER COATED STEEL	EA
77-798	17353-89	ROCKER BOX BASE GASKET, XL 1991-04, RUBBER	EA
77-799	17354-89	ROCKER BOX UPPER GASKET, XL 1991-03, RUBBER	EA
77-800	17386-99	ROCKER COVER GASKET, TWIN CAM® 99-LATER, RUBBER COATED STEEL	EA
77-801	16719-99	ROCKER BASE GASKET, TWIN CAM® 99-LATER, RUBBER COATED STEEL	EA
77-827	17591-99	BREATHER COVER GASKET, TWIN CAM® 1999-LATER, FIBRE	EA
77-828	26858-99	BREATHER COVER UMBRELLA VALVE, TWIN CAM® 1999-LATER, RUBBER	EA
77-829	63815-99	BREATHER BAFFLE FILTER ELEMENT, TWIN CAM® 1999-LATER	EA
77-830	17592-99	BREATHER BAFFLE GASKET, TWIN CAM® 1999-LATER, FIBRE	EA
PUSHROD O-RINGS			
77-780	11101	UPPER PUSHROD TUBE O-RING, SHOVEL	EA
77-700	11157	UPPER PUSHROD TUBE O-RING, EVO, XL 1986-90	EA
77-781	11293	UPPER PUSHROD TUBE O-RING, TWIN CAM® 99-UP	EA
77-782	17955-36	UPPER PUSHROD TUBE CORK GASKET, PAN	EA
77-792	11190	UPPER PUSHROD TUBE O-RING, XL 1991-UP	EA
77-701	11132	CENTER PUSHROD TUBE O-RING	EA
77-782	17955-36	CENTER PUSHROD TUBE CORK GASKET, PAN, SHVL 1948-79	EA
77-702	11145	BOTTOM PUSHROD TUBE O-RING	EA
77-780	11101	BOTTOM PUSHROD TUBE O-RING, SHOVEL 1980-84	EA
77-783	17955-48	BOTTOM PUSHROD CORK GASKET, PAN, SHVL 1948-79	EA
77-793	17944-89	BOTTOM PUSHROD TUBE O-RING, XL 1991-2003	EA
77-894	11377	BOTTOM PUSHROD TUBE O-RING, XL 2004-UP	EA

ULTIMA® GASKETS

MW#	OEM#	DESCRIPTION	QTY.
TAPPET BLOCK GASKETS			
77-712	18633-48	TAPPET BLOCK GASKET, REAR; PAN,SHOVEL, EVO 48-LATER FOAMET	EA
77-713	18634-48	TAPPET BLOCK GASKET, FRONT; PAN,SHOVEL, EVO 48-LATER FOAMET	EA
77-887	11176	ANTI ROTATION PIN O-RING, SPORTSTER® 1991-2003	EA
77-802	17976-04	TAPPET BLOCK GASKET, SPORTSTER® 04-LATER, FOAMET	EA
77-803	18635-99	TAPPET BLOCK GASKET, TWIN CAM® 1999-LATER, FIBRE	EA
77-846	18635-99	TAPPET BLOCK GASKET, TWIN CAM® 1999-LATER, FOAMET	EA
VALVE SEAL			
91-770		VALVE SEAL, BIG TWIN, XL TC88	EA
91-777		TWIN CAM® VALVE STEM SEAL 04-LATER	EA
91-779		VALVE SEAL, 1948-81, 74", .562	EA
HEAD GASKETS			
77-760		HEAD GASKET, 1450 TC 99-LATER, MLS .030 THICK	EA
77-761		HEAD GASKET, 1450 TC 99-LATER, MLS .040 THICK	EA
77-762		HEAD GASKET, 1450 TC 99-LATER, SILICONE BEAD W/FIRE RING	EA
77-763		HEAD GASKET, 1550 TC 99-LATER, MLS .030 THICK	EA
77-764		HEAD GASKET, 1550 TC 99-LATER, MLS .040 THICK	EA
77-789	11273	O-RING, CYLINDER TO HEAD GASKET LOCATING RING, TWIN CAM® 99-LATER	EA
77-765		HEAD GASKET, 883 SPORTSTER® 84-05, CARBON W/FIRE RING	EA
77-766		HEAD GASKET, 883 SPORTSTER® 84-05, MLS	EA
77-767		HEAD GASKET, 883 SPORTSTER® 84-05, SILICONE BEAD W/FIRE RING	EA
77-768		HEAD GASKET, 883 SPORTSTER® 84-05, "TEFLON" W/FIRE RING	EA
77-769		HEAD GASKET, 3 5/8 EVO 84-98, CARBON W/FIRE RING	EA
77-770		HEAD GASKET, 3 5/8 EVO 84-98, SILICONE BEAD W/FIRE RING	EA
77-771		HEAD GASKET, 3 5/8 EVO 84-98, "TEFLON" W/FIRE RING	EA
77-772		HEAD GASKET, 3 5/8 EVO 84-98, MLS .030 THICK	EA
77-773		HEAD GASKET, 3 5/8 EVO 84-98, MLS .040 THICK	EA
77-774		HEAD GASKET, STD BORE EVO & 1200XL, MLS .030 THICK	EA
77-775		HEAD GASKET, STD BORE EVO & 1200XL, MLS .040 THICK	EA
77-776		HEAD GASKET, STD BORE EVO & 1200XL, CARBON W/FIRE RING	EA
77-777		HEAD GASKET, STD BORE EVO & 1200XL, SILCONE BEAD W/FIRE RING	EA
77-778		HEAD GASKET, STD BORE EVO & 1200XL, "TEFLON" W/FIRE RING	EA
77-779	16770-66	HEAD GASKET, STD SHOVELHEAD, TEFLON W/FIRE RING	EA
77-907		HEAD GASKET, SHOVELHEAD 3-5/8 BORE, MLS .040	EA
77-908		HEAD GASKET, SHOVELHEAD STD BORE, MLS .040	EA
77-905	16769-57	HEAD GASKET, IRONHEAD 1957-1971 , "TEFLON" W/FIRE RING	EA
77-906		HEAD GASKET, PANHEAD 1948-1965 , "TEFLON" W/FIRE RING	EA
BASE GASKETS			
77-703	16776-63	BASE GASKET, FRONT CYLINDER SHOVELHEAD, 1963-LATER	EA
77-704	16777-63	BASE GASKET, REAR CYLINDER SHOVELHEAD, 1963-LATER	EA
77-755	9551	BASE GASKET, STANDARD BORE EVO, SLS	EA
77-756	9553	BASE GASKET, STANDARD BORE 883 & 1200 XL, SLS	EA
77-758	9730	BASE GASKET, 3 5/8 BORE EVO 84-99, SLS	EA
77-759	9731	BASE GASKET, 3 13/16 BORE EVO 84-99, SLS	EA
77-784	11256	CYLINDER BASE TO CRANKCASE, TWIN CAM® 99-LATER	EA
77-703	16776-63	BASE GASKET, FRONT CYLINDER SHOVELHEAD, 1963-LATER	EA
77-704	16777-63	BASE GASKET, REAR CYLINDER SHOVELHEAD, 1963-LATER	EA
77-755	9551	BASE GASKET, STANDARD BORE EVO, SLS	EA
77-756	9553	BASE GASKET, STANDARD BORE 883 & 1200 XL, SLS	EA
77-758	9730	BASE GASKET, 3 5/8 BORE EVO 84-99, SLS	EA
77-759	9731	BASE GASKET, 3 13/16 BORE EVO 84-99, SLS	EA
77-784	11256	CYLINDER BASE TO CRANKCASE, TWIN CAM® 99-LATER	EA
MOTOR CASE AND SPROCKET SHAFT SEALS			
95-805	12026	SPROCKET SHAFT SEAL, BIG TWIN 1970-99	EA
77-856	12068	SPROCKET SHAFT SEAL, TWIN CAM® 99-LATER, XL 2004-LATER	EA
77-857	35151-74	SPROCKET SHAFT SEAL, SPORTSTER® 1986-2003	EA
77-886	11140	PISTON COOLING JET O-RING, 1999-UP	EA
77-890	11289	CRANK SHAFT POSITION SENSOR O-RING, 1999-UP	EA
77-901	26432-76A	ENGINE CASE LOCATING DOWEL O-RING, 1999-UP	EA

ULTIMA® GASKETS

MW#	OEM#	DESCRIPTION	QTY.
CAM COVER AND CAM CHEST GASKETS			
77-714	25225-36	CAM COVER GASKET, PAN & SHOVEL FOAMET	EA
77-715	25225-70	CAM COVER GASKET, SHOVELHEAD & EVO 70-92 FOAMET	EA
77-716	25225-70	CAM COVER GASKET, SHOVELHEAD & EVO 70-92 FIBRE	EA
77-717	25244-93	CAM COVER GASKET, EVO 93-98 FOAMET	EA
77-718	25244-93	CAM COVER GASKET, EVO 93-98 SILICONE	EA
77-719	25244-99	CAM COVER GASKET, TWIN CAM® 99-LATER FOAMET	EA
77-720	25244-99	CAM COVER GASKET, TWIN CAM® 99-LATER SILICONE	EA
95-813	11301	CAM PLATE TO CASE O-RING, TWIN CAM®'99 & LATER	EA
77-721	25263-86	CAM COVER GASKET, SPORTSTER® 86-90 FIBRE	EA
77-722	25263-90	CAM COVER GASKET, SPORTSTER® 91-03 FOAMET	EA
77-791	11124	SEAL, POINT COVER, SPORTSTER® 1974-2004	EA
77-889	11288	CAM POSITION SENSOR O-RING, ALL MODELS 1999-2000	EA
77-904	83162-51	CAM SEAL, SHOVELHEAD 1970-1984, EVO 1984-1999	EA
OIL PUMP GASKETS, O-RINGS AND SEALS			
77-813	26246-68	OIL PUMP BODY GASKET, SHOVELHEAD 1968-1980	EA
77-814	26258-68	OIL PUMP COVER GASKET, SHOVELHEAD 1968-1980	EA
77-815	26273-80	OIL PUMP BODY GASKET, BIG TWIN 1980-1991, FIBRE	EA
77-816	26276-80	OIL PUMP COVER GASKET, BIG TWIN 1980-1991, FIBRE	EA
77-817	26273-92	OIL PUMP BODY GASKET, EVO 1992-1999, FIBRE	EA
77-818	26276-92	OIL PUMP COVER GASKET, EVO 1992-1999, FIBRE	EA
77-819	26495-89	OIL PUMP GASKET, SPORTSTER® 19691-LATER, FOAMET	EA
77-820	26434-91	OIL PUMP COVER GASKET, SPORTSTER® 1991-LATER, FIBRE	EA
77-781	11293	OIL PUMP INNER MEDIUM O-RING, TWIN CAM® 1999-LATER	EA
77-825	11301	OIL PUMP INNER SMALL O-RING, TWIN CAM® 1999-LATER	EA
77-826	11286	OIL PUMP OUTER O-RING, TWIN CAM® 1999-LATER	EA
77-885	11105	OIL PUMP CAP O-RING, ALL BIG TWIN	EA
77-888	11241	OIL PUMP LOWER COVER O-RING, ALL BIG TWINS 1992-1998	EA
EXHAUST GASKETS			
77-751	65324-83	EXHAUST GASKET, TAPERED STYLE	EA
77-752	65324-83	EXHAUST GASKET, FLAT RACE STYLE, CARBON & STEEL	EA
77-753	65324-83	EXHAUST GASKET, FLAT RACE STYLE, MASHED STEEL	EA
77-754	65834-68	EXHAUST GASKET, SHOVELHEAD 66-84, COPPER	EA

GASKET MATERIALS

COMETIC GASKET

EST KITS

When you see this abbreviation in the description of a kit you can be assured that the best possible materials available are used for every gasket in that kit for that application. EST is short for, EXTREME SEALING TECHNOLOGY. These kits are more expensive than a standard kit for a reason; there is no compromise when we build these kits. These kits contain such materials as MLS head gaskets, Steel viton coated base gaskets, blue viton valve stem seals, AFM material, race style exhaust gaskets that won't fray into the port and the latest upgrades in new gasket technology and fit, such as the one piece Evolution rocker box base gasket made form our single layer .020" embossed viton coated steel. These are truly for the builder who demands that best and appreciates the long-term value for his or her dollar. EST kits are available in Complete Motor Kits and Top End Kits.

MLS™ (MULTI-LAYER STEEL HEAD GASKETS)

Ideal for both aluminum heads to cast iron blocks and aluminum heads to aluminum blocks. Two viton coated outer embossed spring steel layers with a steel inner layer that provides support to the gasket allowing multiple thickness. Withstands the shearing forces created by aluminum heads on cast ironblocks. Retains torque (once the gasket takes a torqueset, re-torquing is not required). Available thickness: .027", .030", .036", .040", .045", .051", .054", .050", .065", .074", .120"

AFM

Is the ideal gasket material for machined surfaces, especially when used between two uneven stamped surfaces that have been plated. AFM is a chemically blown, compounded nitrile synthetic rubber bonded to an aluminum core with temperature resistance of over 2500 F. AFM material has an 85% recovery while maintaining a strong torque retention. AFM does not require gasket sealers or silicone bead. Re-torque is NOT required. Available thickness: .018", .032", .045", .060"

CFM-20

A perforated steel core with an elastomer surface is ideal for head gaskets allowing heat to be drawn evenly across the gasket surface while providing maximum sealing characteristics when exposed to coolants and oils. Available thickness: .043", .051", .059"

SPRING STEEL

A stainless steel core with a .001" thick coating of viton rubber on both sides. Available thickness: .010", .014", .020"

AFM GASKETS & KITS

MW#	COMETIC REF#				APPLICATION
CAM COVER GASKETS BIG TWIN					
Single	**Single**	**5 Pack**			
78-525	C9575F5	**78-543**	C9575F5	25244-99	99'-UP Twin Cam®, Cam Cover
78-504	C9328F1	**78-379**	C9328F5	25225-93X	93-98' Big Twin Cam Cover
78-510	C9302F1	**78-378**	C9302F5	25225-70X	70-92' Big Twin Cam Cover
78-523	C9334F1	**78-377**	C9334F5	25225-36C	41-69' Big Twin Cam Cover
SPORTSTER® CAM COVER GASKET					
Single	**Single**	**5 Pack**			
78-581	C9944F1	**78-582**	C9944F5	25263-90D	04'-UP Sportster® Cam Cover
78-502	C9313F1	**78-382**	C9313F5	25263-90B	91-03' Sporty Cam Cover
78-501	C9311F1	**78-381**	C9311F5	25263-86	86-90' Sporty Cam Cover
V - ROD "MLS" HEAD GASKETS (PAIRS)					
78-583	C9895	V-Rod .027" Std Bore Head Gasket			
78-584	C9896	V-Rod .030" Std Bore Head Gasket			
78-585	C9897	V-Rod .027" 4.250" Bore Head Gasket			
78-586	C9898	V-Rod .030" 4.250" Bore Head Gasket			
TWIN CAM® "MLS" HEAD GASKETS (PAIRS)					
78-255	C9790	Head Gasket .030" MLS All Twin Cam® Models Std bore 1999-Up			
78-256	C9745	Head Gasket .040" MLS All Twin Cam® Models Std bore 1999-Up			
78-257	C9721	Head Gasket .030" MLS All Twin Cam® Models 1550 Big Bore 1999-Up			
78-258	C9722	Head Gasket .040" MLS All Twin Cam® Models 1550 Big Bore 1999-Up			
78-261	C9725	4.000" Bore .030" MLS All Twin Cam® Models 1999 - Up			
78-262	C9726	4.000" Bore .040" MLS All Twin Cam® Models 1999 - Up			
77-650	C9070-040	4.060" Bore .043" MLS All Twin Cam® Models 1999 - Up			
78-587	C9910	4.125" Bore .030" MLS All Twin Cam® Models 1999 - Up			
78-588	C9743	4.125" Bore .040" MLS All Twin Cam® Models 1999 - Up			
TWIN CAM® SLS BASE GASKET (PAIRS) SINGLE LAYER STEEL					
78-594	C9937	4" Twin Cam® Axtell® style 4.210" Spigot Base gasket .010" Pair			
78-595	C9738	4" Twin Cam® Axtell® style 4.210" Spigot Base gasket .020" Pair			
78-300	C9110-020	4" Twin Cam® Ultima® 4.250" Spigot .020" Pair			
78-596	C9938	4.125" Twin Cam® Base gasket .010" Pair			
78-597	C9739	4.125" Twin Cam® Base gasket .020" Pair			
EVO BIG TWIN & SPORTSTER® MLS HEAD GASKETS (PAIRS)					
78-246	C9688	Stock EVO's 3.570" .030"			
78-247	C9689	Stock EVO's 3.570" .040"			
78-248	C9690	3 5/8" Big Bore EVO's .030"			
78-249	C9691	3 5/8" Big Bore EVO's .040"			
78-252	C9694	3 3/4" Big Bore EVO's .030"			
78-253	C9695	3 3/4" Big Bore EVO's .040"			
78-250	C9692	3 13/16" Big Bore EVO's .030"			
78-251	C9693	3 13/16" Big Bore EVO's .040"			
EVO BIG TWIN SLS BASE GASKETS (PAIRS) SINGLE LAYER STEEL					
78-608	C9101	1340 Evolution B/T STD bore .010"			
78-609	C9551	1340 Evolution B/T STD bore .020"			
78-610	C9532	3 5/8" & 3 3/4" Big Bore 1340 B/T EVO's .010"			
78-611	C9552	3 5/8" & 3 3/4" Big Bore 1340 B/T EVO's .020"			
78-612	C9869	3 13/16" Evolution B/T .010"			
78-613	C9870	3 13/16" Evolution B/T .020"			

NOTE: COMETIC REF# AND OEM REF# FOR REFERENCE PURPOSES ONLY

MW#	COMETIC REF#	APPLICATION

EVO SPORTSTER® SLS BASE GASKETS (PAIRS) SINGLE LAYER STEEL

78-618	C9100	883/1200 EVO Sportsters® .010"
78-619	C9553	883/1200 EVO Sportsters® .020"
78-620	C9554	3 5/8" Big Bore 883/1200 EVO Sportsters® .010"- (ALSO FITS WISECO 3 3/4" STEEL SLEEVE B/BORE)
78-621	C9555	3 5/8" Big Bore 883/1200 EVO Sportsters® .020"- (ALSO FITS WISECO 3 3/4" STEEL SLEEVE B/BORE)
78-622	C9875	3 3/4"& 3 13/16" EVO SPORTY MILLENIUM CYLINDERS .010"- (EITHER BORE UTILIZES A 4.00" O.D. SPIGOT DIAMETER)
78-623	C9876	3 3/4" & 3 13/16" EVO SPORTY MILLENIUM CYLINDERS .02" (EITHER BORE UTILIZES A 4.00" O.D. SPIGOT DIAMETER)

COMETIC GASKET

TWIN CAM® GASKET KITS

EST TWIN CAM® HI-PERFORMANCE KITS

MW#	COMETIC REF#	OEM REF#	APPLICATION	
• Complete Gasket Kit				
77-447	C9920		'99-UP All twin Cam® Models 1550 Big Bore Kits	kit
77-432	C9777F		'99-UP Dyna®/Softails®, Std. Bore	kit
77-433	C9778F		'99-UP FLT's, Road King, Std. Bore	kit
• Top End Gasket Kit				
77-434	C9779		'99-UP All Twin Cam® Motors Std bore W / .040" Head Gasket	kit
77-448	C9845		'99-UP All Twin Cam® Motors Std bore W / .030" Head Gasket	kit
77-435	C9780		'99-UP All Twin Cam® Motors 1550 cc Big Bore Kit W / .040" Head Gasket	kit
77-449	C9844		'99-UP All Twin Cam® Motors 1550 cc Big Bore Kit W / .030" Head Gasket	kit
• Twin Cam® Motor Only Kit				
77-450	C9892		All Twin Cam® with 1550 Big Bore, Motor Only Kit, .040" MLS Head Gaskets	kit

STANDARD TWIN CAM® KITS

• Complete Motor Gasket Kit for 88' Twin Cam®				
77-395	C9777F	17053-99	1999-UP DYNA®/Softail® 88' Twin Cam® Motor Gasket Kit	kit
77-451	C9778F		1999-UP FLT, Road King, Twin Cam® Motor Gasket Kit	kit
77-480	C9171		2007-Later Softail®, Twin Cam® Motor Gasket Kit	kit
77-481	C9172		2007-Later FL models, Twin Cam® Motor Gasket Kit	kit

(Kit contains all of the necessary gaskets, seals & o-rings to rebuild the motor from the cylinder base up -Head Gaskets are .059" thick.)

• Top End Gasket Kit for 88' Twin Cam®				
77-396	C9779	17052-99	1999-UP 88' Twin Cam® Top End Rebuild Gasket Kit	kit
77-486	C9146		2003-Later 88' Twin Cam® Top End Gasket Kit	kit
• Big Bore Top End Gasket Kit for 95' Twin Cam®				
77-397	C9601		1999-UP 95' Twin Cam® 1550 Big Bore Top End Gasket Kit	kit

(Kit contains all of the necessary gaskets, seals & o-rings to rebuild the motor from the cylinder base up - Head Gaskets are .043" thick.)

• Big Bore Top End Gasket Kit for 3.875" Twin Cam®				
77-487	C9147		2003-Later 3.875" Big Bore Twin Cam® Top End Gasket Kit	kit
• Rocker Box Gasket Kit for 88' & 95' Twin Cam®				
77-398	C9588		1999-UP 88' & 95' Twin Cam® Rocker Box Gasket Kit	kit
• Twin Cam® Primary Gasket and Seal Kit				
77-485	C9173		2007-Later FL models, Primary Kit	kit

(Kit contains rubber coated metal, embossed rocker gaskets as well as Kevlar fiber gaskets and nitrile rubber umbrella valves.)

• Cam Service Kits for Twin Cam®				
77-452	C9664	17045-99	Cam Service Kit All T/C Models 1999 -UP	KIT

TWIN CAM® INDIVIDUAL REPLACEMENT GASKETS, SEALS, O-RINGS 1999-UP

IMPORT MW#	COMETIC MW#	COMETIC REF#	OEM REF#	APPLICATION	QTY
• Rocker Box Assembly Gaskets					
	78-530	C9577	17286-99	Rocker Cover Gasket All Models 1999 -UP .020" Rubber Coated Steel	10
	78-531	C9579	17591-99	Breather Cover Gasket All Models 1999 -UP	10
	78-532	C9633	26858-99	Rocker Cover Umbrella Vlv All Models 1999 -UP	10
	78-533	C9679	63815-99	Breather Filter Element All Models 1999 -UP	10
	78-534	C9580	17592-99	Breather Baffle Gasket All Models 1999 -UP	10
	78-535	C9576	16719-99	Rocker Housing Gasket All Models 1999 -UP .020" Rubber Coated Steel	10
	95-825	C9629	11270	Rocker Arm Support O-ring All Models 1999 -UP	10
	78-537	C9836		Twin Cam® Viton Valve seals	25
• Pushrod, Tappet Gaskets and Valve Stem Seals					
95-716	**95-726**	C9294	11293	Pushrod Cvr O-ring UPPER all Models 1999 -UP	10
95-241	**95-826**	C9459	11132	Pushrod Cvr O-ring MIDDLE all Models 1999 -UP	25
95-713	**95-827**	C9293	11145	Pushrod Cvr O-ring LOWER all Models 1999 -UP	25
	78-405	C9578	18635-99	Lifter Cvr Gasket All Models 1999 -UP	10
	78-537	C9836		Valve Stem Oil Seal All Models 1999 -UP ("VITON")	25
	95-744	C9023	18001-83B	Valve Stem Oil Seal All Models 1999 -UP ("TEFLON")	25
• Head and Base Gaskets					
	78-255	C9790	16775-99	Head Gasket .030" Spring Steel All Models Std Bore 1999 -UP	2
	78-256	C9745		Head Gasket .040" Spring Steel All Models Std Bore 1999 -UP	2
	78-257	C9721		Head Gasket 1550cc .030" Spring Steel; All Models Big Bore 1999-UP	2
	78-258	C9722		Head Gasket 1550cc (2) .040" Spring Steel; All Models Big Bore 1999-UP	2
	78-508	C9648		Head Gasket CFM-20 .051" All Models Std. Bore 1999 -UP	2
	78-509	C9649		Head Gasket CFM-20 .043" All Models Std Bore 1999 -UP	2
	78-259	C9723		Head Gasket 1550cc .027" Copper; All Models Big Bore 1999-UP *Dowel Pin O-Rings must be used with Copper Head Gaskets*	2
	78-260	C9724		Head Gasket 1550cc CFM-20 .043"; All Models Big Bore 1999-UP	2
	78-261	C9725		Head Gasket 4" Twin Cam® All Models; .030" Spring Steel 1999-UP	2
	78-262	C9726		Head Gasket 4" Twin Cam® All Models; .040" Spring Steel 1999-UP	2
	95-865	C9628	11256	Cylinder Base O-ring All Models 1999 -UP	10
	95-816	C9438	11273	Head Gasket Locating Dowel O-ring All Models 1999 -UP	10
	95-816	C9438	11273	Cylinder Locating Dowel O-ring All Models 1999 -UP	10
• Motor Case O-rings and Seals					
95-754	**95-817**	C9287	26432-76A	Engine Case Locating Dowel O-ring 1999 -UP	10
	95-818	C9667	11289	Crankshaft Position Sensor O-ring 1999 -UP	25
	95-819	C9632	12068	Motor Sprocket Shaft Oil Seal 1999 -UP	5
• Intake and Exhaust Gaskets					
	78-538	C9719		Exhaust Gasket All Models 1999 -UP "RACE STYLE"	10
	78-445	C9288	65324-83A	Exhaust Gasket All Models 1999 -UP "TAPERED"	10
	78-206	C9540		Exhaust Gasket, Stainless Spiral	10
• Oil and Oil Pump Gaskets					
	95-757	C9437	11286	Outer Oil Pump O-ring All Models 1999 -UP	10
	95-755	C9449	11301	Oil Pump Inner Small O-ring All Models 1999 -UP	10
	95-726	C9294	11293	Oil Pump Inner Med O-ring All Models 1999 -UP	10
	95-726	C9294	11293	Oil Filter Mnt Brkt O-ring All Models 1999 -UP	10
	95-727	C9440	11140	Piston Cooling Jet O-ring All Models 1999 -UP	10
	78-539	C9646	26072-99	Oil Pan Gasket DYNA® 1999 -UP	10
	78-540	C9647	26077-99	Oil Pan Gasket (1) FLT 1999 -UP	10

IMPORT COMETIC COMETIC OEM

NOTE: COMETIC REF# AND OEM REF# FOR REFERENCE PURPOSES ONLY

TWIN CAM® INDIVIDUAL REPLACEMENT GASKETS, SEALS, O-RINGS 1999-UP - CONT'D

MW#	MW#	REF#	REF#	APPLICATION	QTY
• Cam Housing					
	95-822	C9627	11288	Cam Position Sensor O-ring All Models 1999 -UP	10
	95-823	C9631	11298	Cam Suppport Plate Plug O-ring All Models 1999 -UP	10
	78-543	C9575F5	25244-99	Cam Cover Gasket All Models 1999 -UP, AFM .060"	5

EST BIG TWIN EVOLUTION MOTOR KITS

MW#	COMETIC REF#	APPLICATION	QTY
• Complete Gasket Kit			
77-402	C9749F	84'-88 EVO Big Twin 4 & 5 Spd.	kit
77-403	C9750F	84'-91 EVO Big Twin FLT, FXR 5 Spd.	kit
• Big Bore Complete Gasket Kit			
77-453	C9908	92'-99 3 5/8" Bore complete motor kit	kit
• Top End Gasket Kit			
77-405	C9635	92'-99 EVO Big Twin	kit
77-406	C9747	84'-91 EVO Big Twin	kit
• Evo Big Twin Motor Only Gasket Kit			
77-454	C9890	92'-99 Evo Big Twin Std bore, MOTOR Only Kit	kit
77-455	C9891	84'-91 Evo Big Twin Std bore, MOTOR Only Kit	kit
• Big Bore Top End Gasket Kit			
77-407	C9766	3 5/8" Bore; 92'-99 EVO Big Twin	kit
77-408	C9767	3 5/8" Bore; 84'-91 EVO Big Twin	kit
77-411	C9770	3 3/4" Bore; 92'-99 EVO Big Twin	kit
77-412	C9771	3 3/4" Bore;84'-91 EVO Big Twin	kit
77-409	C9768	3 13/16" Bore; 92'-99 EVO Big Twin	kit
77-410	C9769	3 13/16" Bore; 84'-91 EVO Big Twin	kit
• Rocker Box Rebuild Gasket Kit			
77-413	C9752	92'-99 EVO Big Twin	kit
77-414	C9753	84'-91 EVO Big Twin	kit

STANDARD EVOLUTION MOTOR KITS

MW#	COMETIC REF#	OEM REF#	APPLICATION	QTY
• Complete Gasket Kits for Evo Big Twin 1340				
77-300	C9748F	17041-92A	1992 & later Big Twin 1340 Evo 4 & 5 Spd. Softails® & Dyna®	kit
77-301	C9751F	17035-83A	1984-91 Big Twin Evo 1340	kit
77-302	C9750F	17035-84	1984-91 Big Twin Evo 1340 FLT, FXR, 5 Spd.	kit
	For all Big Twin Models from 1984 to present. (Kit contain valve stem seals, umbrella valve rocker covers and exhaust gaskets)			
• Top End Kits for Evo Big Twin 1340				
77-304	C9077	17040-92A	1992-99 Big Twin 1340 Evo	kit
77-305	C9074	17033-83A	1984-91 Big Twin Evo 1340 4 & 5 Spd. Softails® & Dyna®, FLT's, FXR's	kit
(Kit contains all of the necessary gaskets, seals and o-rings to rebuild the motor from the cylinder base up. Fits all Evo models either 4-speed or 5 speed. Head Gaskets are .043" & Base Gaskets are .020"thick.)				
• Rocker Box Kits for Evo Big Twin 1340				
77-306	C9078	17042-92	1992-99 All Big Twin Evo's	kit
77-307	C9075	17038-90	1984-91 All Big Twin Evo's Standard or Big Bore	kit
(Kit contains nitrile rubber components, vulcanized fiber stud and copper stud washers)				
• Big Bore Evo 1340 Top End Gasket Kits				
77-336	C9112		3 5/8" Bore 1992-99 Big Twin 1340	kit
77-337	C9767		3 5/8" Bore 1984-91 Big Twin 1340	kit
77-340	C9476		3 3/4" Bore 1984-91 Big Twin 1340	kit
77-341	C9477		3 3/4" Bore 1992-99 Big Twin 1340	kit
77-338	C9472		3 13/16" Bore 1992-99 Big Twin 1340	kit
77-339	C9473		3 13/16" Bore 1984-91 Big Twin 1340	kit
(Kit contains all of the necessary gaskets, seals and o-rings to rebuild your 3 5/8", 3 13/16" or 3 3/4" Evo Big Bore motor from the cylinder base up.)				

1984-99 BIG TWIN EVO INDIVIDUAL REPLACEMENT GASKETS, SEALS, O-RINGS

IMPORT MW#	COMETIC MW#	COMETIC REF#	OEM REF#	APPLICATION	QTY
• Rocker Box Gaskets					
	78-401	C9481	26856-89	93'-UP Umbrella Valve Seal	10
78-443	**78-548**	C9400	6114	84'-99 Rocker Box Washer copper	10
	78-444	C9286	63858-49	84'-99 Rocker Box Washer paper	10
	78-549	C9706	17356-84	84'-91 Upper Rocker Cover Gasket cork	5
	78-364	C9277	17356-84A	84'-91 Upper Rocker Cover Gasket rubber	5
	78-365	C9278	17356-92	92'-99 Upper Rocker Cover Gasket rubber	5
	78-366	C9283	17358-84A	84'-99 Inner Rocker Cover Gasket rubber	5
	78-550	C9708	17355-84	84'-91 Lower Rocker Cover Gasket cork	5
	78-362	C9281	17355-84A	84'-91 Lower Rocker Cover Gasket rubber	5
	78-363	C9282	17355-92	92'-99 Lower Rocker Cover Gasket rubber	5
	78-551	C9561	16778-97X	84'-99 Lower Right Rocker Gasket .020" rubber coated steel	5
	78-356	C9285	16778-84A	84'-99 Lower Right Rocker Gasket fiber	5
	78-552	C9563	16779-97X	84'-99 Lower Left Rocker Gasket .020" rubber coated steel	5
	78-357	C9284	16779-84A	84'-99 Lower Left Rocker Gasket fiber	5
	78-553	C9865		84'-99 One piece Rocker Base all Evo's .020" rubber coated steel	2
• Pushrod and Tappet Guide Gaskets					
95-716	**95-726**	C9292	11157	84'-99 Upper Pushrod Tube O-ring	25
95-241	**95-826**	C9459	11132	84'-99 Middle Pushrod Tube O-ring	25
95-713	**95-827**	C9293	11145	84'-99 Lower Pushrod Tube O-ring	25
	78-373	C9297	18633-48D	84'-99 Rear Tappet Block Gasket Hi Density Fiber	10
	78-374	C9298	18634-48C	84'-99 Front Tappet Block Gasket Hi Density Fiber	10
	77-456	C9586		84'-99 Evo Pushrod O-ring Set	Kit
• Head and Base Gaskets					
	78-246	C9688		Stock Bore EVO's 3.570" .030" "MLS" Design	2
	78-247	C9689		Stock Bore EVO's 3.570" .040" "MLS" Design	2
	78-248	C9690		3 5/8" Big Bore EVO's .030" "MLS" Design	2
	78-249	C9691		3 5/8" Big Bore EVO's .040" "MLS" Design	2
	78-252	C9694		3 3/4" Big Bore EVO's .030" "MLS" Design	2
	78-253	C9695		3 3/4" Big Bore EVO's .040" "MLS" Design	2
	78-250	C9692		3 13/16" Big Bore EVO's .030" "MLS" Design	2
	78-251	C9693		3 13/16" Big Bore EVO's .040" "MLS" Design	2
	78-537	C9836		84'-99 Valve Guide Seals "VITON"	25
	95-744	C9023	18001-83A	84'-99 Valve Guide Seals "Teflon"	25
95-754	**95-817**	C9287	26432-76A	84'-99 Cylinder Stud Insert O-ring	10
	78-254	C9537	16770-84B	84'-99 Std. Bore Fire Ring Head Gasket .043" CFM-20	5
	78-352	C9269		84'-99 Std. Bore Fire Ring Head Gasket .059" CFM-20	5
	78-554	C9551		84'-99 Stock Sleeve Cylinder Base Gasket .020" Rubber Coated Steel	2
	78-555	C9009	16774-86	84'-99 Stock Sleeve Cylinder Base Gasket .020' Fiber	2
	78-556	C9034	16773-85	84'-99 3 5/8" Fire Ring Head Gasket .043" CFM-20	2
	78-557	C9615	16777-86S	84'-99 3 5/8" Base Gasket .020" Fiber	2
	78-558	C9552		84'-99 3 5/8" Base Gasket .020" Rubber Coated Metal	2
	78-559	C9709		84'-99 3 3/4" Fire Ring Head Gasket .043" CFM-20	2
	78-560	C9615		84'-99 3 3/4" Base Gasket .020" Fiber	2
	78-561	C9082		84'-99 3 13/16" Head Gasket .043" Copper	2
	78-562	C9617		84'-99 3 13/16" Base Gasket .020" Fiber	2
	78-563	C9609		84'-99 4" Head Gasket .043" copper w / Axtell Cyl.	2
• EVO Cam Service Kits					
	77-457	C9623		1970-92 All Big Twins	Kit
	77-458	C9624		1993-99 All Big Twins	Kit
• Cam Housing Gaskets					
	78-379	C9328F5	25225-93	93'-99 Cam Cover Gasket AFM	5
	78-378	C9302F5	25225-70B	84'-92 Cam Cover Gasket AFM	5
78-148	**78-422**	C9306	32591-80	84'-99 Point Cover Gasket	EA/10
95-777	**78-564**	C9350	83162-51DL	84'-99 Point Seal double lip	5

1984-99 BIG TWIN EVO INDIVIDUAL REPLACEMENT GASKETS, SEALS, O-RINGS

IMPORT MW#	COMETIC MW#	COMETIC REF#	OEM REF#	APPLICATION	
• Oil Pump Gaskets and Seals					
	95-828	C9435	11105	84'-99 Oil Pump Cap O-ring	25
	95-727	C9440	11241	92'-99 Oil Pump Cover O-ring	25
	95-753	C9349	26227-58	84'-99 Oil Pump Drive Gear Seal	5
	78-396	C9383	26273-92	92'-99 Oil Pump Body Gasket paper	10
	78-395	C9381	26273-80B	84'-91 Oil Pump Body Gasket paper	10
	78-397	C9382	26276-80A	84'-91 Oil Pump Cover Gasket paper	10
	78-398	C9384	26276-92	92'-99 Oil Pump Cover Gasket paper	10
• Misc. O-ring and Seal					
—	**95-829**	C9438	11170	95'-99 Crankshaft Postion Sensor O-ring	10/25
95-731	**95-830**	C9351	12026B	84'-99 Sprocket Shaft Seal	5

MOTOR KITS FOR SHOVELHEAD & PANHEAD MOTORS

MW#	COMETIC REF#	OEM REF#	APPLICATION	QTY
EST MOTOR KITS FOR SHOVELHEAD & PANHEAD MOTORS				
• Complete EST Gasket Kits for Shovelhead/Panhead				
78-624	C9900	17029-66	1966-69 74" Shovelhead FL, FLH	kit
78-625	C9964	17029-70A	1970-84 74" & 80" Shovelhead 4 Spd.	kit
78-626	C9965	17029-80	1980-84 80" Shovelhead 5 Spd. FLT	kit
78-627	C9966	17028-48	1948-65 Panhead FL, FLH	kit
• Top End EST Gasket Kits for Shovelhead/Panhead				
78-628	C9967	17034-66X	1966-84 74" & 80" Shovelhead 4 or 5 Spd.	kit
78-629	C9968	17034-48	1948-65 Panhead FL, FLH	kit
• Big Bore Shovelhead Top End Gasket Kits				
78-630	C9918		3 5/8" Bore 1966-84 All Models	kit
78-631	C9969		3 13/16" Bore 1966-84 All Models	kit

EST Kits contain MLS head gaskets, steel viton coated base gaskets and AFM material

STANDARD MOTOR KITS FOR SHOVELHEAD & PANHEAD MOTORS

• Complete Gasket Kits for Shovelhead/Panhead

77-330	C9900	17029-66	1966-69 74" Shovelhead FL, FLH	kit
77-331	C9154	17029-70A	1970-84 74" & 80" Shovelhead 4 Spd.	kit
77-332	C9965	17029-80	1980-84 80" Shovelhead 5 Spd. FLT	kit
77-333	C9041F	17028-48	1948-65 Panhead FL, FLH	kit

(Kit contains all of the necessary gaskets, seals and o-rings and washers to completely overhaul any Shovelhead from 1966 thru 1984, or Panhead from 1948-65. Head Gaskets are .043" CFM-20 and Base Gaskets are .031")

• Top End Gasket Kits for Shovelhead/Panhead

77-334	C9118	17034-66X	1966-84 74" & 80" Shovelhead 4 or 5 Spd.	kit
77-335	C9042	17034-48	1948-65 Panhead FL, FLH	kit

Head Gaskets are .043" CFM-20 and Base Gaskets are .031".

• Big Bore Shovelhead Top End Gasket Kits

77-459	C9941		3 5/8" Bore 1966-84 All Models, .043" CFM20 Head Gaskets	kit
77-347	C9474		3 5/8" Bore 1966-84 All Models	kit
77-348	C9475		3 13/16" Bore 1966-84 All Models	kit

(Kit contains all of the necessary gaskets, seals, o-rings and washers needed to rebuild your 3 5/8" or 3 13/16" motor from the cylinder base up. Head Gaskets are .032" copper and Base Gaskets are .031")

• Rocker Housing Gaskets and O-rings

78-632	C9986	17540-69	66'-84 Rocker Cover Gasket .020" Viton Coated Embossed Steel	2
78-368	C9336	17540-69	66'-84 Rocker Cover Gasket .031" Fiber	10
78-369	C9342	17541-48A	48'-65 Rocker Cover Gasket .031" Fiber	10
78-367	C9346	17507-48	48'-65 Rocker Cover Felt Pad	10
95-701	C9451	11101	66'-84 Rocker Shaft O-ring	25
95-743	C9424	18000-81	L81'-84 Valve Guide Seal "Teflon"	25
78-370	C9419	18196-51	51'-29 Valve Guide Gasket	20
78-633	C9998		Late Shovelhead & .625" O.D. Guides "Viton" Seal with garter	20

MOTOR KITS FOR SHOVELHEAD & PANHEAD MOTORS

IMPORT MW#	COMETIC MW#	COMETIC REF#	OEM REF#	APPLICATION	QTY
• Push Rod O-rings and Tappet Block Gaskets					
	95-853	C9598	17955-36	36'-E79 Push Rod Cover Small cork	25
95-742	**95-854**	C9606	17955-48	48'-E79 PushRod Cover Large cork	10/25
95-701		C9451	11101	L79'-E81 Push Rod Cover O-ring Upper	10
	95-855	C9459	11132	L79'-84 Push Rod Cover O-ring Middle	25
	95-856	C9460	11133	L79'-E81 Push Rod Cover O-ring Lower	10
	95-857	C9711	11118	L81'-84 Push Rod Cover O-ring Upper	25
95-711		C9461	11133	L79'-E81 Push Rod Cover Quad Seal Lower	10
	78-373	C9297	18633-48D	48'-84 Rear Tappet Block Gasket .020" Fiber	10
	78-374	C9298	18634-48C	48'-84 Front Tappet Block Gasket .020" Fiber	10
• Head and Base Gaskets					
	78-634	C9984	16770-66X	66'-84 Shovelhead "MLS" Stock Bore Head Gasket 74" & 80" .040"	2
	78-635	C9985		66'-84 Shovelhead "MLS" 3 5/8 BB Head Gasket .040"	2
	78-636	C9987		66'-84 Shovelhead Base Front & Rear .020" "Viton"	2
	78-637	C9988		66'-84 Shovelhead Base 3 5/8 Front & Rear .020" "Viton"	2
	78-638	C9989		66'-84 Shovelhead Base 3 5/8 2 Fronts for S&S® Cylinders "Viton"	2
	78-61	C9604	16770-66X	66'-84 Shovelhead Fire Ring Stock Bore Head Gasket; .043" CFM-20	1
	78-639	C9714		66'-84 Shovelhead Stock Bore Head Gasket; .032" Copper	2
	78-640	C9713		66'-84 Shovelhead 3 5/8" Copper Head Gasket: .032"	2
	78-641	C9618		66'-84 Shovelhead 3 5/8" Base Gasket: .031" Fiber	2
	78-642	C9893		66'-84 Shovelhead 3 13/16" Base Gasket: .020" RC Metal	2
	78-643	C9567	16776-48	48'-84 Pan/Shovel Front Cyl. Std. Bore base Gasket; .031 Fiber	10
	78-644	C9568	16777-48	48'-84 Pan/Shovel Rear Cyl. Std. Bore base Gasket; .031 Fiber	10
	78-645	C9712		48'-84 Shovelhead Fire Ring 3 5/8" Big Bore Head Gasket	10
	78-646	C9613	16770-48X	48'-65 Panhead Fire Ring Stock Bore Head Gasket; .043" CFM-20	2
• Cam Service Kits					
	77-457	C9623		1970-92 All Big Twins	Kit
• Cam / Gear Housing Gaskets and Seals					
	78-377	C9334F5	25225-36C	41'-69 Gear Cover Gasket, AFM60	5
	78-378	C9302F5	25225-70B	70'-84 Cam Cover Gasket, AFM60	5
	78-421	C9323	32591-70	70'-79 Points Cover Gasket	10
	78-422	C9306	32591-80	80'-84 Points Cover Gasket	10
95-777		C9350	83162-51DL	70'-84 Cam Cover Seal / Double Lip	5
	78-419	C9337	32521-36	36'-64 Timer Base Gasket	10
• Intake and Exhaust Gaskets					
95-760		C9453	27060-55	55'-E78 Manifold to Head O-ring	10
	95-864	C9608	27062-78	L78'-84 Intake Seal Manifold to Head Rubber Band	10
	• Oil Pump and Related Gaskets / Seals				
95-703		C9435	111.05	L70'-84 Oil Screen Pump Plug O-ring	10
	95-753	C9349	26227-58	68'-84 Oil Pump Seal	5
	78-647	C9715	26231-78	54'-80 Oil Pump Relief Plug Gasket	10
	78-384	C9397	26244-37	37'-59 Oil Pump Body Gasket	10
	78-385	C9393	26245-41	41'-67 Oil Pump Gasket Fiber	10
	78-387	C9391	26246-68D	68'-E80 Oil Pump Body Fiber	10
	78-389	C9394	26257-50A	L50'-67 Oil Pump Cover Fiber	10
	78-392	C9392	26258-68D	68'-E80 Oil Pump Cover Gasket Fiber	10
	78-397	C9382	26276-80A	L80'-84 Oil Pump Cover Gasket Fiber	10
	95-773	C9403	62702-52	66'-E70 Oil Screen Plug Gasket	10
95-775		C9365	63529-57	63'-84 Oil Line Sleeve Seal	25
95-731		C9351	12026A	70'-84 Motor Main Shaft Seal	5

NOTE: COMETIC REF# AND OEM REF# FOR REFERENCE PURPOSES ONLY

MW#	COMETIC REF#	OEM REF#	APPLICATION	QTY
EST BUELL FIREBOLT and BLAST				
• **Top End and Complete Motor Rebuild Gasket Kits**				
78-648	C9856		Buell Firebolt Top End Rebuild Kit Std. Bore	kit
78-649	C9857		Buell Firebolt CompleteMotor Rebuild Kit Std. Bore	kit
78-650	C9863		Buell Blast Big Bore Top End Rebuild	kit
78-651	C9864		Buell Blast Big Bore Complete Motor Kit	kit
EST EVO SPORTSTER® MOTOR GASKET KITS				
• **Complete Gasket Kits**				
77-415	C9754F		86'-90 883 EVO Sportster®	kit
77-416	C9755F		91'-03 883 EVO Sportster®	kit
77-417	C9756F		86'-87 1100 EVO Sportster®	kit
77-418	C9757F		88'-90 1200 EVO Sportster®	kit
77-419	C9758F		91'-03 1200 EVO Sportster®	kit
77-460	C9855F		91'-03 1200 EVO Sportster® W / .030" Head Gasket	kit
77-461	C9952		2004-UP 1200 EVO Sportster®	kit
77-462	C9953		2004-UP 1200 EVO Sportster ® W / .030" Head Gasket	kit
• **Top End Gasket Kits**				
77-425	C9759		86'-90 883 EVO Sportster®	kit
77-426	C9760		91'-UP 883 EVO Sportster®	kit
77-427	C9761		86'-87 1100 EVO Sportster®	kit
77-428	C9762		88'-90 1200 EVO Sportster®	kit
77-463	C9907		88'-90 1200 EVO Sportster® W / .030" Head Gasket	kit
77-429	C9763		91'-03 1200 EVO Sportster®	kit
77-464	C9854F		91'-03 1200 EVO Sportster® W / .030" Head Gasket	kit
77-465	C9970		2004-UP 1200 EVO Sportster®	kit
77-466	C9971		2004-UP 1200 EVO Sportster ® W / .030" Head Gasket	kit
• **Big Bore Top End Gasket Kits**				
77-420	C9772		3 3/4" Bore; 86'-90 883 EVO Sportster®	kit
77-421	C9773		3 3/4" Bore; 91'-UP 883 EVO Sportster®	kit
77-422	C9774		3 3/4" Bore; 86'-87 1100 EVO Sportster®	kit
77-423	C9775		3 3/4" Bore; 88'-90 1200 EVO Sportster®	kit
77-424	C9776		3 3/4" Bore; 91'-03 1200 EVO Sportster®	kit
• **Rocker Box Rebuild Gasket Kit**				
77-430	C9764		86'-90 883, 1100, 1200 EVO Sportster®	kit
77-431	C9765		91'-03 883 , 1200 EVO Sportster®	kit
77-467	C9954		2004-UP 883, 1200 EVO Sportster®	kit

All Complete and Top End Gasket kits contain .040" MLS Head Gaskets unless noted and .020" Base Gaskets

STANDARD MOTOR KITS FOR SPORTSTER® AND BUELL®

• **Complete Engine and Top End Gasket Kits for Buell 1200cc Evo Sportster®**				
77-308	C9758F		Complete Engine Kit for 1200cc EVO Sportster® 91'-03	kit
77-309	C9071		Top End Kit for 1200cc EVO Sportster® 91'-03	kit
77-488	C9176		Complete Engine Kit for 1200xl 2007 & later	kit
77-489	C9177		Top End Kit for 1200xl 2007 & later	kit

(Kit contains all the necessary gaskets needed for a total engine rebuild or top end rebuild.
Head Gaskets are .043" & Base Gaskets are .020" thick)

• **Complete Gasket Kits for 883/1100/1200 Evo Sportster®**				
77-310	C9754F		1986-90 XL 883 EVO Sportster® 17026-86	kit
77-311	C9755F	17026-91	1991-03 XL 883 EVO Sportster®	kit
77-312	C9115F	17026-86A	1986-87 XL 1100 EVO Sportster®	kit
77-313	C9757F	17026-88	1988-90 XL 1200 EVO Sportster®	kit
77-308	C9070F	17026-91A	1991-03 XL 1200 EVO Sportster®	kit

(For all EVO Sportsers from 1986 to present. Kit contains all gaskets, oil seals and o-rings.
Head Gaskets are .043" & Base Gaskets are .020" thick)

• **Top End Gasket Kits for 883/1100/1200 Evo Sportster®**				
77-316	C9114	17030-86A	1986-87 XL 1100 EVO Sportster®	kit
77-317	C9068	17030-88A	1988-90 XL 1200 EVO Sportster®	kit
77-309	C9071	17032-91	1991-03 XL 1200 EVO Sportster®	kit

(Kit contains all of the necessary gaskets, seals and o-rings to rebuild the motor from the cylinder base up.
Head Gaskets are .043" & Base Gaskets are .020" thick)

BUELL® & EVO SPORTSTER®

MW#	COMETIC REF#	OEM REF#	APPLICATION	QTY
STANDARD MOTOR KITS FOR SPORTSTER® AND BUELL®				
• **Rocker Box Gasket Kits for 883/1100/1200 Evo Sportster®**				
77-318	C9063	17030-89	1986-90 XL 883, 1100, 1200 EVO Sportster®	kit
77-319	C9066	17030-91	1991-03 XL 883, 1200 EVO Sportster®	kit
Gasket kit description: Includes nitrile rubber components and vulcanized fiber stud washers.				
• **Big Bore Evo 883/1100/1200 Sportster® Top End Gasket Kits**				
77-342	C9470		3 3/4" Bore 1986-90 883 EVO Sportster®	kit
77-343	C9471		3 3/4" Bore 1991-03 883 EVO Sportster®	kit
77-344	C9478		3 3/4" Bore 1986-87 1100 EVO Sportster®	kit
77-345	C9479		3 3/4" Bore 1988-90 1200 EVO Sportster®	kit
77-346	C9776		3 3/4" Bore 1991-03 1200 EVO Sportster®	kit
(Kit contains all of the necessary gaskets, seals and o-rings to rebuild the motor from the cylinder base up. Head Gaskets are .043" & Base Gaskets are .020" thick)				
1986-04 EVO SPORTSTER® INDIVIDUAL REPLACEMENT GASKETS,SEALS, O-RINGS				
• **Rocker Cover Gaskets**				
78-443	C9400	6114	86' Rocker Cover Washer copper	10
78-444	C9286	63858-49	87'- 05 Rocker Cover Washer Gasket	10
78-652	C9014	17353-86A	87'-90 Lower Rocker Cover Gasket rubber	5
78-358	C9279	17353-86	86' Lower Rocker Cover cork	5
78-359	C9280	17353-89	91'-05 Lower Rocker Cover Gasket rubber	5
78-653	C9010	17354-86A	87'-90 Upper Rocker Cover Gasket rubber	5
78-360	C9275	17354-86	86' Upper Rocker Cover cork	5
78-361	C9276	17354-89	91'-03 Upper Rocker Cover Gasket rubber	5
78-366	C9283	17358-84A	86'-05 Center Rocker Cover Gasket rubber	10

IMPORT MW#	COMETIC MW#	COMTEIC REF#	OEM REF#	APPLICATION	QTY
	78-553	C9865	16800-84	86'-04 One piece rocker base gasket .020" rubber coaed steel	2
	78-551	C9561	16778-97X	86'-04 Lower Rckr Cover to Head / Right, .020" Rubber Coated Steel	5
	78-356	C9285	16778-84A	86'-04 Lower Rckr Cover to Head / Right Gasket	5
	78-552	C9563	16779-97X	86'-04 Lower Rckr Cover to Head / Left, .020" Rubber Coated Steel	5
	78-357	C9284	16779-84B	86'-04 Lower Rckr Cover to Head / Left Gasket	5
	78-401	C9481	26856-89	91'-03 Umbrella Valve Seal	10
2004 SPORTSTER® ROCKER BOXES ARE TWO PIECE AND DO NOT USE AN UPPER ROCKER RUBBER GASKET					
• **Head and Base Gaskets**					
	78-246	C9688		Stock Bore EVO's 3.570" .030", "MLS" Design	2
	78-247	C9689		Stock Bore EVO's 3.570" .040", "MLS" Design	2
	78-248	C9690		3 5/8" Big Bore EVO's .030", "MLS" Design	2
	78-249	C9691		3 5/8" Big Bore EVO's .040", "MLS" Design	2
	78-252	C9694		3 3/4" Big Bore EVO's .030", "MLS" Design	2
	78-253	C9695		3 3/4" Big Bore EVO's .040", "MLS" Design	2
	78-250	C9692		3 13/16" Big Bore EVO's .030", "MLS" Design	2
	78-251	C9693		3 13/16" Big Bore EVO's .040", "MLS" Design	2
95-754	**95-817**	C9287	26432-76A	86'-05 Cylinder to Head Dowel O-ring	10
	78-654	C9006	16664-86B	86'-05 883 Stock Bore Head Gasket, .043" CFM-20	2
	78-655	C9718	16665-86	86'-87 1100 Stock Bore Head Gasket , .043" CFM-20	2
	78-254	C9537	16770-84B	88'-05 1200 Stock Bore Head Gasket , .043" CFM-20	5
	78-656	C9553	16774-96	86'-05 Cylinder Base Gasket, .020" Rubber Coated Steel	2
	78-657	C9008	16774-86D	86'-05 Cylinder Base Gasket, .020" Fiber	2
	78-658	C9836		86'-99 Valve Guide Seal "VITON"	25
	95-744	C9023	18001-83A	86'-99 Valve Guide Seal "TEFLON"	25
• **Pushrod and Tappet Block Gaskets and O-rings**					
	78-659	C9955	17976	2004-UP Tappet block gasket	2
	95-858	C9956	11377	2004-UP Upper pushrod tube O-ring	25
95-241	**95-826**	C9459	11132	86'-90 Pushrod Tube O-ring Middle	25
95-713	**95-827**	C9293	11145	86'-90 Pushrod Tube O-ring Lower	25
95-716	**95-726**	C9292	11157	86'-90 Pushrod Tube O-ring Upper	25
95-706		C9448	11110	86'-90 Tappet Screw O-ring	10
95-718		C9443	11167	86'-90 Tappet Block O-ring Upper	10
95-719		C9444	11168	86'-90 Tappet Block O-ring Lower	10
	95-726	C9294	11190	91'-99 Pushrod Tube O-ring Upper, 2004 P/r tube lower	10
	95-740	C9295	17944-89	91'-99 Pushrod Tube O-ring Lower	10
	95-722	C9296	11176	91'-99 Tappet Pin Cover O-ring	10

BUELL® & EVO SPORTSTER®

MW#	COMETIC REF#	OEM REF#	APPLICATION	QTY
• Intake and Exhaust Gaskets				
95-758	C9290	26995-86A	84'-04 Intake manifold to Head/Seal	10
95-759	C9088	27002-89	84'-04 Intake Seal to Carb	1
95-709	C9355	11124-DL	86'-99 Points Cover Seal Double Lip	10
78-422	C9306	32591-80	86'-99 Points Cover Gasket	10
78-501	C9311	25263-86	86'-90 Cam Cover Gasket	1
78-381		25263-86	86'-90 Cam Cover Gasket	5
78-382	C9313F5	25263-90B	91'-03 Cam Cover Gasket	5
78-582	C9944F5	25263-90D	2004-UP Cam Cover Gasket	5
95-765	C9353	35151-74	86'-99 Motor Sprocket Shaft Seal	5
95-819	C9632	12068	2004-UP Motor Sprocket Shaft Seal	5
95-818	C9667	11289	2004-UP Crank position sensor O-ring	5
• Oil Pump and Related Gaskets,Seals, and O-rings				
95-734	C9376	12036A	86'-90 Oil Pump Seal metal	5
95-755	C9449	26433-77	86'-90 Oil Pump Check Valve O-ring	10
95-725	C9439	26434-76A	86'-90 Oil Pump O-ring	10
95-757	C9437	26434-91	91'-UP Oil Pump Cover O-ring	10
78-399	C9399	26495-75	86'-90 Oil Pump Gasket	10
78-400	C9315	26495-89B	91'-UP Oil Pump Gasket	10
78-661	C9962		2004-UP Oil jet assembly gasket	6

IRONHEAD SPORTSTER® KITS

MW#	COMETIC REF#	OEM REF#	APPLICATION	QTY
STANDARD MOTOR KITS FOR 900/1000 SPORTSTER®				
• Complete Gasket Kits for 900/1000 Sportster®				
77-320	C9045F	17026-71	1957-71 900 Sportster® XL, XLH, XLCH	kit
77-321	C9047F	17026-72	1972-E73 1000 Sportster® XLH, XLCH	kit
77-322	C9049F	17026-73L	1973-76 1000 Sportster® XLH, XLCH	kit
77-323	C9051F	17026-79	1977-85 1000 Sportster® XLH, XLCH, XLS Hi-Compression	kit
77-324	C9117F	17026-82	1982-85 1000 Sportster® XLH, XL, XLS Low Compression, .063" Head Gaskets	kit
(Kit contains .032" copper head gaskets and all of the necessary gaskets, seals and o-rings to rebuild t he motor. Base Gaskets are .031")				
• Top End Gasket Kits for 900/1000 Sportster®				
77-325	C9102	17030-57	1957-71 900 Sportster® XL, XLH, XLCH"	kit
77-326	C9103	17030-72	1972-E73 1000 Sportster® XLH, XLCH"	kit
77-327	C9104	17030-72AL	1973-76 1000 Sportster® XLH, XLCH"	kit
77-328	C9052	17030-72B	1977-85 1000 Sportster® XLH, XLCH, XLS Hi-Compression"	kit
77-329	C9116	17030-82	1982-85 1000 Sportster® XLH, XL, XLS" Low Compression, .063" Head Gaskets	kit
Kit contains all of the necessary gaskets, seals and o-rings to rebuild the motor from the cylinder base up. Head Gaskets are .032" copper except where noted and Base Gaskets are .031".				

IRONHEAD SPORTSTER® KITS

IMPORT MW#	COMETIC MW#	COMETIC REF#	OEM REF#	APPLICATION	QTY
1957-85 XL IRONHEAD SPORTSTER® INDIVIDUAL REPLACEMENT GASKETS,SEALS, O-RINGS					
• Rocker Cover Gaskets					
78-443	**78-548**	C9400	6114	86' Rocker Cover Washer copper	10
• Rocker Cover Gaskets,Seals,and O-rings					
95-701		C9451	11101	57'-85 Rocker Arm Shaft O-ring	10
95-706		C9448	11110	83'-85 XR1000 Rocker Shaft O-ring	10
95-798		C9529	11115	83'-85 XR1000 Rocker Arm Shaft O-ring	10
	78-48	C9602	17536-70	57'-85 Rocker Cover Gasket	1
95-775		C9365	63529-57	57'-85 Rubber Sleeve, Oil Line	25
• Head and Base Gaskets					
78-63			16769-57	57'-71 900cc Head Gasket (2); .032 Copper	ea
	78-662	C9698	16769-72A	72'-E73 1000cc Head Gasket , .020" Copper	10
78-243		C9565	16769-73	L73'-85 1000cc Head Gasket , .032" Copper	10
	78-663	C9566	16769-82	L73'-85 1000cc Head Gasket , .043" Copper	10
	78-664	C9699	16774-57	57'-71 900cc Cylinder Base Gasket, .012" fiber	10
	78-665	C9603	16774-72	72'-85 1000cc Cylinder Base Gasket, .031" Fiber	10
• Pushrod and Tappet Block Gaskets, O-rings					
95-700			11100	57'-85 Tappet Guide O-ring (4)	10
	95-826	C9459	11132	79'-85 Pushrod Cover O-ring (4) middle	25
95-716	**95-726**	C9292	11157	84'-85 Pushrod Cover O-ring (4) upper	25
95-730		C9369	12023	83'-85 XR 1000 Pushrod Cover Seal	5
95-741		C9408	17955-36A	57'-E79 Pushrod Cover Seal / rubber	100
• Cam and Timer Compartment Gaskets					
95-703			11102	66'-69 XLH Timer Housing O-ring	25
95-709		C9355	11124DL	71'-85 Timer Compartment Seal / double lip	5
	78-420	C9325	32522-37	57'-64 XL, XLH Timer Base Gasket"	10
	78-527	C9316F5	25224-52A	57'-81 Cam cover Gasket	10
	78-380	C9332	25263-81	82'-85 Cam Cover Gasket	10
	78-421	C9323	32591-70	71'-78 Point Cover Gasket	10
	78-422	C9306	32591-80	80'-85 Ignition Cover Gasket	10
• Oil Pump Gaskets, O-rings and Seals					
	95-734	C9376	12036A	77'-78 / 83'-85 Oil Pump Outer Plate Seal	5
	95-749	C9404	24978-57	57'-76 Oil Strainer Gasket	10
95-221 ea	**95-753**	C9349	26227-58	L58'-76 Oil Pump Oil Seal	5
	78-388	C9390	26256-52	57'-76 Oil Pump Gasket	10
	78-390	C9385	26258-52	57'-E62, 72'-76 Oil Pump Outer Cover Gasket	10
	78-391	C9389	26258-62	L62'-71 Oil Pump Outer Cover Gasket	10
	78-393	C9388	26259-52	57'-E62, 72'-76 Oil Pump Inner Cover Gasket	10
	78-394	C9386	26259-62	L62'-71 Oil Pump Inner Cover Gasket	10
95-754		C9287	26432-76A	77'-85 Oil Pump Body O-ring	10
	95-755	C9449	26433-77	77'-85 Check Valve Oil Pump O-ring	10
	95-756	C9445	26434-76A	77'-85 Oil Pump Cover O-ring	10
	78-399	C9399	26495-75	77'-85 Oil Pump Gasket	10
	78-444	C9286	63858-49	71'-85 Oil Level Screw Gasket	10

COPPER BASE GASKETS

MW#	COMETIC REF#	APPLICATION
COPPER BASE GASKETS (GASKETS ARE SOLD INDIVIDUALLY)		
78-467	C9032	883 - 1200, Engine Builders Set (2 Each .005, .010, .016, .020)
78-468	C9030	883 - 1200, 1986-98, .005”
78-469	C9024	883 - 1200, 1986-98, .010”
78-470	C9028	883 - 1200, 1986-98, .016”
78-471	C9025	883 - 1200, 1986-98, .020”
78-472	C9033	1340, Engine Builders Set (2 Each .005, .010, .016, .020)
78-473	C9031	1340, 1984-98, .005”
78-474	C9026	1340, 1984-98, .010”
78-475	C9029	1340, 1984-98, .016”
78-476	C9027	1340, 1984-98, .020”
78-477	C9600	3 5/8”, Engine Builders Set (2 Each .005, .010, .016, .020)
78-478	C9605	3 5/8”, .005”
78-479	C9610	3 5/8”, .010”
78-480	C9616	3 5/8”, .016”
78-481	C9620	3 5/8”, .020”
78-482	C9700	3 13/16”, Engine Builders Set (2 Each .005, .010, .016, .020)
78-483	C9705	3 13/16”, .005”
78-484	C9710	3 13/16”, .010”
78-485	C9716	3 13/16”, .016”
78-486	C9720	3 13/16”, .020”

6

ATHENA GASKETS

EVOLUTION SPORTSTER®

MW#	ATHENA REF#	PKG. QTY	APPLICATION
STANDARD KITS			
TOP END SETS			
77-592	P400 195 600 751	1	Kit XLH 1100, 86’-87’



STAINLESS STEEL EMBOSSED RUBBER COATED BASE GASKETS FOR EVOLUTION®

78-487	For 883cc thru 1200cc Evolution®, .010”.	SOLD AS PAIR
78-488	For 1340cc Evolution®, .010”.	
78-489	For 3-5/8” Big Bore Evolution®, .010”.	

MISCELLANEOUS MOTOR GASKETS

MW#	OEM REF#	APPLICATION	QTY
95-733	12036	Oil pump oil seal for 1977 thru 1982 XL, XLCH, XLCR & XLS	5
78-355	16777-83A	1340 Fiber base gasket .020" for 1984 & later 1340 Evolution® motors	10
78-371	18198-38	Valve guide washers for 1938 thru 1973 W, WL, G & GE	10
95-746	18257-39	Lower cover cork washer for 1939 thru 1948 Flathead 74" & 80"	10
95-747	18630-26	Spring cover washers for 1939 thru 1948 Flathead 74" & 80"	10
78-372	18631-30	Tappet block gasket for 1930 thru 1973 all Flathead	10
78-375	24921-37	Oil pump relief pipe gasket for 1930 thru 1973 Flathead	10
95-750	24990-52	Panhead check valve seal for 1952 thru 1965 FL & FLH	20
78-386	26246-37	Oil pump bottom cover gasket for 1937 thru 1973 W, WL, WLA, G & GE	10
95-774	63525-92	Oil line seal for 1992 & later all 1340	10



A. CRANKCASE / INNER PRIMARY O-RING GROOVE REPAIR GASKET

If the O-ring groove on your crankcase left side is damaged, we have the solution for you. This .038" foamet gasket replaces the O-ring and will prevent your primary from leaking.

77-928 Primar/Crankcase Gasket. '84 & up Evo & Twin Cam® engines. SOLD EACH

MIDWEST
Motorcycle Supply

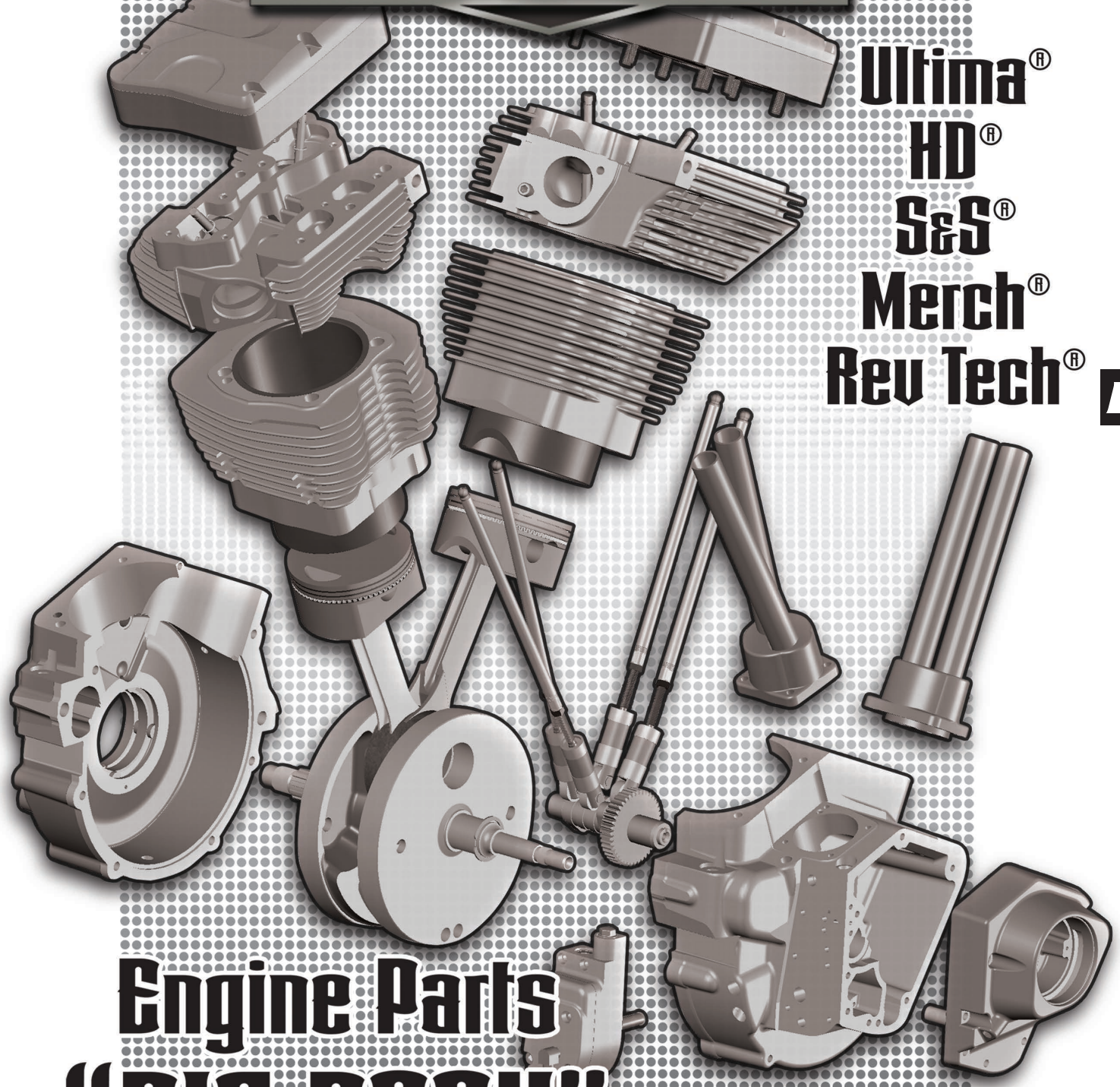

Ultima®
HD®
S&S®
Merch®
Rev Tech®

E

Engine Parts "BIG BOOK"

INTRODUCTION

Welcome to Midwest Motorcycle Supply's Engine Reference Guide.

In an effort to make servicing your V-Twin® engine easier, the staff at Midwest Motorcycle Supply have put together what we believe to be the most comprehensive list of replacement parts for the heart of your motorcycle. We hope that this reference guide serves as more than just a book, we envision this guide as more of a tool that can be used for years to come. Starting with the Evolution® family of engines this
reference guide, through time, will expand to include Shovelhead®, Panhead® & other older Vintage V-Twin® engines.

We would also like to take this time to thank all supporters of Midwest® & Ultima® products. It is because of you that we have grown to be one of the world's leading providers of high quality aftermarket motorcycle parts & accessories. Thank You & Ride Safe!!!

Every attempt has been made to insure proper fitment of our parts for the applications listed in this guide. It is the end users responsibility to exercise good judgement in the part selection, installation & maintenance of their motor when installing parts referred to in this reference guide. Midwest MC Supply has no control over the judgement of others & assumes no responsibility or liability of any nature for the failure of others to use good judgement.

Midwest Motorcycle Supply, Est. in 1971, is one of the world's leading manufacturers and distributors for aftermarket parts and accessories for American made motorcycles. As a manufacturer we have the capability to produce many of the products you are currently purchasing from other distributors . . . at a fraction of the cost! See examples of our product line at ***www.ultimaproducts.com*** We are committed to keeping up to date on industry research and technical data, as well as legislation and sales
demographics & statistics for the benefit of our Dealers.

Ultima Company LLC is not a representative of any other motorcycle engine manufacturer and the parts we sell are not necessarily recommended by any other motorcycle engine manufacturer.
All words used in this catalog denoting any motorcycle engine manufacturer, engine models or part numbers are intended for use as reference only. Although our replacement engines and engine parts are not original factory equipment for some manufacturers, our intention is to provide an exceptional quality replacement part that will outperform the original equipment of many OEM manufacturers. Harley-Davidson® Parts: Harley® and Harley-Davidson® and other model names of Harley® motorcycles are used as a reference only. Some H-D® part numbers are also used as reference only. We are not an authorized Harley® dealer and in no way do we have, or intend to imply any kind of business relationship with Harley-Davidson Motor Company®. Our intention is to provide products that can be used on a Harley-Davidson® motorcycle. Names and words that are registered trademarks of Harley-Davidson® Inc. Milwaukee, WI, such as Evolution®, Harley-Davidson®, Harley®, H-D®, HD®, and Softail® are not intended to imply that they are Harley-Davidson® original equipment by their use in connection with Harley-Davidson® factory part numbers.

All other trademarks, registered trademarks and brand names used in this catalog are the property of their respective holders.

Ultima is not a representative of any other motor or motorcycle manufacturer. All words used in this “Midwest Reference Guide” are intended for use as reference only. Although our motor replacement parts are not original equipment for some motor manufacturers, our intention is to provide an exceptional quality replacement part that meets, exceeds & outperforms the original equipment of many manufacturers. Names & words used in this “Midwest Reference Guide” that are registered trademarks of S&S® Cycle, Merch Performance® & Rev Tech® are not intended to imply that they are S&S® Cycle, Merch Performance® or Rev Tech® original equipment.

WARNING

Serious injury, death and property damage can result from the improper use, control, alteration, or maintenance of motorcycles. The dealer and dealers customers must exercise good judgement in the use, control, alteration, part selection and installation, and maintenance of motorcycles. Ultima® has no control over the judgement of others and assumes no responsibility or liability of any nature for the failure of others to use good judgement.

COPYRIGHT ULTIMA® COMPANY LLC 2021 **REVISED: 01/28/21**

INDEX

A. EVOLUTION®	**PAGE**
1. ULTIMA® 100”, 107” & 113”	4
2. ULTIMA® 120” & 127”	11
3. ULTIMA® 140”	13
4. HARLEY DAVIDSON® 80”	15
5. S&S® 88”, 96”, 100”, 107”, 111”, 113”, 117”, 124”	19
6. MERCH PERFORMANCE® 120”, 125”, 131”	23
7. REVTECH® 88”, 100”, 100” (4X4), 110”	27
B. SHOVELHEAD®	
8. ULTIMA® SHOVELHEAD® 96”	31
9. ULTIMA® SHOVELHEAD® 96”, 3 PIECE CRANK	33
10. HARLEY DAVIDSON® SHOVELHEAD® 74” & 80”	35

ULTIMA® 100, 107, 113 C.I., CE SERIES CASE

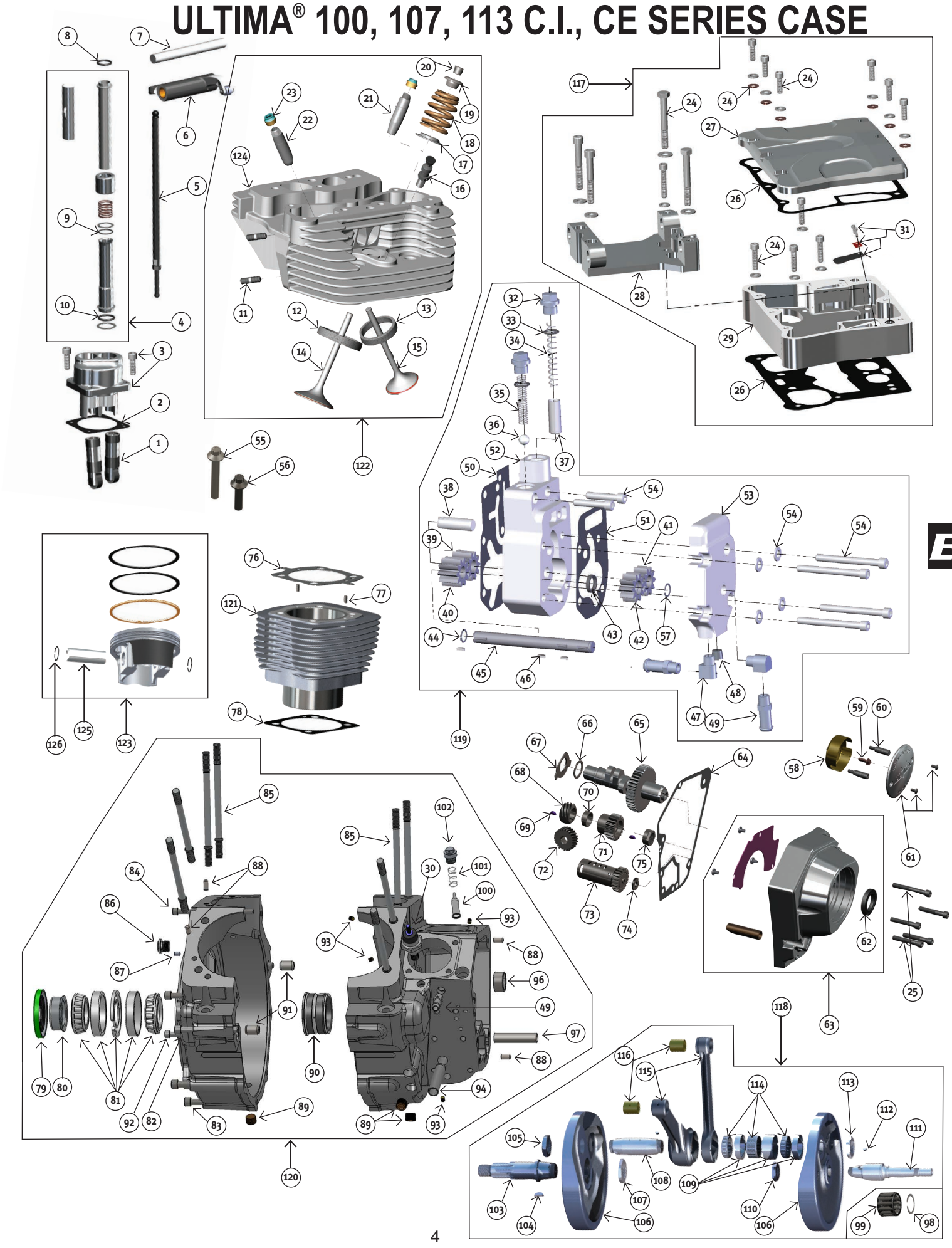

ULTIMA® 100, 107, 113 C.I., CE SERIES CASE

#	PART#	DESCRIPTION	OEM#	QTY
1	91-880	Ultima lifter	18523-86	Sold each
2	77-712	Rear Tappet block gasket		Sold each
	77-713	Front Tappet block gasket		Sold each
3	91-697	Tappet blocks, 4.0" bore motors, w/hardware		Sold as set
4	91-980	Pushrod cover assembly		Sold each
5	91-795	Pushrod set adjustable standard length		Sold as set
6	91-699	Rocker arm set, 1.675 ratio		Sold as set
7	91-666	Rocker arm shaft	17611-83	Sold each
8	78-675	Pushrod O-ring upper	11157	Sold each
9	78-673	Pushrod O-ring middle	11132	Sold each
10	78-674	Pushrod O-ring bottom	11145	Sold each
11	66-242	Exhaust stud	16715-83	Sold each
12	91-569A	2.250"x1.815" Intake valve seat (2.100)		Sold each
13	91-568A	1.880"x1.495" Exhaust valve seat (1.700)		Sold each
14	91-747	Intake valve 2.100"x4.580"		Sold each
15	91-748	Exhaust valve 1.700"x4.620"		Sold each
16	93-772	compression release		Sold each
17	91-337	Conical spring seat		Sold each
18	91-861	Conical valve spring std.		Sold each
19	91-338	Conical spring retainer, steel		Sold each
20	91-339	Ultima® keeper/lock, conical spring, 7 degree		Sold each
21 *	91-780	Valve guide int. std.		Sold each
	91-782	Valve guide int. +.001"		Sold each
	91-784	Valve guide int. +.002"		Sold each
22 *	91-781	Valve guide exh. std.		Sold each
	91-783	Valve guide exh. +.001"		Sold each
	91-785	Valve guide exh. +.002"		Sold each
23	91-770	Valve seal for BT, XL & TC		Sold each
24	89-519	Rkr box hardware kit (2 rocker boxes)		Sold as kit
25	40-614	Cam cover bolt kit		Sold as kit
26	77-109	Rkr box gasket kit (2 rocker boxes), 06'-11', no hole		Sold as kit
	77-111	Rkr box gasket kit (2 rocker boxes), 12'-LTR, cntr hole		Sold as kit
27	89-541	Rkr box cover, 06'-11', no hole		Sold each
	89-544	Rkr box cover, 12'-LTR, cntr hole		Sold each
28	89-545	Rkr box center section, 06'-LTR		Sold each
29	89-540	Rkr box base, 06'-11'		Sold each
	89-543	Rkr box base, 12'-LTR, w/hole		Sold each
30	17-65	Oil pressure switch	26561-84	Sold each
31	89-518	Rkr box reed valve kit (1 rocker box)		Sold as kit
32	41-888	Spring cap	26263-80	Sold as kit
33	95-828	O-ring 84'-99'	11105	Sold pkg. 5
34	98-619	Plunger spring	26207-83	Sold each
35	98-620	Check ball spring	26262-80	Sold each
36	98-617	Check ball	8873	Sold each
37	98-623	Plunger	26400-82	Sold each
38	98-618	Idler pin	26327-68	Sold each
39	98-605	Gear, return idle 10T		Sold each
40	98-604	Gear, return drive 10T		Sold each
41	98-607	Gear, feed idle 10T		Sold each
42	98-606	Gear, feed drive 10T		Sold each
43	95-753	Oil seal	26227-58	Sold pkg. 5
44	98-329	Clip ring	11002	Sold each
45	98-334	Drive shaft	26346-70	Sold each
46	98-272	Woodruff key	26348-15	Sold each
47	21-185	Spigot elbow		Sold each
48	98-622	Pressure plug	45830-48	Sold each
49	21-123	Oil tank vent	63533-41	Sold each
50	98-625	Base gasket 92 & ltr		Sold each
51	98-627	Cover gasket 92 & Ltr		Sold each
52	98-602	Pump base H.O. 92 & ltr pol.		Sold each
53	98-603	Pump cover H.O. 92 & ltr pol.		Sold each
54	41-740	Oil pump hardware kit		Sold each
55	40-616	Head bolt long	16478-85	Sold each
56	40-617	Head bolt short	16480-92	Sold each
57	98-325	Snap ring	26348-36	Sold each
58	53-528	Ignition rotor (gold)	32402-83	Sold each
59	53-529	Ignition rotor screw	2611C	Sold each
60	91-352	Ignition timing screws	32606-82	Sold each
61	89-114	Ignition cover, Ultima® w/screws		Sold each
62	95-222	Oil seal	83162-51	Sold each
63	88-53	Cam cover	25268-84A	Sold each
64	77-715	Gasket, cam cover	25225-70B	Sold each
65	114-68	Cam for 100" Ultima® motor		Sold each
	114-246	Cam for 107" Ultima® motor		Sold each
	114-245	Cam for 113" Ultima® motor		Sold each
66 *	98-378	Cam shim .070"	25554-36	Sold each
	98-375	Cam shim .055"	25551-36	Sold each
	98-376	Cam shim .060"	25552-36	Sold each
	98-377	Cam shim .065"	25553-36	Sold each
	98-379	Cam shim .075"	25555-36	Sold each
	98-380	Cam shim .080"	25556-36	Sold each
67	98-372	Washer, cam thrust	25550-57	Sold each
68	98-359	Gear, oil pump drive	26349-73	Sold each
69	98-305	Woodruff key	23985-54	Sold each
70	98-89	Pinion gear spacer	24703-54B	Sold each
71 *	98-588	Gear, pinion Red	24043-78	Sold each
	98-585	Gear, pinion Orange	24040-78	Sold each
	98-586	Gear, pinion White	24041-78	Sold each
	98-587	Gear, pinion Yellow	24042-78	Sold each
	98-589	Gear, pinion Blue	24044-78	Sold each
	98-590	Gear, pinion Green	24045-78	Sold each
	98-591	Gear, pinion Black	24046-78	Sold each
72	98-358	Gear, oil pump driven	26345-73	Sold each
73 *	98-512	Breather gear std.	25313-77	Sold each
	98-812	Breather gear +.030" 77 & ltr	25313-77	Sold each
74 *	98-80	Breather gear shim .110" 79 & ltr	25313-77A	Sold each
	98-81	Breather gear shim .115" 79 & ltr	25321-79	Sold each
	98-82	Breather gear shim .120" 79 & ltr	25322-79	Sold each
	98-83	Breather gear shim .125" 79 & ltr	25323-79	Sold each
75	98-302	Nut, pinion	24023-54	Sold each
76	78-678	Head gasket, front or rear, .035		Sold each
77	98-540	Dowel pin .250"x.500"		Sold each
78	78-710	Base gasket front		Sold each
	78-711	Base gasket rear		Sold each
79	95-805	Oil seal	12026	Sold each
80	98-360	Spacer, sprocket shaft 71-99 BT	24002-700	Sold each
81	95-320	Bearing & race set	9028	Sold as set
82	300-533	Case bolt 5/16-18 x 2-3/4		Sold each
83	300-534	Case bolt 5/16-18 x 3-1/2		Sold each
84	300-535	Case bolt 1/4-20 x 4.0		Sold each
85	98-547	6.125 Cylinder stud		Sold each
86	98-490A	Timing plug	720	Sold each
87	98-545	Set screw 10-24		Sold each
88	98-540	Dowel pin .250"x.500"		Sold each
89	98-544	1/4 pipe plug for case		Sold each
90	95-429	Bearing race	24599-58B	Sold each
91	300-541	Alignment pin .500" x.500" hollow		Sold each
92	300-125	Case bolt 1/4-20 x 3-1/4		Sold each
93	98-543	3/16 Hi pressure plug		Sold each
94	300-453	Bushing, oil pump 36 & ltr		Sold each
95	-------	----------		Sold each
96	95-173	Cam bearing	9058	Sold each
97	98-542	Breather seperator tube		Sold each
98	98-531	Pinion bearing retaining ring	11177	Sold each
99 *	95-602	Pinion bearing White	24626-87	Sold each
	95-603	Pinion bearing Green	24628-87	Sold each
	95-604	Pinion bearing Red	24641-87	Sold each
	95-605	Pinion bearing Blue	24643-87	Sold each
100	98-510	Screen, crankcase	24981-70	Sold each
101	98-511	Spring, crankcase 70-99 BT	24982-70	Sold each
102	98-538	Screen plug		Sold each
103	98-339	Sprocket shaft 81 & later		Sold each
104	94-137	Woodruff key	23985-56	Sold each
105	98-421	Nut, crank pin 1"-20	23969-83	Sold as pair
106	98-650	Crankshaft halves only 4.250" Stroke 100" & 107"		Sold as set
	98-651	Crankshaft halves only 4.500" Stroke 113"		Sold as set
107	98-539	Nut, sprocket shaft 1-1/8"-16	24017-80	Sold each
108	98-537	Crankpin w/nut & key		Sold as kit
109	95-145	Rod race set for 7.44" rods		Sold as set
110	98-422	Nut, pinion shaft 3/4"-20	24016-80	Sold each
111	98-549	Pinion Shaft .250" longer 100", 107" & 113"		Sold each
112	98-475	Woodruff key	11218	Sold each
113	98-421	Nut, crank pin 1"-20	23969-83	Sold as pair
114	95-259	Rod roller bearings & retainer cage	24385-40B	Sold as kit
115	98-573	Connecting rods H-beam 7.440" w/bushings & races		Sold as set
116	95-142	Replacement wristpin bushing .792"		Sold each
117	89-516	Rocker box set, 06'-11' (2 rocker boxes)		Sold as set
	89-538	Rocker box set, 12'-LTR (2 rocker boxes)		Sold as set
118	98-554	Crank assembly 4.250" Stroke 100" & 107" Complete		Sold each
	98-553	Crank assembly 4.500" Stroke 113" Complete		Sold each
119	98-517	Oil pump complete H.O. 92 & ltr polished		Sold each
	98-520	Oil pump complete H.O. 92 & ltr black		Sold each
120	206-42	Motor case 92 & ltr 3.875" & 4.0" bore. Natural		Sold each
	206-43	Motor case 92 & ltr 3.875" & 4.0" bore. Black		Sold each
	206-72	Motor case 92 & ltr 3.875" & 4.0" bore. Polished		Sold each
121	93-860	100" Front cylinder natural 3.875" bore		Sold each
	93-861	100" Rear cylinder natural 3.875" bore		Sold each
	93-864	100" Front cylinder black 3.875" bore		Sold each
	93-865	100" Rear cylinder black 3.875" bore		Sold each
	93-60	100" Front cylinder polished 3.875" bore		Sold each
	93-61	100" Rear cylinder polished 3.875" bore		Sold each
	93-858	107" , 113" Front cylinder natural 4.0" bore		Sold each
	93-859	107" , 113" Rear cylinder natural 4.0" bore		Sold each
	93-862	107" , 113" Front cylinder black 4.0" bore		Sold each
	93-863	107" , 113" Rear cylinder black 4.0" bore		Sold each
	93-58	107" , 113" Front cylinder polished 4.0" bore		Sold each
	93-59	107" , 113" Rear cylinder polished 4.0" bore		Sold each

ULTIMA® 100, 107, 113 C.I., CE SERIES CASE

#	PART#	DESCRIPTION	OEM#	QTY
122	93-890	Front cylinder head 4.0 natural assembled		Sold each
	93-891	Rear cylinder head 4.0 natural assembled		Sold each
	93-892	Front cylinder head 4.0 black assembled		Sold each
	93-893	Rear cylinder head 4.0 black assembled		Sold each
	93-90	Front cylinder head 4.0 polished assembled		Sold each
	93-91	Rear cylinder head 4.0 polished assembled		Sold each
123 *	93-880	Piston set w/rings,clips,pins 100" 3.875" std		Sold as set
	93-881	Piston set w/rings,clips,pins 100" 3.875" +.005"		Sold as set
	93-882	Piston set w/rings,clips,pins 100" 3.875" +.010"		Sold as set
	93-883	Piston set w/rings,clips,pins 100" 3.875" +.020"		Sold as set
	93-884	Piston set w/rings,clips,pins 100" 3.875" +.030"		Sold as set
*	93-960	Piston set w/rings,clips,pins 107" 4.0" std		Sold as set
	93-961	Piston set w/clips,pins 107" 4.0" +.005"		Sold as set
	93-962	Piston set w/clips,pins 107" 4.0" +.010"		Sold as set
	93-963	Piston set w/clips,pins 107" 4.0" +.020"		Sold as set
	93-964	Piston set w/clips,pins 107" 4.0" +.030"		Sold as set
*	93-885	Piston set w/rings,clips,pins 113" 4.0" std		Sold as set
	93-886	Piston set w/clips,pins 113" 4.0" +.005"		Sold as set
	93-887	Piston set w/clips,pins 113" 4.0" +.010"		Sold as set
	93-888	Piston set w/clips,pins 113" 4.0" +.020"		Sold as set
	93-889	Piston set w/clips,pins 113" 4.0" +.030"		Sold as set
124	93-890M	Ft cyl head 4.0" natural bare w/guides & seats		Sold each
	93-891M	Rr cyl head 4.0" natural bare w/guides & seats		Sold each
	93-892M	Ft cyl head 4.0" black bare w/guides & seats		Sold each
	93-893M	Rr cyl head 4.0" black bare w/guides & seats		Sold each
	93-890P	Ft cyl head 4.0" polished bare w/guides & seats		Sold each
	93-891P	Rr cyl head 4.0" polished bare w/guides & seats		Sold each
125	93-914	Wrist pin 0.792" dia		Sold each
126	93-915	Round wire lock, 0.792" dia pin		Sold each

E

Every attempt has been made to insure proper fitment of our parts for the applications listed in this guide. It is the end users responsibility to exercise good judgement in the part selection, installation & maintenance of their motor when installing parts referred to in this reference guide. Midwest MC Supply has no control over the judgement of others & assumes no responsibility or liability of any nature for the failure of others to use good judgement.

*** DENOTES STANDARD PRODUCTION PART USED WHEN OPTIONS ARE AVAILABLE**

ULTIMA® 100, 107, 113 C.I., JL SERIES CASE

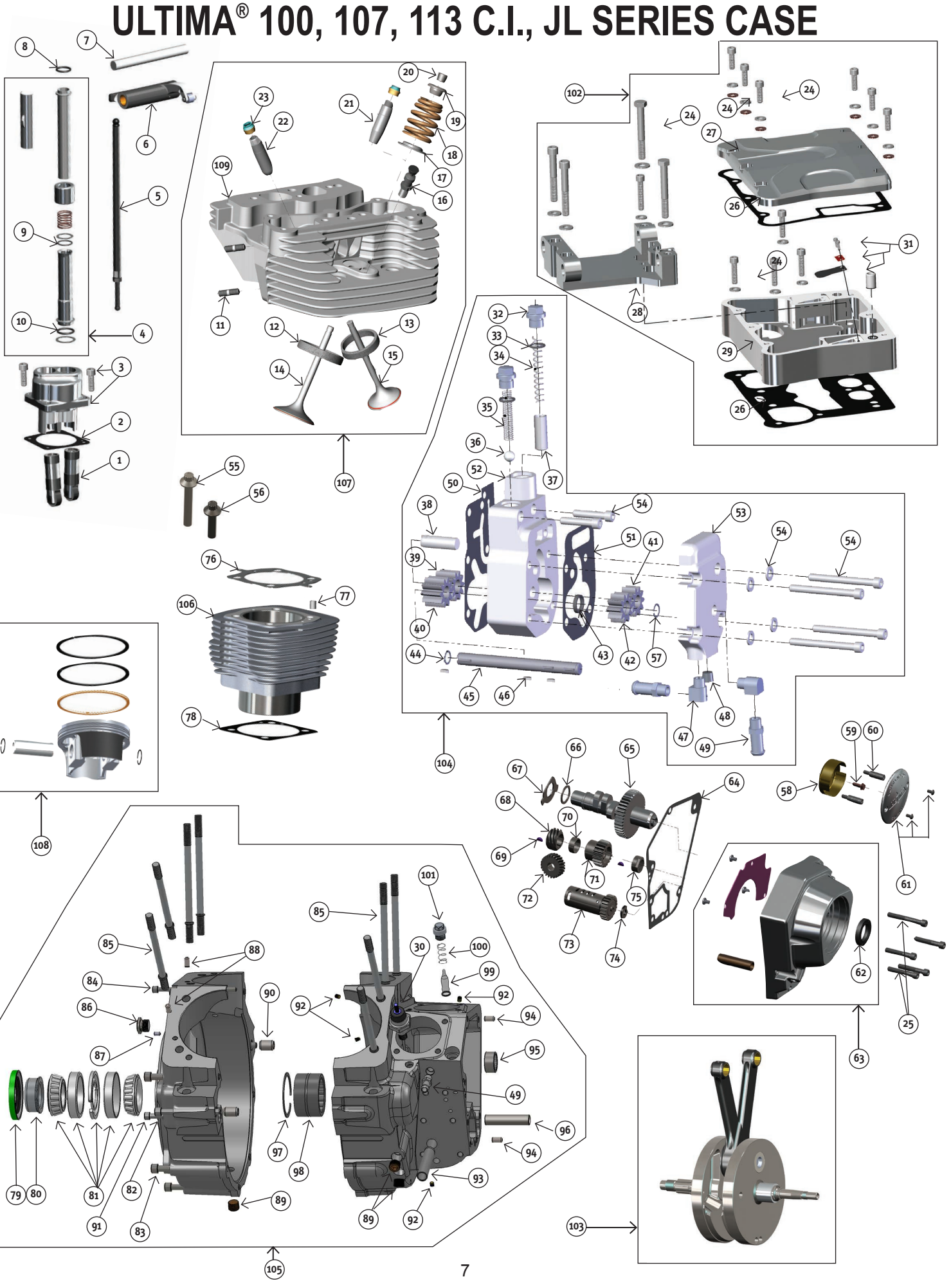

ULTIMA® 100, 107, 113 C.I., JL SERIES CASE

#	PART#	DESCRIPTION	OEM#	QTY
1	91-880	Ultima® lifter	18523-86	Sold each
2	77-712	Rear Tappet block gasket		Sold each
	77-713	Front Tappet block gasket		Sold each
3	91-697	Tappet blocks big bore motors, w/hardware		Sold as set
4	91-980	Pushrod cover assembly		Sold each
5	91-797	Pushrod set adjustable + .200"		Sold as set
6	91-699	Rocker arm set, 1.675 ratio		Sold as set
7	91-666	Rocker arm shaft	17611-83	Sold each
8	78-675	Pushrod O-ring upper	11157	Sold each
9	78-673	Pushrod O-ring middle	11132	Sold each
10	78-674	Pushrod O-ring bottom	11145	Sold each
11	66-242	Exhaust stud	16715-83	Sold each
12	91-569A	2.250"x1.815" Intake valve seat (2.100)		Sold each
13	91-568A	1.880"x1.495" Exhaust valve seat (1.700)		Sold each
14	91-747	Intake valve 2.100"x4.580"		Sold each
15	91-748	Exhaust valve 1.700"x4.620"		Sold each
16	93-772	compression release		Sold each
17	91-337	Conical spring seat		Sold each
18	91-861	Conical valve spring std.		Sold each
19	91-338	Conical spring retainer, steel		Sold each
20	91-339	Ultima® keeper/lock, conical spring, 7 degree		Sold each
21 *	91-780	Valve guide int. std.		Sold each
	91-782	Valve guide int. +.001"		Sold each
	91-784	Valve guide int. +.002"		Sold each
22 *	91-781	Valve guide exh. std.		Sold each
	91-783	Valve guide exh. +.001"		Sold each
	91-785	Valve guide exh. +.002"		Sold each
23	91-770	Valve seal for BT, XL & TC		Sold each
24	89-519	Rkr box hardware kit (2 rocker boxes)		Sold as kit
25	40-614	Cam cover bolt kit		Sold as kit
26	77-109	Rkr box gasket kit (2 rocker boxes), 06'-11', no hole		Sold as kit
	77-111	Rkr box gasket kit (2 rocker boxes), 12'-LTR, cntr hole		Sold as kit
27	89-541	Rkr box cover, 06'-11', no hole		Sold each
	89-544	Rkr box cover, 12'-LTR, cntr hole		Sold each
28	89-545	Rkr box center section, 06'-LTR		Sold each
29	89-540	Rkr box base, 06'-11'		Sold each
	89-543	Rkr box base, 12'-LTR, w/hole		Sold each
30	17-65	Oil pressure switch	26561-84	Sold each
31	89-518	Rkr box reed valve kit (1 rocker box)		Sold as kit
32	41-888	Spring cap	26263-80	Sold as kit
33	95-828	O-ring 84-99	11105	Sold pkg. 5
34	98-619	Plunger spring	26207-83	Sold each
35	98-620	Check ball spring	26262-80	Sold each
36	98-617	Check ball	8873	Sold each
37	98-623	Plunger	26400-82	Sold each
38	98-618	Idler pin	26327-68	Sold each
39	98-605	Gear, return idle 10T		Sold each
40	98-604	Gear, return drive 10T		Sold each
41	98-607	Gear, feed idle 10T		Sold each
42	98-606	Gear, feed drive 10T		Sold each
43	95-753	Oil seal	26227-58	Sold pkg. 5
44	98-329	Clip ring	11002	Sold each
45	98-334	Drive shaft	26346-70	Sold each
46	98-272	Woodruff key	26348-15	Sold each
47	21-185	Spigot elbow		Sold each
48	98-622	Pressure plug	45830-48	Sold each
49	21-123	Spigot tube	63533-41	Sold each
50	98-625	Base gasket 92 & ltr		Sold each
51	98-627	Cover gasket 92 & Ltr		Sold each
52	98-602	Pump base H.O. 92 & ltr pol.		Sold each
53	98-603	Pump cover H.O. 92 & ltr pol.		Sold each
54	41-740	Oil pump hardware kit		Sold each
55	40-616	Head bolt long	16478-85	Sold each
56	40-617	Head bolt short	16480-92	Sold each
57	98-325	Snap ring	26348-36	Sold each
58	53-528	Ignition rotor (gold)	32402-83	Sold each
59	53-529	Ignition rotor screw	2611C	Sold each
60	91-352	Ignition timing screws	32606-82	Sold each
61	89-114	Ignition cover, Ultima w/screws		Sold each
62	95-222	Oil seal	83162-51	Sold each
63	88-53	Cam cover	25268-84A	Sold each
64	77-715	Gasket, cam cover	25225-70B	Sold each
65	114-68	Cam for 100" Ultima® motor		Sold each
	114-246	Cam for 107" Ultima® motor		Sold each
	114-245	Cam for 113" Ultima® motor		Sold each
66 *	98-378	Cam shim .070"	25554-36	Sold each
	98-375	Cam shim .055"	25551-36	Sold each
	98-376	Cam shim .060"	25552-36	Sold each
	98-377	Cam shim .065"	25553-36	Sold each
	98-379	Cam shim .075"	25555-36	Sold each
	98-380	Cam shim .080"	25556-36	Sold each
67	98-372	Washer, cam thrust	25550-57	Sold each
68	98-359	Gear, oil pump drive	26349-73	Sold each
69	98-305	Woodruff key	23985-54	Sold each
70	98-89	Pinion gear spacer	24703-54B	Sold each
71 *	98-588	Gear, pinion Red	24043-78	Sold each
	98-585	Gear, pinion Orange	24040-78	Sold each
	98-586	Gear, pinion White	24041-78	Sold each
	98-587	Gear, pinion Yellow	24042-78	Sold each
	98-589	Gear, pinion Blue	24044-78	Sold each
	98-590	Gear, pinion Green	24045-78	Sold each
	98-591	Gear, pinion Black	24046-78	Sold each

#	PART#	DESCRIPTION	OEM#	QTY
72	98-358	Gear, oil pump driven	26345-73	Sold each
73 *	98-512	Breather gear std.	25313-77	Sold each
	98-812	Breather gear +.030" 77 & ltr	25313-77	Sold each
74 *	98-80	Breather gear shim .110" 79 & ltr	25313-77A	Sold each
	98-81	Breather gear shim .115" 79 & ltr	25321-79	Sold each
	98-82	Breather gear shim .120" 79 & ltr	25322-79	Sold each
	98-83	Breather gear shim .125" 79 & ltr	25323-79	Sold each
75	98-302	Nut, pinion	24023-54	Sold each
76	78-678	Head gasket, front or rear		Sold each
77	98-540	Dowel pin .250"x.500"		Sold each
78	78-710	Base gasket front		Sold each
	78-711	Base gasket rear		Sold each
79	95-805	Oil seal	12026	Sold each
80	98-360	Spacer, sprocket shaft 71-99 BT	24002-700	Sold each
81	95-320	Bearing & race set	9028	Sold as set
82	300-533	Case bolt 5/16-18 x 2-3/4		Sold each
83	300-534	Case bolt 5/16-18 x 3-1/2		Sold each
84a	300-535	Case bolt 1/4-20 x 4.0		Sold each
85	98-547	6.125 Cylinder stud		Sold each
86	98-490A	Timing plug		Sold each
87	98-545	Set screw 10-24		Sold each
88	98-540	Dowel pin .250"x.500"		Sold each
89	98-544	1/4 pipe plug for case		Sold each
90	300-541	Alignment pin .500" x.500" hollow		Sold each
91	300-125	Case bolt 1/4-20 x 3-1/4		Sold each
92	98-543	3/16 Hi pressure plug		Sold each
93	300-453	Bushing, oil pump 36 & ltr		Sold each
94	98-540	Dowel pin .250"x.500"		Sold each
95	95-173	Cam bearing	9058	Sold each
96	98-542	Breather seperator tube		Sold each
97	98-581	Case pinion bearing retaining ring		Sold each
98	95-809	Needle bearing 1.5" shaft 1.25" width	24626-87	Sold each
99	98-510	Screen, crankcase	24981-70	Sold each
100	98-511	Spring, crankcase 70-99 BT	24982-70	Sold each
101	98-538	Screen plug		Sold each
102	89-516	Rocker box set, 06'-11' (2 rocker boxes)		Sold as set
	89-538	Rocker box set, 12'-LTR (2 rocker boxes)		Sold as set
103	98-631	Crank assembly 4.250" Stroke 100/107" Complete		Sold each
	98-521	Crank assembly 4.500" Stroke 113" Complete		Sold each
104	98-517	Oil pump complete H.O. 92 & ltr polished		Sold each
	98-520	Oil pump complete H.O. 92 & ltr black		Sold each
105	206-70	Motor case 92 & ltr 4.000" bore. natural		Sold each
	206-71	Motor case 92 & ltr 4.000" bore. black		Sold each
	206-73	Motor case 92 & ltr 4.000" bore. Polished		Sold each
106	93-860	100" Front cylinder natural 3.875" bore		Sold each
	93-861	100" Rear cylinder natural 3.875" bore		Sold each
	93-864	100" Front cylinder black 3.875" bore		Sold each
	93-865	100" Rear cylinder black 3.875" bore		Sold each
	93-60	100" Front cylinder polished 3.875" bore		Sold each
	93-61	100" Rear cylinder polished 3.875" bore		Sold each
	93-858	107/113" Front cylinder natural 4.00" bore		Sold each
	93-859	107/113" Rear cylinder natural 4.00" bore		Sold each
	93-862	107/113" Front cylinder black 4.00" bore		Sold each
	93-863	107/113" Rear cylinder black 4.00" bore		Sold each
	93-58	107/113" Front cylinder polished 4.00" bore		Sold each
	93-59	107/113" Rear cylinder polished 4.00" bore		Sold each
107	93-890	Front cylinder head 4.00" natural assembled		Sold each
	93-891	Rear cylinder head 4.00" natural assembled		Sold each
	93-892	Front cylinder head 4.00" black assembled		Sold each
	93-893	Rear cylinder head 4.00" black assembled		Sold each
	93-90	Front cylinder head 4.00" polished assembled		Sold each
	93-91	Rear cylinder head 4.00" polished assembled		Sold each
108 *	93-185	Piston set w/rings,clips,pins 100" 3.875" std		Sold as set
	93-186	Piston set w/rings,clips,pins 100" 3.880" +.005"		Sold as set
	93-187	Piston set w/rings,clips,pins 100" 3.885" +.010"		Sold as set
	93-188	Piston set w/rings,clips,pins 100" 3.895" +.020"		Sold as set
	93-189	Piston set w/rings,clips,pins 100" 3.905" +.030"		Sold as set
*	93-180	Piston set w/rings,clips,pins 107" 4.00" std		Sold as set
	93-181	Piston set w/clips,pins 107" 4.005" +.005"		Sold as set
	93-182	Piston set w/clips,pins 107" 4.010" +.010"		Sold as set
	93-183	Piston set w/clips,pins 107" 4.020" +.020"		Sold as set
	93-184	Piston set w/clips,pins 107" 4.030" +.030"		Sold as set
	93-175	Piston set w/rings,clips,pins 113" 4.00" std		Sold as set
	93-176	Piston set w/clips,pins 113" 4.005" +.005"		Sold as set
	93-177	Piston set w/clips,pins 113" 4.010" +.010"		Sold as set
	93-178	Piston set w/clips,pins 113" 4.020" +.020"		Sold as set
	93-179	Piston set w/clips,pins 113" 4.030" +.030"		Sold as set
109	93-890M	Ft cyl head 4.000" natural bare w/guides & seats		Sold each
	93-891M	Rr cyl head 4.000" natural bare w/guides & seats		Sold each
	93-892M	Ft cyl head 4.000" black bare w/guides & seats		Sold each
	93-893M	Rr cyl head 4.000" black bare w/guides & seats		Sold each
	93-890P	Ft cyl head 4.000" polished bare w/guides & seats		Sold each
	93-891P	Rr cyl head 4.000" polished bare w/guides & seats		Sold each

Every attempt has been made to insure proper fitment of our parts for the applications listed in this guide. It is the end users responsibility to exercise good judgement in the part selection, installation & maintenance of their motor when installing parts referred to in this reference guide. Midwest MC Supply has no control over the judgement of others & assumes no responsibility or liability of any nature for the failure of others to use good judgement.

* DENOTES STANDARD PRODUCTION PART USED WHEN OPTIONS ARE AVAILABLE

ULTIMA® 100, 107, 113 C.I., KN SERIES CASE

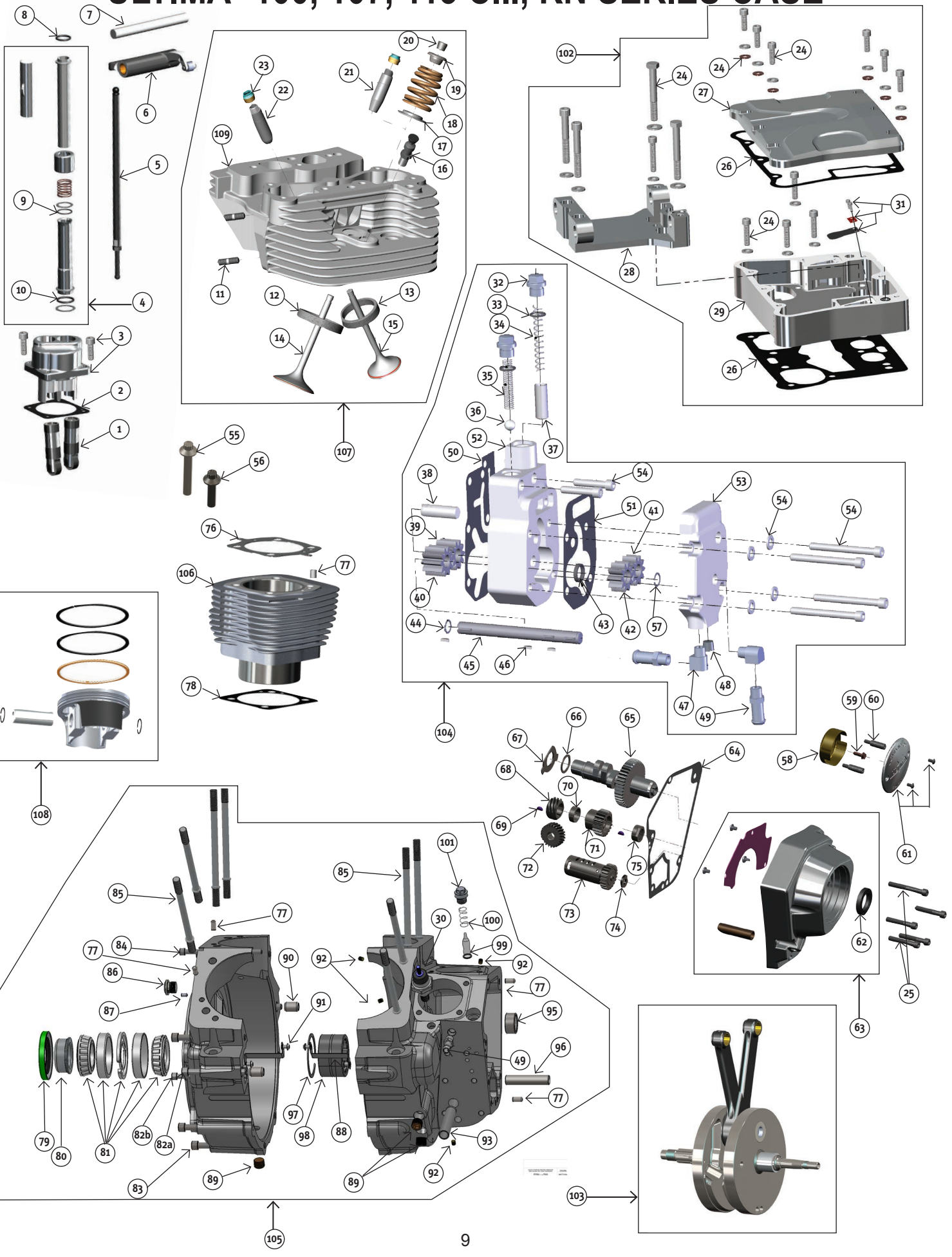

ULTIMA® 100, 107, 113 C.I., KN SERIES CASE

#	PART#	DESCRIPTION	OEM#	QTY
1	91-880	Ultima® lifter	18523-86	Sold each
2	77-712	Rear Tappet block gasket		Sold each
	77-713	Front Tappet block gasket		Sold each
3	91-697	Tappet blocks big bore motors, w/hardware		Sold as set
4	91-980	Pushrod cover assembly		Sold each
5	91-797	Pushrod set adjustable + .200"		Sold as set
6	91-699	Rocker arm set, 1.675 ratio		Sold as set
7	91-666	Rocker arm shaft	17611-83	Sold each
8	78-675	Pushrod O-ring upper	11157	Sold each
9	78-673	Pushrod O-ring middle	11132	Sold each
10	78-674	Pushrod O-ring bottom	11145	Sold each
11	66-242	Exhaust stud	16715-83	Sold each
12	91-569A	2.250"x1.815" Intake valve seat (2.100)		Sold each
13	91-568A	1.880"x1.495" Exhaust valve seat (1.700)		Sold each
14	91-747	Intake valve 2.100"x4.580"		Sold each
15	91-748	Exhaust valve 1.700"x4.620"		Sold each
16	93-772	compression release		Sold each
17	91-337	Conical spring seat		Sold each
18	91-861	Conical valve spring std.		Sold each
19	91-338	Conical spring retainer, steel		Sold each
20	91-339	Ultima® keeper/lock, conical spring, 7 degree		Sold each
21 *	91-780	Valve guide int. std.		Sold each
	91-782	Valve guide int. +.001"		Sold each
	91-784	Valve guide int. +.002"		Sold each
22 *	91-781	Valve guide exh. std.		Sold each
	91-783	Valve guide exh. +.001"		Sold each
	91-785	Valve guide exh. +.002"		Sold each
23	91-770	Valve seal for BT, XL & TC		Sold each
24	89-519	Rkr box hardware kit (2 rocker boxes)		Sold as kit
25	40-614	Cam cover bolt kit		Sold as kit
26	77-109	Rkr box gasket kit (2 rocker boxes), 06'-11', no hole		Sold as kit
	77-111	Rkr box gasket kit (2 rocker boxes), 12'-LTR, cntr hole		Sold as kit
27	89-541	Rkr box cover, 06'-11', no hole		Sold each
	89-544	Rkr box cover, 12'-LTR, cntr hole		Sold each
28	89-545	Rkr box center section, 06'-LTR		Sold each
29	89-540	Rkr box base, 06'-11'		Sold each
	89-543	Rkr box base, 12'-LTR, w/hole		Sold each
30	17-65	Oil pressure switch	26561-84	Sold each
31	89-518	Rkr box reed valve kit (1 rocker box)		Sold as kit
32	41-888	Spring cap	26263-80	Sold as kit
33	95-828	O-ring 84-99	11105	Sold pkg. 5
34	98-619	Plunger spring	26207-83	Sold each
35	98-620	Check ball spring	26262-80	Sold each
36	98-617	Check ball	8873	Sold each
37	98-623	Plunger	26400-82	Sold each
38	98-618	Idler pin	26327-68	Sold each
39	98-605	Gear, return idle 10T		Sold each
40	98-604	Gear, return drive 10T		Sold each
41	98-607	Gear, feed idle 10T		Sold each
42	98-606	Gear, feed drive 10T		Sold each
43	95-753	Oil seal	26227-58	Sold pkg. 5
44	98-329	Clip ring	11002	Sold each
45	98-334	Drive shaft	26346-70	Sold each
46	98-272	Woodruff key	26348-15	Sold each
47	21-185	Spigot elbow		Sold each
48	98-622	Pressure plug	45830-48	Sold each
49	21-123	Spigot tube	63533-41	Sold each
50	98-625	Base gasket 92 & ltr		Sold each
51	98-627	Cover gasket 92 & Ltr		Sold each
52	98-602	Pump base H.O. 92 & ltr pol.		Sold each
53	98-603	Pump cover H.O. 92 & ltr pol.		Sold each
54	41-740	Oil pump hardware kit		Sold each
55	40-616	Head bolt long	16478-85	Sold each
56	40-617	Head bolt short	16480-92	Sold each
57	98-325	Snap ring	26348-36	Sold each
58	53-528	Ignition rotor (gold)	32402-83	Sold each
59	53-529	Ignition rotor screw	2611C	Sold each
60	91-352	Ignition timing screws	32606-82	Sold each
61	89-114	Ignition cover, Ultima w/screws		Sold each
62	95-222	Oil seal	83162-51	Sold each
63	88-53	Cam cover	25268-84A	Sold each
64	77-715	Gasket, cam cover	25225-70B	Sold each
65	114-68	Cam for 100" Ultima® motor		Sold each
	114-246	Cam for 107" Ultima® motor		Sold each
	114-245	Cam for 113" Ultima® motor		Sold each
66 *	98-378	Cam shim .070"	25554-36	Sold each
	98-375	Cam shim .055"	25551-36	Sold each
	98-376	Cam shim .060"	25552-36	Sold each
	98-377	Cam shim .065"	25553-36	Sold each
	98-379	Cam shim .075"	25555-36	Sold each
	98-380	Cam shim .080"	25556-36	Sold each
67	98-372	Washer, cam thrust	25550-57	Sold each
68	98-359	Gear, oil pump drive	26349-73	Sold each
69	98-305	Woodruff key	23985-54	Sold each
70	98-89	Pinion gear spacer	24703-54B	Sold each
71 *	98-588	Gear, pinion Red	24043-78	Sold each
	98-585	Gear, pinion Orange	24040-78	Sold each
	98-586	Gear, pinion White	24041-78	Sold each
	98-587	Gear, pinion Yellow	24042-78	Sold each
	98-589	Gear, pinion Blue	24044-78	Sold each
	98-590	Gear, pinion Green	24045-78	Sold each
	98-591	Gear, pinion Black	24046-78	Sold each
72	98-358	Gear, oil pump driven	26345-73	Sold each
73 *	98-512	Breather gear std.	25313-77	Sold each
	98-812	Breather gear +.030" 77 & ltr	25313-77	Sold each
74 *	98-80	Breather gear shim .110" 79 & ltr	25313-77A	Sold each
	98-81	Breather gear shim .115" 79 & ltr	25321-79	Sold each
	98-82	Breather gear shim .120" 79 & ltr	25322-79	Sold each
	98-83	Breather gear shim .125" 79 & ltr	25323-79	Sold each
75	98-302	Nut, pinion	24023-54	Sold each
76	78-678	Head gasket, front or rear		Sold each
77	98-540	Dowel pin .250"x.500"		Sold each
78	78-710	Base gasket front		Sold each
	78-711	Base gasket rear		Sold each
79	95-805	Oil seal	12026	Sold each
80	98-360	Spacer, sprocket shaft 71-99 BT	24002-700	Sold each
81	95-320	Bearing & race set	9028	Sold as set
82a	300-533	Case bolt 5/16-18 x 2-3/4		Sold each
82b	300-125	Case bolt 1/4-20 x 3-1/4		Sold each
83	300-534	Case bolt 5/16-18 x 3-1/2		Sold each
84	300-535	Case bolt 1/4-20 x 4.0		Sold each
85	98-547	6.125 Cylinder stud		Sold each
86	98-490A	Timing plug		Sold each
87	98-545	Set screw 10-24		Sold each
88	300-127	Adjustable scraper blade		Sold each
89	98-544	1/4 pipe plug for case		Sold each
90	300-541	Alignment pin .500" x.500" hollow		Sold each
91	300-407E	Scraper bolt #10-24x1/4" BHCS		Sold each
92	98-543	3/16 Hi pressure plug		Sold each
93	300-453	Bushing, oil pump 36 & ltr		Sold each
94	------	----------		Sold each
95	95-173	Cam bearing	9058	Sold each
96	98-542	Breather seperator tube		Sold each
97	98-514	Case pinion bearing retaining ring		Sold each
98	95-812	Needle bearing 1-5/8" shaft 1-1/4" width		Sold each
99	98-510	Screen, crankcase	24981-70	Sold each
100	98-511	Spring, crankcase 70-99 BT	24982-70	Sold each
101	98-538	Screen plug		Sold each
102	89-516	Rocker box set, 06'-11' (2 rocker boxes)		Sold as set
	89-538	Rocker box set, 12'-LTR (2 rocker boxes)		Sold as set
103	98-509	Crank assembly 4.250" Stroke 100/107" Complete		Sold each
	98-632	Crank assembly 4.500" Stroke 113" Complete		Sold each
104	98-517	Oil pump complete H.O. 92 & ltr polished		Sold each
	98-520	Oil pump complete H.O. 92 & ltr black		Sold each
105	206-81	Motor case 92 & ltr 4.000" bore. black		Sold each
	206-82	Motor case 92 & ltr 4.000" bore. Polished		Sold each
106	93-864	100" Front cylinder black 3.875" bore		Sold each
	93-865	100" Rear cylinder black 3.875" bore		Sold each
	93-60	100" Front cylinder polished 3.875" bore		Sold each
	93-61	100" Rear cylinder polished 3.875" bore		Sold each
	93-862	107/113" Front cylinder black 4.00" bore		Sold each
	93-863	107/113" Rear cylinder black 4.00" bore		Sold each
	93-58	107/113" Front cylinder polished 4.00" bore		Sold each
	93-59	107/113" Rear cylinder polished 4.00" bore		Sold each
107	93-892	Front cylinder head 4.00" black assembled		Sold each
	93-893	Rear cylinder head 4.00" black assembled		Sold each
	93-90	Front cylinder head 4.00" polished assembled		Sold each
	93-91	Rear cylinder head 4.00" polished assembled		Sold each
108 *	93-185	Piston set w/rings,clips,pins 100" 3.875" std		Sold as set
	93-186	Piston set w/rings,clips,pins 100" 3.880" +.005"		Sold as set
	93-187	Piston set w/rings,clips,pins 100" 3.885" +.010"		Sold as set
	93-188	Piston set w/rings,clips,pins 100" 3.895" +.020"		Sold as set
	93-189	Piston set w/rings,clips,pins 100" 3.905" +.030"		Sold as set
*	93-180	Piston set w/rings,clips,pins 107" 4.00" std		Sold as set
	93-181	Piston set w/rings,clips,pins 107" 4.005" +.005"		Sold as set
	93-182	Piston set w/rings,clips,pins 107" 4.010" +.010"		Sold as set
	93-183	Piston set w/rings,clips,pins 107" 4.020" +.020"		Sold as set
	93-184	Piston set w/rings,clips,pins 107" 4.030" +.030"		Sold as set
	93-175	Piston set w/rings,clips,pins 113" 4.00" std		Sold as set
	93-176	Piston set w/rings,clips,pins 113" 4.005" +.005"		Sold as set
	93-177	Piston set w/rings,clips,pins 113" 4.010" +.010"		Sold as set
	93-178	Piston set w/rings,clips,pins 113" 4.020" +.020"		Sold as set
	93-179	Piston set w/rings,clips,pins 113" 4.030" +.030"		Sold as set
109	93-892M	Ft cyl head 4.000" black bare w/guides & seats		Sold each
	93-893M	Rr cyl head 4.000" black bare w/guides & seats		Sold each
	93-890P	Ft cyl head 4.000" polished bare w/guides & seats		Sold each
	93-891P	Rr cyl head 4.000" polished bare w/guides & seats		Sold each

Every attempt has been made to insure proper fitment of our parts for the applications listed in this guide. It is the end users responsibility to exercise good judgement in the part selection, installation & maintenance of their motor when installing parts referred to in this reference guide. Midwest MC Supply has no control over the judgement of others & assumes no responsibility or liability of any nature for the failure of others to use good judgement.

*** DENOTES STANDARD PRODUCTION PART USED WHEN OPTIONS ARE AVAILABLE**

ULTIMA® 120 & 127 C.I., EG SERIES CASE

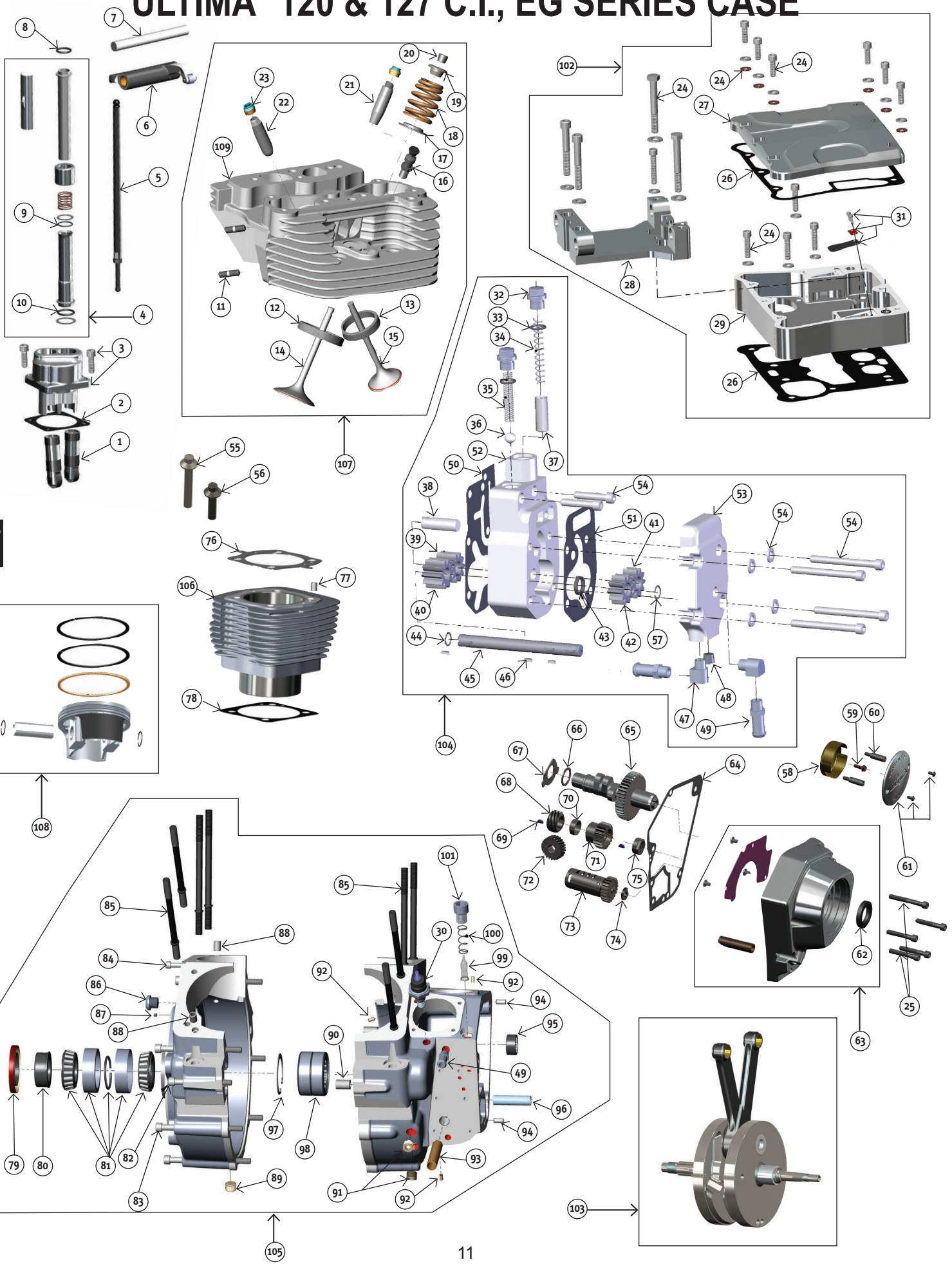

ULTIMA® 120 & 127 C.I., EG SERIES CASE

#	PART#	DESCRIPTION	OEM#	QTY
1	91-880	Ultima® lifter	18523-86	Sold each
2	77-712	Rear Tappet block gasket		Sold each
	77-713	Front Tappet block gasket		Sold each
3	91-697	Tappet blocks big bore motors, w/hardware		Sold as set
4	91-980	Pushrod cover assembly		Sold each
5	91-797	Pushrod set adjustable + .200"		Sold as set
6	91-699	Rocker arm set, 1.675 ratio		Sold as set
7	91-666	Rocker arm shaft	17611-83	Sold each
8	78-675	Pushrod O-ring upper	11157	Sold each
9	78-673	Pushrod O-ring middle	11132	Sold each
10	78-674	Pushrod O-ring bottom	11145	Sold each
11	66-242	Exhaust stud	16715-83	Sold each
12	91-569A	2.250"x1.815" Intake valve seat (2.100)		Sold each
13	91-568A	1.880"x1.495" Exhaust valve seat (1.700)		Sold each
14	91-747	Intake valve 2.100"x4.580"		Sold each
15	91-748	Exhaust valve 1.700"x4.620"		Sold each
16	93-772	compression release		Sold each
17	91-337	Conical spring seat		Sold each
18	91-861	Conical valve spring std.		Sold each
19	91-338	Conical spring retainer, steel		Sold each
20	91-339	Ultima® keeper/lock, conical spring, 7 degree		Sold each
21 *	91-780	Valve guide int. std.		Sold each
	91-782	Valve guide int. +.001"		Sold each
	91-784	Valve guide int. +.002"		Sold each
22 *	91-781	Valve guide exh. std.		Sold each
	91-783	Valve guide exh. +.001"		Sold each
	91-785	Valve guide exh. +.002"		Sold each
23	91-770	Valve seal for BT, XL & TC		Sold each
24	89-519	Rkr box hardware kit (2 rocker boxes)		Sold as kit
25	40-614	Cam cover bolt kit		Sold as kit
26	77-109	Rkr box gasket kit (2 rocker boxes), 06'-11', no hole		Sold as kit
	77-111	Rkr box gasket kit (2 rocker boxes), 12'-LTR, cntr hole		Sold as kit
27	89-541	Rkr box cover, 06'-11', no hole		Sold each
	89-544	Rkr box cover, 12'-LTR, cntr hole		Sold each
28	89-545	Rkr box center section, 06'-LTR		Sold each
29	89-540	Rkr box base, 06'-11'		Sold each
	89-543	Rkr box base, 12'-LTR, w/hole		Sold each
30	17-65	Oil pressure switch	26561-84	Sold each
31	89-518	Rkr box reed valve kit (1 rocker box)		Sold as kit
32	41-888	Spring cap	26263-80	Sold as kit
33	95-828	O-ring 84-99	11105	Sold pkg. 5
34	98-619	Plunger spring	26207-83	Sold each
35	98-620	Check ball spring	26262-80	Sold each
36	98-617	Check ball	8873	Sold each
37	98-623	Plunger	26400-82	Sold each
38	98-618	Idler pin	26327-68	Sold each
39	98-605	Gear, return idle 10T		Sold each
40	98-604	Gear, return drive 10T		Sold each
41	98-607	Gear, feed idle 10T		Sold each
42	98-606	Gear, feed drive 10T		Sold each
43	95-753	Oil seal	26227-58	Sold pkg. 5
44	98-329	Clip ring	11002	Sold each
45	98-334	Drive shaft	26346-70	Sold each
46	98-272	Woodruff key	26348-15	Sold each
47	21-185	Spigot elbow		Sold each
48	98-622	Pressure plug	45830-48	Sold each
49	21-123	Spigot tube	63533-41	Sold each
50	98-625	Base gasket 92 & ltr		Sold each
51	98-627	Cover gasket 92 & Ltr		Sold each
52	98-602	Pump base H.O. 92 & ltr pol.		Sold each
53	98-603	Pump cover H.O. 92 & ltr pol.		Sold each
54	41-740	Oil pump hardware kit		Sold each
55	40-616	Head bolt long	16478-85	Sold each
56	40-617	Head bolt short	16480-92	Sold each
57	98-325	Snap ring	26348-36	Sold each
58	53-528	Ignition rotor (gold)	32402-83	Sold each
59	53-529	Ignition rotor screw	2611C	Sold each
60	91-352	Ignition timing screws	32606-82	Sold each
61	89-114	Ignition cover, Ultima w/screws		Sold each
62	95-222	Oil seal	83162-51	Sold each
63	88-53	Cam cover	25268-84A	Sold each
64	77-715	Gasket, cam cover	25225-70B	Sold each
65	114-245	Cam for 120" & 127" Ultima® motor MW264		Sold each
66 *	98-378	Cam shim .070"	25554-36	Sold each
	98-375	Cam shim .055"	25551-36	Sold each
	98-376	Cam shim .060"	25552-36	Sold each
	98-377	Cam shim .065"	25553-36	Sold each
	98-379	Cam shim .075"	25555-36	Sold each
	98-380	Cam shim .080"	25556-36	Sold each
67	98-372	Washer, cam thrust	25550-57	Sold each
68	98-359	Gear, oil pump drive	26349-73	Sold each
69	98-305	Woodruff key	23985-54	Sold each
70	98-89	Pinion gear spacer	24703-54B	Sold each
71 *	98-588	Gear, pinion Red	24043-78	Sold each
	98-585	Gear, pinion Orange	24040-78	Sold each
	98-586	Gear, pinion White	24041-78	Sold each
	98-587	Gear, pinion Yellow	24042-78	Sold each
	98-589	Gear, pinion Blue	24044-78	Sold each
	98-590	Gear, pinion Green	24045-78	Sold each
	98-591	Gear, pinion Black	24046-78	Sold each
72	98-358	Gear, oil pump driven	26345-73	Sold each
73 *	98-512	Breather gear std.	25313-77	Sold each
	98-812	Breather gear +.030" 77 & ltr	25313-77	Sold each
74 *	98-80	Breather gear shim .110" 79 & ltr	25313-77A	Sold each
	98-81	Breather gear shim .115" 79 & ltr	25321-79	Sold each
	98-82	Breather gear shim .120" 79 & ltr	25322-79	Sold each
	98-83	Breather gear shim .125" 79 & ltr	25323-79	Sold each
75	98-302	Nut, pinion	24023-54	Sold each
76	78-686	Head gasket, front or rear, .035		Sold each
77	98-577A	Dowel pin .375"x.500"		Sold each
78	78-712	Base gasket front		Sold each
	78-713	Base gasket rear		Sold each
79	95-805	Oil seal	12026	Sold each
80	98-360	Spacer, sprocket shaft 71-99 BT	24002-700	Sold each
81	95-320	Bearing & race set	9028	Sold as set
82	300-533	Case bolt 5/16-18 x 2-3/4		Sold each
83	300-534	Case bolt 5/16-18 x 3-1/2		Sold each
84	300-535	Case bolt 1/4-20 x 4.0		Sold each
85	98-547	6.125 Cylinder stud		Sold each
86	98-490A	Timing plug		Sold each
87	98-545	Set screw 10-24		Sold each
88	98-577A	Dowel pin .375"x.500"		Sold each
89	98-544	1/4 pipe plug for case		Sold each
90	300-541	Alignment pin .500" x.500"		Sold each
91	98-544	1/4 pipe plug for case		Sold each
92	98-543	3/16 Hi pressure plug		Sold each
93	300-453	Bushing, oil pump 36 & ltr		Sold each
94	98-540	Dowel pin .250"x.500"		Sold each
95	95-173	Cam bearing	9058	Sold each
96	98-542	Breather seperator tube		Sold each
97	98-581	Case pinion bearing retaining ring		Sold each
98	95-809	Needle bearing 1.5" shaft 1.25" width	24626-87	Sold each
99	98-510	Screen, crankcase	24981-70	Sold each
100	98-511	Spring, crankcase 70-99 BT	24982-70	Sold each
101	98-538	Screen plug		Sold each
102	89-516	Rocker box set, 06'-11' (2 rocker boxes)		Sold as set
	89-538	Rocker box set, 12'-LTR (2 rocker boxes)		Sold as set
103	98-555	Crank assembly 4.250" Stroke 120" Complete		Sold each
	98-556	Crank assembly 4.500" Stroke 127" Complete		Sold each
104	98-517	Oil pump complete H.O. 92 & ltr polished		Sold each
	98-520	Oil pump complete H.O. 92 & ltr black		Sold each
105	206-48	Motor case 92 & ltr 4.250" bore. natural		Sold each
	206-49	Motor case 92 & ltr 4.250" bore. black		Sold each
	206-78	Motor case 92 & ltr 4.250" bore. Polished		Sold each
106	93-934	120" & 127" Front cylinder natural 4.250" bore		Sold each
	93-935	120" & 127" Rear cylinder natural 4.250" bore		Sold each
	93-936	120" & 127" Front cylinder black 4.250" bore		Sold each
	93-937	120" & 127" Rear cylinder black 4.250" bore		Sold each
	93-34	120" & 127" Front cylinder polished 4.250" bore		Sold each
	93-35	120" & 127" Rear cylinder polished 4.250" bore		Sold each
107	93-930	Front cylinder head 4.250" natural assembled		Sold each
	93-931	Rear cylinder head 4.250" natural assembled		Sold each
	93-932	Front cylinder head 4.250" black assembled		Sold each
	93-933	Rear cylinder head 4.250" black assembled		Sold each
	93-30	Front cylinder head 4.250 polished assembled		Sold each
	93-31	Rear cylinder head 4.250" polished assembled		Sold each
108 *	93-970	Piston set w/rings,clips,pins 120" 4.250" std		Sold as set
	93-971	Piston set w/rings,clips,pins 120" 4.250" +.005"		Sold as set
	93-972	Piston set w/rings,clips,pins 120" 4.250" +.010"		Sold as set
	93-973	Piston set w/rings,clips,pins 120" 4.250" +.020"		Sold as set
	93-974	Piston set w/rings,clips,pins 120" 4.250" +.030"		Sold as set
*	93-975	Piston set w/rings,clips,pins 127" 4.250" std		Sold as set
	93-976	Piston set w/rings,clips,pins 127" 4.250" +.005"		Sold as set
	93-977	Piston set w/rings,clips,pins 127" 4.250" +.010"		Sold as set
	93-978	Piston set w/rings,clips,pins 127" 4.250" +.020"		Sold as set
	93-979	Piston set w/rings,clips,pins 127" 4.250" +.030"		Sold as set
109	93-930M	Ft cyl head 4.250" natural bare w/guides & seats		Sold each
	93-931M	Rr cyl head 4.250" natural bare w/guides & seats		Sold each
	93-932M	Ft cyl head 4.250" black bare w/guides & seats		Sold each
	93-933M	Rr cyl head 4.250" black bare w/guides & seats		Sold each
	93-930P	Ft cyl head 4.250" polished bare w/guides & seats		Sold each
	93-931P	Rr cyl head 4.250" polished bare w/guides & seats		Sold each

Every attempt has been made to insure proper fitment of our parts for the applications listed in this guide. It is the end users responsibility to exercise good judgement in the part selection, installation & maintenance of their motor when installing parts referred to in this reference guide. Midwest MC Supply has no control over the judgement of others & assumes no responsibility or liability of any nature for the failure of others to use good judgement.

* DENOTES STANDARD PRODUCTION PART USED WHEN OPTIONS ARE AVAILABLE

ULTIMA® 140 C.I., HK SERIES CASE

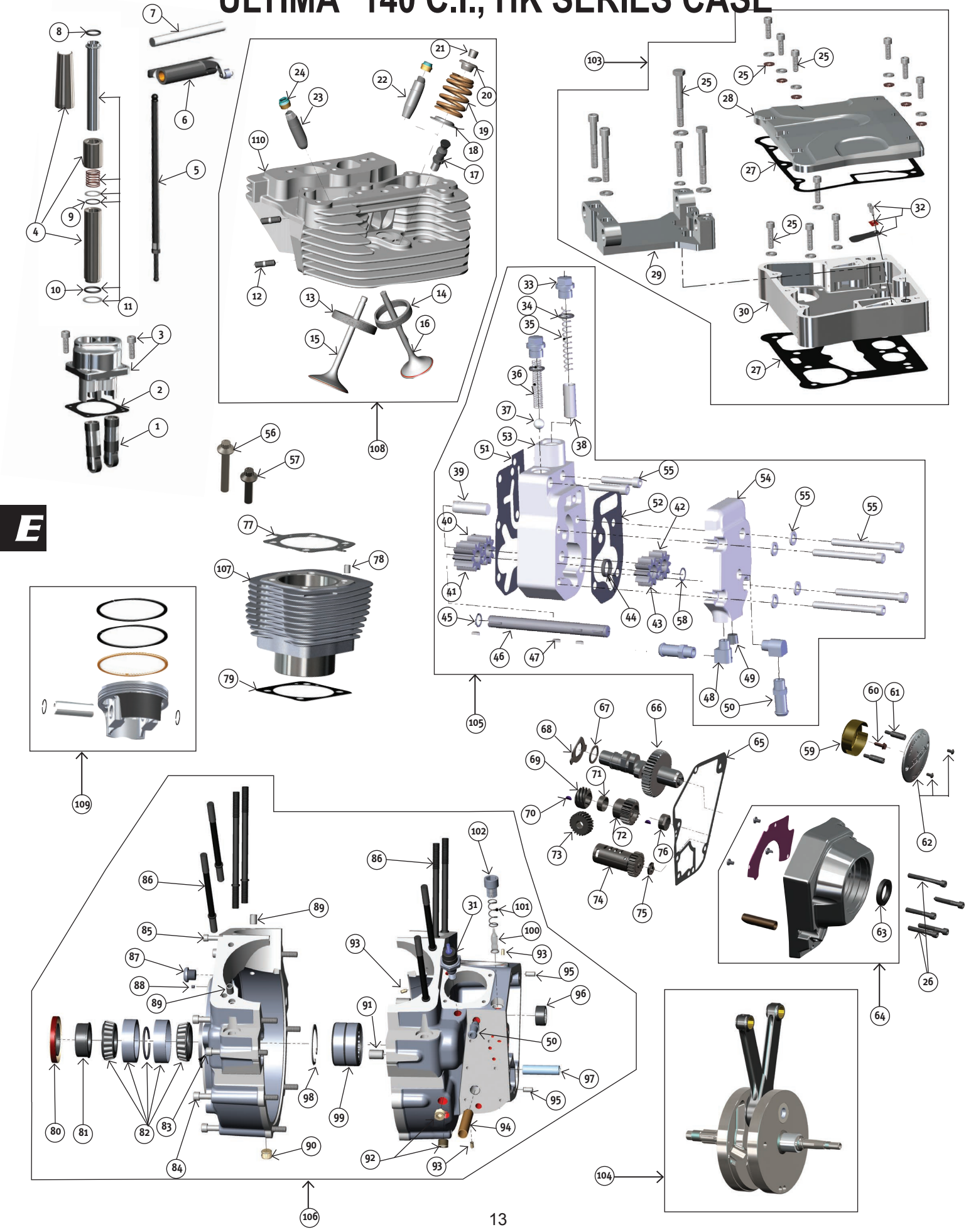

ULTIMA® 140 C.I., HK SERIES CASE

#	PART#	DESCRIPTION	OEM#	QTY
1	91-880	Ultima® lifter	18523-86	Sold each
2	77-712	Rear Tappet block gasket		Sold each
	77-713	Front Tappet block gasket		Sold each
3	91-697	Tappet blocks big bore motors, w/hardware		Sold as set
4	91-776	Pushrod cover assembly set +.500" (1 motor)		Sold as set
5	91-799	Pushrod set adjustable, + .500"		Sold as set
6	91-699	Rocker arm set, 1.675 ratio		Sold as set
7	91-666	Rocker arm shaft	17611-83	Sold each
8	78-675	Pushrod O-ring upper	11157	Sold each
9	78-673	Pushrod O-ring middle	11132	Sold each
10	78-674	Pushrod O-ring bottom	11145	Sold each
11	89-115	Pushrod cover hardware kit (1motor)		sold as kit
12	66-242	Exhaust stud	16715-83	Sold each
13	91-570A	2.450"x2.075" Intake valve seat (2.250 & 2.300)		Sold each
14	91-571A	1.980"x1.570" Exhaust valve seat (1.800)		Sold each
15	91-766	Intake valve 2.300" x 4.600"		Sold each
16	91-767	Exhaust valve 1.800"x4.550"		Sold each
17	93-772	Compression release		Sold each
18	91-337	Conical spring seat		Sold each
19	91-862	Conical valve spring, high performance		Sold each
20	91-340	Conical retainer, titanium		Sold each
21	91-339	Ultima® conical keeper/lock, 7 degree		Sold each
22	91-780	Valve guide int. std.		Sold each
	91-782	Valve guide int. +.001"		Sold each
	91-784	Valve guide int. +.002"		Sold each
23 *	91-781	Valve guide exh. std.		Sold each
	91-783	Valve guide exh. +.001"		Sold each
	91-785	Valve guide exh. +.002"		Sold each
24	91-770	Valve seal for BT, XL & TC		Sold each
25	89-519	Rkr box hardware kit (2 rocker boxes)		Sold as kit
26	40-614	Cam cover bolt kit		Sold as kit
27	77-109	Rkr box gasket kit, 06'-11' (2 rocker boxes)		Sold as kit
28	89-541	Rkr box cover, 06'-11', no hole		Sold each
	89-544	Rkr box cover, 12'-LTR, w/hole		Sold each
29	89-545	Rkr box center section, 06'-LTR		Sold each
30	89-540	Rkr box base, 06'-11'		Sold each
	89-543	Rkr box base, 12'-LTR		Sold each
31	17-65	Oil pressure switch	26561-84	Sold each
32	89-518	Rkr box reed valve kit (1 rocker box)		Sold as kit
33	41-888	Spring cap	26263-80	Sold as kit
34	95-828	O-ring 84-99	11105	Sold pkg. 5
35	98-619	Plunger spring	26207-83	Sold each
36	98-620	Check ball spring	26262-80	Sold each
37	98-617	Check ball	8873	Sold each
38	98-623	Plunger	26400-82	Sold each
39	98-618	Idler pin	26327-68	Sold each
40	98-605	Gear, return idle 10T		Sold each
41	98-604	Gear, return drive 10T		Sold each
42	98-607	Gear, feed idle 10T		Sold each
43	98-606	Gear, feed drive 10T		Sold each
44	95-753	Oil seal	26227-58	Sold pkg. 5
45	98-329	Clip ring	11002	Sold each
46	98-334	Drive shaft	26346-70	Sold each
47	98-272	Woodruff key	26348-15	Sold each
48	21-185	Spigot elbow		Sold each
49	98-622	Pressure plug	45830-48	Sold each
50	21-123	Spigot tube	63533-41	Sold each
51	98-625	Base gasket 92 & ltr		Sold each
52	98-627	Cover gasket 92 & Ltr		Sold each
53	98-602	Pump base H.O. 92 & ltr pol.		Sold each
54	98-603	Pump cover H.O. 92 & ltr pol.		Sold each
55	41-740	Oil pump hardware kit		Sold each
56	40-616	Head bolt long	16478-85	Sold each
57	40-617	Head bolt short	16480-92	Sold each
58	98-325	Snap ring	26348-36	Sold each
59	53-528	Ignition rotor (gold)	32402-83	Sold each
60	53-529	Ignition rotor screw	2611C	Sold each
61	91-352	Ignition timing screws	32606-82	Sold each
62	89-114	Ignition cover, Ultima® w/screws		Sold each
63	95-222	Oil seal	83162-51	Sold each
64	88-53	Cam cover	25268-84A	Sold each
65	77-715	Gasket, cam cover	25225-70B	Sold each
66	114-81	Cam for 140" Ultima® motor MW268		Sold each
67	98-378	Cam shim .070"	25554-36	Sold each
	98-375	Cam shim .055"	25551-36	Sold each
	98-376	Cam shim .060"	25552-36	Sold each
	98-377	Cam shim .065"	25553-36	Sold each
	98-379	Cam shim .075"	25555-36	Sold each
	98-380	Cam shim .080"	25556-36	Sold each
68	98-372	Washer, cam thrust	25550-57	Sold each
69	98-359	Gear, oil pump drive	26349-73	Sold each
70	98-305	Woodruff key	23985-54	Sold each
71	98-89	Pinion gear spacer	24703-54B	Sold each

#	PART#	DESCRIPTION	OEM#	QTY
72 *	98-588	Gear, pinion Red	24043-78	Sold each
	98-585	Gear, pinion Orange	24040-78	Sold each
	98-586	Gear, pinion White	24041-78	Sold each
	98-587	Gear, pinion Yellow	24042-78	Sold each
	98-589	Gear, pinion Blue	24044-78	Sold each
	98-590	Gear, pinion Green	24045-78	Sold each
	98-591	Gear, pinion Black	24046-78	Sold each
73	98-358	Gear, oil pump driven	26345-73	Sold each
74 *	98-512	Breather gear std.	25313-77	Sold each
	98-812	Breather gear +.030" 77 & ltr	25313-77	Sold each
75 *	98-80	Breather gear shim .110" 79 & ltr	25313-77A	Sold each
	98-81	Breather gear shim .115" 79 & ltr	25321-79	Sold each
	98-82	Breather gear shim .120" 79 & ltr	25322-79	Sold each
	98-83	Breather gear shim .125" 79 & ltr	25323-79	Sold each
76	98-302	Nut, pinion	24023-54	Sold each
77	78-683	Head gasket front or rear		Sold each
78	98-577A	Dowel pin .375"x.500"		Sold each
79	78-681	Base gasket front		Sold each
	78-682	Base gasket rear		Sold each
80	95-805	Oil seal	12026	Sold each
81	98-360	Spacer, sprocket shaft 71-99 BT	24002-700	Sold each
82	95-320	Bearing & race set	9028	Sold as set
83	300-533	Case bolt 5/16-18 x 2-3/4		Sold each
84	300-534	Case bolt 5/16-18 x 3-1/2		Sold each
85	300-535	Case bolt 1/4-20 x 4.0		Sold each
86	98-547	6.125 Cylinder stud		Sold each
87	98-490A	Timing plug		Sold each
88	98-545	Set screw 10-24		Sold each
89	98-577A	Dowel pin .375"x.500"		Sold each
90	98-544	1/4 pipe plug for case		Sold each
91	300-541	Alignment pin .500" x.500"		Sold each
92	98-544	1/4 pipe plug for case		Sold each
93	98-543	3/16 Hi pressure plug		Sold each
94	300-453	Bushing, oil pump 36 & ltr		Sold each
95	98-540	Dowel pin .250"x.500"		Sold each
96	95-173	Cam bearing	9058	Sold each
97	98-542	Breather seperator tube		Sold each
98	98-581	Case pinion bearing retaining ring		Sold each
99	95-809	Needle bearing 1.5" shaft 1.25" width	24626-87	Sold each
100	98-510	Screen, crankcase	24981-70	Sold each
101	98-511	Spring, crankcase 70-99 BT	24982-70	Sold each
102	98-538	Screen plug		Sold each
103	89-516	Rocker box set, 06'-11' (2 rocker boxes)		Sold as set
	89-538	Rocker box set, 12'-LTR (2 rocker boxes)		Sold as set
104	98-557	Crank assembly 4.625" Stroke 140" Complete		Sold each
105	98-517	Oil pump complete H.O. 92 & ltr polished		Sold each
	98-520	Oil pump complete H.O. 92 & ltr black		Sold each
106	206-44	Motor case 92 & ltr 4.400" bore. natural		Sold each
	206-45	Motor case 92 & ltr 4.400" bore. black		Sold each
	206-74	Motor case 92 & ltr 4.400" bore. polished		Sold each
107	93-948	140" Front cylinder natural 4.400" bore		Sold each
	93-949	140" Rear cylinder natural 4.400" bore		Sold each
	93-950	140" Front cylinder black 4.400" bore		Sold each
	93-951	140" Rear cylinder black 4.400" bore		Sold each
	93-48	140" Front cylinder polished 4.400" bore		Sold each
	93-49	140" Rear cylinder polished 4.400" bore		Sold each
108	93-952	Front cylinder head 4.400" natural assembled		Sold each
	93-953	Rear cylinder head 4.400" natural assembled		Sold each
	93-954	Front cylinder head 4.400" black assembled		Sold each
	93-955	Rear cylinder head 4.400" black assembled		Sold each
	93-52	Front cylinder head 4.400 polished assembled		Sold each
	93-53	Rear cylinder head 4.400" polished assembled		Sold each
109 *	93-985	Piston set w/rings,clips,pins 140" 4.400" std		Sold as set
	93-986	Piston set w/rings,clips,pins 140" 4.400" +.005"		Sold as set
	93-987	Piston set w/rings,clips,pins 140" 4.400" +.010"		Sold as set
	93-988	Piston set w/rings,clips,pins 140" 4.400" +.020"		Sold as set
	93-989	Piston set w/rings,clips,pins 140" 4.400" +.030"		Sold as set
110	93-952M	Frt cyl head 4.400" natural bare w/guides & seats		Sold each
	93-953M	Rr cyl head 4.400" natural bare w/guides & seats		Sold each
	93-954M	Frt cyl head 4.400" black bare w/guides & seats		Sold each
	93-955M	Rr cyl head 4.400" black bare w/guides & seats		Sold each
	93-52P	Frt cyl head 4.400" polished bare w/guides & seats		Sold each
	93-53P	Rr cyl head 4.400" polished bare w/guides & seats		Sold each

Every attempt has been made to insure proper fitment of our parts for the applications listed in this guide. It is the end users responsibility to exercise good judgement in the part selection, installation & maintenance of their motor when installing parts referred to in this reference guide. Midwest MC Supply has no control over the judgement of others & assumes no responsibility or liability of any nature for the failure of others to use good judgement.

*** DENOTES STANDARD PRODUCTION PART USED WHEN OPTIONS ARE AVAILABLE**

HARLEY DAVIDSON® 80 C.I.

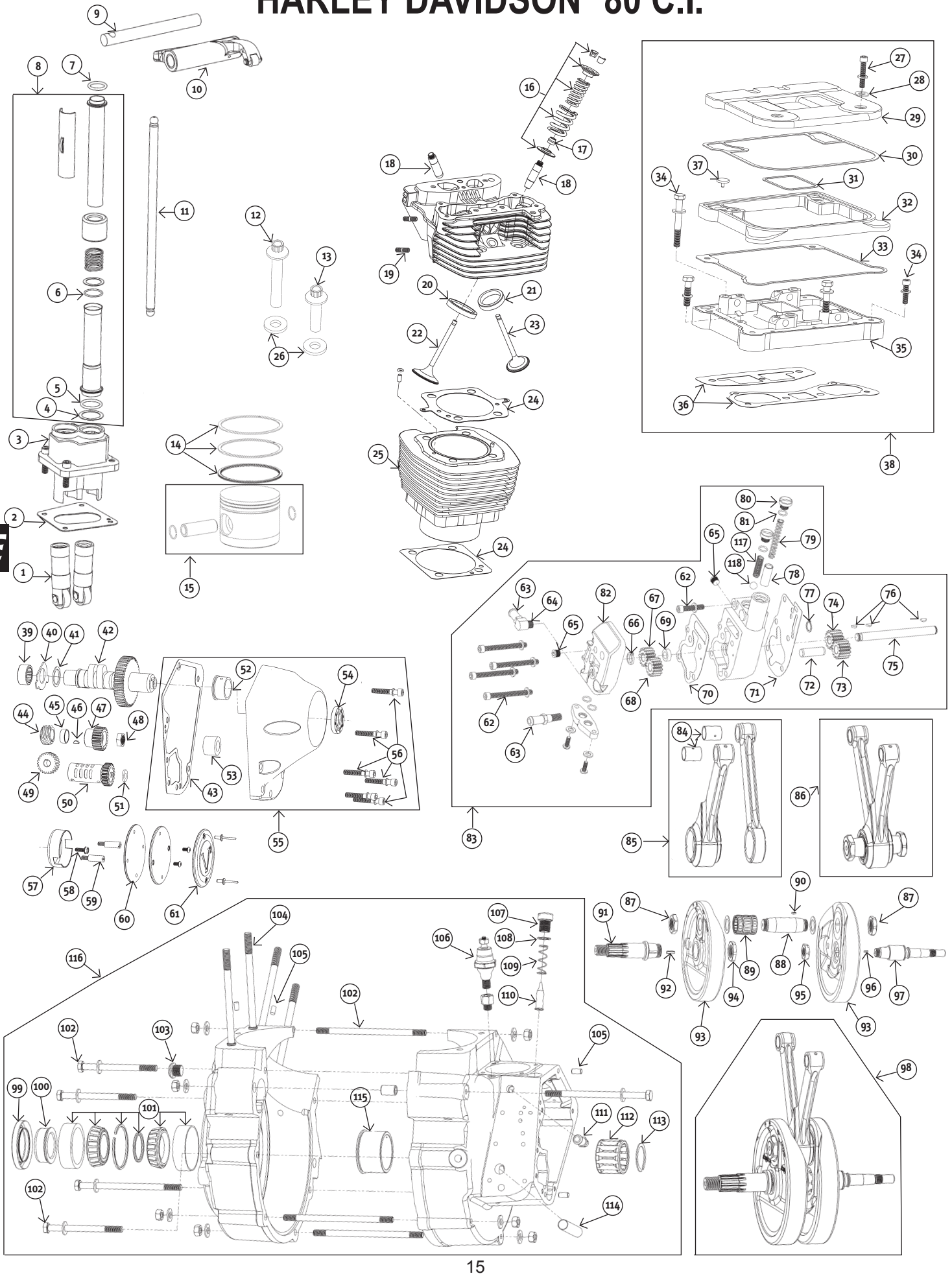

HARLEY DAVIDSON® 80 C.I.

#	PART#	DESCRIPTION	OEM#	QTY
1	91-880	Ultima® lifter	18523-86	each
2	78-374	Front tappet block gasket 84-99 Cometic	18634-48C	pkg 10
	78-373	Rear tappet block gasket 84-99 Cometic	18633-48D	pkg 10
3	91-613	Tappet block set, chrome w/hardware 84-99		set
	91-614	Tappet block set, black w/hardware 84-99		set
4	91-853	Lower pushrod washer	6737	each
5	78-674	Pushrod O-ring, bottom	11145	each
6	78-673	Pushrod O-ring, middle	11132	each
7	78-675	Pushrod O-ring, upper	11157	each
8	91-775	Pushrod cover assembly chrome		each
9	91-666	Rocker arm shaft	17611-83	each
10	91-699	Rocker arm set, 1.675 ratio		set
11	91-795	Pushrod set, adjustable, std. length		set
12	40-616	Head bolt, long	16478-85	each
13	40-617	Head bolt, short	16480-92	each
14	93-456	Piston rings. 80" std. bore		pair
	93-476	Piston rings. 80" +.005		pair
	93-457	Piston rings. 80" +.010		pair
	93-458	Piston rings. 80" +.020		pair
	93-459	Piston rings. 80" +.030		pair
15	93-794	Pistons, forged 80" std. bore w/pins & clips		set
	93-795	Pistons, forged 80" +.005" w/pins & clips		set
	93-796	Pistons, forged 80" +.010" w/pins & clips		set
	93-797	Pistons, forged 80" +.020" w/pins & clips		set
	93-798	Pistons, forged 80" +.030" w/pins & clips		set
16	91-543	Spring kit, Manley, stock to .650" lift.		kit
17	91-770	Valve seal for B.T. 84-99	18001-83B	each
18	91-388	Valve guide 84-99 int. or exh. Std.	18112-92	each
	91-389	Valve guide 84-99 int. or exh. +.001"	18130-83C	each
	91-390	Valve guide 84-99 int. or exh. +.002"	18131-83C	each
	91-391	Valve guide 84-99 int. or exh. +.003"	18133-83A	each
	91-392	Valve guide 84-99 int. or exh. +.004"		each
19	66-242	Exhaust stud	16715-83	each
20	91-680	Valve seat, intake (2.007" O.D. 1.625" I.D. .437" tall)		each
	91-682	Valve seat, intake (2.016" O.D. 1.625" I.D. .453" tall)		each
	91-681	Valve seat, intake (2.007" O.D. 1.625" I.D. .453" tall)		each
21	91-674	Valve seat, exhaust (1.7545" O.D. 1.375" I.D. .437" tall)		each
	91-676	Valve seat, exhaust (1.819" O.D. 1.625" I.D. .453" tall)		each
22	91-649	Intake valve head dia. 1.850" stock, stem dia. .310" stock.	18074-83	each
23	91-648	Exhaust valve head dia. 1.615" stock, stem dia. .3095" stock.	18082-3	each
24	78-246	Head & base gasket set, stock bore .030" Cometic		pair
	78-247	Head & base gasket set, stock bore .040" Cometic		pair
25	93-676	Cylinder, 80ci front or rear, 84-99 cast/natural finish	16510-83A	each
26	41-112	Head bolt washer kit 84-91	16482-85	kit
27	40-510	Stainless Rocker cover screw kit 84-99		kit
28	78-444	Fiber washer 84-99	63858-49	pkg 10
	78-548	Copper washer 84-99		pkg 10
29	89-351	Rocker cover 84-92 chrome	17528-84A	each
30	78-364	84-91 Upper rocker cover gasket, rubber Cometic	17356-84A	pkg 5
	78-365	92-99 Upper rocker cover gasket, rubber Cometic	17356-92	pkg 5
31	78-366	84-99 Inner rocker cover gasket, rubber Cometic	17358-84A	pkg 10
32	89-374	Rocker box middle spacer 84-92	17510-84	each
33	78-362	84-91 Lower rocker cover gasket, rubber Cometic	17355-84A	pkg 5
	78-363	92-99 Lower rocker cover gasket, rubber Cometic	17355-92	pkg 5
34	89-416	Rocker box bolt kit		kit
35	89-375	Bottom rocker carrier 84-92	17530-84B	each
36	78-321	2 piece gasket set with silicone bead 84-99		set
37	78-205	Umbrella valve 93-99	26856-89	each
38	89-373	84-92 Rkr box assy. Ft or Rr 3 piece OEM style w/gaskets		each
	89-450	93-99 Rkr box assy. Ft or Rr 3 piece OEM style w/gaskets/hdwre		each
	89-516	93-99 Rkr box assy.Ultima 2 piece solid top, Includes hdwre/gskts		set
	89-496	93-99 Rkr box assy.2 piece w/hole in center, Includes hdwre/gskts		set
39	95-173	Cam bearing	9058	each
40	98-372	Washer, cam thrust	25550-57	each
41	98-375	Cam shim .055" 84-99	25551-36	each
	98-376	Cam shim .060" 84-99	25552-36	each
	98-377	Cam shim .065" 84-99	25553-36	each
	98-378	Cam shim .070" 84-99	25554-36	each
	98-379	Cam shim .075" 84-99	25555-36	each
	98-380	Cam shim .080" 84-99	25556-36	each
42	114-46	Camshaft, bolt in, Andrews EV13 84-99		each
	114-52	Camshaft, bolt in, Andrews EV27 84-99		each
43	78-378	Gasket, cam cover 84-92 Cometic		pkg 5
	78-379	Gasket, cam cover 93-99 Cometic		pkg 5
44	98-359	Gear, oil pump drive 54-89	26349-73	each
45	98-89	Pinion gear spacer 54-89	24703-54B	each
46	98-305	Woodruff key 54-89	23985-54	each
	98-532	T-key, pinion gear 90-99	11219	pkg 10
47	98-585	Pinion gear 77-89 Orange	24040-78	each
	98-586	Pinion gear 77-89 White	24041-78	each
	98-587	Pinion gear 77-89 Yellow	24042-78	each
	98-588	Pinion gear 77-89 Red	24043-78	each
	98-589	Pinion gear 77-89 Blue	24044-78	each
	98-590	Pinion gear 77-89 Green	24045-78	each
	98-591	Pinion gear 77-89 Black	24046-78	each
48	98-302	Nut, pinion gear 54-89	24023-54	each
	98-458	Nut, pinion gear 90-92	24022-90	each
49	98-358	Gear, oil pump driven 73-95 24T	26345-73	each
50	98-512	Gear, breather std.	25313-77A	each
	98-812	Gear, breather +.030"	25313-77A	each
51	98-80	Shim, breather gear .110" 79-99	25313-77A	each
	98-81	Shim, breather gear .115" 79-99	25321-79	each
	98-82	Shim, breather gear .120" 79-99	25322-79	each
	98-83	Shim, breather gear .125" 79-99	25323-79	each
52	95-340	Bushing, cam	25581-70	each
53	95-341	Bushing, Pinion 73-92	25582-73	each
	95-454	Bushing, Pinion 93-99	25582-93	each
54	95-222	Oil seal	83162-51	each
55	88-53	Cam cover 73-92 w/hdwre & gasket chrome	25258-80B	each
	88-70	Cam cover 93-99 w/hdwre & gasket chrome	25266-93A	each
56	41-131	Chrome allen cam cover bolt kit 93-99		kit
57	53-528	Ignition rotor (gold) 84-99	32402-83	each
58	53-529	Ignition rotor screw	2611C	each
59	91-352	Ignition timing/sensor screw	32606-82	each
60	78-422	Point cover gasket 84-99	32591-80	pkg 10
61	89-304	Point cover domed, chrome 70-99	32524-83	each
	89-114	Point cover Ultima® domed, chrome 70-99 w/hdwre & gasket	32524-83	each
62	41-772	Oil pump bolt kit. Allen head 78-91		kit
	41-787	Oil pump bolt kit. Allen head 92-99		kit
63	21-123	Spigot tube 84-99	63533-41	each
64	21-185	Spigot elbow 84-99		each
65	98-622	Pressure plug 84-99	45830-48	each
66	98-325	Retaining ring 84-99	26348-36	each
67	98-615	Feed, drive gear 14T 84-99	26328-74	each
68	98-616	Feed, idler gear 14T 84-99	26326-62A	each
69	95-221	Oil seal 84-99	26227-58	each
70	78-397	Gasket, oil pump cover 84-91 paper Cometic	26276-80A	pkg
	78-398	Gasket, oil pump cover 92-99 paper Cometic	26276-92	pkg
71	78-395	Gasket, oil pump base 84-91 paper Cometic	26273-80B	pkg
	78-396	Gasket, oil pump base 92-99 paper Cometic	26273-92	pkg 10
72	98-618	Idler pin 84-99	26327-68	each
73	98-614	Return, idler gear 14T 84-99	26317-68A	each
74	98-613	Return, drive gear 14T 84-99	26315-68A	each
75	98-334	Drive shaft 84-99	26346-70	each
76	98-272	Woodruff key	26348-15	each
77	98-329	Retaining ring 84-99	11002	each
78	98-623	Plunger 84-99	26400-82	each
79	98-619	Plunger spring 84-99	26207-83	each
80	41-888	Oil pump cap	26263-80	each
81	95-828	O-ring 84-99	11105	each
82	89-238	Oil pump cover, 68-91 chrome		each
83	98-516	Oil pump, Ultima® 84-91 std. vol polished w/hdwre & gskts		each
	98-518	Oil pump, Ultima® 84-91 High output polished w/hdwre & gskts		each
	98-519	Oil pump, Ultima® 84-91 High output wrinkle blk w/hdwre & gskts		each
	98-515	Oil pump, Ultima® 92-99 std. vol. polished w/hdwre & gskts		each
	98-517	Oil pump, Ultima® 92-99 High output polished w/hdwre & gskts		each
	98-520	Oil pump, Ultima® 92-99 High output wrinkle blk w/hdwre & gskts		each
84	95-115	Wristpin bushing, std. size	24334-36	each
	95-389	Wristpin bushing, +.002"		each
85	98-573	Con. Rods 7.440" Unfinished .7918" small end 1.6256" big end		set
86	98-571	Rod set w/crank pin, nuts, bearings, bearing cages, .792" pin bore		set
87	98-422	Crankpin nut 3/4-20	24016-80	each
88	98-537	Crankpin 1.250" w/nuts & key 81-99		kit
89	95-259	Rod roller bearing set 74 & ltr		kit
90	98-475	Crankpin key	23985-18	kit
91	98-339	Sprocket shaft 81 & ltr		each
92	94-137	Woodruff key	11218	each
93	98-650	Flywheels machined, unbalanced 4.250 stroke 5 piece		pair
94	98-539	Sprocket shaft nut 1-1/8-16	24017-80	each
95	98-422	Pinion shaft nut	24016-80	each
96	98-475	Woodruff key	11218	each
97	98-546	Pinion shaft 81-99 long nose		each
98	98-552	Crank assembly 4.250 stroke 84-99		assy.
99	95-805	Oil seal	12026	each
100	98-360	Sprocket shaft spacer 71-99	24002-70	each
101	95-320	Bearing & race set	9028	set
102	41-882	Motor case bolt/stud kit 79-95 chrome		kit
	41-142	Motor case bolt/stud kit 96-99 chrome		kit
103	98-490	Allen timing plug 70-99 chrome		each
104	93-618	Cylinder studs 85 & later	16837-85B	set
105	98-540	Dowel .250"x.500"		each
106	17-65	Oil pressure switch tall	26561-84	each
	17-61	Oil pressure switch short	26552-72	each
107	98-538	Screen plug	26263-80	each
108	95-703	O-ring 84-99	11105	pkg 10
109	98-511	Spring, crankcase 70-99	24982-70	each

HARLEY DAVIDSON® 80 C.I.

#	PART#	DESCRIPTION	OEM#	QTY
110	98-510	Screen, crankcase	24981-70	each
111	21-123	Spigot tube	63533-41	each
112	95-602	Pinion bearing 87-99 White	24626-87	each
	95-603	Pinion bearing 87-99 Green	24628-87	each
	95-604	Pinion bearing 87-99 Red	24641-87	each
	95-605	Pinion bearing 87-99 Blue	24643-87	each
113	98-531	Pinion bearing retaining ring	11177	each
114	300-453	Bushing, oil pump 36 & ltr	24641-36	each
115	95-310	Bearing race 58-92 std. size	24599-58	each
	95-430	Bearing race 58-92 +.002"	24600-58A	each
	95-429	Bearing race 93-99 std. size	24599-58B	each
116	206-54	Engine case kit 84-91 3.500" bore natural		assy.
	206-55	Engine case kit 84-91 3.500" bore black		assy.
	206-56	Engine case kit 92-99 3.500" bore natural		assy.
	206-57	Engine case kit 92-99 3.500" bore black		assy.
117	98-620	Check ball spring	26262-80	each
118	98-617	Check ball	8873	each

Every attempt has been made to insure proper fitment of our parts for the applications listed in this guide. It is the end users responsibility to exercise good judgement in the part selection, installation & maintenance of their motor when installing parts referred to in this reference guide. Midwest MC Supply has no control over the judgement of others & assumes no responsibility or liability of any nature for the failure of others to use good judgement.

NEXT PAGE:

S&S® 88, 96, 100, 107, 111, 113, 117, 124 C.I.

S&S® 88, 96, 100, 107, 111, 113, 117, 124 C.I.

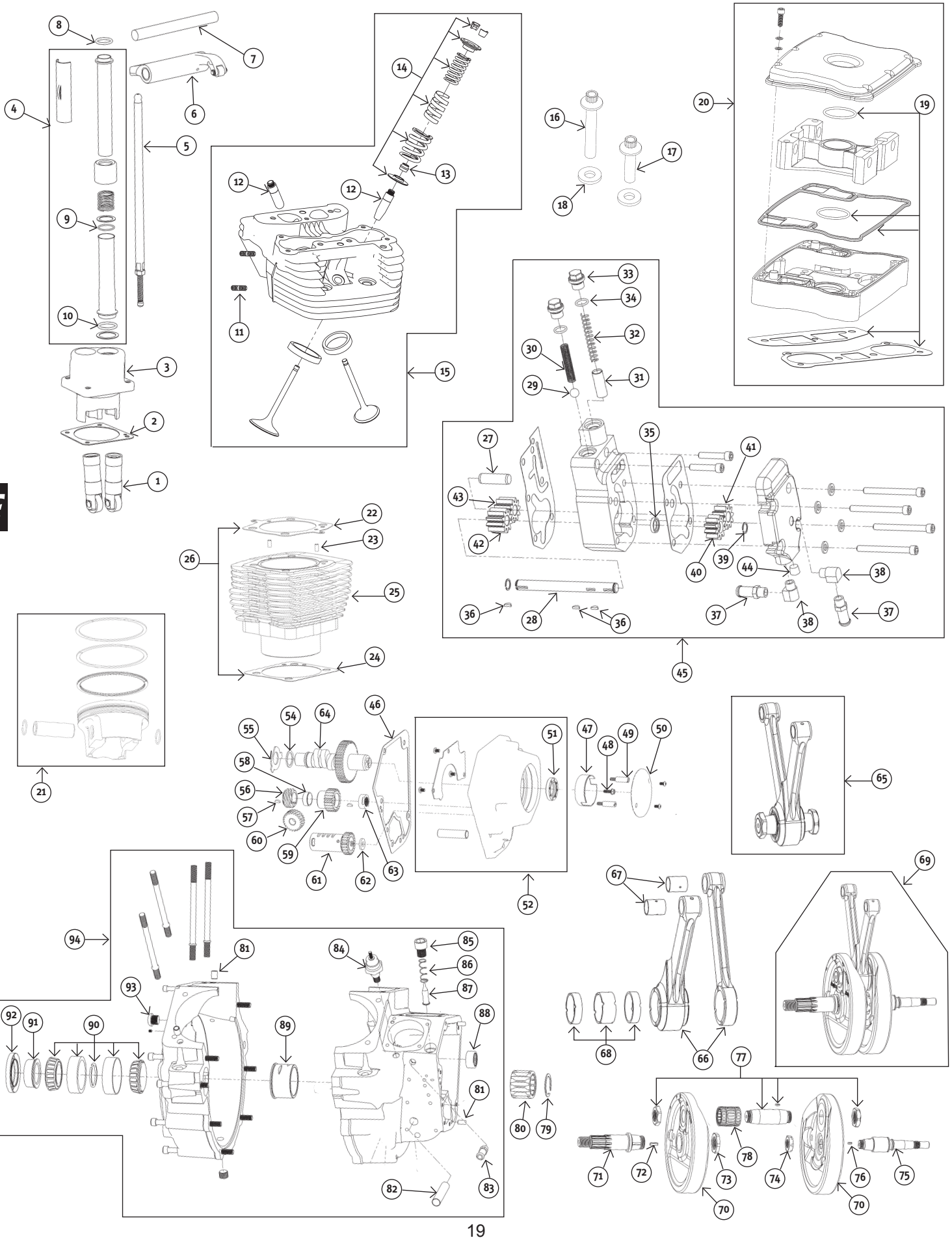

S&S® 88, 96, 100, 107, 111, 113, 117, 124 C.I.

#	PART#	DESCRIPTION	OEM#	QTY	DISPLACEMENT FITMENT
1	91-880	Ultima® lifter	18523-86	each	88,96,100,107,111,113,117,124
2	78-670	Rear Tappet block gasket		each	88,96,100,107,111,113,117,124
	78-671	Front Tappet block gasket		each	88,96,100,107,111,113,117,124
3	91-697	Tappet blocks, 4.0" bore motors, w/hardware		set	100,111,113,117,124
	91-613	Tappet blocks, w/hardware		set	88"-96"
4	91-775	Pushrod cover assembly		each	88,96,100,107,111,113,117,124
5	91-795	Pushrod set adjustable, std. length		set	88,96,100,107,111,113,117,124
6	91-699	Rocker arm set, 1.675 ratio		set	88,96,100,107,111,113,117,124
7	91-666	Rocker arm shaft	17611-83	each	88,96,100,107,111,113,117,124
8	78-675	Pushrod O-ring upper	11157	each	88,96,100,107,111,113,117,124
9	78-673	Pushrod O-ring middle	11132	each	88,96,100,107,111,113,117,124
10	78-674	Pushrod O-ring bottom	11145	each	88,96,100,107,111,113,117,124
11	66-242	Exhaust stud	16715-83	each	88,96,100,107,111,113,117,124
12	91-388	Valve guide 84-99 int. or exh. Std.	18112-92	each	88,96,100,107,111,113,117,124
	91-389	Valve guide 84-99 int. or exh. +.001"	18130-83C	each	88,96,100,107,111,113,117,124
	91-390	Valve guide 84-99 int. or exh. +.002"	18131-83C	each	88,96,100,107,111,113,117,124
	91-391	Valve guide 84-99 int. or exh. +.003"	18133-83A	each	88,96,100,107,111,113,117,124
13	91-770	Valve seal int. or exh.	18001-83B	each	88,96,100,107,111,113,117,124
14	91-758	Valve spring kit max lift .700"		kit	88,96,100,107,111,113,117,124
	91-543	Valve spring kit max lift .650"		kit	88,96,100,107,111,113,117,124
15	93-890	Front cylinder head 4.0 natural assembled		each	107,113
	93-891	Rear cylinder head 4.0 natural assembled		each	107,113
	93-892	Front cylinder head 4.0 black assembled		each	107,113
	93-893	Rear cylinder head 4.0 black assembled		each	107,113
	93-90	Front cylinder head 4.0 polished assembled		each	107,113
	93-91	Rear cylinder head 4.0 polished assembled		each	107,113
16	40-616	Head bolt, long	16478-85	each	88,96,100,107,111,113,117,124
17	40-617	Head bolt, short	16480-92	each	88,96,100,107,111,113,117,124
18	41-112	Head bolt washer kit 84-91	16482-85	kit	88,96,100,107,111,113,117,124
19	77-443	Rocker box O-ring & gasket kit.(die cast covers only)		kit	88,96,100,107,111,113,117,124
20	89-516	93-99 Rkr box assy.Ultima® 2 piece solid top, Includes hdwre/gskts		set	88,96,100,107,111,113,117,124
	89-496	93-99 Rkr box assy.2 piece w/hole in center, Includes hdwre/gskts		set	88,96,100,107,111,113,117,124
21	93-960	Piston set w/rings,clips,pins 4.0" std (Use with Ultima® cylinders only)		set	107"
	93-961	Piston set w/rings,clips,pins 4.0" +.005" (Use with Ultima® cylinders only)		set	107"
	93-962	Piston set w/rings,clips,pins 4.0" +.010" (Use with Ultima® cylinders only)		set	107"
	93-963	Piston set w/rings,clips,pins 4.0" +.020"(Use with Ultima® cylinders only)		set	107"
	93-964	Piston set w/rings,clips,pins 4.0" +.030"(Use with Ultima® cylinders only)		set	107"
	93-885	Piston set w/rings,clips,pins 4.0" std (Ultima or S&S® cylinder compatible)		set	113"
	93-886	Piston set w/rings,clips,pins 4.0" +.005" (Ultima or S&S® cylinder compatible)		set	113"
	93-887	Piston set w/rings,clips,pins 4.0" +.010" (Ultima or S&S® cylinder compatible)		set	113"
	93-888	Piston set w/rings,clips,pins 4.0" +.020" (Ultima or S&S® cylinder compatible)		set	113"
	93-889	Piston set w/rings,clips,pins 4.0" +.030" (Ultima or S&S® cylinder compatible)		set	113"
	93-780	Piston set w/pin & clips only 3.625" std. (purchase rings seperately)		set	96"
	93-781	Piston set w/pin & clips only 3.625" +.005" (purchase rings seperately)		set	96"
	93-782	Piston set w/pin & clips only 3.625" +.010" (purchase rings seperately)		set	96"
	93-783	Piston set w/pin & clips only 3.625" +.020" (purchase rings seperately)		set	96"
	93-784	Piston set w/pin & clips only 3.625" +.030" (purchase rings seperately)		set	96"
	93-631	Ring kit for 3.625" pistons std.		pair	96"
	93-632	Ring kit for 3.625" pistons +.005"		pair	96"
	93-633	Ring kit for 3.625" pistons +.010"		pair	96"
	93-634	Ring kit for 3.625" pistons +.020"		pair	96"
	93-635	Ring kit for 3.625" pistons +.030"		pair	96"
22	78-678	Head gasket front or rear MLS		each	100,107,113
23	98-540	Dowel .250"x.500"		each	88,96,100,107,111,113,117,124
24	78-676	Base gasket front MLS		each	100,107,113
	78-677	Base gasket rear MLS		each	100,107,113
25	93-858	Front cylinder natural 4.0" bore (107 use w/Ultima® pistons listed only)		each	107,113
	93-859	Rear cylinder natural 4.0" bore (107 use w/Ultima® pistons listed only)		each	107,113
	93-862	Front cylinder black 4.0" bore (107 use w/Ultima® pistons listed only)		each	107,113
	93-863	Rear cylinder black 4.0" bore (107 use w/Ultima® pistons listed only)		each	107,113
	93-58	Front cylinder polished 4.0" bore (107 use w/Ultima® pistons listed only)		each	107,113
	93-59	Rear cylinder polished 4.0" bore (107 use w/Ultima® pistons listed only)		each	107,113
26	78-248	Head & base gasket front or rear .030" MLS		pair	96
	78-249	Head & base gasket front or rear .040" MLS		pair	96
27	98-618	Idler pin	26327-68	each	88,96,100,107,111,113,117,124
28	98-334	Drive shaft	26346-70	each	88,96,100,107,111,113,117,124
29	98-617	Check ball	8873	each	88,96,100,107,111,113,117,124
30	98-620	Check ball spring	26262-80	each	88,96,100,107,111,113,117,124
31	98-623	Plunger	26400-82	each	88,96,100,107,111,113,117,124
32	98-619	Plunger spring	26207-83	each	88,96,100,107,111,113,117,124
33	41-888	Spring cap	26263-80	kit	88,96,100,107,111,113,117,124
34	95-828	O-ring 84'-99'	11105	pkg.5	88,96,100,107,111,113,117,124
35	95-753	Oil seal	26227-58	pkg.5	88,96,100,107,111,113,117,124
36	98-272	Woodruff key	26348-15	each	88,96,100,107,111,113,117,124
37	21-123	Spigot tube	63533-41	each	88,96,100,107,111,113,117,124
38	21-185	Spigot elbow		each	88,96,100,107,111,113,117,124
39	98-325	Snap ring	26348-36	each	88,96,100,107,111,113,117,124
40	98-615	Feed, drive gear 14T 84-99 For std. volume pumps only	26328-74	each	88,100,107,113
41	98-616	Feed, idler gear 14T 84-99 For std. volume pumps only	26326-62A	each	88,100,107,113
42	98-613	Return, drive gear 14T 84-99 For std. volume pumps only	26315-68A	each	88,96,100,107,111,113,117,124
43	98-614	Return, idler gear 14T 84-99 For std. volume pumps only	26317-68A	each	88,100,107,113

S&S® 88, 96, 100, 107, 111, 113, 117, 124 C.I.

#	PART#	DESCRIPTION	OEM#	QTY	DISPLACEMENT FITMENT
44	98-622	Pressure plug	45830-48	each	88,100,107,113
45	98-516	Ultima® std. volume oil pump 92-99 polished w/hdwre & gaskets		each	88,100,107,113
	98-517	Ultima® H.O. (high output) oil pump 92-99 polished w/hdwre & gaskets		each	88,96,100,107,111,113,117,124
	98-520	Ultima® H.O. (high output) oil pump 92-99 black w/hdwre & gaskets		each	88,96,100,107,111,113,117,124
46	78-672	Gasket, cam cover	25225-70B	each	88,96,100,107,111,113,117,124
47	53-528	Ignition rotor (gold)	32402-83	each	88,96,100,107,111,113,117,124
48	53-529	Ignition rotor screw	2611C	each	88,96,100,107,111,113,117,124
49	91-352	Ignition timing screws	32606-82	each	88,96,100,107,111,113,117,124
50	89-304	Point cover domed, chrome 70-99	32524-83	each	88,96,100,107,111,113,117,124
	89-114	Point cover Ultima® domed, chrome 70-99 w/hdwre & gasket	32524-83	each	88,96,100,107,111,113,117,124
51	95-222	Oil seal	83162-51	each	88,96,100,107,111,113,117,124
52	88-110	Cam cover Ultima®	25268-84A	each	88,96,100,107,111,113,117,124
	88-53	Cam cover 73-92 w/hdwre & gasket chrome	25258-80B	each	88,96,100,107,111,113,117,124
54	98-378	Cam shim .070"	25554-36	each	88,96,100,107,111,113,117,124
	98-375	Cam shim .055"	25551-36	each	88,96,100,107,111,113,117,124
	98-376	Cam shim .060"	25552-36	each	88,96,100,107,111,113,117,124
	98-377	Cam shim .065"	25553-36	each	88,96,100,107,111,113,117,124
	98-379	Cam shim .075"	25555-36	each	88,96,100,107,111,113,117,124
	98-380	Cam shim .080"	25556-36	each	88,96,100,107,111,113,117,124
55	98-372	Washer, cam thrust	25550-57	each	88,96,100,107,111,113,117,124
56	98-359	Gear, oil pump drive	26349-73	each	88,96,100,107,111,113,117,124
57	98-305	Woodruff key	23985-54	each	88,96,100,107,111,113,117,124
58	98-89	Pinion gear spacer	24703-54B	each	88,96,100,107,111,113,117,124
59	98-588	Gear, pinion Red	24043-78	each	88,96,100,107,111,113,117,124
	98-585	Gear, pinion Orange	24040-78	each	88,96,100,107,111,113,117,124
	98-586	Gear, pinion White	24041-78	each	88,96,100,107,111,113,117,124
	98-587	Gear, pinion Yellow	24042-78	each	88,96,100,107,111,113,117,124
	98-589	Gear, pinion Blue	24044-78	each	88,96,100,107,111,113,117,124
	98-590	Gear, pinion Green	24045-78	each	88,96,100,107,111,113,117,124
	98-591	Gear, pinion Black	24046-78	each	88,96,100,107,111,113,117,124
60	98-358	Gear, oil pump driven	26345-73	each	88,96,100,107,111,113,117,124
61	98-512	Breather gear std.	25313-77	each	88,96,100,107,111,113,117,124
	98-812	Breather gear +.030" 77 & ltr	25313-77	each	88,96,100,107,111,113,117,124
62	98-80	Breather gear shim .110" 79 & ltr	25313-77A	each	88,96,100,107,111,113,117,124
	98-81	Breather gear shim .115" 79 & ltr	25321-79	each	88,96,100,107,111,113,117,124
	98-82	Breather gear shim .120" 79 & ltr	25322-79	each	88,96,100,107,111,113,117,124
	98-83	Breather gear shim .125" 79 & ltr	25323-79	each	88,96,100,107,111,113,117,124
63	98-302	Nut, pinion	24023-54	each	88,96,100,107,111,113,117,124
64	114-68	MW520 Ultima® cam .490 lift		each	88,96
	114-246	MW248 Ultima® cam .600 lift		each	100,107,111
	114-245	MW264 Ultima® cam .625 lift		each	113,117,124
65	98-571	Ultima® 7.440" connecting rods w/crankpin,nuts & alloy caged rod bearings		set	88,96,100,107,113
66	98-573	Ultima® 7.440" connecting rods only w/unfinished bushings and races installed		set	88,96,100,107,113
67	95-115	Wristpin bushing, std. size	24334-36	each	88,96,100,107,113
	95-389	Wristpin bushing, +.002"		each	88,96,100,107,113
68	95-165	Rod races set of 3 41 & ltr		set	88,96,100,107,113
69	98-523	4.000" stroke Ultima® 5 piece crankshaft 7.44 rods		asy	100
	98-552	4.250" stroke Ultima® 5 piece crankshaft 7.44 rods		asy	107
	98-553	4.500" stroke Ultima® 5 piece crankshaft 7.44 rods		asy	113
	98-550	4.625" stroke Ultima® 5 piece crankshaft 7.44 rods		asy	96
70	98-654	Ultima® counterweights 4.000" stroke		pair	100
	98-650	Ultima® counterweights 4.250" stroke		pair	88,107
	98-651	Ultima® counterweights 4.500" stroke		pair	113
	98-652	Ultima® counterweights 4.625" stroke		pair	96
71	98-339	Sprocket shaft		each	88,96,100,107,111,113,117,124
72	94-137	Woodruff key	23985-56	each	88,96,100,107,111,113,117,124
73	98-539	Nut, sprocket shaft 1-1/8"-16	24017-80	each	88,96,100,107,111,113,117,124
74	98-422	Nut, pinion shaft 3/4"-20	24016-80	each	88,96,100,107,111,113,117,124
75	98-549	Pinion Shaft .250" longer		each	100111113117124.00
	98-546	Pinion shaft 81-99 long nose		each	88,96
76	98-475	Woodruff key	11218	each	88,96,100,107,111,113,117,124
77	98-537	Crankpin w/nut & key		kit	88,96,100,107,111,113,117,124
78	95-259	Rod roller bearings & retainer cage	24385-40B	kit	88,96,100,107,111,113,117,124
79	98-531	Pinion bearing retaining ring	11177	each	88,96,100,107,111,113,117,124
80	95-602	Pinion bearing White	24626-87	each	88,96,100,107,111,113,117,124
	95-603	Pinion bearing Green	24628-87	each	88,96,100,107,111,113,117,124
	95-604	Pinion bearing Red	24641-87	each	88,96,100,107,111,113,117,124
	95-605	Pinion bearing Blue	24643-87	each	88,96,100,107,111,113,117,124
81	98-540	Dowel pin .250"x.500"	358	each	88,96,100,107,111,113,117,124
82	300-453	Bushing, oil pump 36 & ltr	24641-36	each	88,96,100,107,111,113,117,124
83	21-123	Spigot tube	63533-41	each	88,96,100,107,111,113,117,124
84	17-65	Oil pressure switch tall	26561-84	each	88,96,100,107,111,113,117,124
	17-61	Oil pressure switch short	26552-72	each	88,96,100,107,111,113,117,124
85	98-538	Screen plug	26263-80	each	88,96,100,107,111,113,117,124
86	98-511	Spring, crankcase 70-99 BT	24982-70	each	88,96,100,107,111,113,117,124
87	98-510	Screen, crankcase	24981-70	each	88,96,100,107,111,113,117,124
88	95-173	Cam bearing	9058	each	88,96,100,107,111,113,117,124
89	95-429	Bearing race	24599-58B	each	88,96,100,107,111,113,117,124
90	95-320	Bearing & race set	9028	set	88,96,100,107,111,113,117,124
91	98-360	Spacer, sprocket shaft 71-99 BT	24002-700	each	88,96,100,107,111,113,117,124
92	95-805	Oil seal	12026	each	88,96,100,107,111,113,117,124
93	98-490A	Timing plug	720	each	88,96,100,107,111,113,117,124

S&S® 88, 96, 100, 107, 111, 113, 117, 124 C.I.

#	PART#	DESCRIPTION	OEM#	QTY	DISPLACEMENT FITMENT
94	206-50	92 & later 3.625" bore motors natural		asy	88,96
	206-51	92 & later 3.625" bore motors black		asy	88,96
	206-42	92 & later 3.875" & 4.0" bore motors natural		asy	100,107,113
	206-43	92 & later 3.875" & 4.0" bore motors black		asy	100,107,113

Every attempt has been made to insure proper fitment of our parts for the applications listed in this guide. It is the end users responsibility to exercise good judgement in the part selection, installation & maintenance of their motor when installing parts referred to in this reference guide. Midwest MC Supply has no control over the judgement of others & assumes no responsibility or liability of any nature for the failure of others to use good judgement.

MERCH PERFORMANCE® 120, 125, 131 C.I.

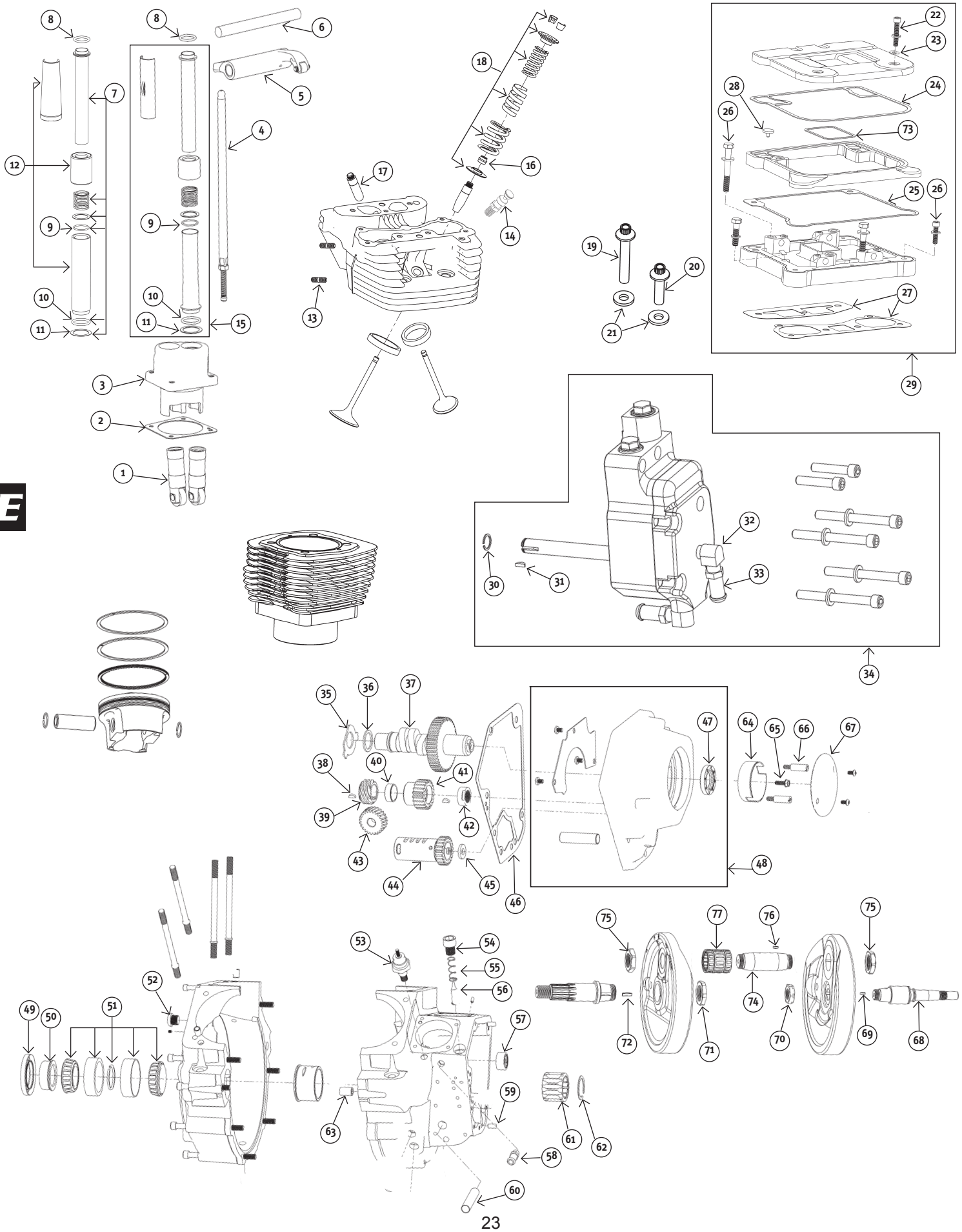

MERCH PERFORMANCE® 120, 125, 131 C.I.

#	PART#	DESCRIPTION	OEM#	QTY	DISPLACEMENT FITMENT
1	91-880	Ultima lifter	18523-86	EA	120,125,131
2	78-670	Rear Tappet block gasket		EA	120,125,131
	78-671	Front Tappet block gasket		EA	120,125,131
3	91-697	Tappet blocks, 4.0" bore motors, w/hardware		SET	120,125,131
4	91-795	Pushrod set adjustable, std. length		SET	120,125,131
	91-797	Pushrod set adjustable, +.200 length		SET	120,125,131
5	91-699	Rocker arm set, 1.675 ratio		SET	120,125,131
6	91-666	Rocker arm shaft	17611-83	EA	120,125,131
7	89-115	Pushrod cover hardware kit (1motor)		KIT	120,125,131
8	78-675	Pushrod O-ring upper	11157	EA	120,125,131
9	78-673	Pushrod O-ring middle	11132	EA	120,125,131
10	78-674	Pushrod O-ring bottom	11145	EA	120,125,131
11	91-853	Lower pushrod washer	6737	EA	120,125,131
12	91-776	Pushrod cover assembly set +.500" (1 motor)		SET	131
13	66-242	Exhaust stud	16715-83	EA	120,125,131
14	93-772	compression release 10mm		EA	120,125,131
15	91-775	Pushrod cover assembly		EA	120,125
16	91-770	Valve seal for B.T. 84-99	18001-83B	EA	120,125,131
17	91-388	Valve guide 84-99 int. or exh. Std.	18112-92	EA	120,125,131
	91-389	Valve guide 84-99 int. or exh. +.001"	18130-83C	EA	120,125,131
	91-390	Valve guide 84-99 int. or exh. +.002"	18131-83C	EA	120,125,131
	91-391	Valve guide 84-99 int. or exh. +.003"	18133-83A	EA	120,125,131
	91-392	Valve guide 84-99 int. or exh. +.004"		EA	120,125,131
18	91-758	Spring kit, Ultima, stock to .700" lift.		KIT	120,125,131
	91-543	Spring kit, Manley, stock to .650" lift.		KIT	120,125,131
19	40-616	Head bolt, long	16478-85	EA	120,125,131
20	40-617	Head bolt, short	16480-92	EA	120,125,131
21	41-112	Head bolt washer kit 84-91	16482-85	KIT	120,125,131
22	40-510	Stainless Rocker cover screw kit 84-99		KIT	120,125,131
23	78-444	Fiber washer 84-99	63858-49	PKG 10	120,125,131
	78-548	Copper washer 84-99		PKG 10	120,125,131
24	78-365	92-99 Upper rocker cover gasket, rubber Cometic Evo B.T.	17356-92	PKG 5	120,125,131
25	78-363	92-99 Lower rocker cover gasket, rubber Cometic Evo B.T.	17355-92	PKG 5	120,125,131
26	89-416	Rocker box bolt kit		KIT	120,125,131
27	78-321	2 piece gasket set with silicone bead 84-99		SET	120,125,131
28	78-205	Umbrella valve 93-99	26856-89	EA	120,125,131
29	89-450	93-99 Rkr box assy. Ft or Rr 3 piece OEM style w/gaskets/hdwre		EA	120,125,131
	89-516	93-99 Rkr box assy.Ultima 2 piece solid top, Includes hdwre/gskts		SET	120,125,131
	89-496	93-99 Rkr box assy.2 piece w/hole in center, Includes hdwre/gskts		SET	120,125,131
30	98-329	Clip ring	11002	EA	120,125,131
31	98-272	Woodruff key	26348-15	EA	120,125,131
32	21-185	Spigot elbow 84-99		EA	120,125,131
33	21-123	Spigot tube 84-99	63533-41	EA	120,125,131
34	98-515	Oil pump, Ultima 92-99 Std. vol. polished w/hdwre & gskts		EA	120,125,131
	98-517	Oil pump, Ultima 92-99 High output polished w/hdwre & gskts		EA	120,125,131
	98-520	Oil pump, Ultima 92-99 High output wrinkle blk w/hdwre & gskts		EA	120,125,131
35	98-372	Washer, cam thrust	25550-57	EA	120,125,131
36	98-375	Cam shim .055"	25551-36	EA	120,125,131
	98-376	Cam shim .060"	25552-36	EA	120,125,131
	98-377	Cam shim .065"	25553-36	EA	120,125,131
	98-378	Cam shim .070"	25554-36	EA	120,125,131
	98-379	Cam shim .075"	25555-36	EA	120,125,131
	98-380	Cam shim .080"	25556-36	EA	120,125,131
37	114-245	Cam MW264 .625" lift		EA	120,125,131
38	98-305	Woodruff key	23985-54	EA	120,125,131
39	98-359	Gear, oil pump drive	26349-73	EA	120,125,131
40	98-89	Pinion gear spacer	24703-54B	EA	120,125,131
41	98-588	Gear, pinion Red	24043-78	EA	120,125,131
	98-585	Gear, pinion Orange	24040-78	EA	120,125,131
	98-586	Gear, pinion White	24041-78	EA	120,125,131
	98-587	Gear, pinion Yellow	24042-78	EA	120,125,131
	98-589	Gear, pinion Blue	24044-78	EA	120,125,131
	98-590	Gear, pinion Green	24045-78	EA	120,125,131
	98-591	Gear, pinion Black	24046-78	EA	120,125,131
42	98-302	Nut, pinion	24023-54	EA	120,125,131
43	98-358	Gear, oil pump driven	26345-73	EA	120,125,131
44	98-512	Breather gear std.	25313-77	EA	120,125,131
	98-812	Breather gear +.030" 77 & ltr	25313-77	EA	120,125,131
45	98-80	Breather gear shim .110" 79 & ltr	25313-77A	EA	120,125,131
	98-81	Breather gear shim .115" 79 & ltr	25321-79	EA	120,125,131
	98-82	Breather gear shim .120" 79 & ltr	25322-79	EA	120,125,131
	98-83	Breather gear shim .125" 79 & ltr	25323-79	EA	120,125,131
46	78-672	Gasket, cam cover	25225-70B	EA	120,125,131
47	95-222	Oil seal	83162-51	EA	120,125,131
48	88-110	Cam cover Ultima, chrome	25268-84A	EA	120,125,131
	88-53	Cam cover 73-92 w/hdwre & gasket chrome	25258-80B	EA	120,125,131
49	95-805	Oil seal	12026	EA	120,125,131
50	98-360	Spacer, sprocket shaft 71-99 BT	24002-700	EA	120,125,131
51	95-320	Bearing & race set	9028	SET	120,125,131
52	98-490A	Timing plug	720	EA	120,125,131
53	17-65	Oil pressure switch tall	26561-84	EA	120,125,131
	17-61	Oil pressure switch short	26552-72	EA	120,125,131

MERCH PERFORMANCE® 120, 125, 131 C.I.

#	PART#	DESCRIPTION	OEM#	QTY	DISPLACEMENT FITMENT
54	98-538	Screen plug		EA	120,125,131
55	98-511	Spring, crankcase 70-99 BT	24982-70	EA	120,125,131
56	98-510	Screen, crankcase	24981-70	EA	120,125,131
57	95-173	Cam bearing	9058	EA	120,125,131
58	21-123	Spigot tube	63533-41	EA	120,125,131
59	98-540	Dowel pin .250"x.500"		EA	120,125,131
60	300-453	Bushing, oil pump 36 & ltr		EA	120,125,131
61	95-602	Pinion bearing White	24626-87	EA	120,125,131
	95-603	Pinion bearing Green	24628-87	EA	120,125,131
	95-604	Pinion bearing Red	24641-87	EA	120,125,131
	95-605	Pinion bearing Blue	24643-87	EA	120,125,131
62	98-531	Pinion bearing retaining ring	11177	EA	120,125,131
63	300-541	Alignment pin .500" x.500"		EA	120,125,131
64	53-528	Ignition rotor (gold)	32402-83	EA	120,125,131
65	53-529	Ignition rotor screw	2611C	EA	120,125,131
66	91-352	Ignition timing screws	32606-82	EA	120,125,131
67	89-304	Point cover domed, chrome 70-99	32524-83	EA	120,125,131
	89-114	Point cover Ultima domed, chrome 70-99 w/hdwre & gasket	32524-83	EA	120,125,131
68	98-549	Pinion Shaft .250" longer, big bore case		EA	120,125,131
69	98-475	Woodruff key	11218	EA	120,125,131
70	98-422	Nut, pinion shaft 3/4"-20	24016-80	EA	120,125,131
71	98-539	Nut, sprocket shaft 1-1/8"-16	24017-80	EA	120,125,131
72	94-137	Woodruff key	23985-56	EA	120,125,131
73	78-366	84-99 Inner rocker cover gasket, rubber Cometic	17358-84A	PKG 10	120,125,131
74	98-537	Crankpin w/nut & key		KIT	120,125,131
75	98-421	Nut, crank pin 1"-20	23969-83	PR	120,125,131
76	98-475	Crankpin key	23985-18	KIT	120,125,131
77	95-259	Rod roller bearings & retainer cage	24385-40B	KIT	120,125,131

E

Every attempt has been made to insure proper fitment of our parts for the applications listed in this guide. It is the end users responsibility to exercise good judgement in the part selection, installation & maintenance of their motor when installing parts referred to in this reference guide. Midwest MC Supply has no control over the judgement of others & assumes no responsibility or liability of any nature for the failure of others to use good judgement.

NEXT PAGE:
REVTECH® 88, 100, 100 (4X4), 110 C.I.

REVTECH® 88, 100, 100 (4X4), 110 C.I.

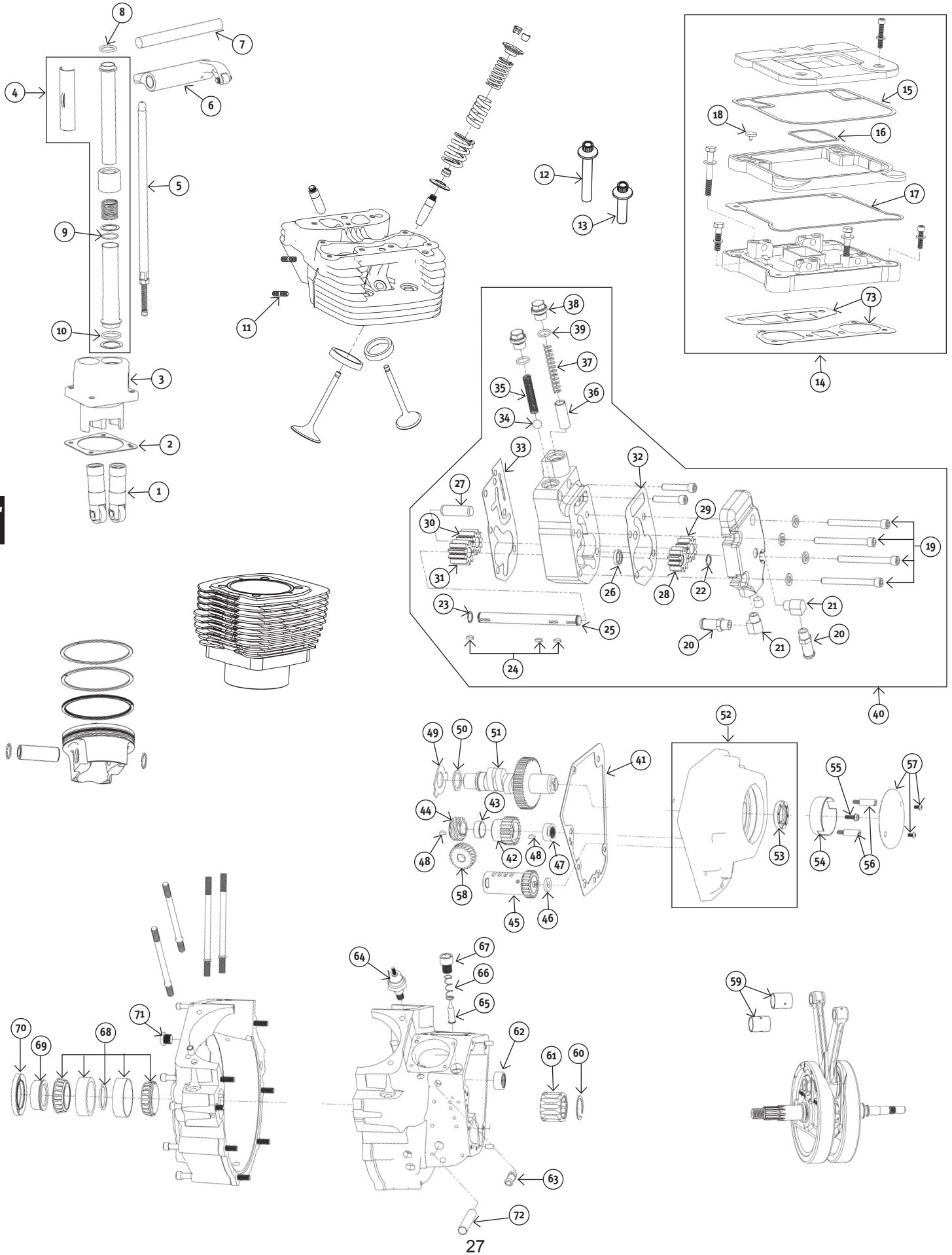

E

REVTECH® 88, 100, 100 (4X4), 110 C.I.

#	PART#	DESCRIPTION	OEM#	QTY	DISPLACEMENT FITMENT 91-880
1	91-880	Ultima lifter	18523-86	EA	88,100,100(4X4),110
2	78-670	Rear Tappet block gasket		EA	88,100,100(4X4),110
	78-671	Front Tappet block gasket		EA	88,100,100(4X4),110
3	91-697	Tappet blocks, 4.0" bore motors, w/hardware, chrome		SET	100,100(4X4),110
	91-613	Tappet blocks, w/hardware, chrome		SET	88
4	91-775	Pushrod cover assembly		EA	88,100,100(4X4),110
5	91-795	Pushrod set adjustable, std. length		SET	88,100,100(4X4),110
6	91-699	Rocker arm set, 1.675 ratio		SET	88,100,100(4X4),110
7	91-666	Rocker arm shaft	17611-83	EA	88,100,100(4X4),110
8	78-675	Pushrod O-ring upper	11157	EA	88,100,100(4X4),110
9	78-673	Pushrod O-ring middle	11132	EA	88,100,100(4X4),110
10	78-674	Pushrod O-ring bottom	11145	EA	88,100,100(4X4),110
11	66-242	Exhaust stud	16715-83	EA	88,100,100(4X4),110
12	40-616	Head bolt, long	16478-85	EA	88,100,100(4X4),110
13	40-617	Head bolt, short	16480-92	EA	88,100,100(4X4),110
14	89-516	93-99 Rkr box assy.Ultima 2 piece solid top, Includes hdwre/gskts, chrome		SET	88,100
	89-496	93-99 Rkr box assy.2 piece w/hole in center, Includes hdwre/gskts, chrome		SET	88,100
15	78-365	Upper gasket rubber	17356-92	PKG 5	88,100
16	78-366	Center gasket rubber	17358-84A	PKG 5	88,100
17	78-363	Lower gasket rubber		PKG 5	88,100
18	78-205	Umbrella valve/seal	26856-89	EA	88,100
19	41-787	Oil pump bolt kit. Allen head 92-99		KIT	88,100,100(4X4),110
20	21-123	Spigot tube 84-99	63533-41	EA	88,100,100(4X4),110
21	21-185	Spigot elbow 84-99		EA	88,100,100(4X4),110
22	98-325	Retaining ring 84-99	26348-36	EA	88,100,100(4X4),110
23	98-329	Retaining ring 84-99	11002	EA	88,100,100(4X4),110
24	98-272	Woodruff key	26348-15	EA	88,100,100(4X4),110
25	98-334	Drive shaft 84-99	26346-70	EA	88,100,100(4X4),110
26	95-221	Oil seal 84-99	26227-58	EA	88,100,100(4X4),110
27	98-618	Idler pin 84-99	26327-68	EA	88,100,100(4X4),110
28	98-615	Feed, drive gear 14T 84-99	26328-74	EA	88,100
29	98-616	Feed, idler gear 14T 84-99	26326-62A	EA	88,100
30	98-614	Return, idler gear 14T 84-99	26317-68A	EA	88,100
31	98-613	Return, drive gear 14T 84-99	26315-68A	EA	88,100
32	78-398	Gasket, oil pump cover 92-99 paper Cometic	26276-92	PKG 10	88,100
33	78-396	Gasket, oil pump base 92-99 paper Cometic	26273-92	PKG 10	88,100
34	98-617	Check ball	8873	EA	88,100
35	98-620	Check ball spring	26262-80	EA	88,100
36	98-623	Plunger	26400-82	EA	88,100
37	98-619	Plunger spring	26207-83	EA	88,100
38	41-888	Spring cap	26263-80	KIT	88,100
39	95-828	O-ring 84-99	11105	PKG 5	88,100,100(4X4),110
40	98-515	Oil pump, Ultima 92-99 std. vol. polished w/hdwre & gskts		EA	88,100
	98-517	Oil pump, Ultima 92-99 High output polished w/hdwre & gskts		EA	88,100,100(4X4),110
	98-520	Oil pump, Ultima 92-99 High output wrinkle blk w/hdwre & gskts		EA	88,100,100(4X4),110
41	78-379	Gasket, cam cover 93-99	25225-93	EA	88,100,100(4X4),110
42	98-585	Gear, pinion Orange	24040-78	EA	88,100,100(4X4),110
	98-586	Gear, pinion White	24041-78	EA	88,100,100(4X4),110
	98-587	Gear, pinion Yellow	24042-78	EA	88,100,100(4X4),110
	98-588	Gear, pinion Red	24043-78	EA	88,100,100(4X4),110
	98-589	Gear, pinion Blue	24044-78	EA	88,100,100(4X4),110
	98-590	Gear, pinion Green	24045-78	EA	88,100,100(4X4),110
	98-591	Gear, pinion Black	24046-78	EA	88,100,100(4X4),110
43	98-89	Pinion gear spacer	24703-54B	EA	88,100,100(4X4),110
44	98-359	Gear, oil pump drive 54-89	26349-73	EA	88,100
45	98-512	Gear, breather std.	25313-77A	EA	88,100
	98-812	Gear, breather +.030"	25313-77A	EA	88,100
46	98-80	Shim, breather gear .110" 79-99	25313-77A	EA	88,100
	98-81	Shim, breather gear .115" 79-99	25321-79	EA	88,100
	98-82	Shim, breather gear .120" 79-99	25322-79	EA	88,100
	98-83	Shim, breather gear .115" 79-99	25323-79	EA	88,100
47	98-302	Nut, pinion gear 54-89	24023-54	EA	88,100,100(4X4),110
48	98-305	Woodruff key 54-89	23985-54	EA	88,100,100(4X4),110
49	98-372	Washer, cam thrust	25550-57	EA	88,100,100(4X4),110
50	98-375	Cam shim .055" 84-99	25551-36	EA	88,100,100(4X4),110
	98-376	Cam shim .060" 84-99	25552-36	EA	88,100,100(4X4),110
	98-377	Cam shim .065" 84-99	25553-36	EA	88,100,100(4X4),110
	98-378	Cam shim .070" 84-99	25554-36	EA	88,100,100(4X4),110
	98-379	Cam shim .075" 84-99	25555-36	EA	88,100,100(4X4),110
	98-380	Cam shim .080" 84-99	25556-36	EA	88,100,100(4X4),110
51	114-52	Camshaft Andrews EV27 84-99		EA	88
	114-246	Ultima cam .625" lift (may require high lift springs)		EA	100,100(4X4),110
52	88-70	Cam cover 93-99 w/hdwre & gasket chrome	25266-93A	EA	88,100,100(4X4),110
53	95-222	Oil seal	83162-51	EA	88,100,100(4X4),110
54	53-528	Ignition rotor (gold)	32402-83	EA	88,100,100(4X4),110
55	53-529	Ignition rotor screw	2611C	EA	88,100,100(4X4),110
56	91-352	Ignition timing screws	32606-82	EA	88,100,100(4X4),110
57	89-304	Point cover domed, chrome 70-99	32524-83	EA	88,100,100(4X4),110
	89-114	Point cover Ultima domed, chrome 70-99 w/hdwre & gasket	32524-83	EA	88,100,100(4X4),110
58	98-358	Gear, oil pump driven 73-95 24T	26345-73	EA	88,100
59	95-115	Wristpin bushing, std. size	24334-36	EA	88,100,100(4X4),110
	95-389	Wristpin bushing, +.002"		EA	88,100,100(4X4),110

REVTECH® 88, 100, 100 (4X4), 110 C.I.

#	PART#	DESCRIPTION	OEM#	QTY	DISPLACEMENT FITMENT
60	98-531	Pinion bearing retaining ring	11177	EA	88,100,100(4X4),110
61	95-602	Pinion bearing 87-99 White	24626-87	EA	88,100,100(4X4),110
	95-603	Pinion bearing 87-99 Green	24628-87	EA	88,100,100(4X4),110
	95-604	Pinion bearing 87-99 Red	24641-87	EA	88,100,100(4X4),110
	95-605	Pinion bearing 87-99 Blue	24643-87	EA	88,100,100(4X4),110
62	95-173	Cam bearing	9058	EA	88,100,100(4X4),110
63	21-123	Spigot tube 84-99	63533-41	EA	88,100,100(4X4),110
64	17-65	Oil pressure switch tall	26561-84	EA	88,100,100(4X4),110
	17-61	Oil pressure switch short	26552-72	EA	88,100,100(4X4),110
65	98-510	Screen, crankcase	24981-70	EA	88,100,100(4X4),110
66	98-511	Spring, crankcase 70-99	24982-70	EA	88,100,100(4X4),110
67	41-888	Plug, tappet screen	26263-80	EA	88,100,100(4X4),110
68	95-320	Bearing & race set	9028	SET	88,100,100(4X4),110
69	98-360	Sprocket shaft spacer 71-99	24002-70	EA	88,100,100(4X4),110
70	95-805	Oil seal	12026	EA	88,100,100(4X4),110
71	98-490	Allen timing plug 70-99 chrome		EA	88,100,100(4X4),110
72	300-453	Bushing, oil pump 36 & ltr	24641-36	EA	88,100,100(4X4),110
73	78-321	2 piece gasket set with silicone bead 84-99		SET	88,100

Every attempt has been made to insure proper fitment of our parts for the applications listed in this guide. It is the end users responsibility to exercise good judgement in the part selection, installation & maintenance of their motor when installing parts referred to in this reference guide. Midwest MC Supply has no control over the judgement of others & assumes no responsibility or liability of any nature for the failure of others to use good judgement.

NEXT PAGE:
ULTIMA® SHOVELHEAD 96 C.I.

ULTIMA® SHOVELHEAD 96 C.I.

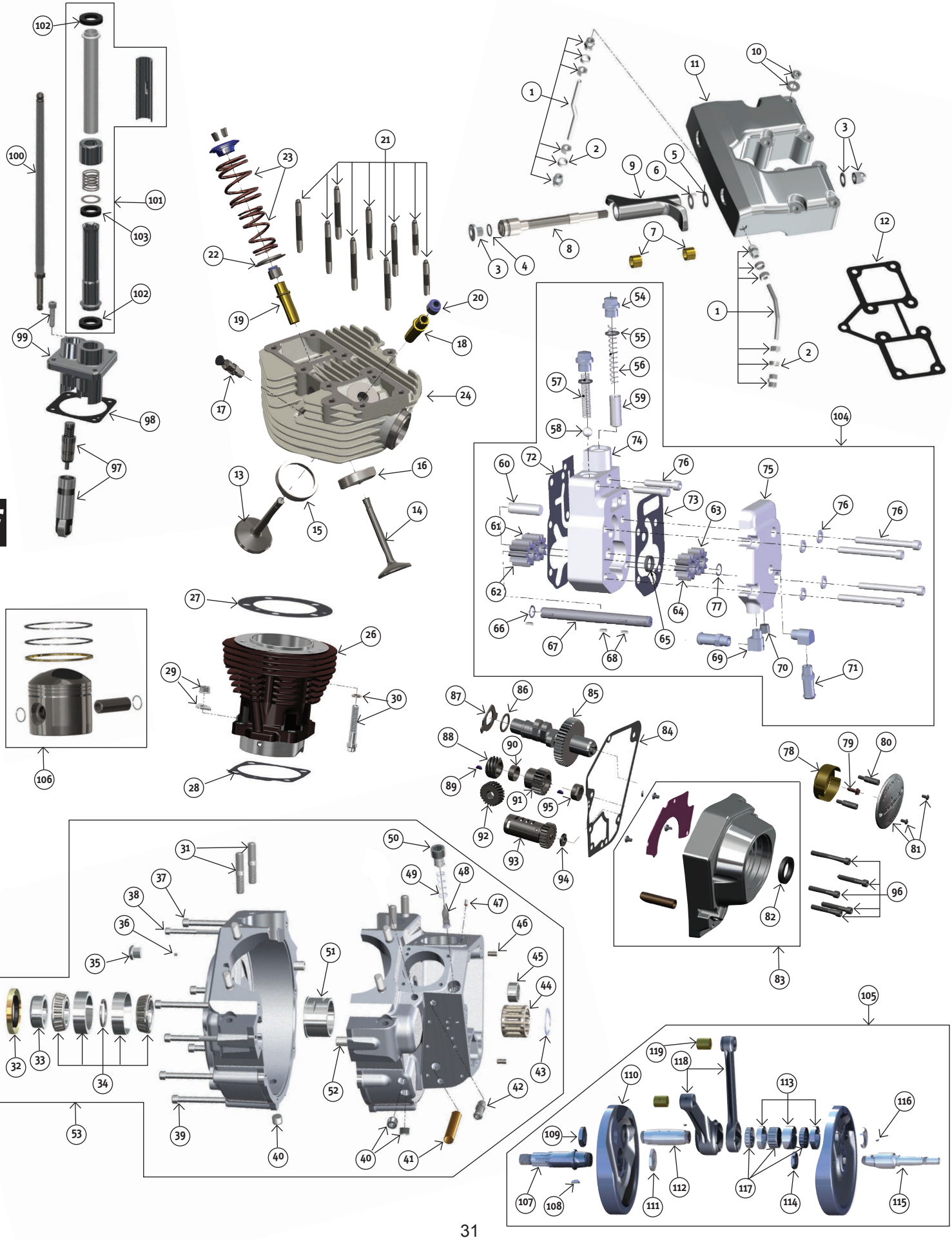

ULTIMA® SHOVELHEAD 96 C.I.

#	PART#	DESCRIPTION	OEM#	QTY
1	71-137	Rocker cover & feed oil lines. 66-84		kit
2	95-127	Oil line sleeve/O-ring	63529-57	each
3	41-779	Rocker shaft hardware		set
4	95-701	O-ring	11101	each
5	91-277	Rocker arm shim .005"		each
	91-469	Rocker arm shim .010"		each
	91-470	Rocker arm shim .020"		each
6	91-549	Rocker arm spacer	17452-66	each
7	95-356	Bushing	17428-57	each
8	91-287	Rocker arm shaft	17611-66A	each
9	91-313	Rear exh./front int. rocker arm	17360-66	each
	91-314	Front exh./rear int. rocker arm	17375-66	each
10	40-318	Chrome rocker cover hdwre kit, 66-84, 18 hex nuts/18 flat wshers	7753 6016	kit
11	89-344	Rocker arm covers, chrome, 66-84 includes chrome spacers		set
12	78-700	Rocker box gasket		each
13	91-793	Intake valve		each
14	91-792	Exhaust valve		each
15	91-573	Intake valve seat		each
16	91-572	Exhaust valve seat		each
17	93-772	Compression release 10mm		each
18	91-910	Valve guide, int.		each
19	91-910	Valve guide, exh.		each
20	91-779	Valve guide seal		each
21	91-689	Rocker box stud kit 66-84 8 long, 2 short, 1 motor mt.		kit
22	91-346	Valve spring seat		each
23	91-652	Springs		set
24	93-114B	Natural 96" Front Bare Head		each
	93-115B	Natural 96" Rear Bare Head		each
	93-118B	Black 96" Front Bare Head		each
	93-119B	Black 96" Rear Bare Head		each
	93-114P	Polish 96" Front Bare Head		each
	93-115P	Polish 96" Rear Bare Head		each
26	93-261	Front cylinder, black 3-5/8 bore stock height		each
	93-262	Rear cylinder, black 3-5/8 bore stock height		each
27	78-703	Head gasket		each
28	78-702	Base gasket		each
29	41-943	Base stud nuts & washers		kit
30	41-766	Head bolt kit, chrome	6469	kit
31	41-993	Cylinder base stud set 78-84 8 pcs.	16837-78	set
32	95-805	Oil seal	12026	each
33	98-360	Spacer, sprocket shaft 71-99 BT	24002-700	each
34	95-320	Bearing & race set	9028	set
35	98-490A	Timing plug	720	each
36	98-545	Set screw 10-24		each
37	300-533	Case bolt 5/16-18 x 2-3/4		each
38	300-535	Case bolt 1/4-20 x 4.0		each
39	300-534	Case bolt 5/16-18 x 3-1/2		each
40	98-544	1/4 pipe plug for case		each
41	300-453	Bushing, oil pump 36 & ltr		each
42	21-123	Spigot tube	63533-41	each
43	98-531	Pinion bearing retaining ring	11177	each
44	95-602	Pinion bearing White	24626-87	each
	95-603	Pinion bearing Green	24628-87	each
*	95-604	Pinion bearing Red	24641-87	each
	95-605	Pinion bearing Blue	24643-87	each
45	95-173	Cam bearing	9058	each
46	98-540	Dowel pin .250"x.500"	358	each
47	98-543	3/16 Hi pressure plug		each
48	98-510	Screen, crankcase	24981-70	each
49	98-511	Spring, crankcase 70-99 BT	24982-70	each
50	98-538	Screen plug		each
51	95-429	Bearing race	24599-58B	each
52	300-541	Alignment pin .500" x.500"		each
53	206-21	96" Ultima Shovelhead case assembly, Natural		assy
	206-22	96" Ultima Shovelhead case assembly, Black		assy
	206-23	96" Ultima Shovelhead case assembly, Polished		assy
54	41-888	Spring cap	26263-80	kit
55	95-828	O-ring 84-99	11105	pkg. 5
56	98-619	Plunger spring	26207-83	each
57	98-620	Check ball spring	26262-80	each
58	98-617	Check ball	8873	each
59	98-623	Plunger	26400-82	each
60	98-618	Idler pin	26327-68	each
61	98-605	Gear, return idle 10T		each
62	98-604	Gear, return drive 10T		each
63	98-607	Gear, feed idle 10T		each
64	98-606	Gear, feed drive 10T		each
65	95-753	Oil seal	26227-58	pkg. 5
66	98-329	Clip ring	11002	each
67	98-334	Drive shaft	26346-70	each
68	98-272	Woodruff key	26348-15	each
69	21-185	Spigot elbow		each
70	98-622	Pressure plug	45830-48	each

#	PART#	DESCRIPTION	OEM#	QTY
71	21-123	Spigot tube	63533-41	each
72	98-625	Base gasket 92 & ltr		each
73	98-627	Cover gasket 92 & Ltr		each
74	98-602	Pump base H.O. 92 & ltr pol.		each
75	98-603	Pump cover H.O. 92 & ltr pol.		each
76	41-740	Oil pump hardware kit		each_
77	98-325	Snap ring	26348-36	each
78	53-528	Ignition rotor (gold)	32402-83	each
79	53-529	Ignition rotor screw	2611C	each
80	91-352	Ignition timing screws	32606-82	each
81	89-114	Ignition cover, Ultima w/screws		each
82	96-299A	Oil seal	83162-51	each
83	88-53	Cam cover kit	25268-84A	each
84	77-715	Gasket, cam cover	25225-70B	each
85	114-16	Cam for Ultima 96" Shovelhead, Andrews BH		each
86	98-378	Cam shim .070"	25554-36	each
	98-375	Cam shim .055"	25551-36	each
	98-376	Cam shim .060"	25552-36	each
	98-377	Cam shim .065"	25553-36	each
	98-379	Cam shim .075"	25555-36	each
	98-380	Cam shim .080"	25556-36	each
87	98-372	Washer, cam thrust	25550-57	each
88	98-359	Gear, oil pump drive	26349-73	each
89	98-305	Woodruff key	23985-54	each
90	98-89	Pinion gear spacer	24703-54B	each
91	98-588	Gear, pinion Red	24043-78	each
	98-585	Gear, pinion Orange	24040-78	each
	98-586	Gear, pinion White	24041-78	each
	98-587	Gear, pinion Yellow	24042-78	each
	98-589	Gear, pinion Blue	24044-78	each
	98-590	Gear, pinion Green	24045-78	each
	98-591	Gear, pinion Black	24046-78	each
92	98-358	Gear, oil pump driven	26345-73	each
93	98-512	Breather gear std.	25313-77	each
	98-812	Breather gear +.030" 77 & ltr	25313-77	each
94	98-80	Breather gear shim .110" 79 & ltr	25313-77A	each
	98-81	Breather gear shim .115" 79 & ltr	25321-79	each
	98-82	Breather gear shim .120" 79 & ltr	25322-79	each
	98-83	Breather gear shim .125" 79 & ltr	25323-79	each
95	98-302	Nut, pinion	24023-54	each
96	40-614	Bolt kit for Ultima cam cvr. Chrome		kit
97	91-605	Hydraulic tappet		
	91-805	Hydraulic tappet body		each
98	77-713	Front tappet guide gasket		each
	77-712	Rear tappet guide gasket		each
99	91-638	Tappet guide set, chrome		set
100	91-891	Pushrod set		set
101	91-331	Pushrod cover assy. Chrome		set
102	95-701	O-ring Pushrod cover upper & lower	11101	each
103	95-241	O-ring Pushrod cover middle	11132	each
104	98-517	Oil pump complete H.O. 92 & ltr polished		each
	98-520	Oil pump complete H.O. 92 & ltr black		each
105	98-524	Crankshaft assy. 4.625" stroke .792" wristpin		assy.
106	93-140	Ultima Shovelhead piston set by Ross std. bore		set
	93-141	Ultima Shovelhead piston set by Ross .005" over		set
	93-142	Ultima Shovelhead piston set by Ross .010" over		set
	93-143	Ultima Shovelhead piston set by Ross .020" over		set
107	98-339	Sprocket shaft		each
108	94-137	Woodruff key	23985-56	each
109	98-421	Nut, crank pin 1"-20	23969-83	each
110	98-652	Crankshaft halves only 4.625" Stroke .792 wristpin		each
111	98-539	Nut, sprocket shaft 1-1/8"-16	24017-80	each
112	98-537	Crankpin w/nut & key		each
113	95-145	Rod race set for 7.44" rods		each
114	98-422	Nut, pinion shaft 3/4"-20	24016-80	each
115	98-546	Pinion Shaft std length		each
116	98-475	Woodruff key	11218	each
117	95-259	Rod roller bearings & retainer cage	24385-40B	each
118	98-573	Connecting rods H-beam 7.440" w/bushings & races		each
119	95-142	Replacement wristpin bushing .792"	24334-36	each

Every attempt has been made to insure proper fitment of our parts for the applications listed in this guide. It is the end users responsibility to exercise good judgement in the part selection, installation & maintenance of their motor when installing parts referred to in this reference guide. Midwest MC Supply has no control over the judgement of others & assumes no responsibility or liability of any nature for the failure of others to use good judgement.

ULTIMA® SHOVELHEAD 96 C.I., 3 PIECE CRANK

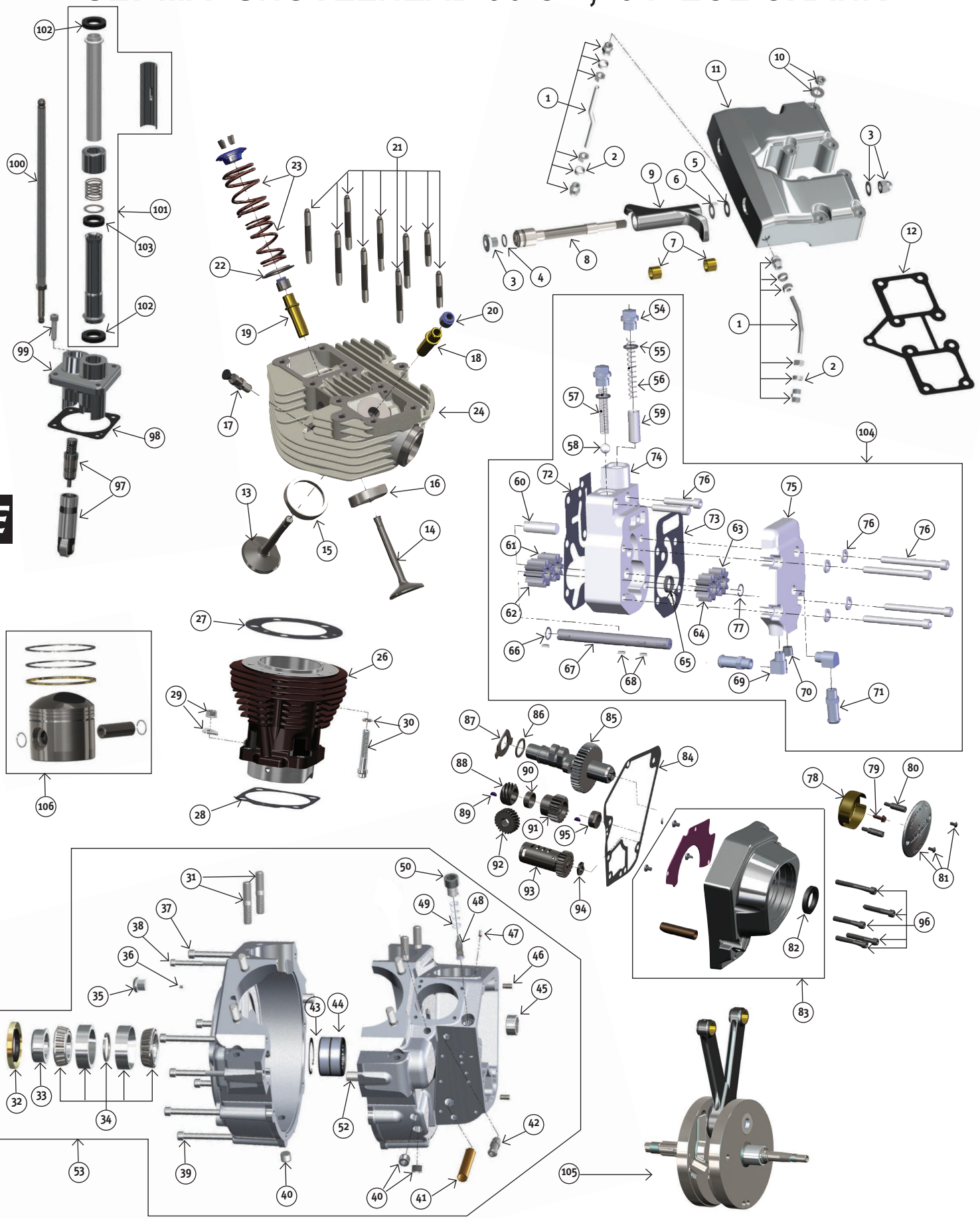

ULTIMA® SHOVELHEAD 96 C.I., 3 PIECE CRANK

#	PART#	DESCRIPTION	OEM#	QTY
1	71-137	Rocker cover & feed oil lines. 66-84		kit
2	95-127	Oil line sleeve/O-ring	63529-57	each
3	41-779	Rocker shaft hardware		set
4	95-701	O-ring	11101	each
5	91-277	Rocker arm shim .005"		each
	91-469	Rocker arm shim .010"		each
	91-470	Rocker arm shim .020"		each
6	91-549	Rocker arm spacer	17452-66	each
7	95-356	Bushing	17428-57	each
8	91-287	Rocker arm shaft	17611-66A	each
9	91-313	Rear exh./front int. rocker arm	17360-66	each
	91-314	Front exh./rear int. rocker arm	17375-66	each
10	40-318	Chrome rocker cover hdwre kit, 66-84, 18 hex nuts/18 flat wshers	7753 6016	kit
11	89-344	Rocker arm covers, chrome, 66-84 includes chrome spacers		set
12	78-700	Rocker box gasket		each
13	91-793	Intake valve		each
14	91-792	Exhaust valve		each
15	91-573	Intake valve seat		each
16	91-572	Exhaust valve seat		each
17	93-772	Compression release 10mm		each
18	91-910	Valve guide, int.		each
19	91-910	Valve guide, exh.		each
20	91-779	Valve guide seal		each
21	91-689	Rocker box stud kit 66-84 8 long, 2 short, 1 motor mt.		kit
22	91-346	Valve spring seat		each
23	91-652	Springs		set
24	93-114B	Natural 96" Front Bare Head		each
	93-115B	Natural 96" Rear Bare Head		each
	93-118B	Black 96" Front Bare Head		each
	93-119B	Black 96" Rear Bare Head		each
	93-114P	Polish 96" Front Bare Head		each
	93-115P	Polish 96" Rear Bare Head		each
26	93-261	Front cylinder, black 3-5/8 bore stock height		each
	93-262	Rear cylinder, black 3-5/8 bore stock height		each
27	78-703	Head gasket		each
28	78-702	Base gasket		each
29	41-943	Base stud nuts & washers		kit
30	41-766	Head bolt kit, chrome	6469	kit
31	41-993	Cylinder base stud set 78-84 8 pcs.	16837-78	set
32	95-805	Oil seal	12026	each
33	98-360	Spacer, sprocket shaft 71-99 BT	24002-700	each
34	95-320	Bearing & race set	9028	set
35	98-490A	Timing plug	720	each
36	98-545	Set screw 10-24		each
37	300-533	Case bolt 5/16-18 x 2-3/4		each
38	300-535	Case bolt 1/4-20 x 4.0		each
39	300-534	Case bolt 5/16-18 x 3-1/2		each
40	98-544	1/4 pipe plug for case		each
41	300-453	Bushing, oil pump 36 & ltr		each
42	21-123	Spigot tube	63533-41	each
43	98-581	Pinion bearing retaining ring	11177	each
44	95-809	Pinion bearing	24626-87	each
45	95-173	Cam bearing	9058	each
46	98-540	Dowel pin .250"x.500"	358	each
47	98-543	3/16 Hi pressure plug		each
48	98-510	Screen, crankcase	24981-70	each
49	98-511	Spring, crankcase 70-99 BT	24982-70	each
50	98-538	Screen plug		
52	300-541	Alignment pin .500" x.500"		each
53	206-26	96" Ultima Shovelhead case assembly, Natural		assy
	206-27	96" Ultima Shovelhead case assembly, Black		assy
	206-28	96" Ultima Shovelhead case assembly, Polished		assy
54	41-888	Spring cap	26263-80	kit
55	95-828	O-ring 84-99	11105	pkg. 5
56	98-619	Plunger spring	26207-83	each
57	98-620	Check ball spring	26262-80	each
58	98-617	Check ball	8873	each
59	98-623	Plunger	26400-82	each
60	98-618	Idler pin	26327-68	each
61	98-605	Gear, return idle 10T		each
62	98-604	Gear, return drive 10T		each
63	98-607	Gear, feed idle 10T		each
64	98-606	Gear, feed drive 10T		each
65	95-753	Oil seal	26227-58	pkg. 5
66	98-329	Clip ring	11002	each
67	98-334	Drive shaft	26346-70	each
68	98-272	Woodruff key	26348-15	each
69	21-185	Spigot elbow		each
70	98-622	Pressure plug	45830-48	each
71	21-123	Spigot tube	63533-41	each
72	98-625	Base gasket 92 & ltr		each
73	98-627	Cover gasket 92 & Ltr		each
74	98-602	Pump base H.O. 92 & ltr pol.		each
75	98-603	Pump cover H.O. 92 & ltr pol.		each
76	41-740	Oil pump hardware kit		each_
77	98-325	Snap ring	26348-36	each
78	53-528	Ignition rotor (gold)	32402-83	each
79	53-529	Ignition rotor screw	2611C	each
80	91-352	Ignition timing screws	32606-82	each
81	89-114	Ignition cover, Ultima w/screws		each
82	96-299A	Oil seal	83162-51	each
83	88-53	Cam cover kit	25268-84A	each
84	77-715	Gasket, cam cover	25225-70B	each
85	114-16	Cam for Ultima 96" Shovelhead, Andrews BH		each
86	98-378	Cam shim .070"	25554-36	each
	98-375	Cam shim .055"	25551-36	each
	98-376	Cam shim .060"	25552-36	each
	98-377	Cam shim .065"	25553-36	each
	98-379	Cam shim .075"	25555-36	each
	98-380	Cam shim .080"	25556-36	each
87	98-372	Washer, cam thrust	25550-57	each
88	98-359	Gear, oil pump drive	26349-73	each
89	98-305	Woodruff key	23985-54	each
90	98-89	Pinion gear spacer	24703-54B	each
91	98-588	Gear, pinion Red	24043-78	each
	98-585	Gear, pinion Orange	24040-78	each
	98-586	Gear, pinion White	24041-78	each
	98-587	Gear, pinion Yellow	24042-78	each
	98-589	Gear, pinion Blue	24044-78	each
	98-590	Gear, pinion Green	24045-78	each
	98-591	Gear, pinion Black	24046-78	each
92	98-358	Gear, oil pump driven	26345-73	each
93	98-512	Breather gear std.	25313-77	each
	98-812	Breather gear +.030" 77 & ltr	25313-77	each
94	98-80	Breather gear shim .110" 79 & ltr	25313-77A	each
	98-81	Breather gear shim .115" 79 & ltr	25321-79	each
	98-82	Breather gear shim .120" 79 & ltr	25322-79	each
	98-83	Breather gear shim .125" 79 & ltr	25323-79	each
95	98-302	Nut, pinion	24023-54	each
96	40-614	Bolt kit for Ultima cam cvr. Chrome		kit
97	91-605	Hydraulic tappet		
	91-805	Hydraulic tappet body		each
98	77-713	Front tappet guide gasket		each
	77-712	Rear tappet guide gasket		each
99	91-638	Tappet guide set, chrome		set
100	91-891	Pushrod set		set
101	91-331	Pushrod cover assy. Chrome		set
102	95-701	O-ring Pushrod cover upper & lower	11101	each
103	95-241	O-ring Pushrod cover middle	11132	each
104	98-517	Oil pump complete H.O. 92 & ltr polished		each
	98-520	Oil pump complete H.O. 92 & ltr black		each
105	98-576	Crankshaft assy. 4.625" stroke .927" wristpin		assy.
106	93-144	Ultima Shovelhead piston set std. bore .927 pin		set
	93-145	Ultima Shovelhead piston set +.005" bore .927 pin		set

Every attempt has been made to insure proper fitment of our parts for the applications listed in this guide. It is the end users responsibility to exercise good judgement in the part selection, installation & maintenance of their motor when installing parts referred to in this reference guide. Midwest MC Supply has no control over the judgement of others & assumes no responsibility or liability of any nature for the failure of others to use good judgement.

HARLEY DAVIDSON® 74 & 80 C.I. SHOVELHEAD®

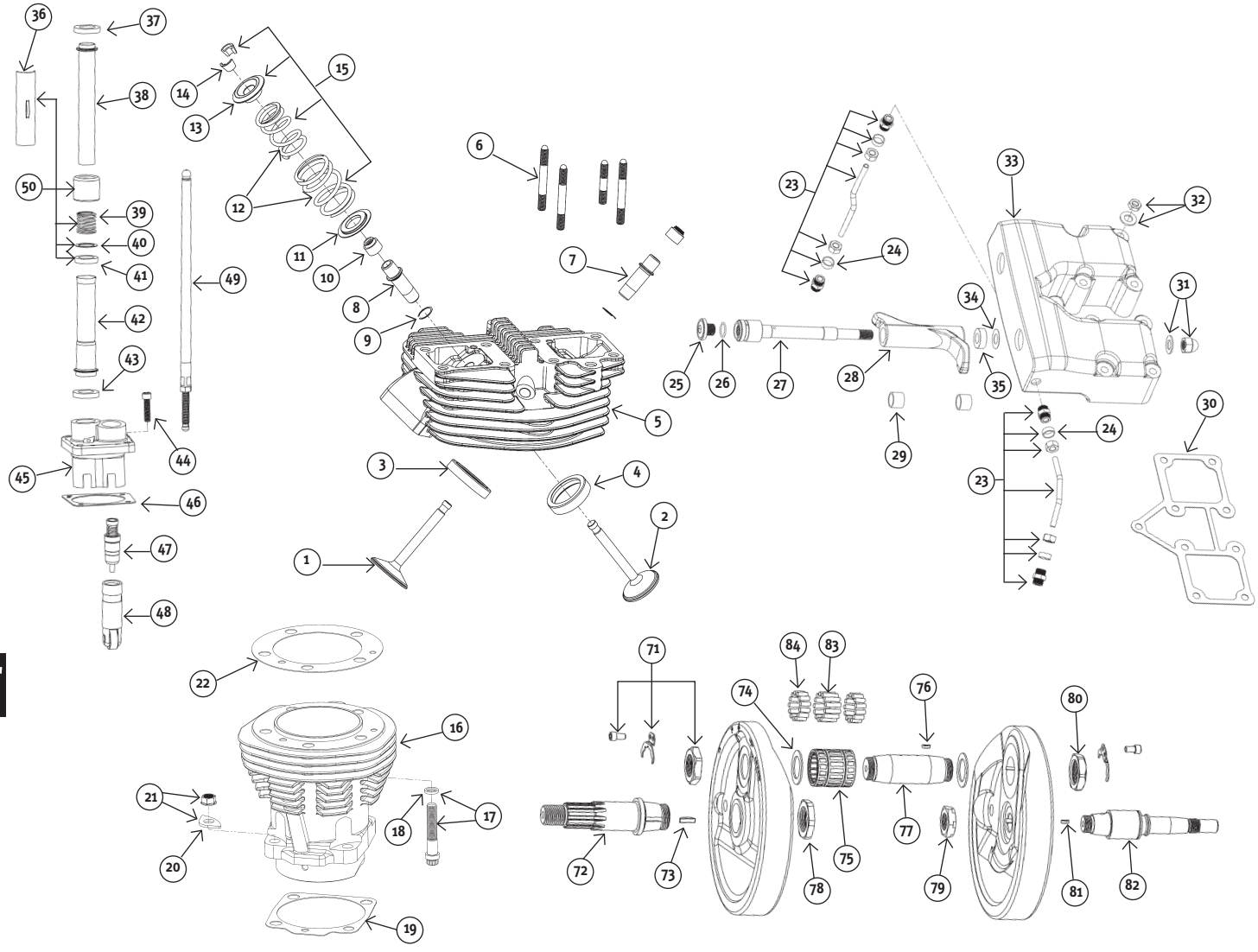

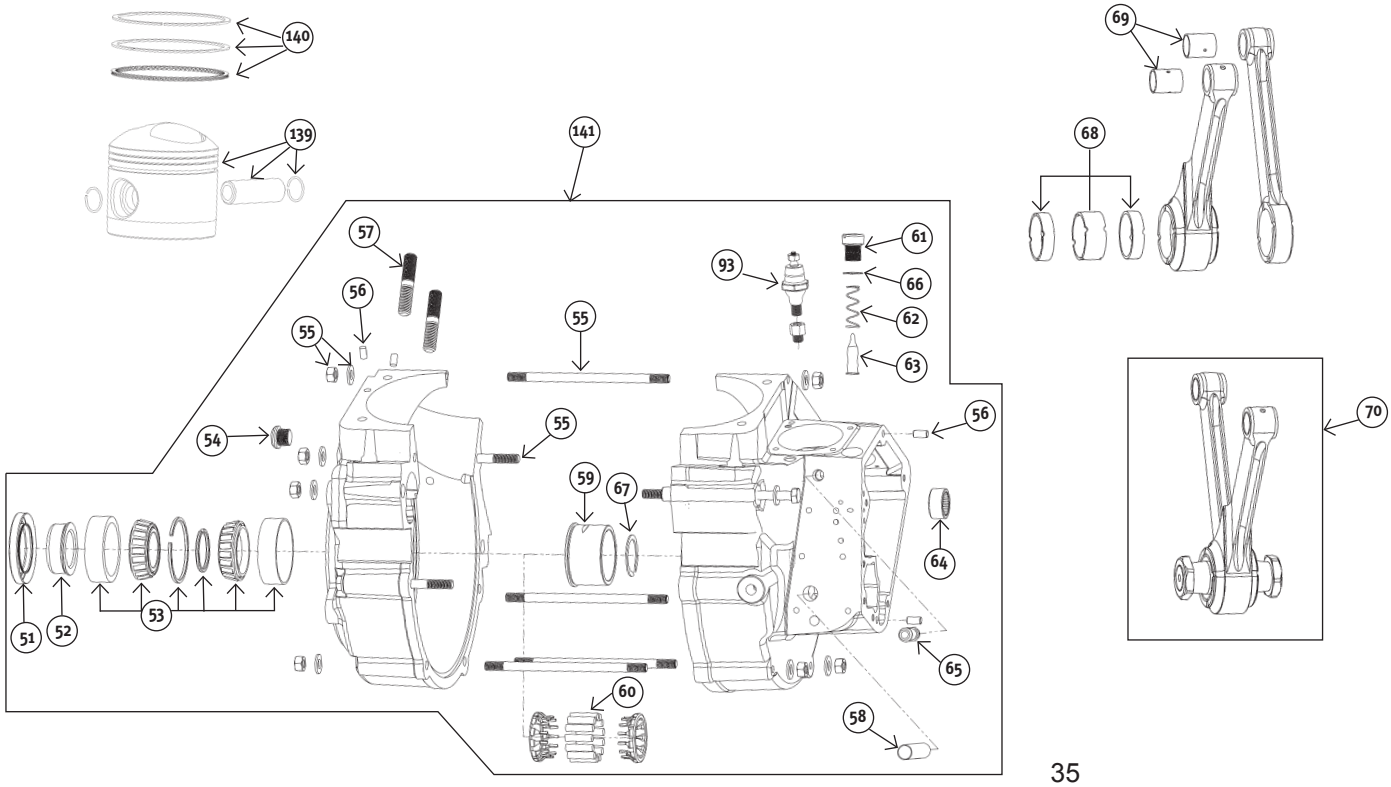

HARLEY DAVIDSON® 74 & 80 C.I. SHOVELHEAD®

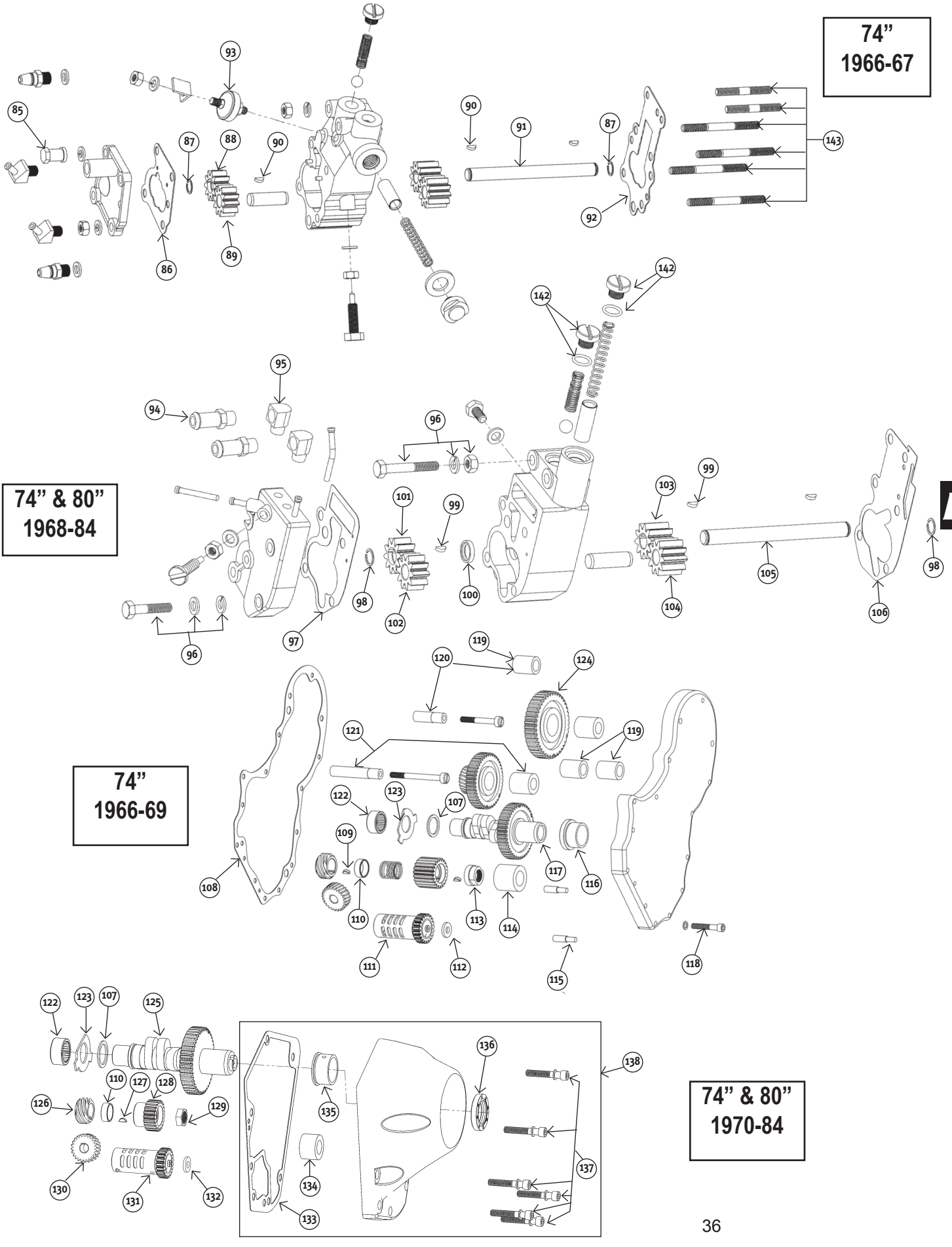

HARLEY DAVIDSON® 74 & 80 C.I. SHOVELHEAD®

#	PART#	DESCRIPTION	OEM#	QTY
1	91-180	Valve, intake 66-84 stock replacement	18074-66	each
2	91-137	Valve, exhaust 48-83 stock replacement	18082-57	each
3	91-684	Valve seat, int. 66-84 2164" OD, 1.750" ID, .453" Tall Unleaded		each
	91-685	Valve seat, int. 66-84 2.194" OD, 1.800" ID, .453" Tall Unleaded		each
4	91-687	Valve seat, exh. 66-84 2.007" OD, 1.562" ID, .453" Tall Unleaded		each
	91-682	Valve seat, exh. 66-84 2.016" OD, 1.625" ID, .453" Tall Unleaded		each
5	93-130	Front cylinder head 74" & 80" natural, stock bore, complete		each
	93-131	Rear cylinder head 74" & 80" natural, stock bore, complete		each
	93-130M	Front cylinder head 74" & 80" natural, stock bore, bare		each
	93-131M	Rear cylinder head 74" & 80" natural, stock bore, bare		each
6	91-688	Rocker box stud kit 66-84 8 long, 2 short, 1 motor mt.		kit
7	91-372	Valve guide 74" 48-79 intake std.		each
	91-373	Valve guide 74" 48-79 intake +.001"		each
	91-374	Valve guide 74" 48-79 intake +.002"		each
	91-375	Valve guide 74" 48-79 intake +.003"		each
	91-376	Valve guide 74" 48-79 intake +.004"		each
	91-377	Valve guide 74" 48-79 intake +.006"		each
	91-355	Valve guide 80" 80-84 intake std.		each
	91-234	Valve guide 80" 80-84 intake +.001		each
	91-357	Valve guide 80" 80-84 intake +.002		each
	91-359	Valve guide 80" 80-84 intake +.003		each
	91-384	Valve guide 80" 80-84 intake +.004		each
	91-385	Valve guide 80" 80-84 intake +.006		each
8	91-378	Valve guide 74" 48-79 exhaust std.		each
	91-379	Valve guide 74" 48-79 exhaust +.001"		each
	91-380	Valve guide 74" 48-79 exhaust +.002"		each
	91-381	Valve guide 74" 48-79 exhaust +.003"		each
	91-382	Valve guide 74" 48-79 exhaust +.004"		each
	91-383	Valve guide 74" 48-79 exhaust +.006"		each
	91-356	Valve guide 80" 80-84 exhaust std.		each
	91-237	Valve guide 80" 80-84 exhaust +.001		each
	91-380	Valve guide 80" 80-84 exhaust +.002		each
	91-381	Valve guide 80" 80-84 exhaust +.003		each
	91-382	Valve guide 80" 80-84 exhaust +.004		each
	91-383	Valve guide 80" 80-84 exhaust +.006		each
9	78-370	Valve guide gasket	18196-51	pkg 5
10	91-342	Valve seal & sleeve 48-81		each
	91-341	Valve seal & sleeve 81 & ltr.		each
11	91-657	Lower collar 48-79 stock spring travel		set
	91-658	Lower collar 48-79 +.030" spring travel		set
12	91-224	Valve spring set 66-84 4 inner & 4 outer		set
13	91-269	Top valve collars 66-84 set of 4		set
14	91-244	Valve keepers 74" & 80"	18228-36	set
15	91-535	Valve spring kit w/titanium top collars .465" lift		kit
	91-652	Valve spring kit w/steel top collars .465" lift		kit
16	93-270	Front cylinder 74" black stk. bore stk. height		each
	93-271	Rear cylinder 74" black stk. bore stk. height		each
	93-268	Front cylinder 80" black stk. bore stk. height		each
	93-269	Rear cylinder 80" black stk.bore stk. height		each
	93-261	Front cylinder black 3-5/8 bore stk. height		each
	93-262	Rear cylinder black 3-5/8 bore stk. height		each
	93-263	Front cylinder black 3-5/8 bore +.200" taller		each
	93-264	Rear cylinder black 3-5/8 bore +.200" taller		each
17	93-421	Head bolt & washer kit, cad plated 48-84	6469	kit
18	41-398	Head bolt washer heat treated, cad plated		set
19	78-33	Cylinder base gasket front 66-84 74" or 80"	16776-63	each
	78-51	Cylinder base gasket rear 66-84 74" or 80"	16777-63	each
	78-636	Cylinder base gasket Ft & Rr 66-84 74" or 80" .020" Viton		pair
20	41-994	Cyl. Base stud spacer 78-84	16836-78	set
21	41-401	Base nut & washer set chrome 16 pce set		set
22	78-61	Head gasket Ft & Rr 66-84 74" & 80" teflon	16770-66	each
	78-639	Head gasket Ft & Rr 66-84 74" & 80" copper .032" Cometic		pair
23	71-137	Rocker cover & feed oil lines. 66-84		kit
24	95-127	Oil line sleeve/O-ring	63529-57	each
25	41-426	Allen rocker plug set 71-84		pkg 4
	41-896	Allen rocker plug set 71-84		kit
26	95-701	O-ring	11101	each
27	91-287	Rocker arm shaft	17611-66A	each
28	91-313	Rear exh./front int. rocker arm	17360-66	each
	91-314	Front exh./rear int. rocker arm	17375-66	each
29	95-356	Bushing	17428-57	each
30	78-632	Rocker cover gasket 66-84 .020" viton coated (Cometic)		pkg 2
	78-368	Rocker cover gasket 66-84 .031" fiber (Cometic)		pkg 10
31	41-420	Rocker shaft nuts red cap 7/16-20 66-84	7872	each
	41-418	Rocker shaft nuts chrome hex 7/16-20 66-84	7872	kit
32	40-318	Chrome rocker cover hdwre kit 66-84 18 hex nuts/18 flat wshers	7753 6016	kit
	40-547	Stainless rocker cover hdwre kit 66-84 18 hex nuts/18 flat wshers		kit
33	89-344	Rocker arm covers chrome 66-84 includes chrome spacers		set
	89-389	Rocker arm covers polished 66-84 includes chrome spacers		set
34	91-277	Rocker arm shim .005"		each
	91-469	Rocker arm shim .010"		each
	91-470	Rocker arm shim .020"		each
35	91-549	Rocker arm spacer	17452-66	each
36	91-328	Pushrod retainer	17950-66	each
37	95-701	O-ring	11101	each
38	91-512	Upper pushrod cover 36-79		kit
	91-634	Upper pushrod cover 79-84		kit
39	91-321	Inner pushrod spring	17947-36	each
40	91-322	Inner pushrod washer	6762B	each
41	95-241	O-ring 79-84	11132	each
42	89-134	Lower pushrod cover w/necessary corks 48-79		set
	89-59	Lower pushrod cover grooved w/necessary corks		kit
43	95-435	Pushrod tube seal kit (square neoprene)		kit
	95-701	O-ring	11101	each
44	40-523	Stainless lifter base screw kit 76-99		kit
	41-768	Chrome 1/4-20 screw kit 76 & later		kit
	41-988	8 Piece chrome 1/4-20 12 point screw kit 76 & ltr		kit
	91-300	16 Piece chrome screw & washer set 1/4-24 taper screws		set
45	91-361	Black tappet guide front cylinder	18600-66B	each
	91-362	Black tappet guide rear cylinder	18610-66B	each
	91-526	Chrome tappet guide front cylinder	18600-66B	each
	91-527	Chrome tappet guide rear cylinder	18610-66B	each
	91-638	Chrome tappet guide set w/screws 1/4-20 & 1/4-24		set
46	78-373	Tappet block gasket rear 48-84 .020" fiber Cometic	18633-48D	pkg 10
	78-374	Tappet block gasket front 48-84 .020" fiber Cometic	18634-48D	pkg 10
47	91-605	Hydraulic unit 66-84	17920-53A	each
48	91-285	Hydraulic tappet 66-84	18522-53A	each
49	91-830	Pushrod 66-84		set
	91-831	Pushrod 66-84 for strokers .250" longer		set
50	89-62	Upper/outer pushrod cover kit 66-84		set
51	95-110	Oil seal, sprocket shaft 55-68	24031-55	each
	95-105	Oil seal, sprocket shaft 69-99	12026	each
	95-805	Oil seal, sprocket shaft 69-99	12026	each
52	98-360	Sprocket shaft spacer 69-99	24002-70	each
53	95-318	Timken engine case bearing 58-68	9029	each
	95-320	Timken engine case bearing 69 & ltr.	9028	each
54	98-299	Timing plug 52-69 chrome reproduction	704	each
	98-490	Timing plug 70 & ltr. chrome allen style	720	each
55	41-880	Motor case stud kit B.T. 65-69		kit
	41-881	Motor case stud kit B.T. 70-78		kit
	41-882	Motor case stud kit B.T. 79-95		kit
56	98-540	Dowel .250"x.500"		each
57	41-992	Cylinder base stud set 30-77 8 pcs.	16831-30	set
	41-993	Cylinder base stud set 78-84 8 pcs.	16837-78	set
58	300-453	Bushing, oil pump 36 & ltr	24641-36	each
59	95-310	Bearing race 58-92 std. size	24599-58	each
	95-430	Bearing race 58-92 +.002"	24600-58A	each
60	95-488	Crank case rollers std.	9220A	pkg 100
	95-489	Crank case rollers +.0002"	9221A	pkg 100
	95-490	Crank case rollers +.0004"	9222A	pkg 100
	95-491	Crank case rollers +.0006"	9223A	pkg 100
	95-492	Crank case rollers +.0008"	9224A	pkg 100
	95-493	Crank case rollers +.001"	9225A	pkg 100
	95-494	Crank case rollers +.002"	9220A	pkg 100
61	98-538	Screen plug	26263-80	each
62	98-511	Spring, crank case 70 & ltr	24982-70	each
63	98-510	Screen, crank case 70 & ltr	24981-70	each
64	95-173	Bearing, cam 66 &ltr	9058	each
65	21-123	Spigot tube	63533-41	each
66	95-703	O-ring 79-84	1105	pkg 10
67	98-266	Retaining ring 58-86	11007	each
68	95-165	Rod races set of 3 41 & ltr		set
69	95-115	Piston pin bushing std. size	24334-36	each
	95-389	Piston pin bushing +.002"		each
	95-390	Piston pin bushing +.010"		each
70	98-262	Rod assembly 41-73 74"	24281-41A	set
	98-323	Rod assembly 74-81 74" & 80"	24281-74	set
	98-413	Rod assembly 81-83 80"	24281-80	set
	98-414	Rod assembly 83 & ltr 80"	24281-83A	set
71	98-303	Crankpin nuts, locks & screws 41-81 1"-18 thread		kit
72	98-293	Sprocket shaft 65-69	24001-65	each
	98-294	Sprocket shaft 70-71	24001-70	each
	98-295	Sprocket shaft 72-81	24001-72	each
	98-339	Sprocket shaft 81-85	23909-80	each
73	94-137	Key sprocket shaft 56 & ltr	23985-56	each
74	98-271	Flywheel washer 41-70	23973-41	each
	98-298	Flywheel washer 70-ltr	6506	each
75	95-259	Roller & retainer set std. aluminum	24385-40B	kit
	95-621	Roller & retainer set std.	24346-87A	kit
76	98-273	Key 41-81	23985-18	each
	98-475	Key 81 & ltr	11218	each
77	98-255	Crank pin 74" & 80" 3 hole 41-81	23961-41	each
	98-465	Crank pin 74" & 80" 1 hole 41-81	23961-41	each
	98-419	Crank pin 81&ltr 180 degree-3 hole(use late nuts 1"-20 thread)	23961-80	each
78	98-424	Sprocket shaft nut 30-81 3/4"-18	24023-36	each
	98-423	Sprocket shaft nut 81-85 1-1/8"-16	24017-80	each

Drive Train Transmissions Belt Drives, Chains



DRIVE TRAIN PARTS:
TRANSMISSION, SHIFTER,
KICKSTARTER, CLUTCH,
DRIVE CHAIN,
CHAIN ADJUSTER, SPROCKETS,
BELT DRIVES, CHAIN COVERS,
CHAIN GUARDS, BELT GUARDS,
& ALL THE RELATED PARTS

ULTIMA® 6-SPEED RIGHT SIDE DRIVE TRANSMISSIONS

ULTIMA 6 RSD

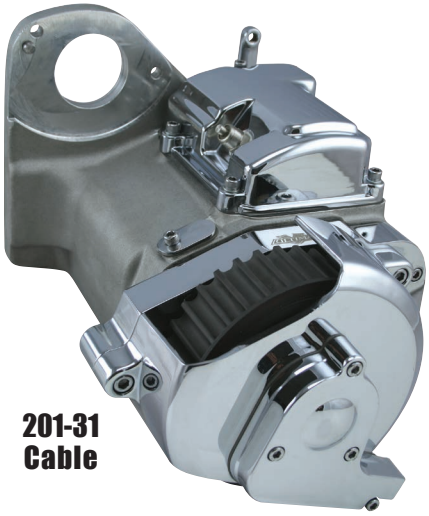

201-31
Cable



201-32
Cable

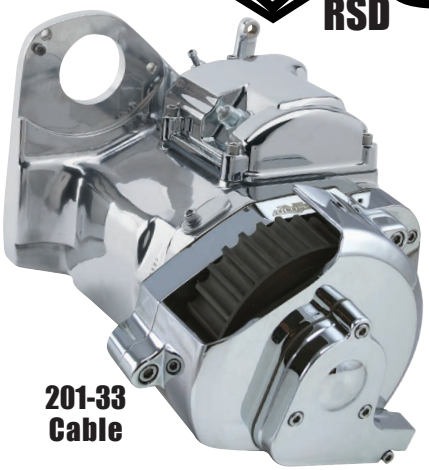

201-33
Cable



201-34
Hydraulic



201-35
Hydraulic



201-36
Hydraulic

7

Ultima's Direct Drive RSD transmission offers you quality and value found only in Ultima products. This transmission will handle any of the high horsepower engines we've created and are offered in our drive train packages. These transmission are available in both cable type operated clutch and hydraulic operated clutch styles and both are delivered with a 12 month, 12,000 mile warranty.
*Instructions included and available online @ www.ultimaproducts.com.

201-31	Cast Finish, Cable	**201-34**	Cast Finish, Hydraulic
201-32	Black Finish, Cable	**201-35**	Black Finish, Hydraulic
201-33	Polished Finish, Cable	**201-36**	Polished Finish, Hydraulic

12 MONTH/12,000 MILE LIMITED WARRANTY FROM DATE OF MIDWEST INVOICE TO THE DEALER.

NOTE1: ORDER CLUTCH PUSHROD MW#96-442 (11.375") OR 96-538 (10.8125").
NOTE2: HYDRAULIC TRANSMISSIONS REQUIRE 3/8-24 BANJO BOLT WITH 10mm BANJO FITTINGS AND WASHERS.

FEATURES INCLUDE:

- GEARS AND SHAFT MADE FROM 8620 STEEL FOR DURABILITY
- PRO-CUT LEAD IN RAMPS FOR POSITIVE SHIFTING
- HARDENED STEEL SHIFT FORKS FOR DURABILITY
- ROLLER DETENT FOR ULTRA SMOOTH SHIFTING
- BILLET TRAP DOOR
- PERMANENT MOLD TRANSMISSION CASE MACHINED FROM A356-T6
- CLOSE RATIO 2.94 LOW GEAR SET
- .86 OVERDRIVE 6TH GEAR
- DESIGNED TO USE OEM STYLE SPEEDOMETER SENSORS
- ASSEMBLED BY PROFESSIONALS.
- 32 TOOTH PULLEY INCLUDED.

ULTIMA® 6-SPEED RSD TRANSMISSION - GEAR TRAIN

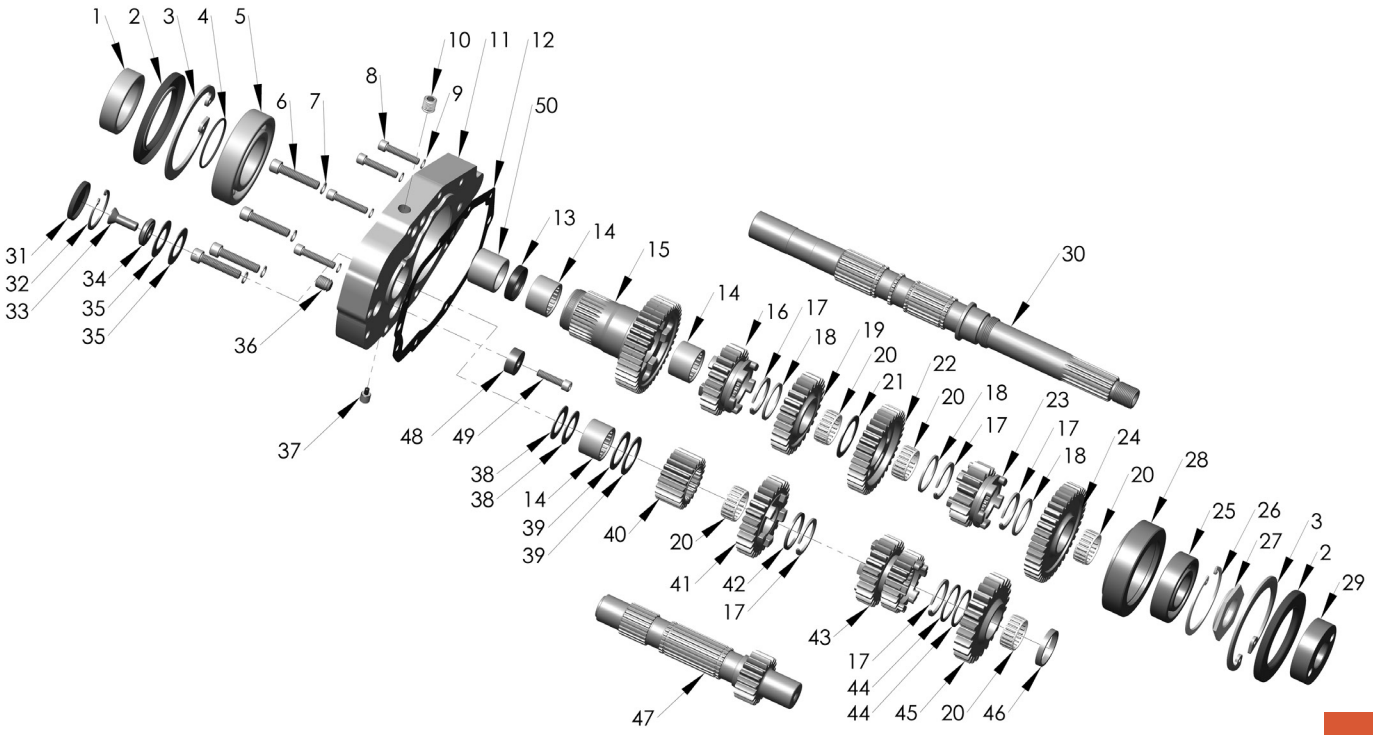

7

Item Number	Part Number	Description	Quantity
1	**96-826**	Steel Insert	1
2	**95-791**	Transmission Seal	2
3	**95-433**	Retaining Ring	2
4	**95-717**	O-ring/quad-seal	1
5	**95-432**	Bearing	1
6	**96-948**	Bolt, SHCS 5/16-18 x 1-1/2"	4
7	**96-949**	Washer	4
8	**96-946**	Bolt, SHCS 1/4-20 x 1-1/4"	4
9	**96-947**	Washer	4
10	**96-724**	Set Screw, chrome-plated	1
11	**96-729**	Trap Door, RSD 6-Speed	1
12	**78-452**	Gasket, Trap Door, pkg of 10	1
	78-452A	Gasket, Trap Door, sold each	1
13	**95-793**	Seal	1
14	**96-609**	Needle Bearing	3
15	**96-732**	Fifth Gear, Main Shaft	1
16	**96-733**	Second Gear, Main Shaft	1
17	**96-621**	Retaining Ring (OEM 11067)	5
18	**96-659**	Thrust Washer	3
19	**96-734**	Third Gear, Main Shaft	1
20	**96-608**	Needle Bearing	5
21	**96-735**	Thrust Washer	1
22	**96-736**	Fourth Gear, Main Shaft	1
23	**96-737**	First Gear, Main Shaft	1
24	**96-738**	Sixth Gear, Main Shaft	1
25	**96-739**	Bearing	1

Item Number	Part Number	Description	Quantity
26	**96-740**	Retaining Ring	1
27	**96-741**	Main Shaft Nut	1
28	**96-742**	Mainshaft Insert for Bearing 6206	1
29	**96-743**	Insert	1
30	**96-744**	Main Shaft, Transmission	1
31	**96-746**	Dust Cover	1
32	**96-747**	Retaining Ring	1
33	**96-748**	Screw	1
34	**96-749**	Spacer	1
35	**96-778**	Washer	2
36	**96-829**	Set Screw, chrome-plated	1
37	**41-167**	Drain Plug, Magnetic	1
38	**96-830**	Thrust Washer	2
39	**96-835**	Thrust Washer	2
40	**96-836**	Fifth Gear, Counter Shaft	1
41	**96-837**	Second Gear, Counter Shaft	1
42	**96-659**	Thrust Washer	1
43	**96-854**	Third & Fourth Gear, Counter Shaft	1
44	**96-856**	Thrust Washer	2
45	**96-857**	First Gear, Counter Shaft	1
46	**96-858**	Spacer	1
47	**96-859**	Counter Shaft & Sixth Gear	1
48	**96-863**	Magnet, Ring-shape	1
49	**96-872**	Screw, Support Magnet	1
50	**95-451**	Inner Bushing for Bearing 652205	1

ULTIMA® 6-SPEED RSD TRANSMISSION - COVERS

Item Number	Part Number	Description	Quantity
1	**95-434**	Bearing, Left Side Counter Shaft (OEM 8977)	1
2	**298-106**	Transmission Case w/speedo hole -Casting	1
	298-105	Transmission Case w/speedo hole -Black	1
	298-113	Transmission Case w/speedo hole -Polish	1
3	**96-775**	Pin, Alignment (OEM 337)	1
4	**21-304**	Vent Fitting, Chrome (OEM 62375-57)	1
5	**96-563**	Top Cover, Transmission (OEM 34468-86A)	1
6	**96-780**	Bolt, SHCS 1/4-20 x 2-1/2" (OEM 4717A)	1
7	**96-781**	Bolt, SHCS 1/4-20 x 1" (OEM 4741A)	4
8	**96-952**	Washer (0.410" OD., 0.250" ID.)	9
9	**17-72**	Neutral Light Switch, Single Post (OEM 33900-59)	1
	17-701	Neutral Light Switch, Dual Post, Silver (OEM 33902-98)	
	17-702	Neutral Light Switch, Dual Post, Black (OEM 33904-00)	
	17-703	Neutral Light Switch, Single Post (OEM 33901-79)	
10	**96-754**	Washer (OEM 33043-80)	1
11	**78-461**	Gasket, Top Cover (34904-86), pkg of 10	1
	78-461A	Gasket, Top Cover (34904-86), sold each	1
12	**96-750**	Split Pin (OEM 609)	4
13	**96-949**	Washer (0.480" OD., 0.320" ID.)	3
14	**40-210**	Bolt, SHCS 5/16-18 x 1"	3
15	**98-940**	PushRod, Clutch Release, Right (6 speed RSD trans only)	1
16	**96-451**	Throw-Out Bearing Assembly (OEM 37312-75, 37313-80)	1
17	**96-452**	Retaining Ring (OEM 11096)	1
18	**96-893**	Inner Ramp, Clutch Release	1
19	**96-783**	Steel Balls, Clutch Release	3
20	**96-785**	Outer Ramp, Clutch Release	1
21	**96-894**	Gasket, Clutch Release Cover	1
22	**96-905**	Cover, Clutch Release	1
23	**96-946**	Bolt, SHCS 1/4-20 x 1-1/4	4
24	**96-788**	Coupling, Clutch Release	1
25	**96-907**	Pulley Cover	1
26	**98-925**	Screw, Button Head, 1/4-20 x 5/8" (OEM 3594)	2
27,26	**94-381**	Nut Kit includes nut, lock and two bolts (OEM 35211-91, 40251-91, 3594)	1
28, 27, 26	**94-378**	Pulley, 32T includes nut lock combo and two bolts	1
29		PushRod, Clutch Release, Center (see pushrods for sizes)(not included)	1
30	**96-777**	Pin, Alignment (OEM 634)	1
31	**96-776**	Pin, Alignment (OEM 375)	1
32	**96-773**	Stud, Transmission Case (OEM 11733)	5
33	**98-929**	Bolt, SHCS 1/4-20 x 7/8"	1
34	**98-930**	Cover Plate, Speedo Hole	1
35	**98-931**	Gasket, Cover Plate	1
36	**96-909**	oil seal for pulley cover	1
37	**96-924**	Retaining Ring for end cover	1
38	**96-669**	Throwout rod/bearing assembly (RSD trans only)	1

ULTIMA® 6-SPEED RSD TRANSMISSION - COVERS

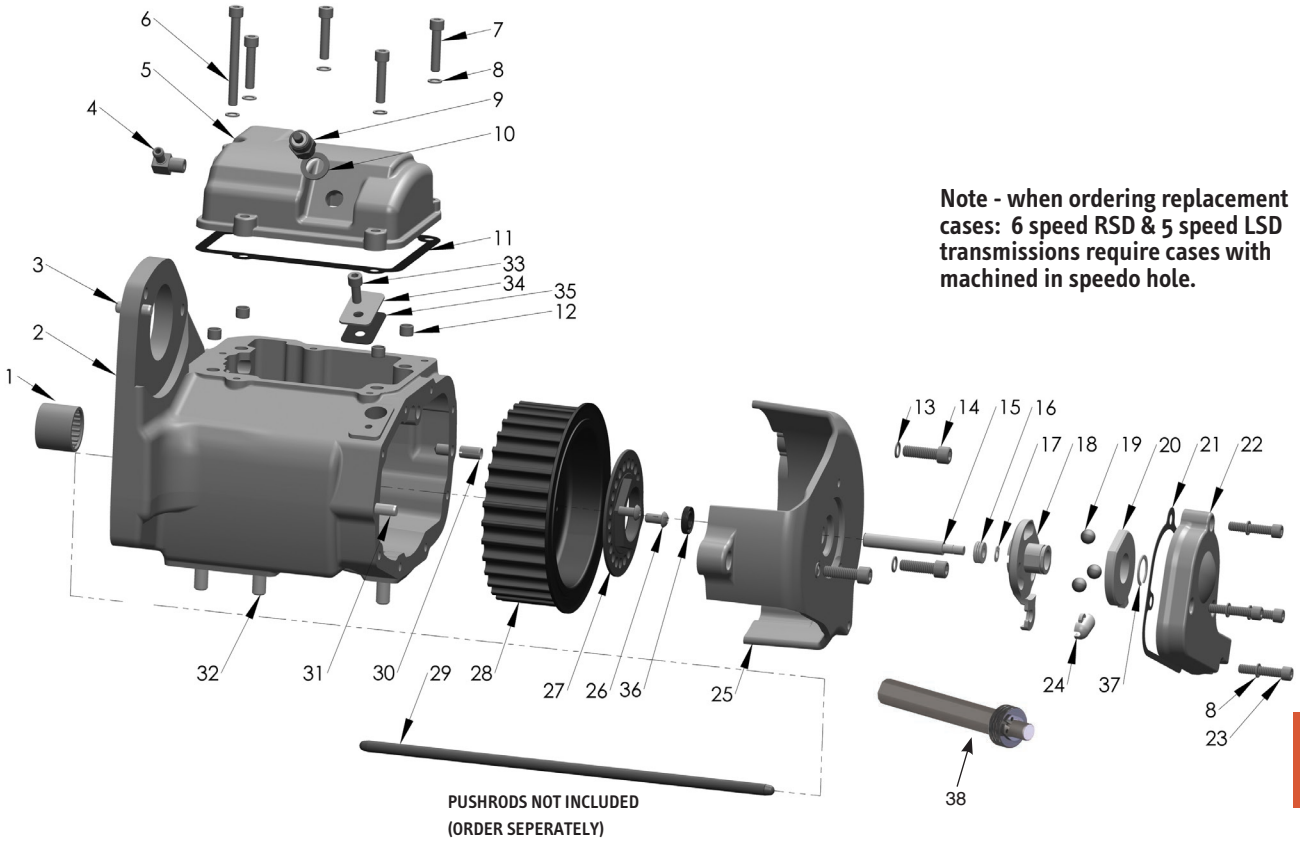

Note - when ordering replacement cases: 6 speed RSD & 5 speed LSD transmissions require cases with machined in speedo hole.

ULTIMA® RSD CLUTCH COVER ASSEMBLY

Replacement cover for use on all Ultima right side drive transmissions and most aftermarket right side drive transmissions. Includes 3 mounting bolts.

96-959 RSD Cable type clutch cover assembly
96-960 RSD Hydraulic clutch cover assembly



96-959



96-960

ULTIMA® 6-SPEED RSD TRANSMISSION - SHIFT MECHANISM

Item Number	Part Number	Description	Quantity
1	**96-759**	Retaining Ring, Shift Drum (OEM 11083)	1
2	**96-761**	0.017" Thick Thrust Washer (OEM 33205-80)	1
	96-762	0.020" Thick Thrust Washer (OEM 33206-80)	
	96-763	0.022" Thick Thrust Washer (OEM 33207-80)	
	96-764	0.025" Thick Thrust Washer (OEM 33208-80)	
	96-765	0.028" Thick Thrust Washer (OEM 33209-80)	
	96-766	0.031" Thick Thrust Washer (OEM 33210-80)	
	96-767	0.035" Thick Thrust Washer (OEM 33211-80)	
	96-768	0.039" Thick Thrust Washer (OEM 33212-80)	
3	**96-791**	Bolt, Hex head, 1/4-20 x 1-1/4" (OEM 3993)	4
4	**96-758**	Washer, Pillow Blocks (OEM 6736)	4
5	**96-705**	Shifter Drum Bearing, Right	1
6, 5	**96-708**	Pillow Block Assembly	1
7	**96-723**	Shift Cam/ Shift Drum	1
8, 9	**96-696**	Support with Bearing	1
9	**95-600**	Shifter Drum Bearing, Left	1
10	**96-638**	Shaft, Shift Fork	1
11	**96-961**	Shift Fork, Second Gear, Main Shaft	1
12	**96-962**	Shift Fork, Third & Fourth Gear, Counter Shaft	1
13	**96-887**	Shift Fork, First Gear, Main Shaft	1
14	**96-790**	Set Screw, 1/2-20, black oxided	1
	98-927	Set Screw, 1/2-20, Chrome plated	1
15	**96-674**	Lever Assembly, Shift Pawl	1
16	**96-774**	Retaining Ring (OEM 11016)	1
17	**96-751**	Washer (OEM 6016)	1
18	**96-704**	Shift Pawl (OEM 34086-79)	1
19	**96-630**	Shifter Shaft/Lever (OEM 34084-86)	1
20	**96-769**	Spring (OEM 34083-79)	1
21	**96-702**	Pin (OEM 34082-79)	1
22	**96-703**	Plate, Adjustment (OEM 35068-79)	1
23	**96-770**	Spring (OEM 34087-79A)	1
24	**96-680**	Adjustment Screw (OEM 33119-79B)	1
25	**96-681**	Jam Nut, Adjuster (OEM 7515)	1
26	**96-941**	Bolt, SHCS 5/16-24 x 1"	1
27	**96-652**	Chrome Shift Rod Lever (OEM 33715-85)	1
28	**96-755**	Bushing, Shift Shaft (OEM 33114-79)	1
29	**95-787**	Seal, Shifter Shaft (OEM 12045) Package of 5	5
	95-787A	Seal, Shifter Shaft (OEM 12045) Each	1
30	**96-757**	Washer, Inner Shift Lever (OEM 6497HW)	1
31	**96-760**	Retaining Ring, Inner Shift Lever (OEM 11150)	1

ULTIMA® 6-SPEED RSD TRANSMISSION - SHIFT MECHANISM

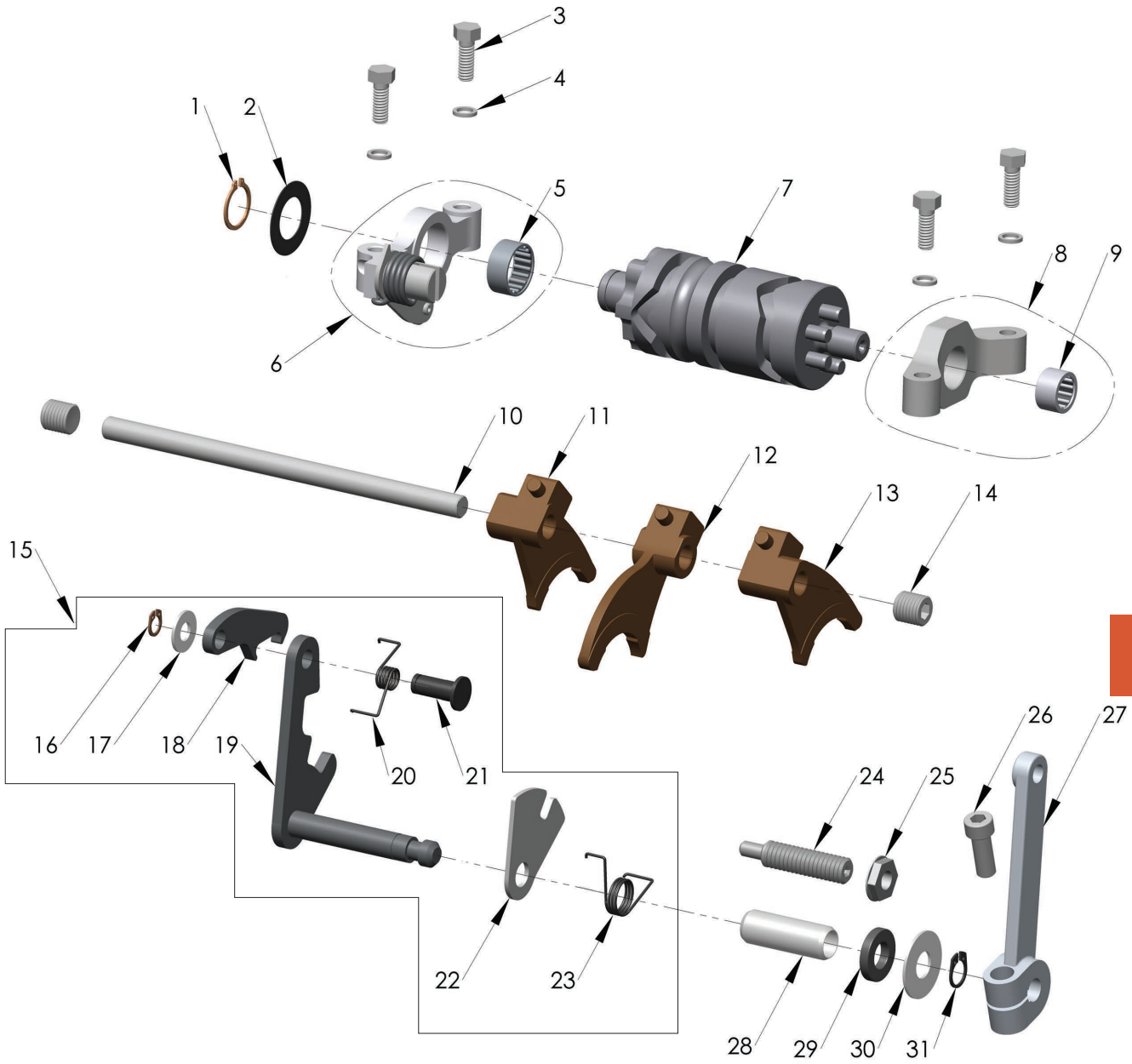

ULTIMA® 6-SPEED TRANSMISSIONS

ULTIMA 6 LSD



201-57

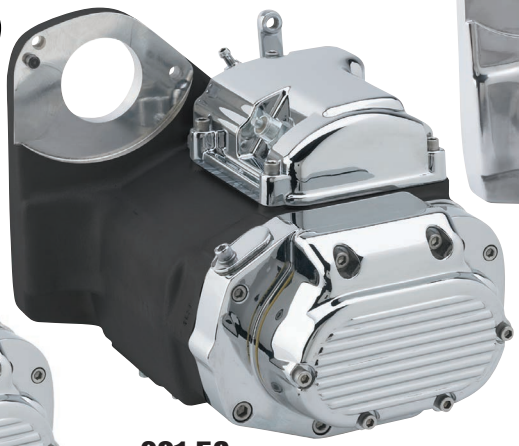

201-58

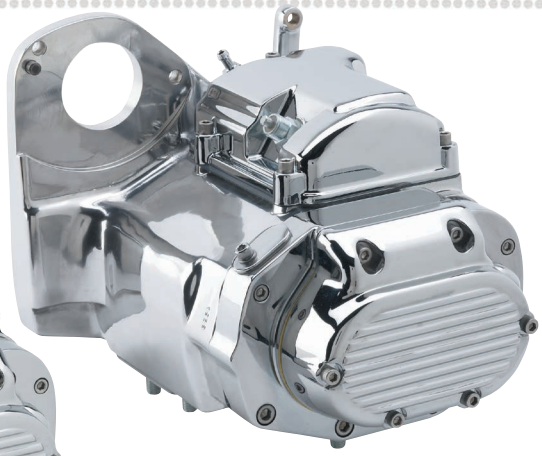

201-59

ULTIMA KICKER



201-70

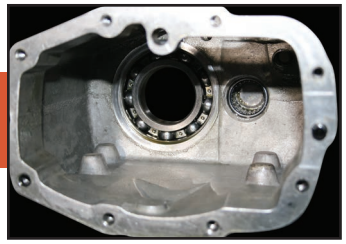

LEAK-FREE STUDS

- Gear Ratios are:
  1. 2.94: 1
  2. 2.21: 1
  3. 1.57: 1
  4. 1.23: 1
  5. 1: 1
  6. .86: 1

7

Ultima's® 6-SPEED Transmissions (offered with or w/o kicker) are the ultimate upgrade for bikes with 100+ horsepower engines. Designed to compliment our El Bruto® series engines, or any high horsepower unit you've created. They are packed with new features that meet or exceed standards expected of much higher priced transmissions and are delivered with a 12 month/12,000 mile limited warranty. *Instructions included and available online @ www.ultimaproducts.com.

FEATURES INCLUDE:

- ★ **Gears and shafts made from hardened 8620 steel giving you years of service with big inch engines.**
- ★ **Pro-cut lead-in ramps for positive shifting.**
- ★ **Hardened steel shift forks for durability and longevity.**
- ★ **Roller detent gives you smooth, positive shifting action.**
- ★ **Billet trap door.**
- ★ **Reinforced transmission case machined from permanent mold A356-T6 aluminum.**
- ★ **Close ratio 2.94 low gear set.**
- ★ **Assembled by professionals and bench tested.**
- ★ **Blind stud holes (no leaks).**
- ★ **Improved spring material composition.**
- ★ **Cable operated clutch release.**
- ★ **Designed to use OEM style speedometer sensors.**
- ★ **32 tooth pulley included.**

Fits Softail® models 91-99' and custom applications.

W/O KICKER		WITH KICKER	
201-57	Cast	**201-70**	Cast
201-58	Black	**201-71**	Black
201-59	Polished	**201-72**	Polished

Ultima® LSD 5 & 6 Speed Gasket/Seal Rebuild Kit

95-1 For 201-57, 201-58, 201 59 & 201-45, 201-49, 201-50

12 MONTH/12,000 MILE LIMITED WARRANTY FROM DATE OF MIDWEST INVOICE TO THE DEALER.

NOTE: ORDER CLUTCH PUSHROD **MW#96-442 (11.375") or #96-538 (10.8125").**

ULTIMA® 6-SPEED TRANSMISSIONS- GEAR TRAIN

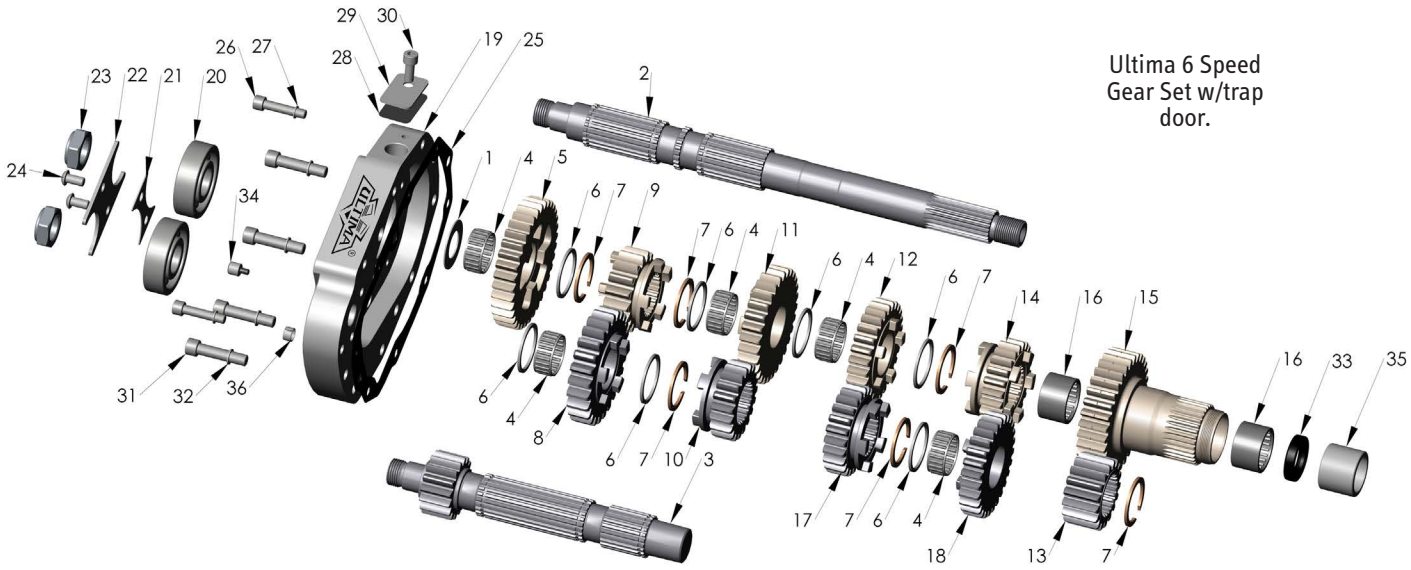

Item Number	Part Number	Description	Quantity
1	**98-941**	Thrust Washer	1
2	**98-919**	Main Shaft, Transmission	1
3	**98-911**	Counter Shaft Unit and Sixth Gear, 16 teeth	1
4	**96-608**	Roller Bearing (OEM 8876A)	5
5	**98-913**	Sixth Gear, 35 teeth, Main Shaft	1
6	**96-659**	Thrust Washer, Main Shaft and Counter Shaft (OEM 6003)	7
7	**96-621**	Retaining Ring, Main Shaft and Counter Shaft (OEM 11067)	6
8	**98-909**	First Gear, 25 teeth, Counter Shaft	1
9	**98-918**	First Gear, 16 teeth, Main Shaft	1
10	**96-942**	Fourth Gear, 19 teeth, Counter Shaft	1
11	**96-943**	Fourth Gear, 29 teeth, Main Shaft	1
12	**96-944**	Third Gear, Main Shaft, 27 teeth	1
13	**98-906**	Fifth Gear, 17 teeth, Counter Shaft (OEM 35626-79A)	1
14	**96-945**	Second Gear, Main Shaft, 23 teeth	1
15	**98-914**	Main Drive/Fifth Gear, 32 teeth, Main Shaft (OEM 35029-91), includes # 16, 33	1
16	**96-609**	Bearing (OEM 35051-89)	2
17	**98-908**	Third Gear, Counter Shaft, 23 teeth	1
18	**98-910**	Second Gear, Counter Shaft, 27 teeth	1
19	**98-920**	Trap Door, Six Speed	1
20	**98-921**	Bearing, Trap Door	2
21	**98-928**	Spacer	1
22	**98-922**	Retainer Plate	1
23	**96-683**	Locknut, Main Shaft and Counter Shaft	2
24	**98-925**	Button Head Screw, Bearing Retainer	2
25	**78-452**	Gasket, Trap Door (OEM 35652-79), pkg of 10	1
	78-452A	Gasket, Trap Door (OEM 35652-79), sold each	1
26	**96-946**	Bolt, SHCS 1/4-20 x 1-1/4”	2
27	**96-947**	Washer (0.355” OD., 0.250” ID.)	2
28	**98-931**	Gasket, Speedo Hole Cover Plate	1
29	**98-930**	Cover Plate, Speedo Hole	1
30	**98-929**	Screw, SHCS 1/4-20 x 7/16”	1
31	**96-948**	Bolt, SHCS 5/16-18 x 1-1/2”	4
32	**96-949**	Washer (0.475” OD., 0.3125” ID.)	4
33	**95-793**	Oil Seal, Gear End (OEM 12035A)	1
34	**41-167**	Drain Plug, Magnetic (OEM 739A)	1
35	**95-451**	Inner Race (OEM 34091-85)	1
36	**96-750**	Slip pin	1

ULTIMA® 6-SPEED TRANSMISSIONS- SHIFT MECHANISM

Item Number	Part Number	Description	Quantity
1	**98-934**	Pillow Block, Detent Assembly	1
	96-888	Pillow Block Assembly, includes #7	1
2	**95-372**	Shifter Cam Bearing (OEM 36961-52)	1
3	**98-936**	Shift Cam, Late Model, includes # 2	1
4	**98-938**	Thrust Washer, Shift Drum, 0.040"	1
	98-939	Thrust Washer, Shift Drum, 0.008"	
5	**96-791**	Bolt, Pillow Blocks, 1/4-20 x 1-1/4" (OEM 3993)	4
6	**96-758**	Washer, Pillow Blocks (OEM 6736)	4
7	**96-696**	Pillow Block (OEM 33326-79A), includes # 8	1
8	**95-600**	Shifter Cam Bearing, Left (OEM 9115)	1
9	**96-638**	Shaft, Shift Fork (OEM 34088-87)	1
10	**96-899**	Bronze Heavy Duty Replacement Shift Fork, Gear 1, Main Shaft	1
11	**96-898**	Bronze Heavy Duty Replacement Shift Fork, Gear 4, Counter Shaft	1
12	**96-699**	Steel Shift Fork, Gear 3, Counter Shaft (OEM 34191-79D)	1
13	**96-700**	Steel Shift Fork, Gear 2, Main Shaft (OEM 34193-79D)	1
14	**96-790**	Set Screw 1/2-20 x1/2 (OEM 3784), (black anodized)	1
	96-940	Set Screw 1/2-20 x1/2 (OEM 3784),(chrome-plating)	1
15	**98-937**	Shaft, Shift Fork, Gear 4	1
16	**98-923**	Guide, Shift Fork Shaft, includes # 17	1
17	**98-924**	Bolts, Button Head, M8x1.25 x 20mm	2
18	**96-674**	Lever Assembly, Shifter Pawl	1
19	**95-787**	Seal, Shifter Shaft (OEM 12045)	1
20	**96-941**	Bolt, Shift Lever 5/16-24 x1" (OEM 856A)	1
21	**96-757**	Washer, Inner Shift Lever (OEM 6497HW)	1
22	**96-760**	Retaining Ring, Inner Shift Lever (OEM 11150)	1
23	**96-652**	Chrome Shift Rod Lever (OEM 33715-85)	1
24	**96-680**	Adjusting Screw (OEM 33119-79B)	1
25	**96-681**	Jam Nut, Adjuster (OEM 7515)	1
26	**96-774**	Retaining Ring (OEM 11016)	1
27	**96-751**	Washer (OEM 6016)	1
28	**96-704**	Shift Pawl (OEM 34086-79)	1
29	**96-630**	Shifter Shaft Lever (OEM 34084-86)	1
30	**96-769**	Spring (OEM 34083-79)	1
31	**96-702**	Pin (OEM 34082-79)	1
32	**96-703**	Plate (OEM 35068-79)	1
33	**96-770**	Spring (OEM 34087-79A)	1
34	**96-755**	Bushing, Shift Shaft (OEM 33114-79) See Transmission Case page	1

ULTIMA® 6-SPEED TRANSMISSIONS- SHIFT MECHANISM

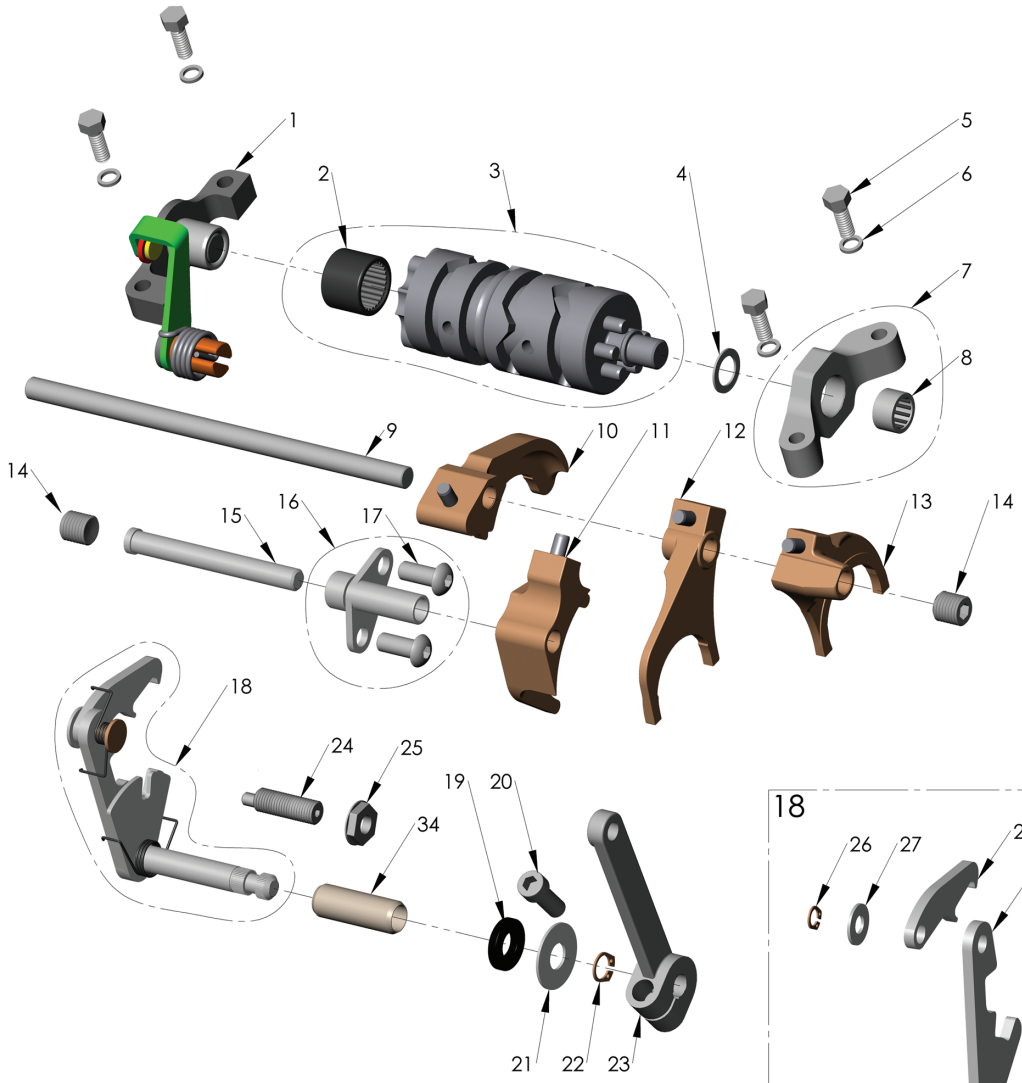

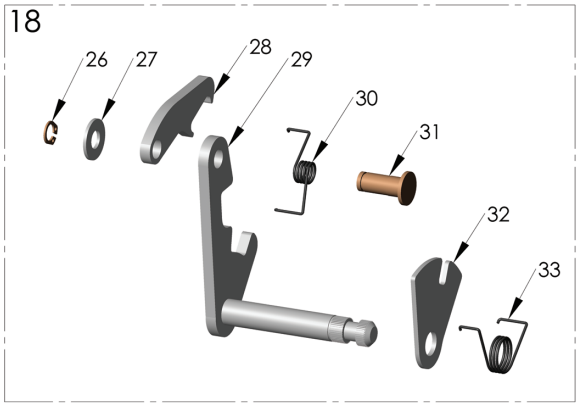

ULTIMA® 5 & 6-SPEED TRANSMISSIONS- TOP & SIDE COVERS

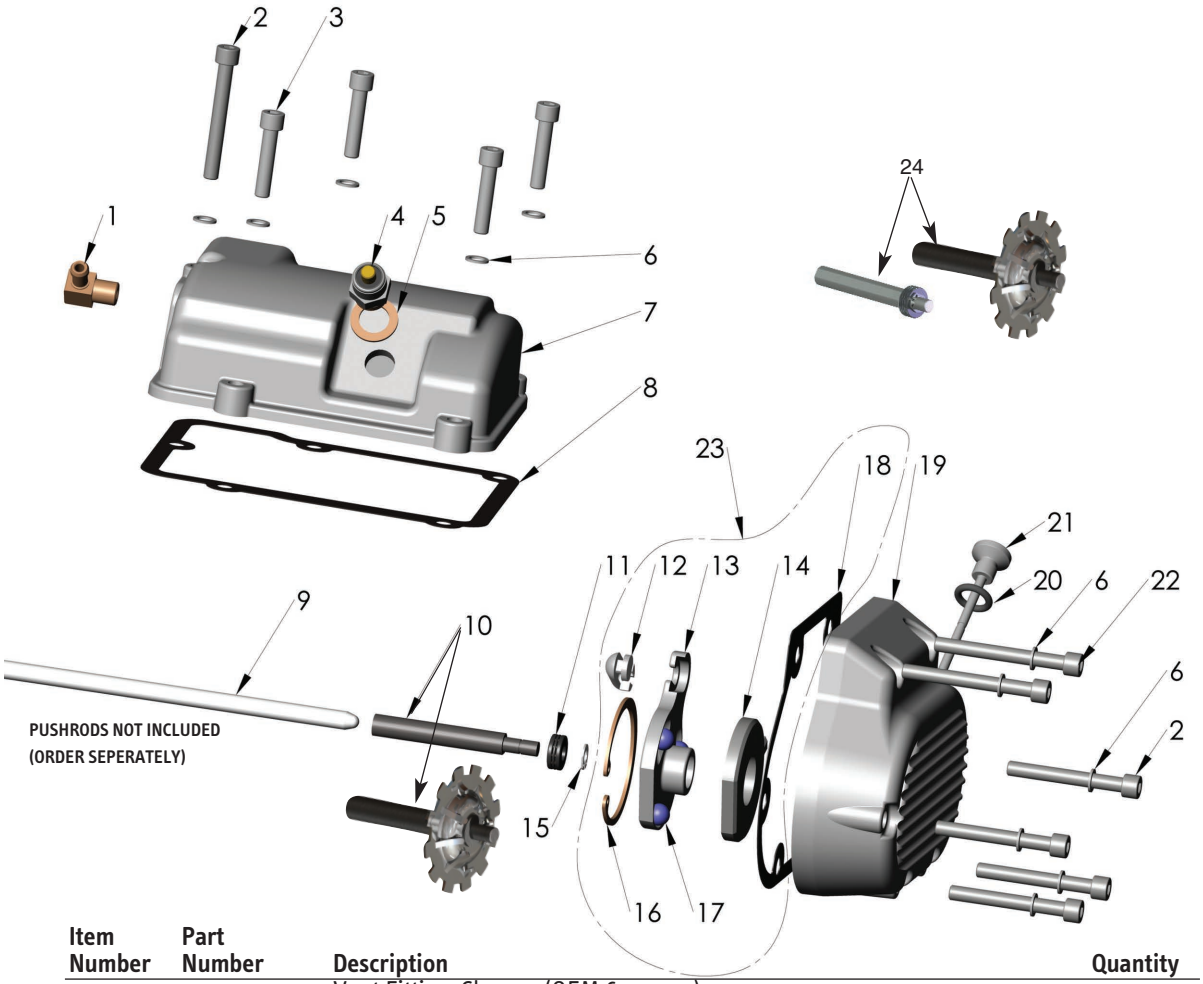

Item Number	Part Number	Description	Quantity
1	**21-304**	Vent Fitting, Chrome (OEM 62375-57)	1
2	**96-955**	Bolt, SHCS 1/4-20 x 2-1/2"	1
3	**96-951**	Bolt, SHCS 1/4-20 x 1" (OEM 4741A)	4
4	**17-72**	Neutral Light Switch ,Single Post(OEM 33900-59)	1
	17-701	Neutral Light Switch ,Dual Post, Silver(OEM 33902-98)	
	17-702	Neutral Light Switch ,Dual Post, Black(OEM 33904-00)	
	17-703	Neutral Light Switch, Single Post (OEM 33901-79)	
5	**96-754**	Washer (OEM 33043-80)	1
6	**96-952**	Washer (0.410" OD., 0.250" ID.)	11
7	**96-563**	Top Cover, Transmission (OEM 34468-86A)	1
8	**78-461**	Gasket, Top Cover (34904-86), PKG OF 10	1
	78-461A	Gasket, Top Cover (34904-86), SOLD EACH	1
9	**96-538**	Rod, Clutch Release, Center. See Pushrods for sizes (not included)	1
10	**96-654**	Rod, Clutch Release, Right, (6 speed LSD trans only)	
	96-646	Rod, Clutch Release, Right, (5 speed LSD trans only) (OEM 37069-90)	1
11	**96-451**	Throw-Out Bearing Assembly (OEM 37312-75, 37313-80)	1
12	**96-788**	Coupling (OEM 34920-86)	1
13	**96-784**	Inner Ramp (OEM 25452-87A)	1
14	**96-785**	Outer Ramp (OEM 25453-87A)	1
15	**96-452**	Retaining Ring (OEM 11096)	1
16	**96-772**	Retaining Ring (OEM 10998)	1
17	**96-783**	Steel Ball (OEM 8873)	3
18	**78-455**	Gasket, Side Cover (OEM 36801-87A), pkg of 10	1
	78-455A	Gasket, Side Cover (OEM 36801-87A), sold each	1
19	**96-554**	End Cover, Transmission, Cable (OEM 37105-87A)	1
	96-237	End Cover, Transmission, Hydraulic	1
20	**95-241**	O-ring, Dip Stick (OEM11132)	1
21	**41-285**	Dip Stick	1
22	**96-953**	Bolt, SHCS 1/4-20UNC x 2	2
	96-954	Bolt, SHCS 1/4-20UNC x 2.25	2
	96-955	Bolt, SHCS 1/4-20UNC x 2.5	2
23	**96-793**	Clutch Release Kit, includes # 12,13,14,16,17(Qty: 3),and 18	
24	**96-668**	Throwout rod/bearing assembly, complete (6 SPD, LSD trans only)	
	96-666	Throwout rod/bearing assembly, complete (5 SPD, LSD trans only)	

ULTIMA® 5 SPEED TRANSMISSIONS FOR SOFTAIL®



Midwest is proud to offer our Ultima® 5 speed transmissions for Softail® models 1990 thru 1999 & custom applications.

5 SPEED Special features include:

- Ultima® transmission case cast in CNC machined permanent molds from A356 aluminum and hardened to T6 specifications, then fully machined on state-of the-art Mazak FH Horizontal Machining Center.
- Cases available in cast finish, polished finish or black powder coat finish. All Softail® 5 speed models come with speedo hole, and includes speedo block off plate.
- Ultima® polished billet trap door machined from 6061-T651 aluminum. 2.94:1 1st Gear on all 5 speed models provides close ratio shifting into 2nd gear.
- The shafts are 8620 with a case hardness to .070 depth; the cores are 35-38 HRC.
- Transmission gears are all back cut, made from high nickle, chrome moly steel, with lead-in ramps machined for better shifting.
- 12 month,12,000 mile warranty

5 SPEED SOFTAIL® COMPLETE TRANSMISSIONS

201-45 Assy., 5 Speed Softail®, cast finish w/speedo hole.
201-49 Assy., 5 Speed Softail®, polished finish w/speedo hole.
201-50 Assy., 5 Speed Softail®, black powder coat w/speedo hole.

HYDRAULIC CLUTCH END COVER FOR ULTIMA® & HD 5 & 6 SPEED TRANSMISSIONS

Fits 87'-03' stock Big Twins with 5 or 6 speed transmissions. Also fits Ultima® 5 & 6 speed LSD transmissions. Suited for a 9/16" or 5/8" bore master cylinder.

96-237 Smooth finish hyd. trans end cover. SOLD EACH



HEAVY DUTY SHIFT FORK

The same products used in our Ultima® transmissions, these are the strongest shift forks on the market today. These forks are made from a proprietary blend of aluminum bronze and are over three times as thick as stock shift forks. Bronze wears better than steel forks and by our design, these are a more rigid piece providing positive gear engagement. The material these forks are made from keeps ferrous material from being produced and floating around inside your transmission This keeps your gears and bearings in a more friendly environment and helps stop speedometer sensors from clogging.

96-890 Shift fork. Replaces OEM 34195-79D. SOLD EACH



ULTIMA® 5-SPEED TRANSMISSIONS- SHIFT MECHANISM

Item Number	Part Number	Description	Quantity
1	**96-759**	Retaining Ring, Shift Drum (OEM 11083)	1
2	**96-761**	0.017" Thick Thrust Washer (OEM 33205-80)	1
	96-762	0.020" Thick Thrust Washer (OEM 33206-80)	
	96-763	0.022" Thick Thrust Washer (OEM 33207-80)	
	96-764	0.025" Thick Thrust Washer (OEM 33208-80)	
	96-765	0.028" Thick Thrust Washer (OEM 33209-80)	
	96-766	0.031" Thick Thrust Washer (OEM 33210-80)	
	96-767	0.035" Thick Thrust Washer (OEM 33211-80)	
	96-768	0.039" Thick Thrust Washer (OEM 33212-80)	
3	**96-791**	Bolt, Pillow Blocks, 1/4-20 x1-1/4" (OEM 3993)	4
4	**96-758**	Washer, Pillow Blocks (OEM 6736)	4
5	**96-698**	Pillow Block(OEM 33332-79A) Detent Assembly, includes # 6,10,15,16	1
6	**95-599**	Shifter Cam Bearing, Right (OEM 9114)	1
7	**96-715**	Shift Cam/ Shift Drum (OEM 33320-79D)	1
8	**96-696**	Pillow Block (OEM 33326-79A), includes # 9	1
9	**95-600**	Shifter Cam Bearing, Left (OEM 9115)	1
10	**96-789**	Pin (OEM 601)	1
11	**96-701**	Steel Shifter Fork, Gear 1 Main Shaft (OEM 34195-79D)	1
	96-890	Bronze Heavy Duty Shift Fork, Gear 1 Main Shaft (OEM 34195-79D)	
12	**96-699**	Steel Shifter Fork, Gear 3 Counter Shaft (OEM 34191-79D)	1
13	**96-700**	Steel Shifter Fork, Gear 2 Main Shaft (OEM 34193-79D)	1
14	**96-790**	Set Screw, 1/2-20 x1/2 (OEM 3784)	1
15	**96-695**	Cam Follower, Shift Drum (OEM 34085-79A)	1
16	**96-771**	Spring (OEM 34089-79)	1
17	**96-680**	Adjusting Screw (OEM 33119-79B)	1
18	**96-681**	Jam Nut, Adjuster (OEM 7515)	1
19	**96-941**	Bolt, Shift Lever 5/16-24 x1" (OEM 856A)	1
20	**96-652**	Chrome Shift Rod Lever (OEM 33715-85)	1
21	**96-674**	Lever Assembly, Shift Pawl	1
22	**96-755**	Bushing, Shift Shaft (OEM 33114-79)	1
23	**95-787**	Seal, Shifter Shaft (OEM 12045)	1
24	**96-757**	Washer, Inner Shift Lever (OEM 6497HW)	1
25	**96-760**	Retaining Ring, Inner Shift Lever (OEM 11150)	1
26	**96-774**	Retaining Ring (OEM 11016)	1
27	**96-751**	Washer (OEM 6016)	1
28	**96-704**	Shift Pawl (OEM 34086-79)	1
29	**96-630**	Shifter Shaft Lever (OEM 34084-86)	1
30	**96-769**	Spring (OEM 34083-79)	1
31	**96-702**	Pin (OEM 34082-79)	1
32	**96-703**	Plate (OEM 35068-79)	1
33	**96-770**	Spring (OEM 34087-79A)	1
34	**96-638**	Shaft, Shift Fork (OEM 34088-87)	1

ULTIMA® 5-SPEED TRANSMISSIONS- SHIFT MECHANISM

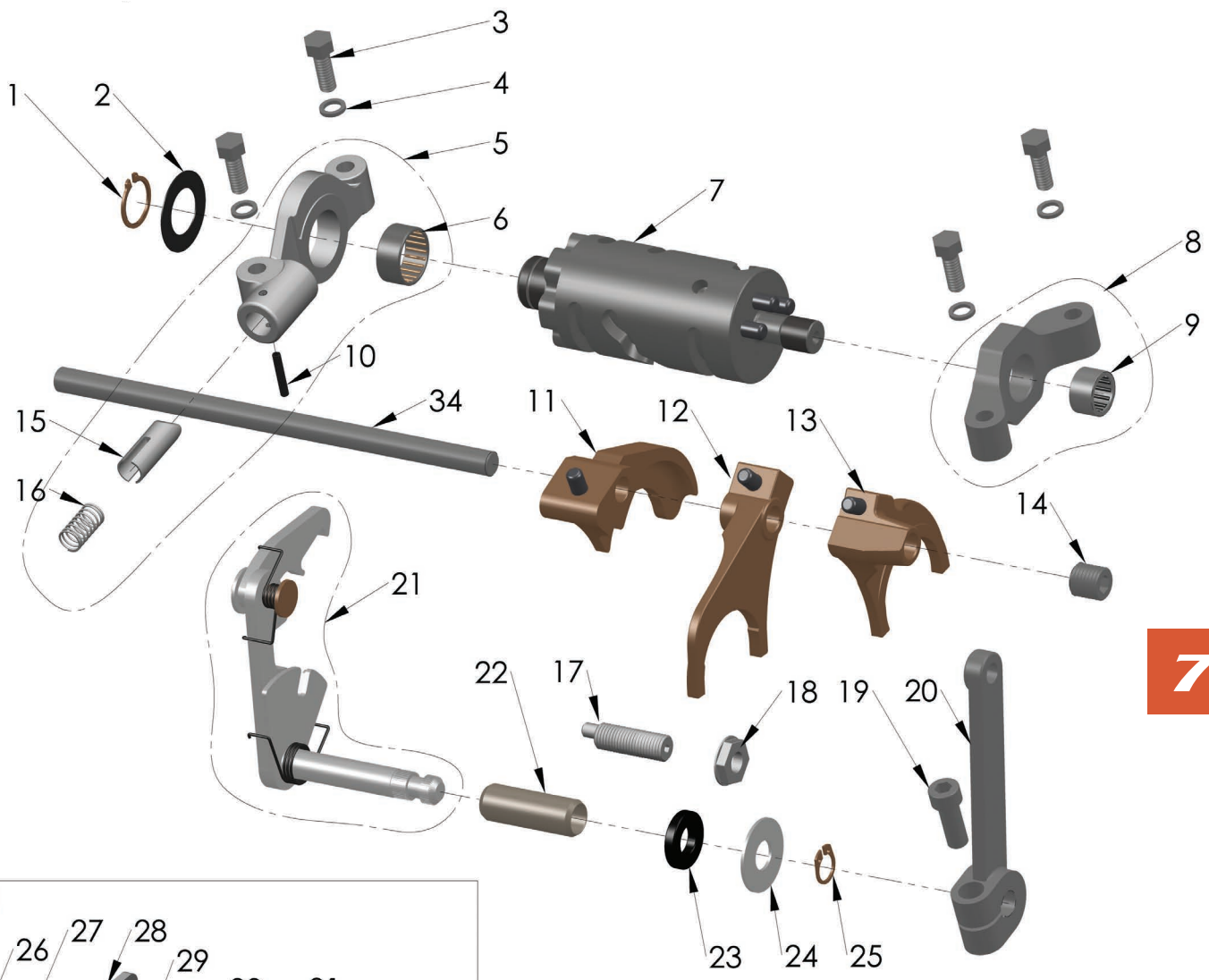

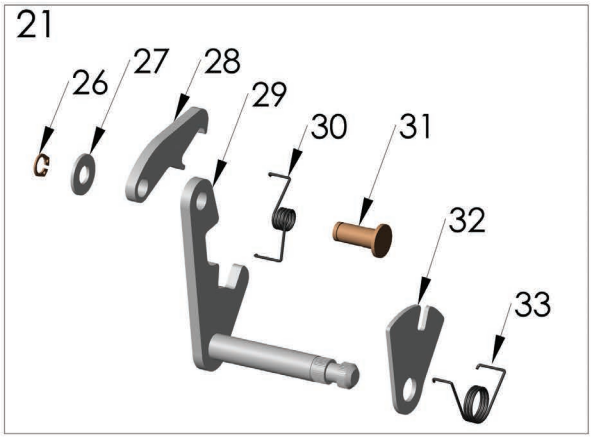

ULTIMA® 5-SPEED TRANSMISSIONS- GEAR TRAIN

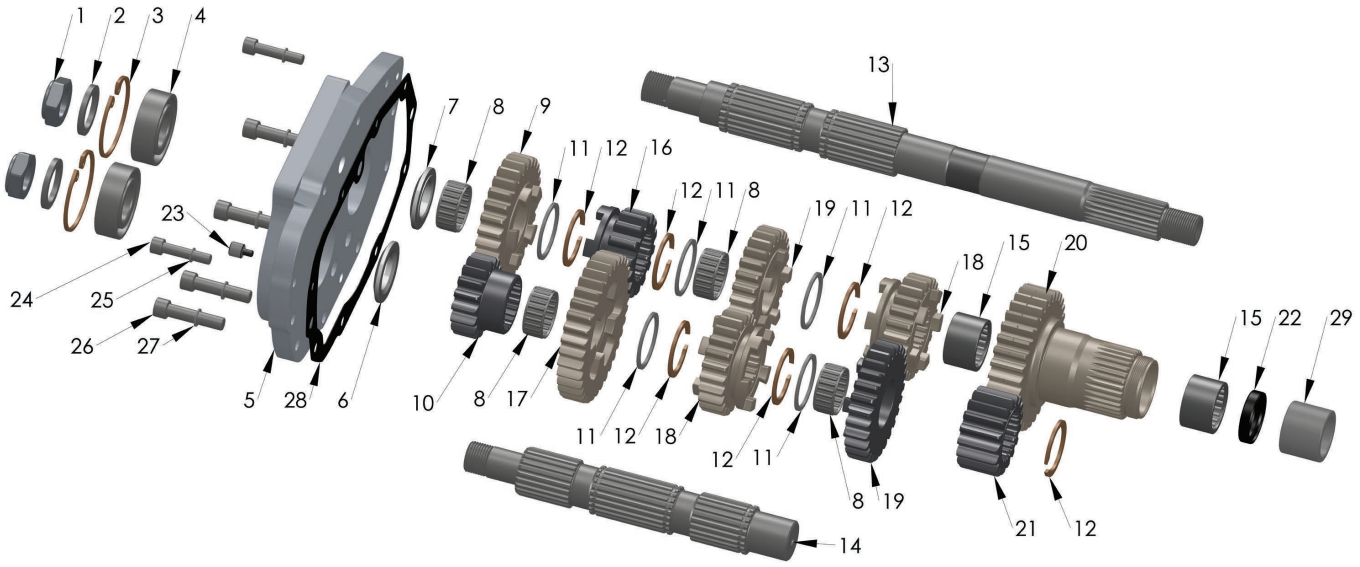

Item Number	Part Number	Description	Quantity
1	**96-683**	Locknut, Main Shaft and Counter Shaft (OEM 35078-79)	2
2	**96-684**	Spacer (OEM 35076-79)	2
3	**96-685**	Retaining Ring, Trap Door (OEM 11020)	2
4	**95-462**	Roller Bearing, Trap Door (OEM 8998)	2
5	**96-725**	Trap Door, Machine Finish, 5-Speed	1
	96-726	Trap Door, Polished, 5-Speed	
6	**96-658**	Counter Shaft Spacer (OEM 35629-79)	1
7	**96-657**	Main Shaft Spacer (OEM 35064-79)	1
8	**96-608**	Roller Bearing (OEM 8876A, for 1982 and later)	4
9	**98-915**	Fourth Gear, 29 teeth, Main Shaft (OEM 35028-79A)	1
10	**98-907**	Fourth Gear, 19 teeth, Counter Shaft (OEM 35625-79A)	1
11	**96-659**	Thrust Washer, Main Shaft and Counter Shaft (OEM 6003)	5
12	**96-621**	Retaining Ring, Main Shaft and Counter Shaft (OEM 11067)	6
13	**98-903**	Main Shaft, 5-Speed Transmission (OEM 35042-91)	1
14	**98-904**	Counter Shaft, 5-Speed Transmission (OEM 35632-79)	1
15	**96-609**	Bearing (OEM 35051-89, for 1991 and Later)	2
16	**98-905**	First Gear, 16 teeth, Main Shaft (OEM 35025-79A)	1
17	**98-912**	First Gear, 25 teeth, Counter Shaft (OEM 35622-79C)	1
18	**98-917**	Second Gear, Main Shaft/ Third Gear, Counter Shaft, 23 teeth (OEM 35026-79A)	2
19	**98-916**	Third Gear, Main Shaft/ Second Gear, Counter Shaft, 27 teeth (OEM 35027-79A)	2
20	**98-914**	Main Drive/Fifth Gear, 32 teeth, Main Shaft (OEM 35029-91), includes # 15, 22	1
21	**98-906**	Fifth Gear, 17 teeth, Counter Shaft (OEM 35626-79A)	1
22	**95-793**	Oil Seal, Gear End (OEM 12035A)	1
23	**41-167**	Drain Plug, Magnetic (OEM 739A)	1
24	**96-951**	Bolt, SHCS 1/4-20 x 1”	2
25	**96-947**	Washer (0.355” OD., 0.250” ID.)	2
26	**40-208**	Bolt, SHCS 5/16-18 x 3/4”	4
27	**96-949**	Washer (0.475” OD., 0.3125” ID.)	4
28	**78-452**	Gasket, Trap Door (OEM 35652-79), pkg of 10	1
	78-452A	Gasket, Trap Door (OEM 35652-79), sold each	1
29	**95-451**	Inner Race (OEM 34091-85)	1

ULTIMA 4,5 & 6 SPEED HEAVY DUTY TRANSMISSION CASES

These transmission cases are designed to be one of the strongest on the market with extra case thickness and full support gussets where needed. Special features include:

- Castings in CNC machined permanent molds from A356 aluminum and hardened to T6 specification, then fully machined on state-of-the-art Mazak FH Horizontal Machining Center.
- 5 Speed case Patent No. D412,466.
- Includes speedo drive hole plug part No. **41-105**.

Available in cast, polished & black powder coat finish with speedo hole (5 spd & 6 spd RSD), or without speedo hole (6 spd LSD).

NEW "LEAK FREE" BLIND MOUNTING STUDS!

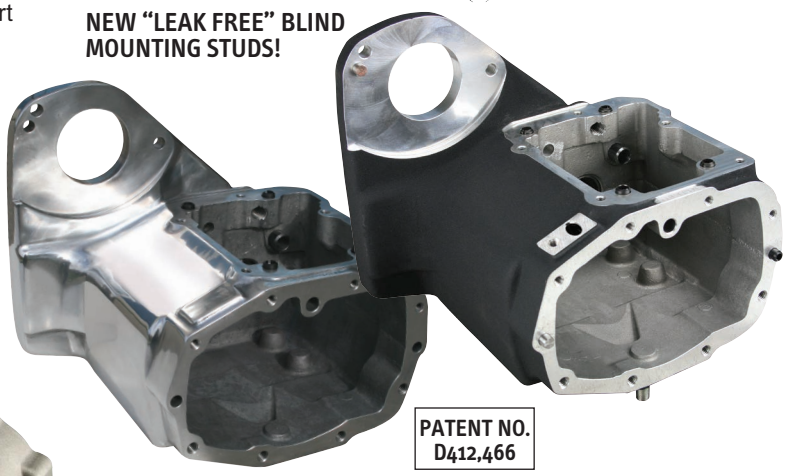

PATENT NO. D412,466



298-100

DESCRIPTION	CAST FINISH PART NO.	CAST FINISH WITH SPEEDO HOLE	POLISHED FINISH WITH SPEEDO HOLE	BLACK POWDER COAT WITH SPEEDO HOLE
5 & 6 SPEED SOFTAIL®				
Case, 5 & 6 Speed Softail®, complete with main bearing & retaining ring, countershaft bearing, shift shaft bushing, case studs, and all alignment pins.	—	298-110	298-112	298-109
Bare case only, 5 & 6 Speed Softail®.	—	298-106	298-113	298-105
4 SPEED				
Bare case only, 4 Speed 1965 thru 1978.	298-100			
Bare case only, 4 Speed 1936 thru 1964.	298-125			

7

ULTIMA® SIX SPEED BUILDERS KIT

The Ultima Six Speed Builders kit was designed to provide a simple, low cost, 6 speed overdrive solution for 1990/L Big twin owners. These kits work in most 1990-1999 models with little or no modification. A speedometer recalibration unit is required on some 1996-2000 and all 2001 later models. These kits will work in 5 spd type 2000/Later models with additional minor modifications. The trap door is thicker than stock so any brackets used that are trap door mounted may need modification. Complete instructions included or available online. All Touring FLT and FLH Models 93/L require an oil filler spacer #89-14. Ultima 6 Speed Gear sets can use the same #17-152 speedometer recalibrator unit as our transmissions.
*Instructions included and available online @ www.ultimaproducts.com.

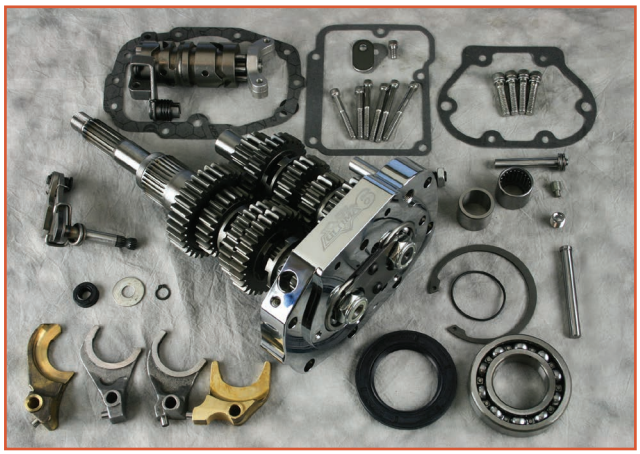

Features:
- Roller Detent for smoother shifting
- Precision Ground 8620 Gears and shafts
- Chrome Plated Billet Trap Door
- Gear Ratios are:
  1. 2.94: 1
  2. 2.21: 1
  3. 1.57: 1
  4. 1.23: 1
  5. 1: 1
  6. .86: 1

98-902 Ultima 6 Speed Builders Kit
1990 & later Big Twin 5-spd models.

ULTIMA® 6 & 5-SPEED TRANSMISSION CASES

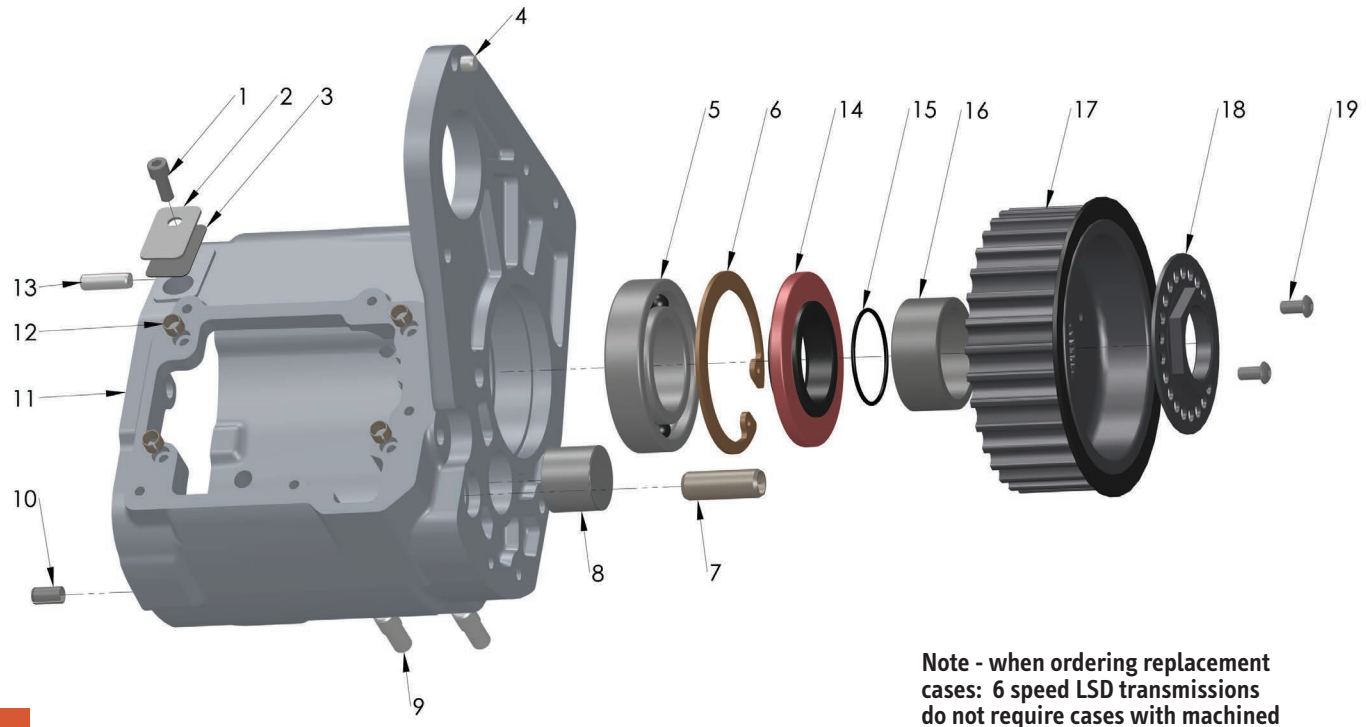

Note - when ordering replacement cases: 6 speed LSD transmissions do not require cases with machined in speedo hole.

CASE KITS: Complete with main bearing, retaining ring, counter shaft bearing, shift shaft bushing, case studs, and all alignment pins. Includes items 1 Thru 13.

298-110 Cast Finish w/Speedo Hole
298-112 Polished Finish w/Speedo Hole
298-109 Black Powder Coat w/Speedo Hole

Item Number	Part Number	Description	Quantity
1	**98-929**	Screw, SHCS 1/4-20 x 7/16"	1
2	**98-930**	Cover Plate, Speedo Hole	1
3	**98-931**	Gasket, Cover Plate	1
4	**96-775**	Pin, Alignment (OEM 337)	1
5	**95-432**	Bearing, Left Side Main Shaft (OEM 8996)	1
6	**95-433**	Snap Ring (OEM 11161)	1
7	**96-755**	Bushing, Shift Shaft (OEM 33114-79)	1
8	**95-434**	Bearing, Left Side Counter Shaft (OEM 8977)	1
9	**96-773**	Stud, Case (OEM 11733)	5
10	**96-777**	Pin (OEM 634)	1
11	**N/A**	Transmission Case, See page 7/17.	1
12	**96-750**	Pin (OEM 609)	4
13	**96-776**	Pin (OEM 375)	1
14	**95-791**	Main Shaft Seal (OEM 12067A)	1
15	**95-650**	Quad Seal, O-ring (OEM 11165)	1
16	**96-826**	Transmission Spacer (OEM 33344-94)	1
17	**94-378**	Pulley, 32T, includes # 18,19	1
18	**94-381**	Lock Nut Kit, includes # 19 (OEM 35211-91, 40251-91, and 3594)	1
19	**98-925**	Screw, Button Head, 1/4-20 x 5/8" (OEM 3594)	2

ULTIMA 5 & 6 SPD KICKER CONVERSION KIT

Starter acting up? Increase your options & don't get left behind!

Convert that "electric start only" bike to a kicker in less than an hour. New to the lineup, Ultima is now offering top quality kicker conversion kits for use w/99' & earlier style 5 & 6spd transmissions. (cable operated clutch release)

Instructions available online at www.ultimaproducts.com.

96-969 Kicker conversion kit. SOLD AS KIT

96-958 Mainshaft kicker gear spacer (required for 5spd installation). SOLD EACH

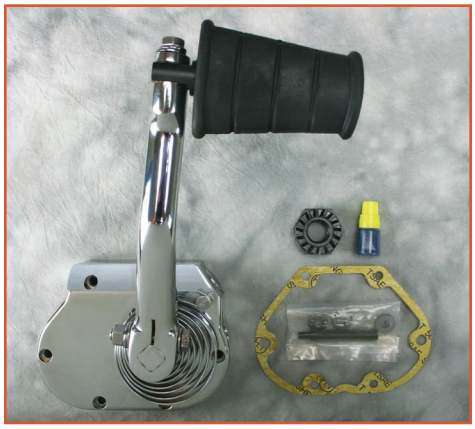



96-958
.350 thick

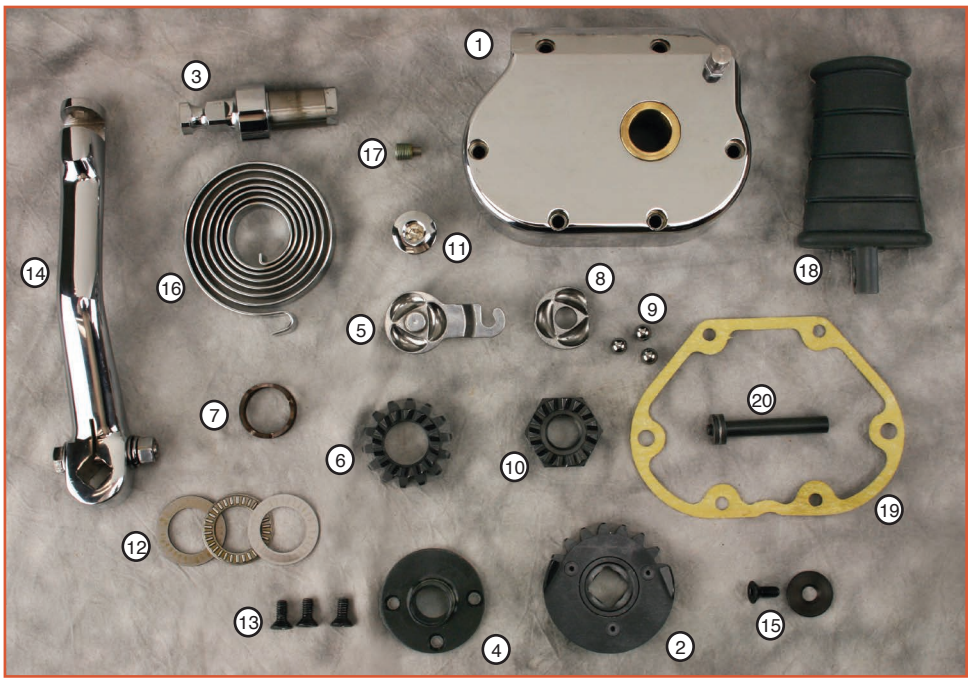

NO #	MW #	DESCRIPTION	U/M
1	**96-983**	Kicker cover	Sold each
2	**96-984**	Kicker crank gear	Sold each
3	**96-985**	Kicker shaft	Sold each
4	**96-986**	Kicker gear guide	Sold each
5	**96-987**	Ball & ramp top	Sold each
6	**96-988**	Kicker main gear (drive)	Sold each
7	**96-989**	Kicker spring	Sold each
8	**96-990**	Ball & ramp bottom	Sold each
9	**96-991**	Ball & ramp bearings	Pkg 3
10	**96-992**	Mainshaft nut/gear (driven)	Sold each
11	**96-993**	Fill plug	Sold each
12	**96-994**	Kicker bearing assembly	Pkg
13	**96-995**	Flathead bolt kit	Pkg 3
14	**96-996**	Kicker arm	Sold each
15	**96-997**	Retaining washer/flathead bolt	Pkg
16	**96-167**	Kicker return spring	Sold each
17	**41-167**	Drain screw, magnetic	Sold each
18	**22-71**	Kicker pedal	Sold each
19	**78-455A**	Cover gasket	Sold each
20	**96-668**	Throwout assembly	Sold each

TRANSMISSION HOUSING & PARTS FOR 5 SPEED FXR

ALL PARTS SOLD EACH EXCEPT AS NOTED

1	**96-781**	SCREW (OEM 4741A)
2	**96-563**	TOP COVER 1987 & LATER (OEM 34468-86A))
3	**96-754**	WASHER (OEM 33043-80)
4	**17-72**	NEUTRAL LIGHT SWITCH 1982 & LATER 5 SPD. (OEM 33900-59)
5	**21-304**	VENT FITTING CHROME (OEM 62375-57)
6	**78-461**	GASKET (OEM 34904-86), SOLD EACH
	78-461A	GASKET (OEM 34904-86), SOLD EACH
7	**96-683**	SHAFT NUT (OEM 35078-79)
8	**96-782**	SCREW (OEM 4814)
9	**96-684**	SPACER (OEM 35076-79)
10	**96-776**	PIN (OEM 375)
11	**96-685**	SNAP RING (OEM 11020)
12	**96-750**	PIN (OEM 609)
13	**96-775**	PIN (OEM 337)
14	**95-432**	LEFT SIDE MAINSHAFT BEARING (OEM 8996)
15	**95-433**	SNAP RING (OEM 11161)
16	**95-650**	QUAD SEAL (OEM 11165)
17	**95-431**	MAINSHAFT SEAL 1979/EARLY 1984 (OEM 12044A)
	95-736	MAINSHAFT SEAL LATE 1984/1994 (OEM 12050)
	95-791	MAINSHAFT SEAL (OEM 12067A)
18	**96-709**	TRANS SPACER LATE 1994 & LATER. .60". **U.S.A. MADE** (OEM 33344-94)
	96-825	TRANS SPACER LATE 1984/EARLY 1994 .85". IMPORT (OEM 33334-85)
	96-826	TRANS SPACER LATE 1994 & LATER .60". IMPORT (OEM 33344-94)
19	**41-167**	MAGNETIC 1/8 - 27 NPT INTERNAL HEX HEAD PLUG. REPLACES OEM 739A.
20	**96-779**	SCREW (OEM 3210A)
21	**96-751**	WASHER (OEM 6016)
22	**95-462**	BEARING (OEM 8998)
23	**78-452**	GASKET (OEM 35652-79), PKG OF 10
	78-452A	GASKET (OEM 35652-79), SOLD EACH
24	**96-777**	PIN (OEM 634)
25	**96-15**	WASHER (OEM 6007)
26	**41-164**	3/8 - 18 MAGNETIC PLUG. REPLACES OEM 722.
	96-16	PLUG (OEM 722A)
27	**96-755**	SPACER (OEM 33114-79)
28	**95-434**	COUNTER SHAFT BEARING (OEM 8977)
29	**96-780**	SCREW (OEM 4717A)
30	**95-241**	O-RING (OEM 11132)
31	**41-592**	HEX HEAD TRANS FILLER CAP/DIPSTICK FLT & 5 SPD 1985 & 1986. COLONY.
	41-285	ALLEN HEAD TRANS FILLER CAP/DIPSTICK FLT & 5 SPD. GARDNER WESCOTT
32	—	HYDRAULIC CLUTCH KIT COMPLETE. REPLACES OEM 45380-02C.
33	**96-753**	O-RING (OEM 11179)
34	—	TRANS RELEASE END COVER FXR 1987/1994(OEM 37109-87A)
35	**96-785**	OUTER RAMP (OEM 25453-87A)
36	**96-783**	BALL (OEM 8873)
37	**96-784**	INNER RAMP (OEM 25452-87A)
38	**96-788**	COUPLING (OEM 34920-86)
39	**96-772**	RET. RING (OEM 10998)
40	**78-455**	GASKET (OEM 36801-87A), PKG OF 10
	78-455A	GASKET (OEM 36801-87A), SOLD EACH

TRANSMISSION HOUSING & PARTS FOR 5 SPEED FXR

AL PARTS SOLD EACH EXCEPT AS NOTED

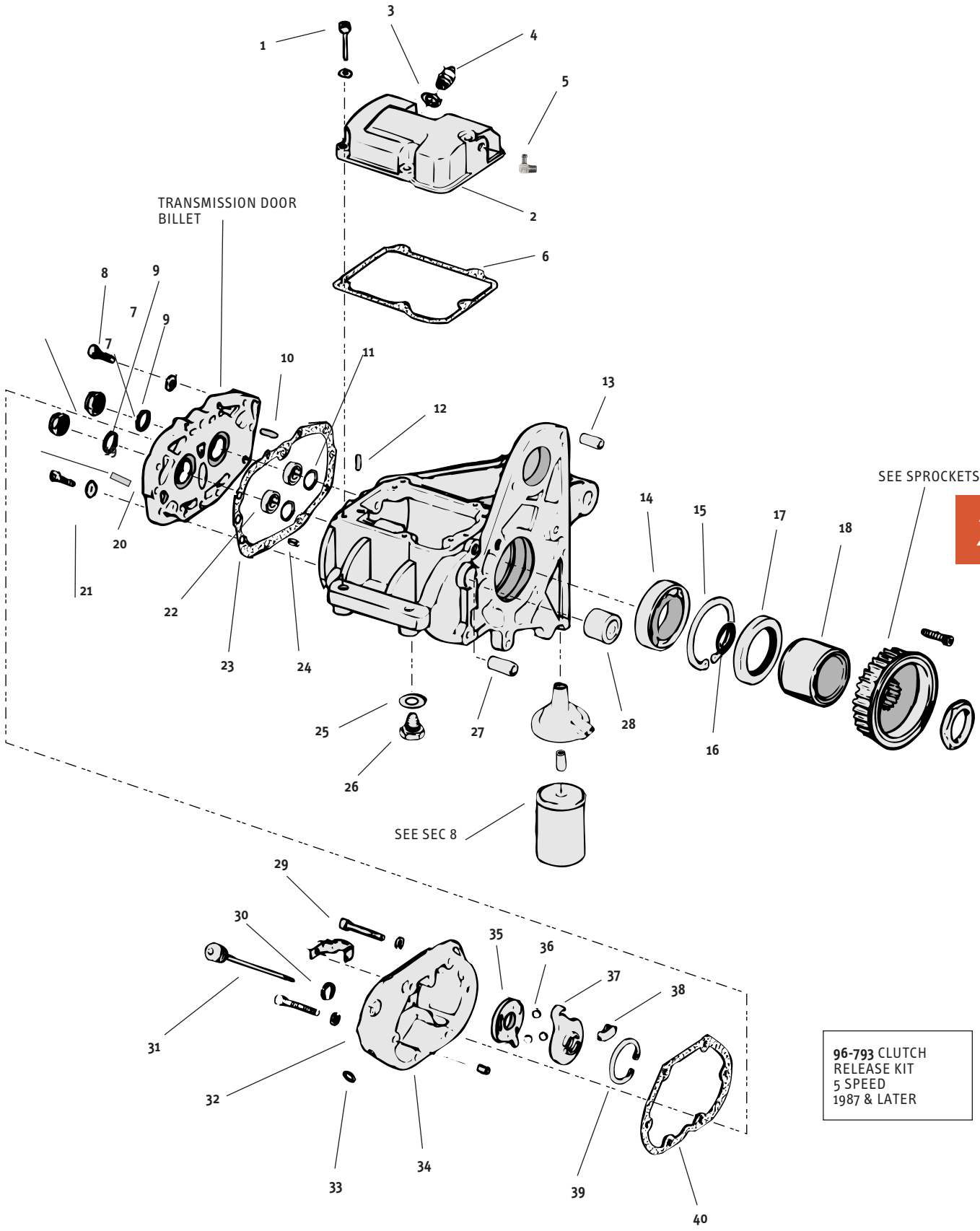

96-793 CLUTCH RELEASE KIT
5 SPEED
1987 & LATER

TRANSMISSION HOUSING & PARTS FOR 5 SPEED FXST/FLST

ALL PARTS SOLD EACH EXCEPT AS NOTED

1	**96-781**	SCREW (OEM 4741A)
2	**96-563**	TRANS TOP COVER 1987 & LATER (OEM 34468-86A)
3	**96-754**	WASHER (OEM 33043-80)
4	**17-72**	NEUTRAL LIGHT SWITCH 1982 & LATER(OEM 33900-59)
5	**21-304**	VENT FITTING CHROME (OEM 62375-57)
6	**78-461**	GASKET (OEM 34904-86), SOLD EACH
	78-461A	GASKET (OEM 34904-86), SOLD EACH
7	**96-683**	SHAFT NUT (OEM 35078-79)
8	**96-782**	SCREW (OEM 4814)
9	**96-684**	SPACER (OEM 35076-79)
10	**96-776**	PIN (OEM 375)
11	**96-685**	SNAP RING (OEM 11020)
12	**96-750**	PIN (OEM 609)
13	**96-775**	PIN (OEM 337)
14	**95-432**	LEFT SIDE MAINSHAFT BEARING (OEM 8996)
15	**95-433**	SNAP RING (OEM 11161)
16	**95-431**	MAINSHAFT SEAL 1979/E 1984 (OEM 12044A)
	95-736	MAINSHAFT SEAL L 1984/1994 (OEM 12050)
	95-791	MAINSHAFT SEAL (OEM 12067A)
17	**96-825**	TRANS SPACER LATE 1984/E 1994 .85". IMPORT (OEM 33334-85)
	96-826	TRANS SPACER LATE 1994 & LATER .60". IMPORT (OEM 33344-94)
18	**41-167**	MAGNETIC 1/8 - 27 NPT INTERNAL HEX HEAD PLUG. REPLACES OEM 739A.
19	**96-779**	SCREW (OEM 3210A)
20	**96-751**	WASHER (OEM 6016)
21	**78-452**	GASKET (OEM 35652-79), PKG OF 10
	78-452A	GASKET (OEM 35652-79), SOLD EACH
22	**95-462**	BEARING (OEM 8998)
23	**96-777**	PIN (OEM 634)
24	**96-773**	STUD (OEM 11733)
25	**96-755**	SPACER (OEM 33114-79)
26	**95-434**	COUNTER SHAFT BEARING (OEM 8977)
27	**96-780**	SCREW (OEM 4717A)
28	**95-241**	O-RING (OEM 11132)
29	**41-285**	ALLEN HEAD TRANS FILLER CAP/DIPSTICK FLT & 5 SPD. GARDNER WESCOTT
	41-592	HEX HEAD TRANS FILLER CAP/DIPSTICK FLT & 5 SPD. COLONY.
30	**—**	HYDRAULIC CLUTCH KIT COMPLETE. REPLACES OEM 45380-02C.
31	**96-753**	O-RING (OEM 11179)
32	**96-554**	TRANS RELEASE END COVER SOFTAIL® & FLT 1987 & LATER (OEM 37105-87A)
33	**96-785**	OUTER RAMP (OEM 25453-87A)
34	**96-783**	BALL (OEM 8873)
35	**96-784**	INNER RAMP (OEM 25452-87A)
36	**96-788**	COUPLING (OEM 34920-86)
37	**96-772**	RET. RING (OEM 10998)
38	**78-455**	GASKET (OEM 36801-87A), PKG OF 10
	78-455A	GASKET (OEM 36801-87A), SOLD EACH

TRANSMISSION HOUSING & PARTS FOR 5 SPEED FXST/FLST

ALL PARTS SOLD EACH EXCEPT AS NOTED

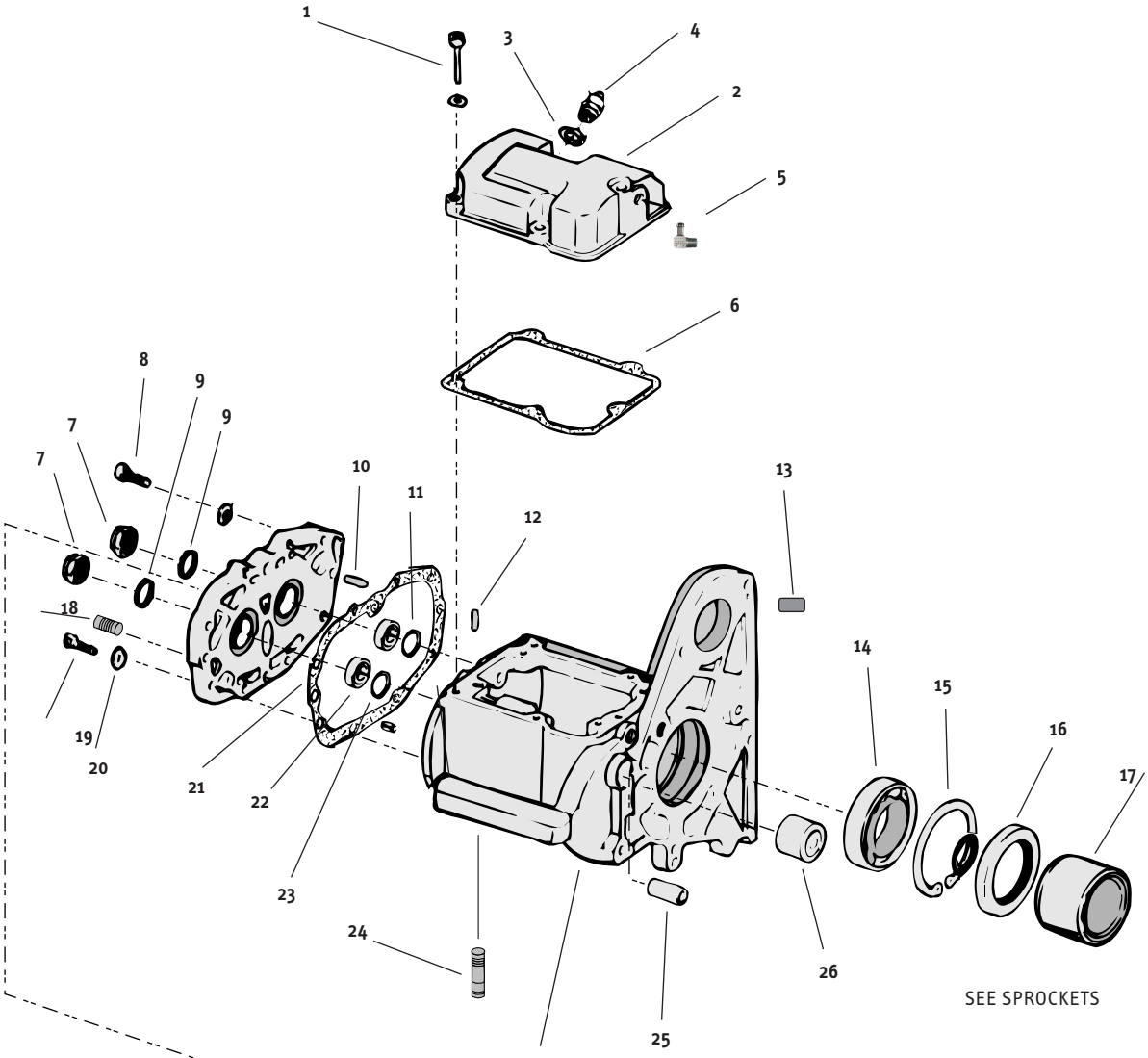

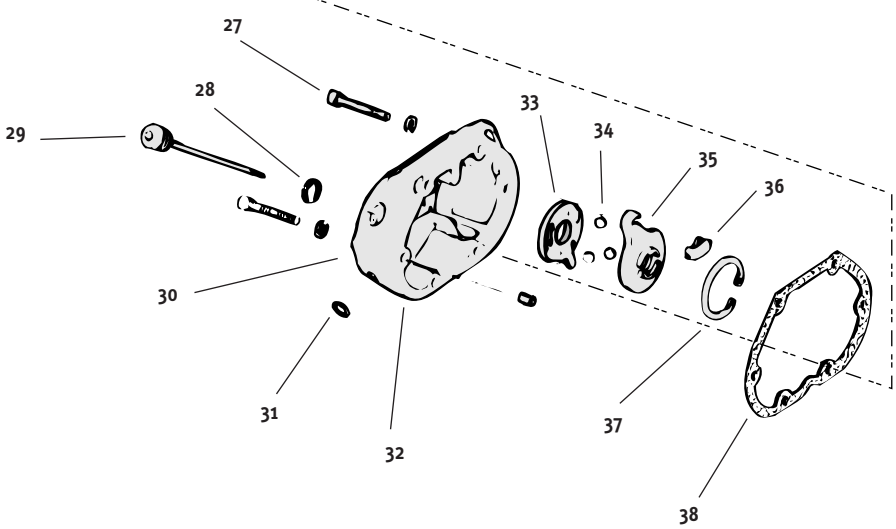

96-793 CLUTCH
RELEASE KIT
5 SPEED
1987 & LATER

TRANSMISSION GEARS FOR 5 SPEED BIG TWIN

ALL PARTS SOLD EACH EXCEPT AS NOTED

1	96-657	MAINSHAFT SPACER (OEM 35064-79)
2	—	4TH MAIN GEAR. ANDREWS (OEM 35028-79A)
3	96-659	THRUST WASHER (OEM 6003)
4	96-621	RETAINING RING (OEM 11067)
5	—	MAINSHAFT FIRST GEAR. ANDREWS (OEM 35025-79B)
	96-660	MAINSHAFT FIRST GEAR. JIMS (OEM 35025-79B)
6	96-452	CLIP (OEM 11096)
7	96-451	BEARING
8	96-608	BEARING FOR 1982 & LATER (OEM 8876A) SOLD EACH
9	—	MAINSHAFT, CHAIN DRIVE FOR 1981/1984. ANDREWS (OEM 35042-79)
	—	MAINSHAFT, BELT DRIVE, FOR 1991 & LATER. ANDREWS (OEM 35042-91)
10	96-204	KEY FOR 1985/1989 (OEM 37523-85)
11	—	3RD MAIN 2ND COUNTER. ANDREWS (OEM 35027-79A)
12	—	3RD COUNTER 2ND MAIN. ANDREWS (OEM 35026-79A)
13	—	MAIN DRIVE GEAR, BELT DRIVE, FOR 1985/1990. ANDREWS (OEM 35029-85)
	—	MAIN DRIVE GEAR, BELT DRIVE FOR 1991 & LATER. ANDREWS (OEM 35029-91A)
14	96-609	BEARING FOR 1991 & LATER (OEM 35051-89) SOLD EACH
15	95-793	MAIN GEAR END OIL SEAL 1985 & LATER. COMETIC

11	—	3RD MAIN 2ND COUNTER. ANDREWS (OEM 35027-79A)
12	—	3RD COUNTER 2ND MAIN. ANDREWS (OEM 35026-79A)
13	—	MAIN DRIVE GEAR, BELT DRIVE, FOR 1985/1990. ANDREWS (OEM 35029-85)
	—	MAIN DRIVE GEAR, BELT DRIVE FOR 1991 & LATER. ANDREWS (OEM 35029-91A)
14	96-609	BEARING FOR 1991 & LATER (OEM 35051-89) SOLD EACH
15	95-793	MAIN GEAR END OIL SEAL 1985 & LATER. COMETIC (OEM 12035A)
16	95-451	INNER RACE (OEM 34091-85)
17	96-658	COUNTERSHAFT SPACER (OEM 35629-79)
18	—	4TH COUNTER GEAR. ANDREWS (OEM 35625-79A)
19	—	COUNTERSHAFT FIRST GEAR. ANDREWS (OEM 35622-79C)
20	—	COUNTER SHAFT. ANDREWS (OEM 35632-79)
21	—	5TH COUNTER. ANDREWS (OEM 35626-79A)

A. THRUST WASHERS FOR SPORTSTER® COUNTER SHAFT LOW GEAR RIGHT 1954 THRU 1985

QTY.	OEM NO.	MIDWEST PART NO.	DESCRIPTION
1	35818-72	96-486	0.0201
1	35327-73	96-487	0.025
1	35819-72	96-488	0.030
1	35328-73	96-489	0.035
1	35821-72	96-490	0.040
1	35329-73	96-491	0.045
1	35820-52	96-492	0.050
1	35821-52	96-493	0.055
1	35824-52	96-494	0.060
1	35825-52	96-495	0.065
1	35828-52	96-496	0.070
1	35829-52	96-497	0.075

INDIVIDUAL WASHERS SOLD EACH

B. THRUST WASHERS FOR SPORTSTER® COUNTER SHAFT LOW GEAR LEFT 1955 THRU EARLY 1984

QTY.	OEM NO.	MIDWEST PART NO.	DESCRIPTION
1	35840-52	96-498	0.065
1	35836-55	96-499	0.075
1	35838-55	96-500	0.085
1	35839-55	96-501	0.100

INDIVIDUAL WASHERS SOLD EACH

C. THRUST WASHERS FOR SPORTSTER® MAINSHAFT RIGHT 1954 THRU 1985

QTY.	OEM NO.	MIDWEST PART NO.	DESCRIPTION
1	35343-73	—	0.030
1	35344-73	96-507	0.040
1	35349-52	96-508	0.050
1	35350-52	96-509	0.055
1	35351-52	96-510	0.060
1	35352-52	96-511	0.065
1	35353-52	96-512	0.070
1	35354-52	96-513	0.075
1	35326-73	96-514	0.080
1	35355-72	96-515	0.085
1	N/A	96-516	0.090
1	35357-82	96-517	0.098
1	35358-82	96-518	0.107
1	35359-82	96-519	0.116
1	35360-82	96-520	0.125

INDIVIDUAL WASHERS SOLD EACH

D. THRUST WASHERS FOR SPORTSTER® MAINSHAFT RIGHT 1986 & LATER

QTY.	OEM NO.	MIDWEST PART NO.	DESCRIPTION
1	35380-84	96-521	0.0965
1	35381-84	96-522	0.0905
1	35382-84	96-523	0.0845
1	35383-84	96-524	0.0795
1	35384-84	96-525	0.0727
1	35385-84	96-526	0.0675

INDIVIDUAL WASHERS SOLD EACH

TRANSMISSION GEARS FOR 5 SPEED BIG TWIN

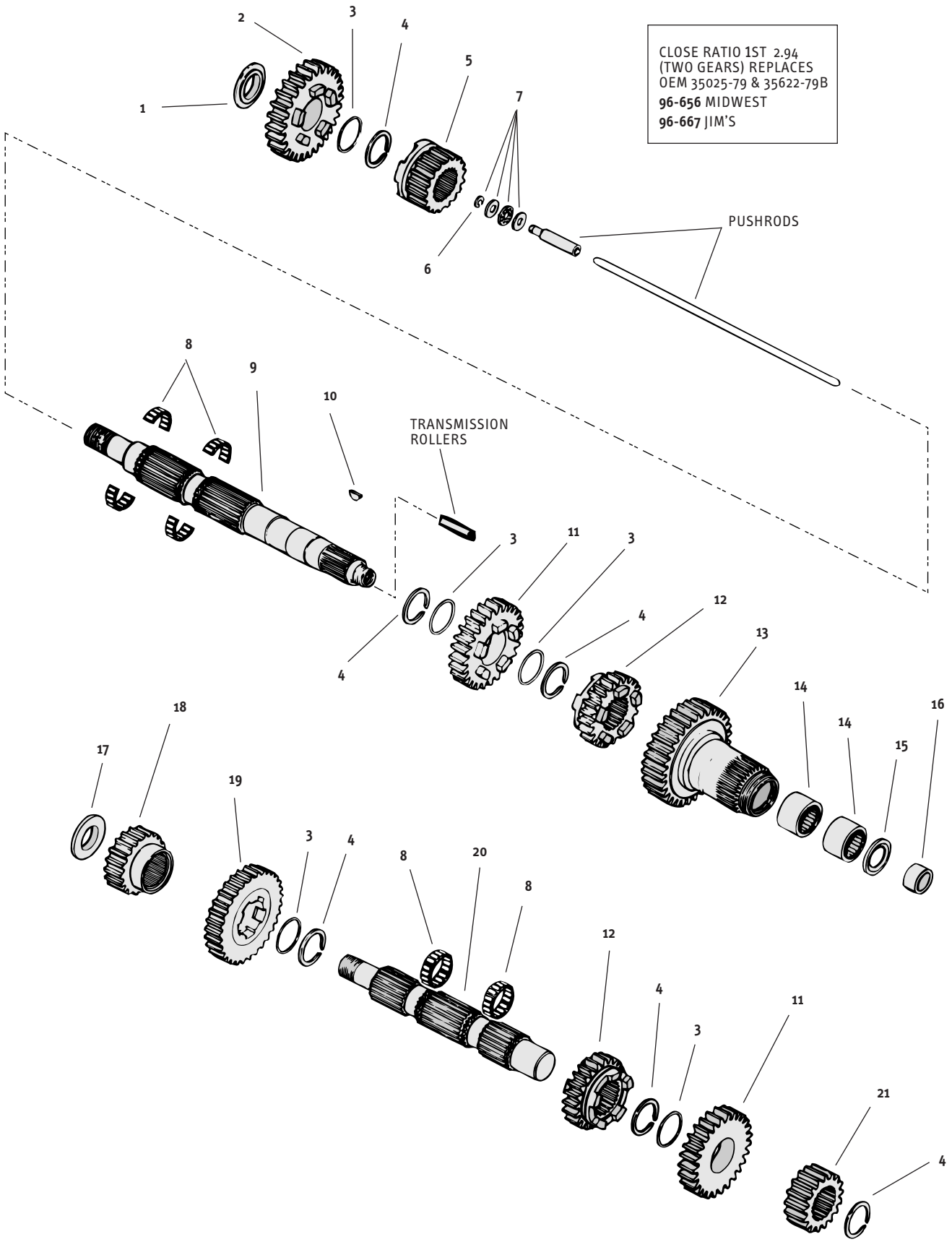

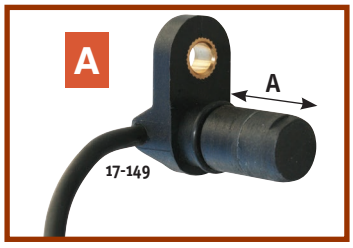



A. *SPEEDOMETER SENSORS*

Used to send electronic pulses to the speedometer from 5 & 6 speed transmissions. A = protrusion depth

17-149	Speed sensor, OEM 74402-95B	A = 1.190"	SOLD EACH
17-150	Speed sensor, OEM 74420-94C	A = 0.810"	SOLD EACH
17-151	Speed sensor, OEM 74437-96	A = 0.810"	SOLD EACH

B

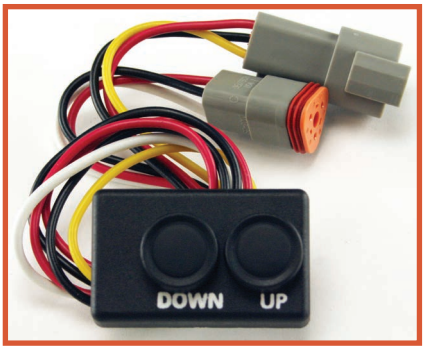

B. *ULTIMA® SPEEDOMETER RECALIBRATION MODULE*

A speedometer recalibration module is required when changing the gearing or tire size on a motorcycle that doesn't have a programmable speedometer. This module adjusts the output of the speedometer sensor so that the speedometer registers the correct MPH.

17-152 Speedometer recalibration module — SOLD EACH

C

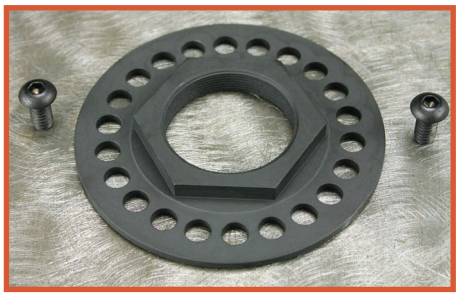

C. *ULTIMA® PULLEY LOCK NUT*

Fits 93 & later XL & Big Twins with belt final drive & custom applications. Helps eliminate loose pulley nuts by adding the locking plate to the nut. Bolts are included.

94-381 Ultima® pulley lock nut — SOLD EACH

7

D



D. *EASY PULL CLUTCH KIT FOR BIG TWIN*

Reduces the amount of effort needed to operate the clutch lever. Complete clutch disengagement is still achieved. Installs easily.

96-560 Fits Big Twin 1987 & later except FXR and Sportster® 1986 thru 1990. — SOLD AS KIT

E



E. *SPEEDO BLOCK OFF PLATE FOR 5 SPEED*

Fits Big Twin & Sportster®. Covers hole if not using speedometer pick-up sensor.

96-882	Block off plate with gasket & screw.	SOLD AS KIT
78-528	Gasket only.	SOLD EACH

F

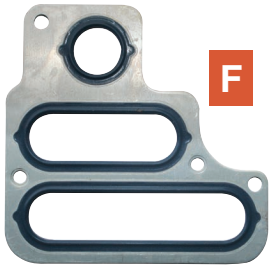

78-601

F. *ENGINE TO TRANS INTERFACE GASKET*

Metal and rubber gasket used between the Twin Cam® engine and the transmission. OEM 35607-06.

78-601 For '07-'16 FLHT, FLHR, FLHX & FLTR. '06-'16 Dyna models. — SOLD EACH

G



96-563

CHROME PLATED

G. *TOP COVERS FOR BIG TWIN 5 SPEED TRANSMISSION*

Bringing your Big Twin 5 speed the "factory custom" look at the right price.

96-563	For 1987 & later. Replaces OEM 34468-86A.	SOLD EACH
21-304	Vent fitting. Chrome. Replaces OEM 62375-57.	SOLD EACH

H



96-567

H. *TRANSMISSION TOP COVERS FOR NEWER MODEL H-D*

96-567 Trans top cover, OE#34541-00, fits 00'-up Softails® and 01'-up' Touring models. — SOLD EACH

A. *CLUTCH RELEASE TRANS END COVERS*

96-554 Ribbed front. For Softail® & FLT, 1987 & later. Replaces OEM 37105-87A. SOLD EACH

96-883 Smooth front. For Big Twin 5 speed 1987 & later, except FXR 1987 thru 1994. Replaces OEM 37105-99.

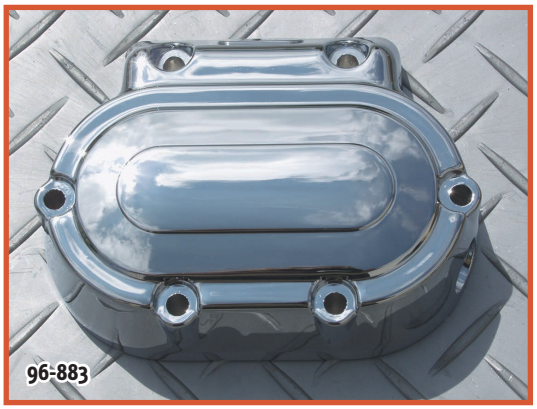

CHROME PLATED

B. *HYDRAULIC CLUTCH END COVER FOR ULTIMA® & HD 5 & 6 SPEED TRANSMISSIONS*

Fits 87'-03' stock Big Twins with 5 or 6 speed transmissions. Also fits Ultima® 5 & 6 speed LSD transmissions. Suited for a 9/16" or 5/8" bore master cylinder.

96-237 Smooth finish hyd. trans end cover. SOLD EACH

A



B



7

5 SPEED TRANSMISSION GEARS FOR BIG TWIN



2.94 1st Gears provide true close ratio shifting into 2nd. At peak rpm, these gears add 5 mph of usable 1st gear. (Two pieces.)

96-656 Midwest gears. SOLD AS SET

GEAR	MAIN DRIVE	SPEED GEAR	OVERALL RATIO	% RPM DROP	MPH PER 1000 RPM
1st (Stk.)	32/17	31/18	3.24	32	6.81
1st (Close)	32/17	25/16	2.94	25	7.50
2	32/17	27/23	2.21	27	9.99
3	32/17	23/27	1.60	23	13.79
4	32/17	19/29	1.23	19	17.94
5	32/17	(Direct Drive)	1.00	—	22.07

Since we get many question regarding transmission gear ratios, a table of values for EV-80 transmissions is shown below along with an explanation of how the actual numbers are determined. The internal ration (in any gear) is a combination of the speed gear ratio and the main drive gear ratio. The numbers below are the numbers of teeth on each mating pair of gears.

To calculate the internal gear ratio in 2nd gear for example, multiply 32/17 times 27/23; (32/17 x 27/23) = 2.21.

To calculate MPH per 1000 engine RPM: (assuming a 25" dia. rear wheel and a stock 3.37 final drive ratio); (25 x 3.14159) / 12 x (1000 / (3.37 x 60) x (3.0 / 4.4.) = 22.07 MPH per 1000 engine RPM (in 5th gear).

To calculate MPH per 1000 engine RPM in 3rd gear: Divide 22.07 by 1.60 (22.07 / 1.60) = 13.8 MPH per 1000 engine RPM (in 3rd gear).

The 5 speed gear box has actually been around for several years but the growing number of modifications for the EV 1340 engine has created a lot more interest in it. In addition to close ratio first gears, Andrews Products also makes replacement gears for 2nd, 3rd, 4th and 5th gear sets. As with the close first gears, all 5 speed gears are made from high nickel alloy and heat treated and shot-peened to give maximum durability and strength. Also, where applicable, lead-in ramps have been machined into some gears to improve shifting and reduce wear on drive dogs and drive slots.

TRANSMISSION PARTS FOR 5 SPEED FXR, FLT & CLASSIC 1980 THRU 1986

78-452	Bearing housing gasket. OEM 35652-79. U.S.A. MADE.	SOLD AS PKG.
78-452A	Bearing housing gasket. OEM 35652-79. U.S.A. MADE.	SOLD EACH
78-453	Upper cover gasket. OEM 34904-79. U.S.A. MADE.	SOLD AS PKG.
78-454	Release cover gasket. OEM 36801-79. U.S.A. MADE.	SOLD AS PKG.

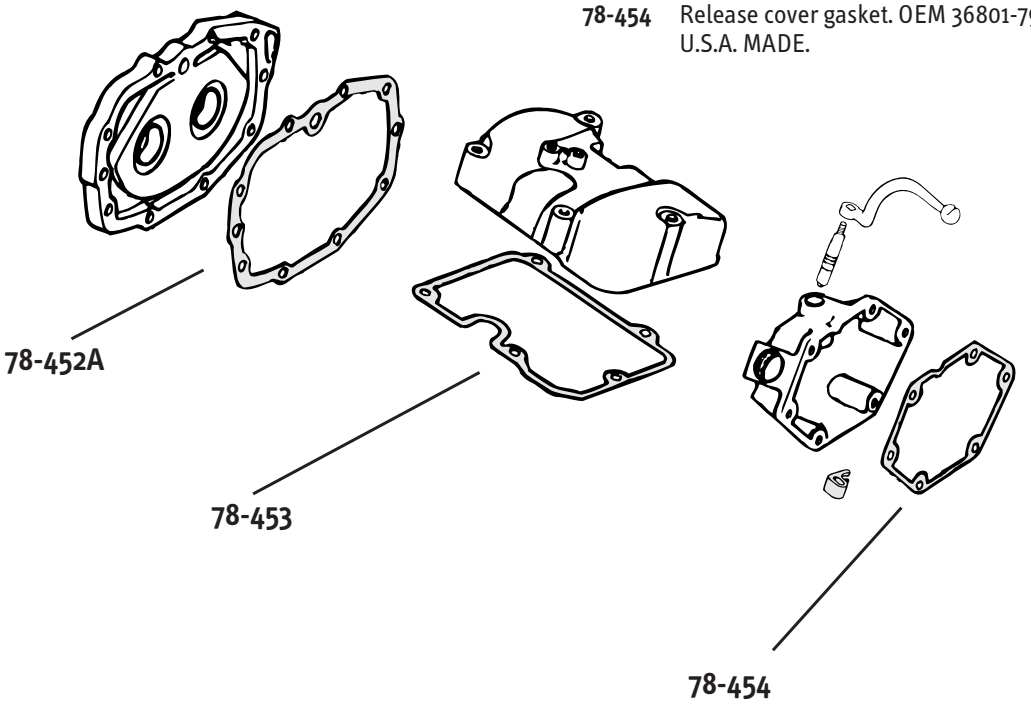

5 SPEED SHIFTER PARTS 1985 & LATER

ALL PARTS SOLD EACH EXCEPT AS NOTED SEE SECTION 4 FOR FOOT & HAND SHIFT PEGS, LEVERS & RODS

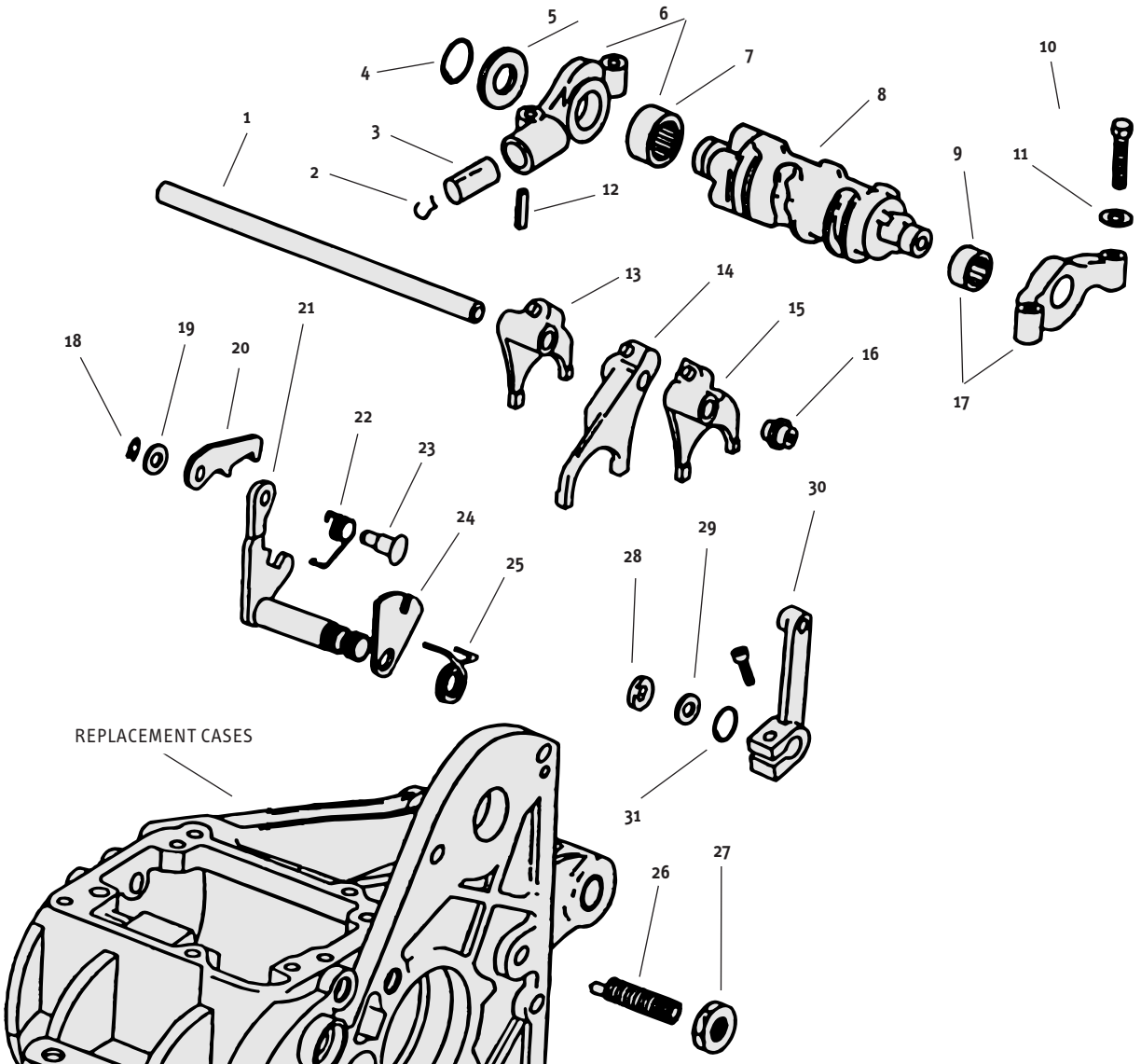

1	**96-638**	SHIFTER FORK SHAFT FOR 1987 & LATER **U.S.A. MADE** (OEM 34088-87)
2	**96-771**	SPRING (OEM 34089-79)
3	**96-695**	CAM FOLLOWER (OEM 34085-79A)
4	**96-759**	RET. RING (OEM 11083)
5	**THRUST WASHERS**	
	96-761	0.017 THICK (OEM 33205-80)
	96-762	0.020 THICK (OEM 33206-80)
	96-763	0.022 THICK (OEM 33207-80)
	96-764	0.025 THICK (OEM 33208-80)
	96-765	0.028 THICK (OEM 33209-80)
	96-766	0.031 THICK (OEM 33210-80)
	96-767	0.035 THICK (OEM 33211-80)
	96-768	0.039 THICK (OEM 33212-80)
6	**96-698**	SUPPORT WITH BEARING (OEM 33332-79A)
7	**95-599**	RIGHT SHIFTER CAM BEARING. TORRINGTON (OEM 9114)
8	**96-715**	CHROME HORSE® SHIFT CAM U.S.A. MADE (OEM 33320-79D)
9	**95-600**	LEFT SHIFTER CAM BEARING. TORRINGTON (OEM 9115)
10	**96-791**	BOLT (OEM 3993)
11	**96-758**	WASHER (OEM 6736)
12	**96-789**	PIN (OEM 601)
13	**96-701**	SHIFTER FORK (OEM 34195-79D)
14	**96-699**	SHIFTER FORK (OEM 34191-79D)
15	**96-700**	SHIFTER FORK (OEM 34193-79D)
16	**96-790**	SCREW (OEM 3784)
17	**96-696**	SUPPORT WITH BEARING (OEM 33326-79A)
18	**96-774**	RET. RING (OEM 11016)
19	**96-751**	WASHER (OEM 6016)
20	**96-704**	PAWL (OEM 34086-79)
21	**96-630**	SHIFTER SHAFT LEVER FOR 1986 & LATER (OEM 34084-86)
22	**96-769**	SPRING (OEM 34083-79)
23	**96-702**	PIN (OEM 34082-79)
24	**96-703**	PLATE (OEM 35068-79)
25	**96-770**	SPRING (OEM 34087-79A)
26	**96-680**	ADJUSTING SCREW (OEM 33119-79B)
27	**96-681**	JAM NUT (OEM 7515)
28	**95-787**	SEAL (OEM 12045)
29	**96-757**	WASHER (OEM 6497HW)
30	**96-652**	SHIFTER ROD LEVER FOR 1985 & LATER 5 SPD. CHROME (OEM 33715-85)
31	**96-760**	RET. RING (OEM 11150)

TRANSMISSION PARTS FOR BIG TWIN 4 SPEED ALL YEARS & MODELS

ALL PARTS SOLD EACH EXCEPT AS NOTED. SEE PERFORMANCE GEARS

1	96-122	OIL DEFLECTOR FOR 1979 & EARLIER (OEM 33429-39)
	96-408	OIL DEFLECTOR FOR 4 SPD. 1980 & LATER (OEM 33429-80)
2	96-591	BEARING RETAINING PLATE FOR 1936/1979 (OEM 35111-36)
3	96-416	MAINSHAFT BEARING NUT FOR 4 SPD. 1941 & LATER (OEM 35046-36)
4	96-334	LOCKWASHER (OEM 35050-40)
5	—	BEARING (OEM 9020)
6	95-423	MAINSHAFT BEARING HOUSING FOR 1937/1979 (OEM 35100-36)
	95-424	MAINSHAFT BEARING HOUSING FOR 1980/1985 (OEM 35100-79)
7	96-164	LOW & 2ND GEAR, 17 X 20T, FOR FX 1974/1979 (OEM 35282-74)
	96-471	LOW & 2ND GEAR, 15 X 20T, FOR FL 1959/1984, AND FX 1971/1973 (OEM 35282-59)
8	95-411	MAINSHAFT BUSHING FOR ALL 4 SPD. BIG TWIN 1941/E 1980 (OEM 37436-36)
9	96-71	MAINSHAFT FOR 1941/1964 (OEM 35040-50)
	96-152	MAINSHAFT FOR 1965/1969 (OEM 35039-65)
	96-153	MAINSHAFT FOR 1970 & LATER (OEM 35039-80)
10	96-163	3RD GEAR, 23T, FOR 1959 & LATER (OEM 35306-59)
11	95-230	BUSHING (OEM 35322-38)
12	95-375	WASHER (OEM 35365-36)
13	96-226	RETAINING RING (OEM 35337-36)
14	96-159	CLUTCH, MAINSHAFT (OEM 35440-38)
15	95-425	COUNTERSHAFT BUSHING (STARTER SIDE) FOR 1937/E 1976 (OEM 36046-36)
	95-426	COUNTERSHAFT BUSHING (STARTER SIDE) FOR L 1976/1979 (OEM 36045-76)
16	95-427	COUNTERSHAFT BUSHING (CLUTCH SIDE) FOR 1937/E 1976 (OEM 36048-36)
	95-428	COUNTERSHAFT BUSHING (CLUTCH SIDE) FOR L 1976/1986 AND (STARTER SIDE) FOR 1980/1986 (OEM 36048-76A)
17	96-311	RETAINING RING (OEM 35129-36)
18	95-309	RACE. CHECK FOR PROPER FIT - MAY NEED TO BE HONED (OEM 35125-37)
	95-312	RACE FOR 1941/E 1977. (OEM 35125-37)
19	95-229	BUSHING FOR 1965 & LATER (OEM 35094-65)
20	96-432	ROLLER BEARING RETAINER WASHER FOR 1936/E 1977 (OEM 35131-36)
21	96-422	GEAR SPACER KEY FOR 1941/E 1977 (OEM 35175-38)
22	96-410	MAIN GEAR SPACER FOR 1941E 1977 (OEM 35171-37)
23	95-767	CORK (OEM 35231-36)
24	96-161	MAIN DRIVE GEAR, FOR 1941/ EARLY 1977 (OEM 35065-65B)
	96-185	MAIN DRIVE GEAR, 26T, FOR L 1977/1981 USE WITH CAGED ROLLERS (OEM 35067-77)
25	95-327	OIL SEAL FOR L 1966/1981 (OEM 12022)
27	96-411	MAIN GEAR SPACER FOR LATE 1977/1979 (OEM 35070-77)
28	95-236	OIL SEAL FOR 4 SPD. 1941/E 1979 (OEM 35230-39)
	95-325	OIL SEAL FOR 4 SPD. L 1979/1981 (OEM 37741-67)
	95-783	OIL SEAL FOR 4 SPD. 1982/1985 (OEM 37741-82)
29	96-414	OIL DEFLECTOR PLATE FOR 1939/1964 (OEM 35159-39)
30	96-613	SCREW, BUMPER PLATE (OEM 1864B)
31	96-121	BUMPER PLATE (OEM 33353-36)
32	41-162	MAGNETIC 1/2-13 TRANS PLUG FOR BIG TWIN 4 SPD. 1941/1986 (OEM 707)
	41-983	1/2-13 TRANSMISSION PLUG. COLONY
33	41-25	WASHER. COLONY (OEM 62702-52)
34	96-590	TRANS STUDS: 1.625" LONG. FOR BOTTOM, FOR 1936/1983 (OEM 34724-36) SOLD AS PACK OF 4
36	78-447	GASKET FOR SPEEDO DRIVE (OEM 67141-36)
37	96-172	NUT (OEM 7911)
38	96-155	LOCK FOR 1936/1979 (OEM 33082-16)
39	96-479	COUNTERSHAFT END PLATE FOR 1941/1979 (OEM 35630-36)
40	96-231	ASSORTMENT OF THRUST WASHERS (OEM 35875-36) SOLD AS PKG.

THRUST WASHERS FOR H-D® 4 SPD. TRANSMISSION

THRUST WASHER ASSORTMENT, PART NO. **96-231** INCLUDES ONE EACH OF BELOW SIZES.

	96-444	THRUST WASHER, 0.074 (OEM 35876-36)
	96-445	THRUST WASHER, 0.078 (OEM 35877-36)
	96-446	THRUST WASHER. .082 (OEM 35878-36)
	96-447	THRUST WASHER. .085 (OEM 35879-36)
	96-448	THRUST WASHER. .090 (OEM 35882-36)
	96-449	THRUST WASHER. .095 (OEM 35883-36)
	96-450	THRUST WASHER. .100 (OEM 35884-36)
41	96-162	1ST GEAR, 24T, FOR FX 1974 & LATER (OEM 35717-74)
	96-345	1ST GEAR, 26T, FOR FLH 1941 & LATER, AND FX 1971/1973 (OEM 35765-36)
42	95-232	BUSHING (OEM 35789-36)
43	95-384	THRUST WASHER (OEM 35812-36)
44	96-158	COUNTERSHAFT CLUTCH (OEM 35665-36)
45	96-312	RETAINING RING (OEM 35810-36)
46	95-376	WASHER (OEM 35811-36)
47	96-166	2ND GEAR, COUNTERSHAFT, 21T, FOR 1936/1979 (OEM 35751-36)
48	—	BUSHING (OEM 35791-36)
49	95-372	COUNTER SHAFT BEARING FOR L 1976 & LATER (OEM 35961-52)
50	96-473	RETAINING RING FOR 1941/E 1976 OEM 35920-36)
51	96-165	COUNTERSHAFT GEAR, 15T & 17T, FOR FX 1976/1983, AND FLH 1981/1984 (OEM 35716-76T) - CAGE BEARING
	96-286	COUNTERSHAFT GEAR, 15T X 17T, FOR FLH 1969/E 1976, AND FX 1971/1976. NO SPEEDO DRIVE GEAR (OEM 35713-36T) - LOOSE BEARING
52	95-382	INNER THRUST WASHER (OEM 35917-36)
53	95-383	OUTER THRUST WASHER (OEM 35915-36)
54	96-19	COUNTERSHAFT FOR 1941/E 1976 (OEM 35614-65)
	96-160	COUNTERSHAFT FOR L 1976/ 1979 (OEM 35614-76)
	96-257	COUNTERSHAFT FOR 1980 & LATER (OEM 35614-80)
55	95-798	O-RING FOR 1965 & LATER (OEM 1115)

REBUILD KITS FOR BIG TWIN 4 SPEED TRANSMISSION

For all 4 speed transmissions 1936 thru 1986. We use Jims proven transmission parts to start with, then top off with a James Gasket Set. All together in one neat package, it is a big time saver. **NOTE:** Pre 1977 kits include a standard size race, OEM 35125-37.

96-581	Fits 1936 thru early 1976.	SOLD AS KIT
96-582	Fits late 1976 thru early 1977.	
96-583	Fits late 1977 thru 1979.	
96-584	Fits 1980 thru 1986.	

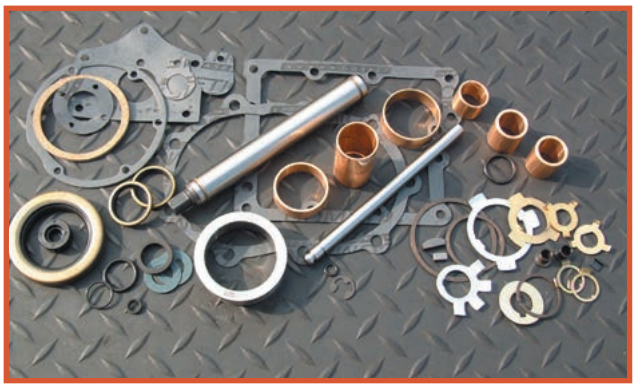

TRANSMISSION PARTS FOR BIG TWIN 4 SPEED ALL YEARS & MODELS

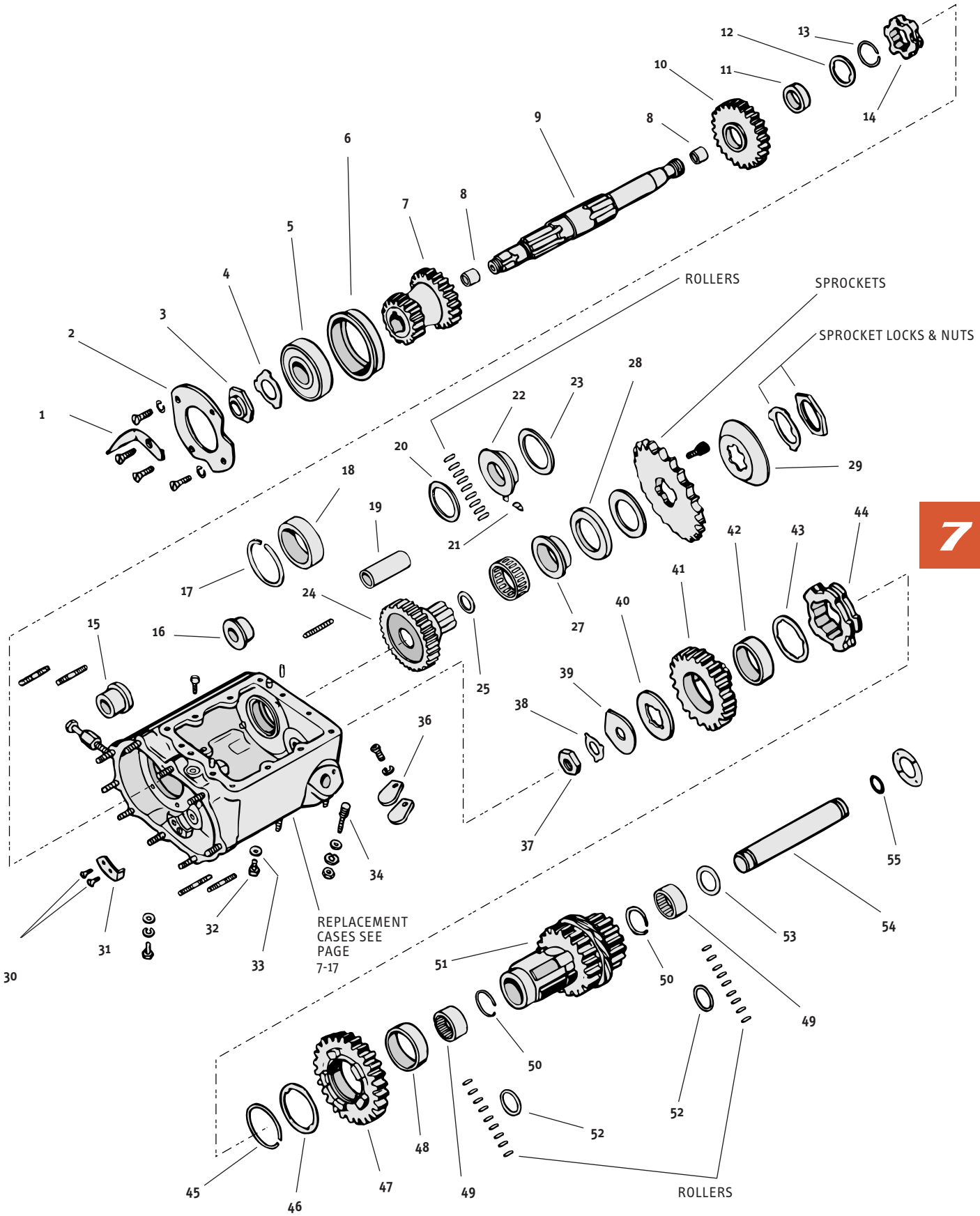

TRANSMISSION PARTS FOR SPORTSTER® & KH MODELS ALL MODELS 1990 & EARLIER

ALL PARTS SOLD EACH EXCEPT AS NOTED

1	**96-586**	RETAINING RING 1952/1985 (OEM 35112-52)
2	**95-316**	BEARING (OEM 9025 & 37906-84)
3	**95-770**	OIL SEAL (OEM 37531-56B)
4	**95-322**	O-RING (OEM 11103)
5	**95-372**	NEEDLE BEARING 1954 & LATER (OEM 35961-52)TWO REQUIRED FOR LATE 1984 & LATER
6	—	STOCK RATIO CLUTCH GEAR 1971/1978. IMPORTED (OEM 37448-71)
7	**96-69**	2ND GEAR 23 TEETH (OEM 35296-56)
8	**96-483**	RETAINING RING 1956 & LATER (OEM 35337-56)
9	**96-503**	THRUST WASHER MAINSHAFT 3RD GEAR (OEM 35364-56)
10	**96-70**	3RD GEAR 20 TEETH (OEM 35305-56)
11	**96-313**	MAINSHAFT KH, XL, XLH, XLCH 1956/1966, XLCH (ENG. NO. 56KH-1465) 1967/1969
	96-315	MAINSHAFT XLH, XLCH 1971/MID 1984 (OEM 35046-71A)
12	**96-169**	LOW GEAR 27 TEETH (OEM 35277-52A)
13		**U.S.A. MADE** THRUST WASHERS FOR MAINSHAFT RIGHT 1986 & LATER
	96-521	0.0965". (OEM 35380-84)
	96-522	0.0905" (OEM 35381-84)
	96-523	0.0845" (OEM 35382-84)
	96-524	0.0795" (OEM 35383-84)
	96-525	0.0727" (OEM 35384-84)
	96-526	0.0675" (OEM 35385-84)
14	**96-281**	RACE (OEM 35105-52)
15	**96-502**	THRUST WASHER MAINSHAFT ROLLER BEARING (OEM 35362-52)
16	—	RIGHT MAIN SHAFT CASE BEARING LATE 1984/1990. TORRINGTON (OEM 9118)
17	**95-766★**	GASKET FOR SPORTSTER® 1952/1983 (OEM 35169-52) SOLD AS PKG. OF TEN
18	**77-170**	SEAL & RETAINER KIT EARLY 1984 & EARLIER (OEM 35150-52) SOLD AS KIT
19	**95-328**	OIL SEAL 1954/E 1984 (OEM 35151-52A)
	95-324	OIL SEAL L 1984 & 1985 (OEM 35151-74)
	95-735	OIL SEAL 1986/1990 (OEM 12049)
20	—	LOCK (OEM 35050-52)
21	**96-482**	MAINSHAFT NUT 1954/1970 (OEM 35047-53)
	96-338	MAINSHAFT NUT 1971 & LATER (OEM 35047-71A)
22	**96-236**	DRIVE GEAR 27 TEETH (OEM 35695-58)
23	**96-505**	COUNTERSHAFT SPACER (OEM 35809-58)
24	**96-327**	2ND GEAR 20 TEETH (OEM 35750-58)
25	—	THRUST WASHER 2ND GEAR (OEM 35841-58)
26	**96-234**	COUNTERSHAFT 1956/MID 1984 (OEM 35613-58)
27	**96-265**	3RD GEAR 23 TEETH (OEM 35709-54A)
28		**U.S.A. MADE** THRUST WASHERS FOR COUNTERSHAFT LOW GEAR LEFT 1955/EARLY 1984
	96-498	0.065" (OEM 35840-52)
	96-499	0.075" (OEM 35836-55)
	96-500	0.085" (OEM 35838-55)
	96-501	0.100" (OEM 35839-55)
29	**95-394**	NEEDLE BEARING LATE 1984 & LATER (OEM 8888)
30	**96-474**	COUNTERSHAFT LOW GEAR 1973/E 1984 (OEM 35760-73)
31		U.S.A MADE THRUST WASHERS FOR COUNTERSHAFT LOW RIGHT 1954/1985
	96-486	0.020" (OEM 35818-72)
	96-487	0.025" (OEM 35327-73)
	96-488	0.030" (OEM 35819-72)
	96-489	0.035" (OEM 35328-73)
	96-490	0.040" (OEM 35821-72)
	96-491	0.045" (OEM 35329-73)
	96-492	0.050" (OEM 35820-52)
	96-493	0.055" (OEM 35821-52)
	96-494	0.060" (OEM 35824-52)
	96-495	0.065" (OEM 35825-52)
	96-496	0.070" (OEM 35828-52)
	96-497	0.075" (OEM 35829-52)
32	**95-395**	CLOSED END BEARING 1954 & LATER (OEM 35960-54)

TRANSMISSION PARTS FOR SPORTSTER® & KH MODELS ALL MODELS 1990 & EARLIER

AL PARTS SOLD EACH EXCEPT AS NOTED

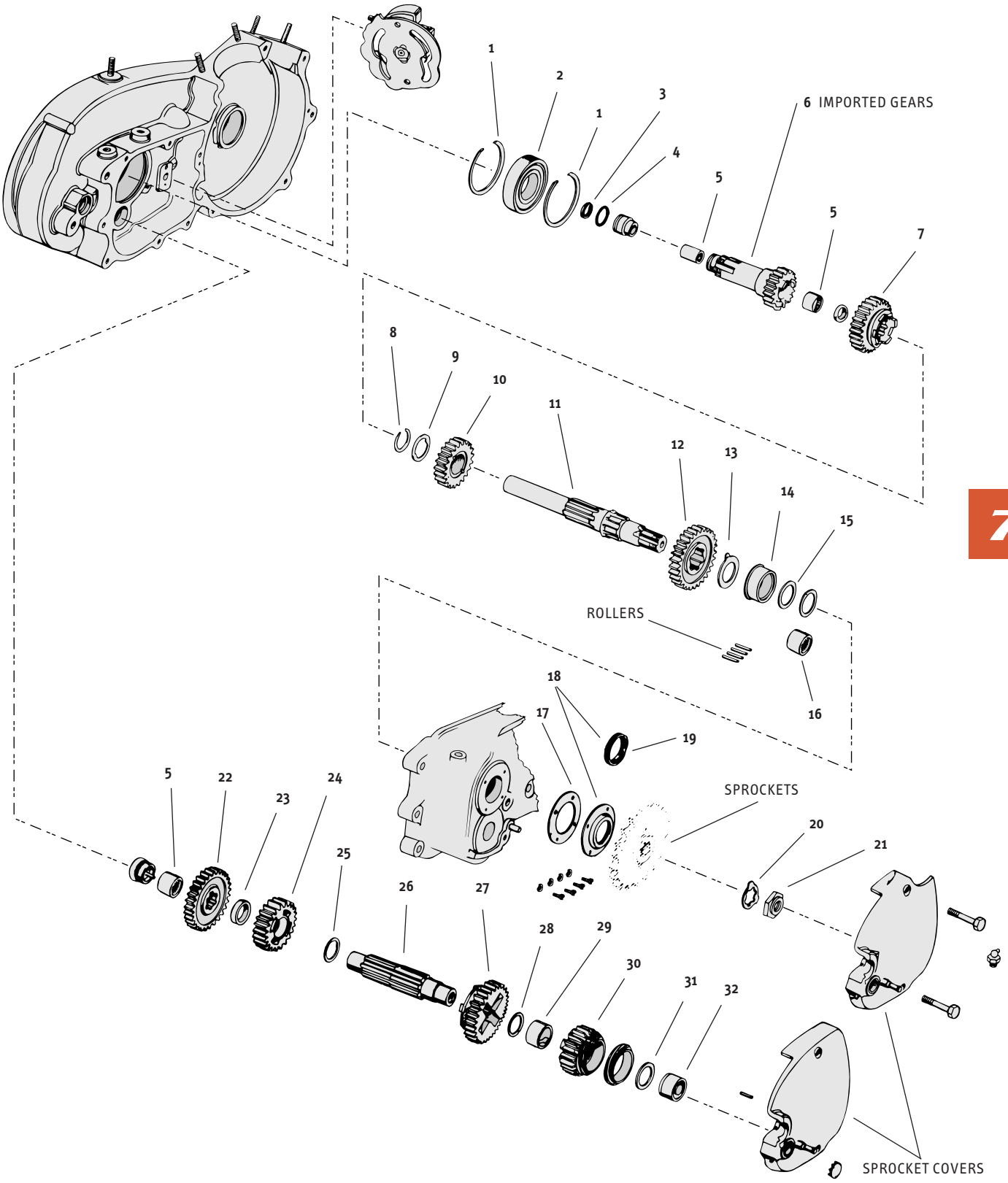

TRANSMISSION PARTS FOR 5 SPEED SPORTSTER® 1991 & LATER

AL PARTS SOLD EACH EXCEPT AS NOTED

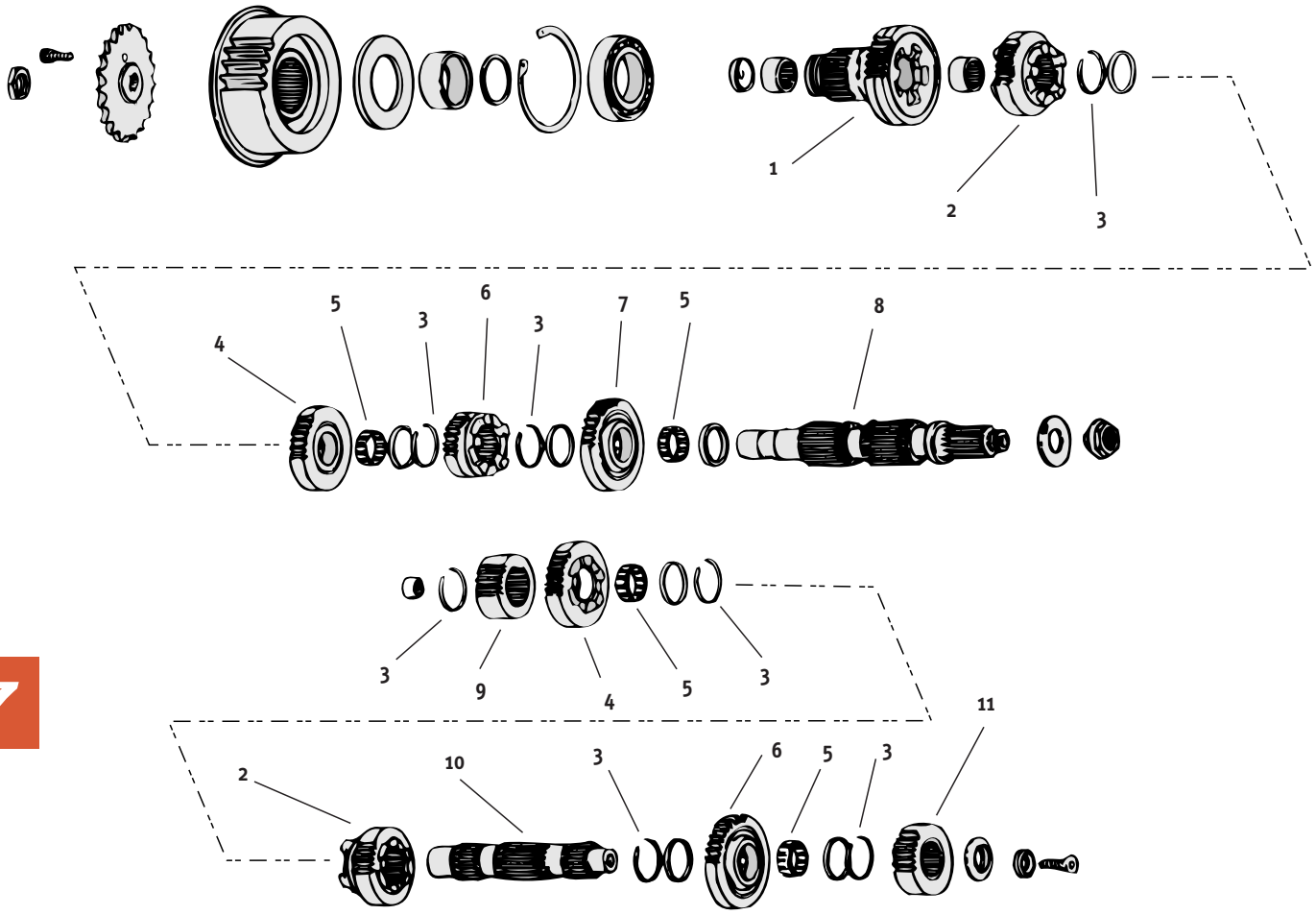

1	--------	MAIN DRIVE GEAR. (OEM 35034-89)
2	**96-570**	2ND MAIN 3RD COUNTER GEAR (OEM 35771-89)
3	**96-621**	RETAINING RING (OEM 11067)
4	--------	3RD MAIN 2ND COUNTER GEAR. (OEM 35772-89)
5	**96-608**	BEARING (OEM 8876A) SOLD EACH
6	--------	2.61 CLOSE RATIO 1ST GEAR SET. SOLD AS SET
7	**96-575**	4TH MAIN. (OEM 35773-89)
8	--------	MAINSHAFT. (OEM 35640-89)
9	--------	COUNTER DRIVE GEAR. (OEM 35633-89)
10	--------	COUNTER SHAFT. (OEM 35641-89)
11	**96-576**	4TH COUNTER GEAR. (OEM 35775-89)



96-162

A. MIDWEST CLOSE RATIO 1ST GEARS FOR BIG TWIN 1984 & EARLIER 4 SPEED

Midwest gear sets exceed OEM specifications & the products are warranted 100% against defects in materials or workmanship. Make that Hog® gear-box shift like a Sportster®. Faster acceleration thru 1st & 2nd. A must for all performance 74"s.

96-164 Low and 2nd gear. 17 x 20T. SOLD EACH
96-162 Low gear counter shaft. 24T. SOLD EACH

***NOTE:** 1936 Thru 1958 must use OEM 35306-59 mainshaft 3rd. 1980 Thru 1984 must use OEM 35751-36 2nd gear. 2.44:1 Recommended for lighter bikes (FX). 2.60:1 Recommended for heavier bikes (FLH).

TRANSMISSION GASKET REFERENCE

Some of the gaskets and seals in our transmission sets are **SOLD EACH** and some are **SOLD AS PKG** (with various quantities). Order by the Midwest part number indicated below the OEM number on the chart below; ask your sales rep how they're sold. IF THERE IS NO MIDWEST PART NUMBER THEN THAT PART IS NOT AVAILABLE. PARTS NOT SHOWN TO SCALE.

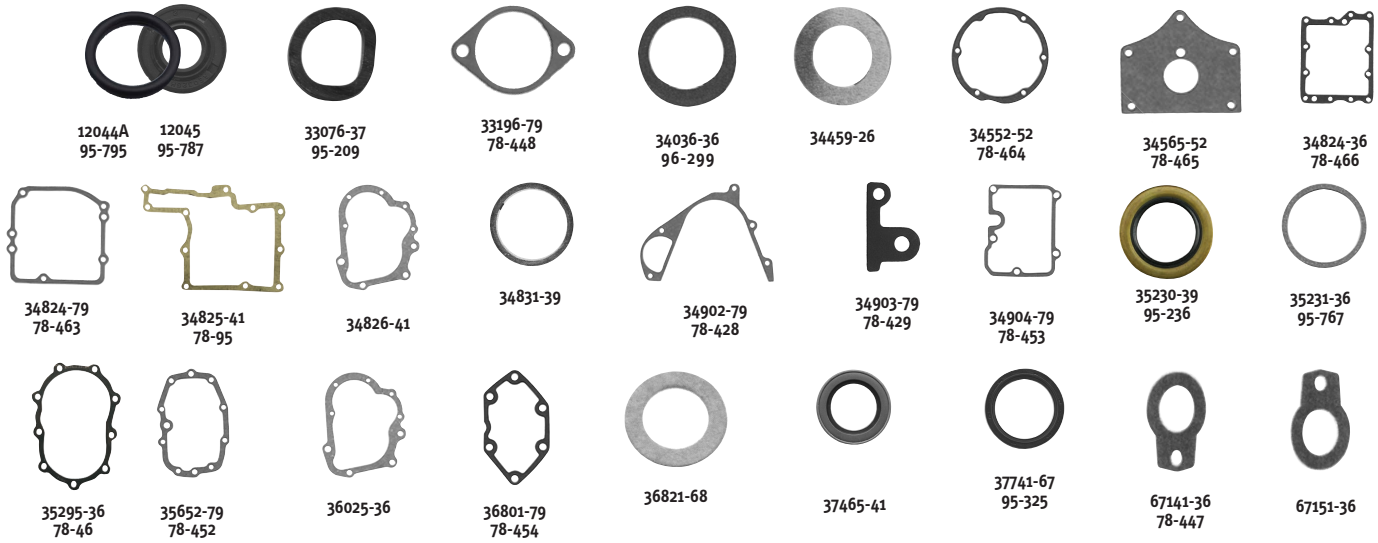

PART NO.	YEAR	APPLICATION	REPLACES OEM NO.
77-349	1970 thru early 1979	Big Twin.	33031-70
77-350	late 1979 thru 1982	Big Twin 4 speed.	33031-80
77-351	1980 thru early 1984	Big Twin 5 speed.	33031-82
77-352	late 1984 thru 1992	Big Twin (except FLT & Dyna®).	33031-85
77-353	1991 & later	Dyna® and FXDB-S.	33031-91
77-354	1993 thru 1998	Evolution® FLT, FXR, Dyna® & Softail®.	33031-93
77-399	1999	TC88™ Dyna®.	
77-400	1999	TC88™ FLT.	
77-482	2006 & later	Dyna® models.	
77-483	2007 & later	Softail® models.	
77-484	2007 & later	FL models.	

COMETIC GASKET

COMPLETE TRANSMISSION GASKET KITS

Contains all of the necessary gaskets, seals, and O-rings to completely rebuild the transmission. Contains end cover and top cover gaskets and all washers needed.

SOLD AS KIT

7

TRANSMISSION GASKETS FOR BIG TWIN
1936 THRU 1964

Various gaskets for those early Knuckles, Pans and Flathead transmissions (fits FL, FLH, U, UL, ULH & EL, 1936 thru 1964. Some gaskets are **SOLD EACH** and some are **SOLD AS PKG**. Ask your sales rep.

QTY.	OEM NO.	MIDWEST PART NO.	DESCRIPTION
1	11115	95-798	Counter shaft O-ring.
1	33076-37	95-209	Starter shaft seal.
1	33295-36	78-46	Kicker cover gasket.
2	34036-36	96-299	Shifter shaft seals.
1	34552-52	78-464	Shifter cover gasket.
1	34565-52	78-465	Shifter cover gasket (inner).
1	34824-36	78-466	Top cover gasket.
1	35230-39	95-236	Main drive gear oil seal.
1	35231-36	95-767	Cork washer.
1	67141-36	78-447	Speedometer drive gasket.

TRANSMISSION GASKETS FOR BIG TWIN
1965 THRU 1969

Various transmission gasket & seals for pre-1970 models — early model Shovel and the last year Pan (fits FL & FLH 1965 thru 1969). Some gaskets are **SOLD EACH** and some are **SOLD AS PKG**. Ask your sales rep.

QTY.	OEM NO.	MIDWEST PART NO.	DESCRIPTION
1	11115	95-798	O-ring counter shaft.
1	12014	95-778	Oil seal clutch hub nut.
1	12022	95-327	Mainshaft oil seal.
1	33076-37	95-209	Starter crankshaft seal.
1	33295-36	78-46	Kicker cover gasket.
2	34036-36	96-299	Shifter shaft seals.
1	34552-52	78-464	Shifter cover gasket.
1	34565-52	78-465	Shifter cover gasket (inner).
1	34824-36	78-466	Top cover gasket.
1	35230-39	95-236	Main drive gear oil seal.
1	35231-36	95-767	Cork washer.
1	67141-36	78-447	Speedometer drive gasket.

TRANSMISSION GASKETS FOR BIG TWIN 1970 THRU 1979

Made just for 1970 thru 1979 models (fits FL, FLH, FLH-80, FX & FXS, 1970 thru 1979. Some gaskets are **SOLD EACH** and some are **SOLD AS PKG**. Ask your sales rep.

QTY.	OEM NO.	MIDWEST PART NO.	DESCRIPTION
1	11115	95-798	Counter shaft O-ring.
1	12014	95-778	Oil seal clutch hub nut.
1	12018	95-223	Inner chain cover oil seal.
1	12022	95-327	Oil seal, MAINSHAFT.
1	33076-37	95-209	Starter crankshaft seal.
1	33295-36	78-46	Kicker cover gasket
1	34552-52	78-464	Shifter cover gasket.
1	34565-52	78-465	Shifter cover gasket (inner).
1	34824-36	78-466	Top cover gasket.
1	35230-39	95-236	Main drive gear2-lip oil seal.
1	35231-36	95-767	Oil seal cork washer*.
1	35607-73	—	Speedo plate gasket, FX & FXE.

***NOTE:** OEM No. 35231-36 cork washer is not used on late 1977 & later transmissions. Please discard this part if not needed.

TRANSMISSION GASKETS FOR BIG TWIN 4 SPEED 1980 & LATER

7

Various gaskets for the 1980 & later 4 speed 80" transmission. The changes include new top plate gasket, shifter cover gasket and oil seal, smaller main drive gear oil seal, and new shifting fork shaft oil seal (fits 4 speed FL, FLH, FLH-80, FX, FXS & FXE/F, 1980 & later). Some gaskets are **SOLD EACH** and some are **SOLD AS PKG**. Ask your sales rep.

QTY.	OEM NO.	MIDWEST PART NO.	DESCRIPTION
1	11115	95-798	O-ring, counter shaft.
1	12010	—	Shifter cover oil seal.
1	12014	95-778	Oil seal, clutch hub nut.
1	12022	95-327	4th Gear seal.
1	33076-37	95-209	Oil seal, kicker cover.
1	33196-79	78-448	Gasket, shifter cover.
1	33295-36	78-46	Gasket, kicker cover.
2	34036-36	96-299	Shifter shaft seals.
1	34824-79	78-463	Top cover gasket.
1	37741-67	95-325	Oil seal, main drive.
1	67141-36	78-447	Gasket, speedometer drive gear.

TRANSMISSION GASKETS FOR H-D®45" SOLO & SERVI-CAR 1941 THRU 1973

Transmission gaskets for the 45" V-Twins. Used on Solo & Servi-Cars 1941 thru 1973.

SOLD EACH

QTY.	OEM NO.	MIDWEST PART NO.	DESCRIPTION
1	34825-41	78-95	Top plate cover gasket.

TRANSMISSION GASKETS FOR BIG TWIN 5 SPEED FLT, FLHT, FXR & FXRS, 1980 THRU 1984

Various gaskets for 5 speed transmission 1979 thru 1984. Some gaskets are **SOLD EACH** and some are **SOLD AS PKG**. Ask your sales rep.

QTY.	OEM NO.	MIDWEST PART NO.	DESCRIPTION
1	12013	—	Drive gear seal.
1	12014	95-778	Clutch nut seal.
1	12045	95-787	Shift shaft seal.
1	25811-11	—	Fiber washer.
1	34902-79	78-428	Inner primary cover gasket.
1	34903-79	78-429	Chain cover gasket.
1	34904-79	78-453	Top cover gasket.
1	35652-79	78-452	Bearing housing gasket. Pkg. 10
1	35652-79	78-452A	Bearing housing gasket. EA
1	36801-79	78-454	Release cover gasket.

TRANSMISSION GASKETS FOR ALL BIG TWIN 5 SPEED 1985 & LATER

Various gaskets for 5 speed transmission 1985 & later. Some gaskets are **SOLD EACH** and some are **SOLD AS PKG**. Ask your sales rep.

QTY.	OEM NO.	MIDWEST PART NO.	DESCRIPTION
2	34036-36	96-299	Shifter shaft seals.
1	12045	95-787	Shift shaft seal.
1	12050	95-736	Mainshaft seal.
1	12051	95-788	Trans to starter seal.
1	12052	95-380	Inner primary seal.
1	34902-79	78-428	Inner primary cover gasket.
1	34903-79	78-429	Chain cover gasket.
1	34904-79	78-485	Top cover gasket.
1	34904-86	78-461	Top cover gasket. EA
1	34904-86	78-461A	Top cover gasket. EA
1	35652-79	78-452	Bearing housing gasket. Pkg.10
1	35652-79	78-452A	Bearing housing gasket. EA
1	36801-79	78-454	Release cover gasket.
1	36801-87	78-455	Release cover gasket. Pkg 10
	36801-87	78-455A	Release cover gasket. EA

TWIN CAM TRANSMISSION GASKET & SEAL KIT

NEW!



Twin Cam Transmission Gasket & Seal Kit

95-2 Includes Transmission O-Rings (x3),
Transmission Main Drive Seal,
Main Drive Gear Oil Seal,
Clutch Cover Gasket,
Top Cover Gasket,
Bearing Housing Gasket

A. *OFFSET TRANSMISSION BASE PLATES*

BIG TWIN 5 SPEED

Offset transmission base plates help move the driveline over to the left for use with wide tires when being used with rear belt drives.

96-838 1/4" Offset plate. SOLD EACH
96-840 1/2" Offset plate.
96-862 3/4" Offset plate.
96-850 1" Offset plate.

A

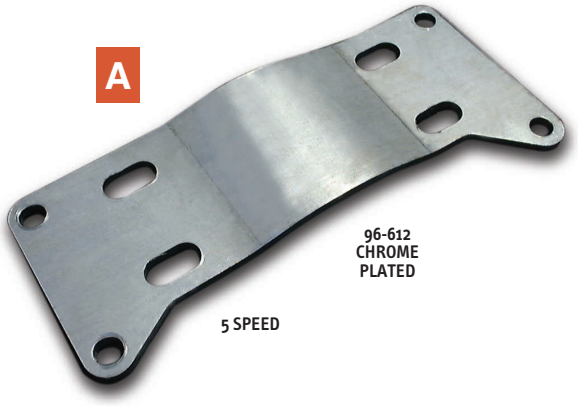

96-612
CHROME
PLATED

5 SPEED

B. *TRANSMISSION MOUNTS*

Reproduction of early style H-D® trans mounting plate. Solid steel laminated 1/2" thick. Chrome plated. Works on rigid or swing arm frames. Replaces OEM 47698-36A & 47698-65.

96-612 Fits 1986 & later Softail® models. SOLD EACH
Replaces OEM 47698-86B.

B

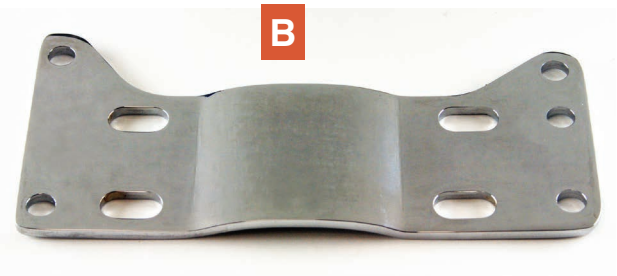

C. *CHROME BILLET GEAR BOX BREATHER*

Our new gearbox breather is fully machined from billet aluminum and then show chrome plated. Simple — just install to your existing gearbox overflow vent hose. Sponge inside holds excess oil and keeps it away from the rear wheel & tire.

25-107 Golan Products billet gearbox breather. SOLD EACH

C



CHROME
PLATED

D. *FLT OIL SPOUT SPACER*

89-14 15/16" spacer for FLT oil spout/filler. Spaces filler spout out farther to clear a larger starter. Gaskets and hardware not included. SOLD EACH
77-884 93'-99 FLT Oil Filler Spout Gasket, OEM 62432-93. SOLD EACH

D

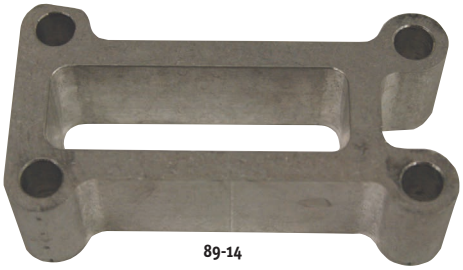

89-14

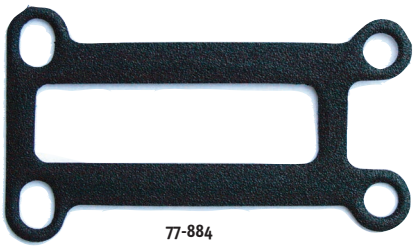

77-884

7

SHIFTER PARTS FOR BIG TWIN 1936 THRU EARLY 1979 ALL PARTS SOLD EACH EXCEPT AS NOTED

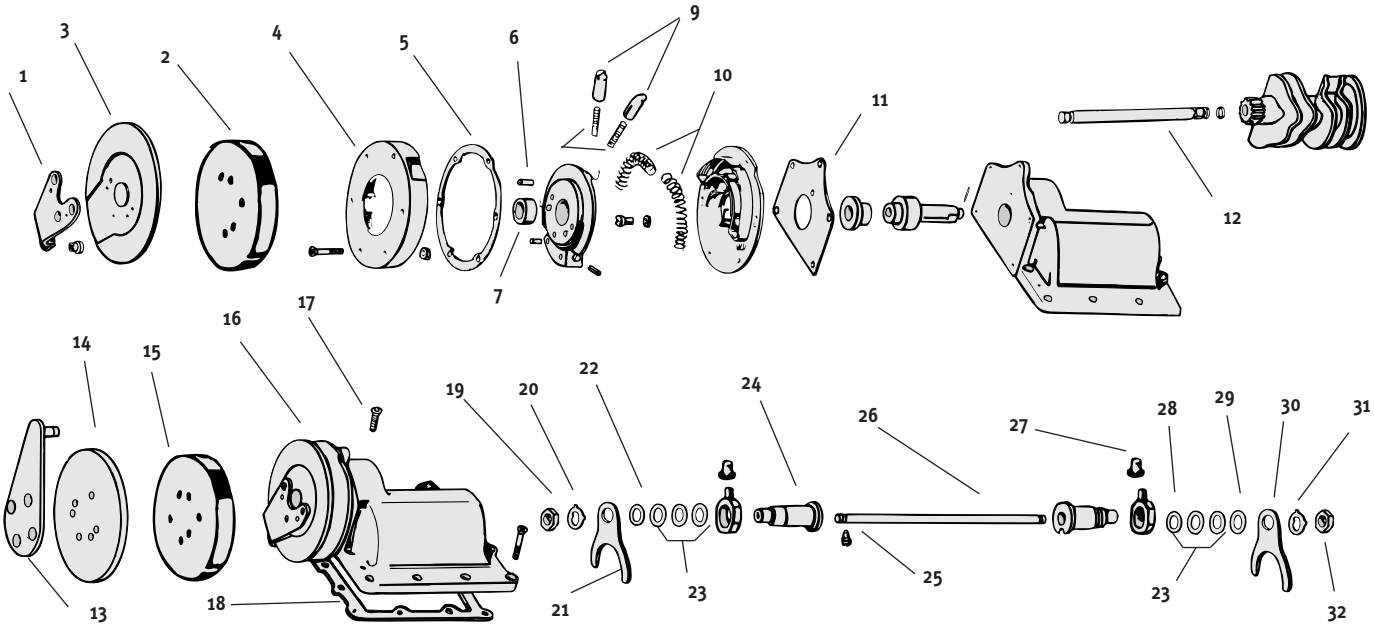

7 A



A. COMPLETE RATCHET TOP ASSEMBLIES

For 1952 thru early 1979. Replaces OEM 34799-65

96-464 With chrome plated cover. SOLD AS KIT

B

PLAIN METAL



17-72



17-703

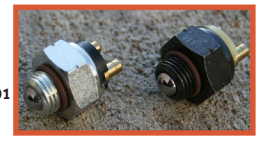

17-701

17-702

B. TRANSMISSION NEUTRAL SWITCHES

17-72 Replaces OEM 33900-59. Fits FL & FLH 1959 thru 1964, FX late 1973 thru early 1979, FXST 1986, FLT/FXR/FXST/FLST 1987-1997, XL 1986-1998.

17-703 Replaces OEM 33901-79. Fits Big Twin 4 speed 1979 & later.

17-702 Replaces OEM 33904-00. Fits Softail® 2000/2006, 2001/2005 Dyna® and Touring models 2001/2006.

17-701 Replaces OEM 33902-98. Fits Softail® 1998/2000, Dyna® and FLT 1998 thru 2000, and V-Rod 2008.

1	47-63	LEVER. CHROME (OEM 34447-52)
2	89-214	FULL DUST COVER FOR FLH 1952/EARLY 1979. CHROME
3	96-108	DUST COVER FOR FLH 1952/EARLY 1979. CHROME (OEM 34555-52)
4	96-268	COVER (OEM 34551-52)
5	78-464	GASKET (OEM 34552-52)
6	—	CARRIER PIN FOR 1952/EARLY 1979 (OEM 9106A)
7	96-792	BUSHING (OEM 34498-52)
9	96-555	SHIFTER PAWLS LEFT OR RIGHT LATE 1975/1979 (OEM 34478-75) ALSO USED ON MIDWEST RATCHET TOP PART NO. **96-464**. SOLD AS PAIR
	96-100	SHIFTER PAWL LEFT FOR 1952/EARLY 1975 (OEM 34477-53) SOLD EACH
	96-101	SHIFTER PAWL RIGHT FOR 1952/EARLY 1975 (OEM 34478-53) SOLD EACH
10	96-550	SPRING FOR 1952/EARLY 1979 (OEM 34500-52A)
11	78-465	GASKET (OEM 34565-52)
12	96-434	SHIFTER CAM SHAFT FOR 1952/EARLY 1979 (OEM 34031-41)
13	47-160	FOR FX 1974/EARLY 1979. CHROME (OEM 34447-74)
14	96-539	DUST COVER FOR FX 1974/EARLY 1979 (OEM 34555-74)
15	89-215	FULL DUST COVER FOR SUPER GLIDE® 1974/EARLY 1979. CHROME
16	96-464	CHROME COMPLETE RATCHET TOP ASSY. FOR 1952/EARLY 1979 (OEM 34799-65) SOLD AS KIT
17	96-201	SCREW (OEM 2333W) USE TWO
18	78-466	GASKET (OEM 34824-36)-SOLD AS PKG
	78-47	GASKET (OEM 34824-36)-SOLD EACH
19	96-421	SHIFTER FORK NUT FOR 1941/EARLY 1979 (OEM 34179-33)
20	96-413	SHIFTER FORK LOCK FOR ALL 4 SPD. (OEM 34180-33)
21	96-130	COUNTER SHAFT SHIFTER FORK (OEM 34159-36)
22	96-596	THRUST WASHER (OEM 6754)
23	96-594	SHIM + 0.007 (OEM 6750)
	96-595	SHIM + 0.014 (OEM 6752)
24	96-406	SHIFTER FORK BUSHING FOR 1941/EARLY 1979 (OEM 34175-36)
25	96-598	SHIFTER SHAFT LOCK SCREW FOR 1936/EARLY 1976 (OEM 34050-36)
26	96-348	FORK SHAFT FOR 1936/1978 (OEM 34186-76)
27	96-293	SHIFT FINGER ROLLER FOR 1941/1979 4 SPD. (OEM 34168-39) SOLD AS PAIR
28	96-407	SHIFTER FINGER FOR 1941/EARLY 1979 (OEM 34165-36)
29	96-596	THRUST WASHER (OEM 6754)
30	96-129	MAINSHAFT SHIFTER FORK (OEM 34158-36)
31	96-413	SHIFTER FORK LOCK FOR ALL 4 SPD. (OEM 34180-33)
32	96-421	SHIFTER FORK NUT FOR 1941/EARLY 1979 (OEM 34179-33)

SHIFTER PARTS FOR 80 C.I. 4 SPEED LATE 1979 THRU 1984

ALL PARTS SOLD EACH EXCEPT AS NOTED SEE SECTION 4 FOR FOOT & HAND SHIFT PEGS, LEVERS & RODS

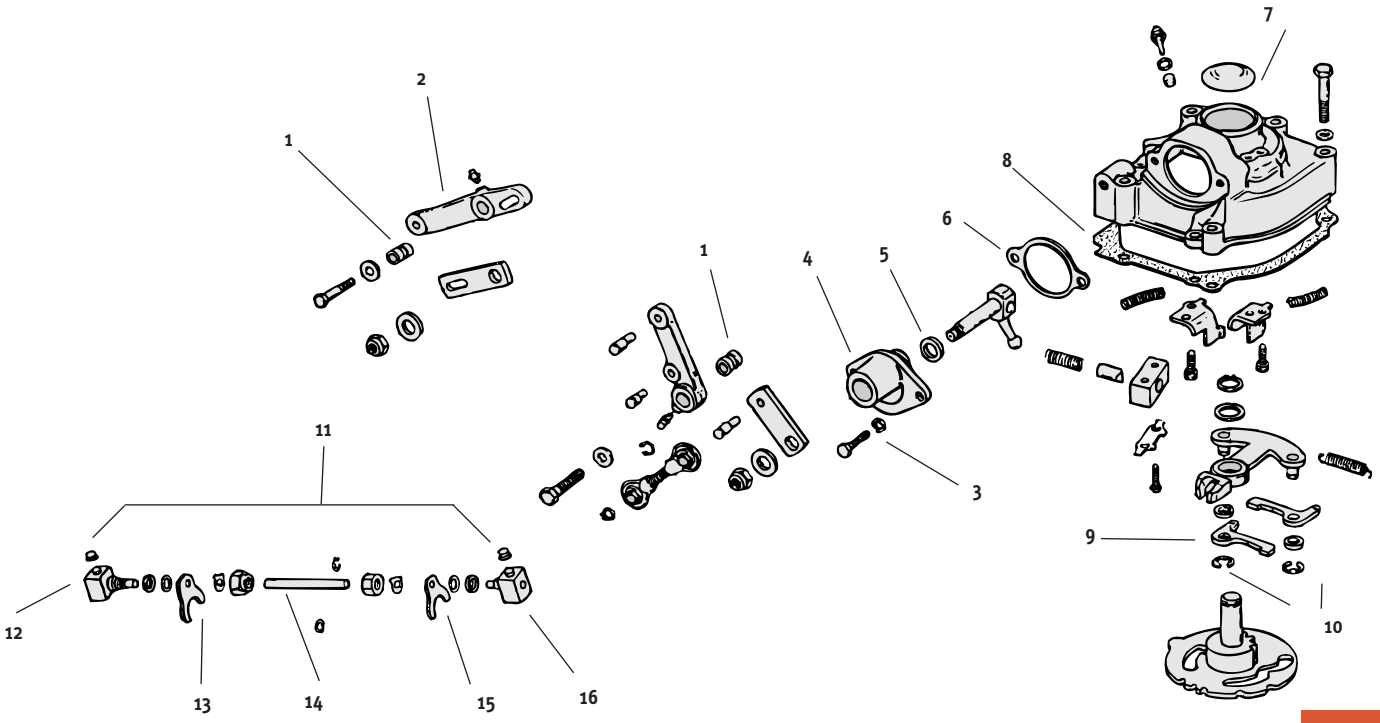

1	**96-484**	SHIFT LEVER SPACER REBUILDS WORN SHIFT LEVER ARMS 1979/1984 4 SPD. REPLACES OEM 33187-79
	96-485	OVERSIZE SHIFT LEVER SPACER REBUILDS WORN SHIFT LEVER ARMS 1979/1984 4 SPD. REPLACES OEM 33187-79
2	**96-607**	FORWARD SHIFTER. CHROME STEEL (OEM 34177-79)
3	**96-241**	1/4" LOCKWASHER FOR ALL MODELS 1979/1983 (OEM 7036) USE 2
4	**96-605**	SHIFTER SHAFT COVER. CHROME (OEM 33174-79)
5	**95-779**	FOOT SHIFT COVER OIL SEAL FOR FX, FL & FLH-80 CLASSIC LATE 1979 & LATER (OEM 12010) SOLD AS PKG OF 5
6	**78-448**	GASKET FOR ALL MODELS 1979/1983 (OEM 33196-79)
7	—	CHROME HORSE® STAINLESS STEEL TRANSMISSION SHIFTER COVER ALLEN SCREW KIT FOR FX & FL 4 SPD. 1980/1986
8	**78-463**	GASKET FOR ALL MODELS 1979/1983 (OEM 34824-79)
9	**96-533**	SHIFTER PAWL FOR LATE 1979/1984 (OEM 34476-72)
10	**47-103**	SHIFTER PAWL RET. RING FOR ALL MODELS 1979/1983 (OEM 11036) USE 2
11	**96-294**	SHIFT FINGER ROLLER FOR 1979 & LATER (OEM 34168-52) SOLD AS PAIR
12	—	SHIFT FINGER FOR LATE 1979/1984 (OEM 34184-79) USE 2
13	**96-129**	MAINSHAFT SHIFTER FORK (OEM 34158-36)
14	**96-348**	FORK SHAFT FOR 1979/1984 4 SPD. (OEM 34186-76)
15	**96-130**	COUNTER SHAFT SHIFTER FORK (OEM 34159-36)
16	—	SHIFT FINGER FOR LATE 1979/1984 (OEM 34184-79) USE 2

SHIFTER PARTS FOR SPORTSTER® AND KH MODELS, 4 SPEED TRANSMISSION

ALL YEARS & MODELS

ALL PARTS SOLD EACH EXCEPT AS NOTED SEE SECTION 4 FOR FOOT & HAND SHIFT PEGS, LEVERS & RODS

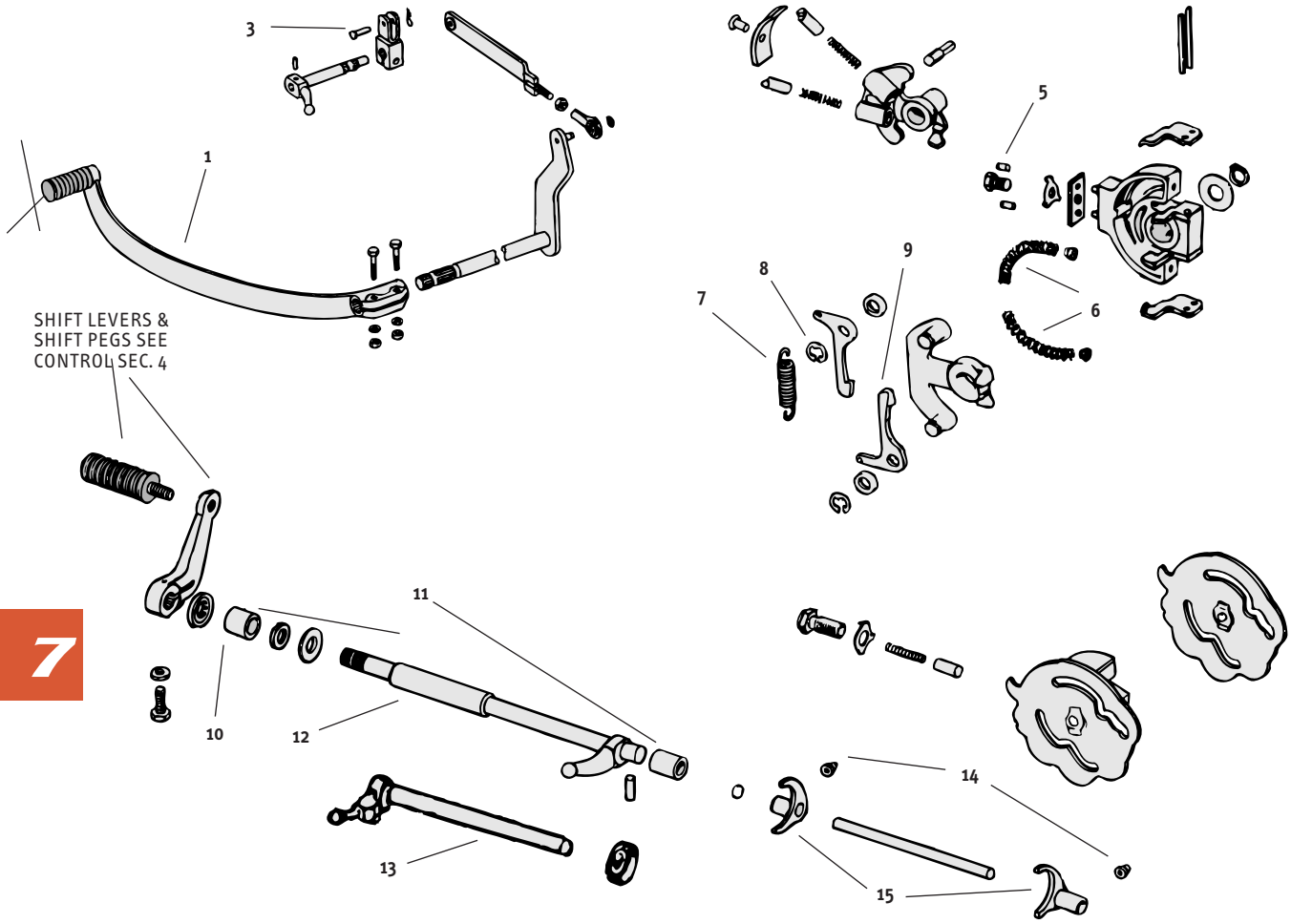

1	--------	SHIFT LEVER FOR 1975 & 1976 (OEM 34666-75)
3	**90-68**	SHIFTER LINK PIN FOR 1975 & 1976 (OEM 42269-30)
5	**95-219**	PIN FOR 1954/1971 (OEM 9261)
6	**96-550**	SPRING FOR 1954/EARLY 1978 (OEM 34500-52A)
7	**96-235**	SPRING FOR 1972 & LATER (OEM 37222-52)
8	**47-103**	RET. RING FOR 1972/1981 (OEM 11036)
9	**96-533**	SHIFTER PAWL FOR 1972/1990 (OEM 34476-72)
10	**95-346**	BUSHING FOR 1954/1974 (OEM 34037-52) USE 2
11	**95-412**	SHIFTER SHAFT BUSHING FOR RIGHT CASE 1977/1990 & PRIMARY COVER 1991 & LATER (OEM 40520-63)
12	**96-321**	SHIFTER SHAFT FOR 1977/1985 (OEM 34628-75)
13	**96-295**	SHIFTER SHAFT FOR 1954/1974 (OEM 34628-54)
14	**96-294**	SHIFT FINGER ROLLER FOR 1954/ 1990 (OEM 34168-52) SOLD AS PAIR
15		SHIFTER FORKS 1954/1990 (OEM 34291-52C)
	96-540	STANDARD. BRASS
	96-283	STANDARD. STEEL

KICKSTART PARTS FOR 900CC & 1000CC SPORTSTER® ALL YEARS

ALL PARTS SOLD EACH EXCEPT AS NOTED

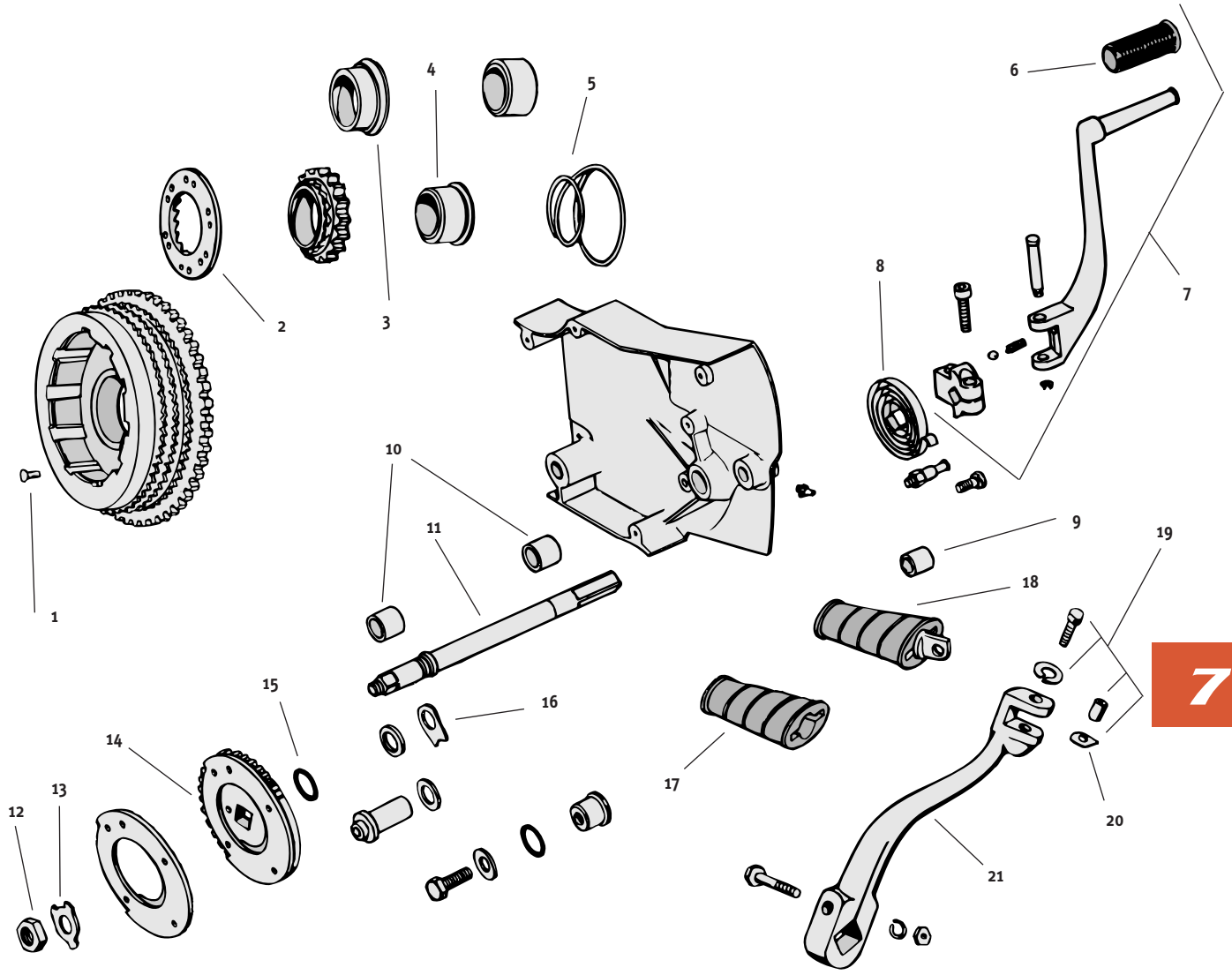

1	96-349	RIVET FOR 1954/1970 (OEM 8215)
2	96-276	STARTER RATCHET FOR 1957/1970 (OEM 33379-57
	96-287	STARTER RATCHET FOR 1971/EARLY 1979 (OEM 33379-71A)
3	95-314	KICKER GEAR BUSHING FOR 1957/EARLY 1973 (OEM 33442-52)
4	96-375	SHORT SPACER FOR 1957/1970 (OEM 37754-74)
	96-290	LONG SPACER FOR 1973 & LATER (OEM 37755-73)
5	96-343	RATCHET SPRING FOR 1954 & LATER (OEM 33391-52)
6	--------	LATE KICK PEDAL REPLACEMENT COVER FOR XL 1963 & LATER, FX 1971 & LATER. BLACK RUBBER (OEM 33189-63)
7	47-93	KICK ARM ASSY. CHROME. COMPLETE WITH BRACKET & BLACK RUBBER
8	--------	SPRING. CHROME (OEM 33084-41)
9	95-347	BRAKE PIVOT SHAFT BUSHING FOR 1977/1979 (OEM 34898-79)
10	96-336	BUSHING FOR 1954/1976 (OEM 33099-52A)
11	96-178	CRANK SHAFT FOR 1957/1976 (OEM 33094-57A)
	96-179	CRANK SHAFT 1977 & LATER (OEM 33094-77A)
12	96-269	NUT (OEM 7926)
13	96-332	LOCKWASHER (OEM 33362-52)
14	96-337	STARTER CRANK GEAR FOR 1957/ 1977 (OEM 33348-57)
15	95-701	O-RING FOR 1954 & LATER (OEM 11101)
16	96-341	THRUST PLATE FOR 1954 & LATER (OEM 33110-54)
17	22-49	BLACK RUBBER ONLY (OEM 33182-63A)
18	22-71	PEDAL COMPLETE WITH BLACK RUBBER (OEM 33175-16A)
19	96-227	COMPLETE PEDAL MOUNT HARDWARE SET
20	22-82	SPRING WASHER (OEM 33215-30)
21	47-58	CRANK ARM. CHROME (OEM 33057-72)

KICKSTARTER PARTS FOR 61, 74, & 80 C. I. 1936 & LATER

ALL PARTS SOLD EACH EXCEPT AS NOTED

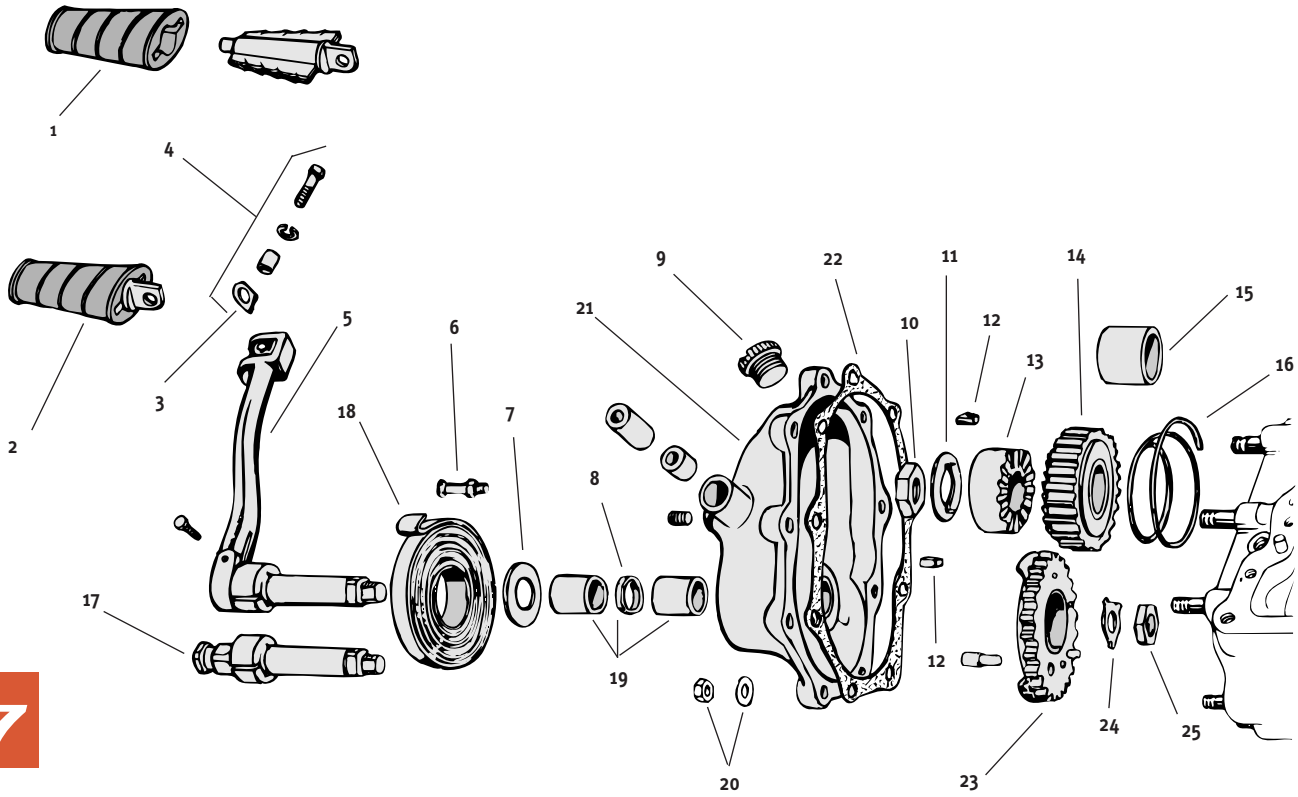

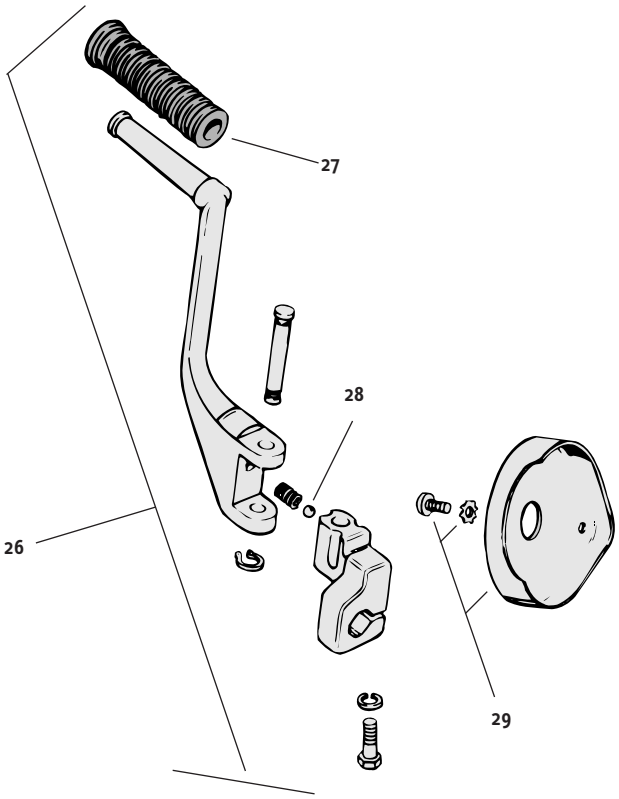

KICKSTARTER PARTS FOR 61, 74, & 80 C. I.

1936 & LATER

ALL PARTS SOLD EACH EXCEPT AT NOTED
ALSO AVAILABLE COMPLETE ASSORTMENT OF ALLEN & ACORN SCREWS I SECTION 14. ADDITIONAL KICK PEDALS FURTHER IN THIS SECTION

1	22-49	BLACK RUBBER ONLY (OEM 33182-63A)
2	22-71	PEDAL, COMPLETE WITH BLACK RUBBER (OEM 33175-16A)
3	22-82	SPRING WASHER (OEM 33215-30)
4	96-227	PEDAL BOLT KIT. 4 PIECES
5	47-58	CHROME CRANK ARM (OEM 33057-72)
6	96-174	STUD (OEM 33152-59)
7	96-176	WASHER (OEM 33080-36)
8	95-209	SEAL (OEM 33076-37)
9	41-267	CHROME DOMED FILLER PLUG, STOCK THREADS. REPLACES (OEM 701A)
	41-343	CHROME DOMED FILLER PLUG, O.S. THREADS. REPLACES (OEM 701A)
10	96-173	NUT (OEM 7977)
11	96-156	LOCKWASHER (OEM 33396-39)
12	96-175	KEY (OEM 33393-50)
13	96-119	CLUTCH GEAR FOR 1939 / EARLY 1975 (OEM 33381-39)
14	96-120	MAINSHAFT GEAR, 16 T, FOR 1950 & LATER (OEM 33430-50)
15	95-171	KICKER GEAR BUSHING FOR 1950 & LATER. FOR USE WITH DOMESTIC GEAR .907 O.D. (OEM 33438-50)
	95-414	KICKER GEAR BUSHING FOR USE WITH IMPORT GEAR .925 O.D.
16	96-123	SPRING (OEM 33391-36)
17	96-20	3/4" LONGER SHAFT FOR 1954 & LATER (OEM 33096-54A)
	96-585	3/4" LONGER STARTER SHAFT FOR MORE KICKER-TO-EXHAUST CLEARANCE. WILL ELIMINATE FOLD-OUT KICK ARM. JIMS
18	96-167	CHROME SPRING (OEM 33085-36)
19	95-170	BUSHINGS & SEAL (OEM 33288-37) SOLD AS KIT
20	—	
21	96-230	POLISHED END COVER. COMES WITH BUSHING (OEM 33277-36A)
	96-278	CHROME END COVER. COMES WITH BUSHING
22	78-462	GASKET (OEM 33295-36)
23	96-124	CRANK GEAR, 24 T (OEM 33350-36)
24	96-155	LOCKWASHER (OEM 33082-16)
25	96-172	NUT (OEM 7911)
26	47-93	KICK ARM ASSY. FOR SUPER GLIDE®. CHROME. COMPLETE WITH BRACKET & BLACK RUBBER
27	------	LATE KICK PEDAL REPLACEMENT COVER FOR XL 1963 & LATER AND FX 1971 & LATER. BLACK RUBBER (OEM 33189-63)
28	95-107	BALL BEARING (OEM 8860)
29	89-166	CHROME SPRING COVER WITH SCREW (OEM 33150-59)

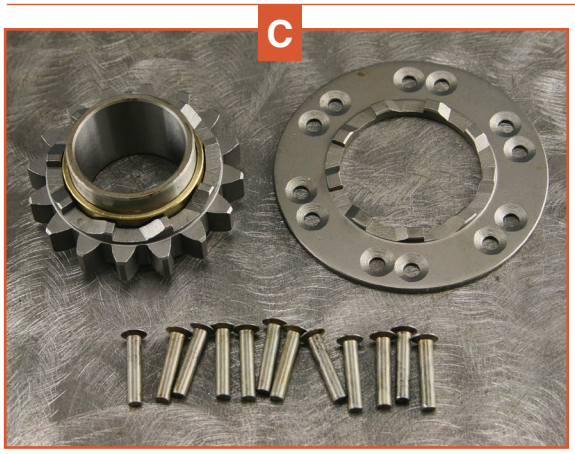

96-371

C. KICKSTART RATCHET & GEAR KIT

96-371 Fits all early XL 1957 thru 1970. OEM 8215, 33379-57, 33432-73, and 37754-74. **SOLD AS KIT**

96-372 Fits all late XL 1971 thru 1979. OEM 8216, 33379-71A, 33432-73, and 37753-73.

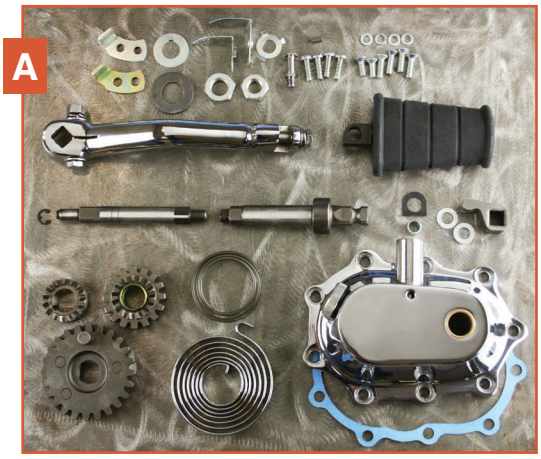

A. CHROME HEAVY DUTY KICK START KIT

Complete kit features an extra heavy duty, die cast, thick wall chrome kick cover for greater strength and reliability. Also included are a heavy duty offset kicker arm with pedal assembly, kicker shaft, gears, chrome return spring, heavy duty clutch release shaft and finger and all necessary locks and hardware.

NOTE: Cover mounting holes are counterbored — requires replacement of stock mounting studs with our part No. **41-782** transmission side cover screw kit.

96-706 Kit for 4 speed Big Twin 1936 & later.

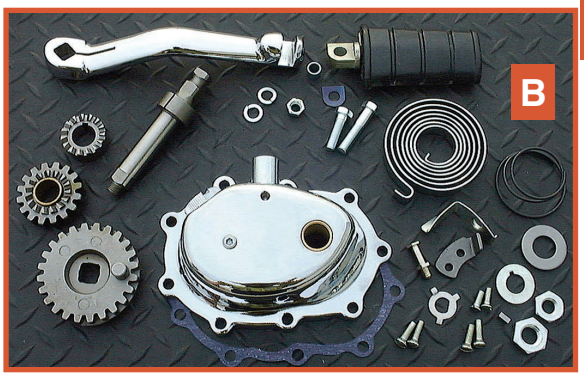

B. COMPLETE KICK START CONVERSION KIT FOR BIG TWIN 4 SPEED *1936 & LATER*

Kit contains everything needed to convert electric start to kick start. Both kits come with chrome plated kick arm and return spring.

96-232 Complete kit with polished cover. **SOLD AS KIT**

96-324 Complete kit with chrome cover.

D. TRANSMISSION OIL FILLER PLUGS

CHROME PLATED

The hex size and shallow crown are similar to the Knucklehead Knucklenut. Packaged complete with O-ring to provide an adequate seal with minimum torque. Fits Big Twins 1936 & later. Use oversize to restore pulled threads; self tapping.

41-343 Oversize. **SOLD EACH**

41-267 Standard size.



41-267 41-343

A

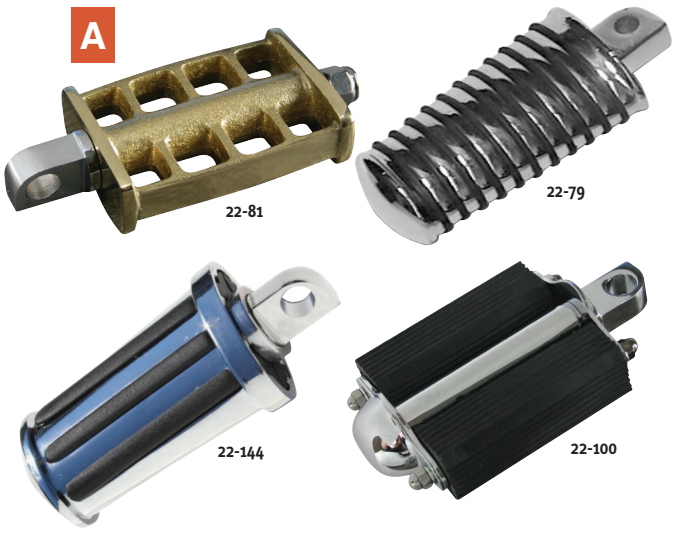

A. *CUSTOM KICKSTART PEDALS TO FIT ALL BIG TWIN, SPORTSTER®, AND 45”*

Original style rubber pedal. OEM 33175-16.

22-100 Chrome frame with black rubber blocks. SOLD EACH

Round O-ring style. Chrome.

22-3 Replacement O-rings. SOLD AS PKG OF 10

Flat O-ring style. Chrome.

22-79 Flat kick pedal SOLD EACH

22-5 Replacement O-rings. SOLD AS PKG OF 10

Original style. Hardened steel inner core.

22-81 Brass pedal. SOLD EACH

Rail style. Die cast and chrome plated. See Sec. 2 for Rail Style foot pegs and Sec. 4 for Rail Style grips.

22-144 Rail Style pedal. SOLD EACH

CHROME PLATED

B



B. *HEAVY DUTY KICK ARM for BIG TWIN & SPORTSTER®*

I-Beam type construction for added strength, added length for better leverage. Flush allen bolts for mounting.

47-148 Fits Big Twin & Sportster®. SOLD EACH

7

C. *CLUTCH ASSEMBLY FOR 2014 UP TOURING MODELS*

96-102 Complete clutch assembly 14 up Touring models SOLD AS ASSY

96-103 Clutch basket only 14 up Touring models. SOLD EA.

96-104 Clutch hub only 14 up Touring models SOLD EA.

C

96-102

96-103



96-104



NEW!

D. *CLUTCH HUB FOR SOFTAIL 2018 & LATER*

96-300 Clutch hub for Softail 2018 up, OEM37000239 SOLD EA.

D



NEW!

E. *CLUTCH HUB FOR 2017 UP TOURING MODELS*

These high quality clutch hubs come complete with 106 T starter ring gear & center bearing installed for easy installation.

96-301 Clutch hub 2017 up Touring models, OEM 37000254

E



CLUTCH PARTS FOR BIG TWIN LATE *1984 THRU 1989*

ALL PARTS SOLD EACH EXCEPT AS NOTED

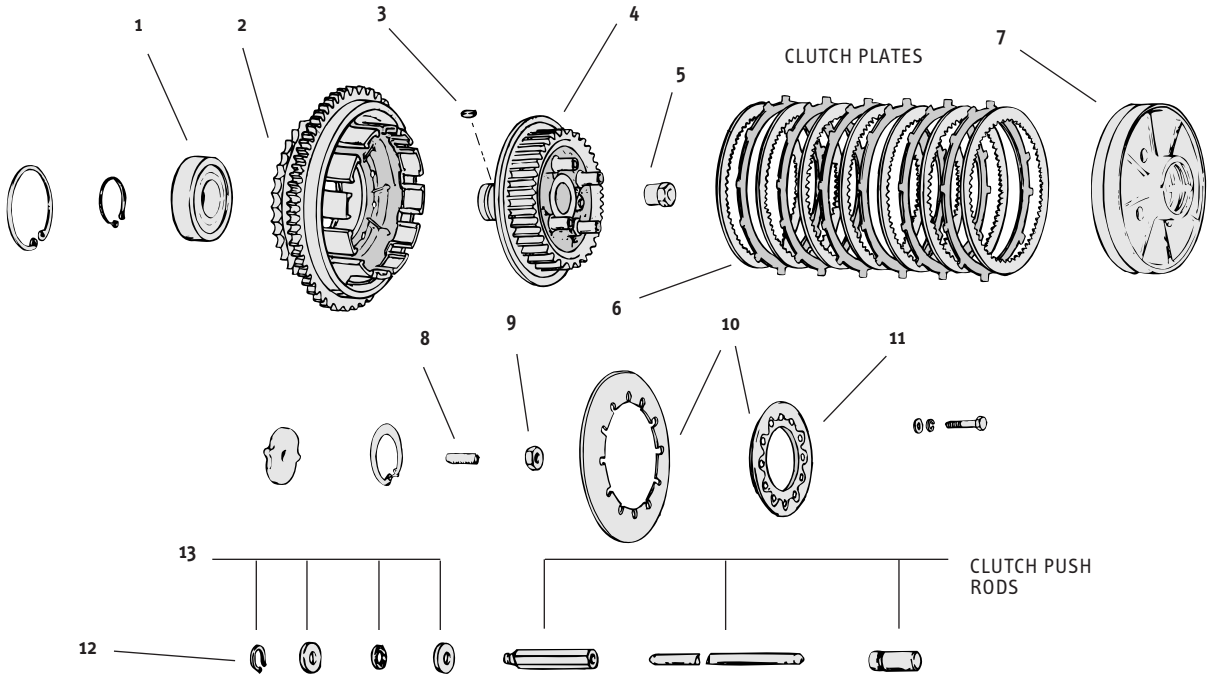

1	**95-316**	BEARING (OEM 9025A & 37906-84)
2	**96-813**	CLUTCH SHELL 1984 / 1989 (OEM 37707-84A)
3	**96-204**	CLUTCH HUB KEY 1985 / 1989 (OEM 37523-85)
4	**96-5**	CLUTCH HUB (OEM 37550-84A)
5	**96-686**	CLUTCH HUB NUT (OEM 37496-84)
6	—	STEEL DRIVE PLATE (OEM 37075-84)
7	—	PRESSURE PLATE (OEM 37901-84A)
8	**96-89**	ADJUSTING SCREW (OEM 37357-84)
9	**96-88**	JAM NUT (OEM 7848W)
10	—	HEAVY CLUTCH SPRING. BARNETT (OEM 37902-84A)
11	—	ADJUSTER PLATE (OEM 37902-86)
12	**96-452**	CLIP (OEM 11096)
13	**96-451**	BEARING KIT

7

A. *REDUCED EFFORT CLUTCH KIT*

Reduces the amount of effort needed to operate the clutch lever.

96-564 Fits Twin Cam® models 2005-earlier, and EVO 5-speed 1998-1999. SOLD AS KIT



B. *ALUMINUM PRESSURE PLATE FOR BIG TWIN*

Polished aluminum plate provides superior strength to prevent flexing or warping. Makes clutch much easier to adjust. Also helps prevent clutch slipping.

96-58 Aluminum pressure plate for Big Twin. SOLD EACH



C. *EASY PULL CLUTCH KITS FOR BIG TWIN & SPORTSTER®*

Reduces the amount of effort needed to operate the clutch lever. Complete clutch disengagement is still achieved. Installs easily.

96-560 Fits Big Twin 1987 & later except FXR and Sportster® 1986 thru 1990. SOLD AS KIT



CLUTCH PARTS FOR BIG TWIN 1941 THRU 1984

ALL PARTS SOLD EACH EXCEPT AS NOTED

1	**96-558**	CLUTCH SHELL & SPROCKET 1941/1984 KICKSTART (OEM 37703-41)
	96-559	CLUTCH SHELL & SPROCKET 1941/1984 ELECTRIC START (OEM 37702-70A)
2	**95-778**	MAINSHAFT NUT OIL SEAL (OEM 10214)
3	**96-61**	NUT 1941 & LATER (OEM 37496-65)
4	**96-190**	LOCK. STEEL (OEM 37503-41)
5	**96-84**	PLATE (OEM 37576-41)
6	—	ROLLER (OEM 6540A) SOLD AS PKG OF 100
7	**96-60**	RETAINER & ROLLERS (OEM 37567-41A)
8	**96-210**	LONG STUD (OEM 37583-41) USE THREE
9	**96-233**	SPRING (OEM 37574-44) USE THREE
10	**96-200**	KEY (OEM 37523-15)
11	**96-547**	RELEASE LEVER SHAFT 1941/1984 (OEM 37074-38A)
12	**96-211**	SHORT STUD (OEM 37585-41) USE SEVEN
13	**96-41**	HUB WITH THREE STUDS (OEM 37550-41B)
14	**95-253**	THROW OUT BEARING 1941/1971 (OEM 37310-39)
15	**96-565**	RELEASE FINGER 1941/1984 (OEM 37070-39B)
16	**96-653**	WASHER (OEM 6443HW/6702)
17	**96-309**	RETAINING RING (OEM 11000)
18	**96-199**	HUB STUD NUT (OEM 37591-47) USE THREE
19	**96-110**	PRESSURE PLATE (OEM 38010-41) **NOTE:** CAN BE USED WITH THREE, FIVE OR TEN LONG STUD CLUTCH HUBS.
20	**96-85**	ADJUSTING SCREW WITH BALL END (OEM 37357-41)
	96-87	ADJUSTING SCREW WITH PLAIN END
21	**96-86**	ADJUSTING SCREW NUT
22	**96-631**	CLUTCH RELEASING DISC (OEM 37871-41)
23	-------	DRIVE DISC WITHOUT BUFFERS. REPLACES OEM 37975-41.
	96-329	DRIVE DISC WITH BUFFERS (OEM 37975-41) **NOTE:** THREE USED 1967 & EARLIER, FOUR USED 1968 & LATER.
24	**96-13**	STANDARD CLUTCH LINER WITH STEEL BACKING PLATE AND RIVETS FOR 1941/1983

A

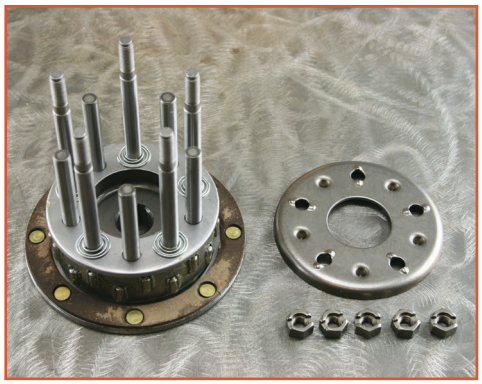

96-308

A. CLUTCH HUBS FOR BIG TWIN 1941 THRU 1984

Get even, ideal clutch action by using this hub with adjustable studs that allows you to fine tune the adjustments with ultimate precision. Kit includes nuts, friction disc with rivets, bearing retainer with bearings, bearing retainer plate & springs, and pressure plate.

96-308 Complete clutch hub with five adjusting studs. SOLD AS KIT
96-333 Clutch hub with friction disc — five stud.
96-9 Complete clutch hub with three adjusting studs.
96-41 Clutch hub with friction disc — three stud. Replaces OEM 37550-41B.
96-13 Standard clutch liner with rivets.

B



96-409

B. CLUTCH HUB 5 AND 52

This is the newest set-up for complete clutch hub replacement. This kit comes with five adjustable studs that allow you to fine tune the adjustments. Also included are 52 long rollers that eliminate the old style caged rollers, adjusting nuts, friction disc bearing retainer plate & clips and 5 finger pressure plate. One extra roller is included.

96-409 Hub kit. SOLD AS KIT
96-420 Imported bearing kit.

CLUTCH PARTS FOR BIG TWIN 1941 THRU 1984

ALL PARTS SOLD EACH EXCEPT AS NOTED

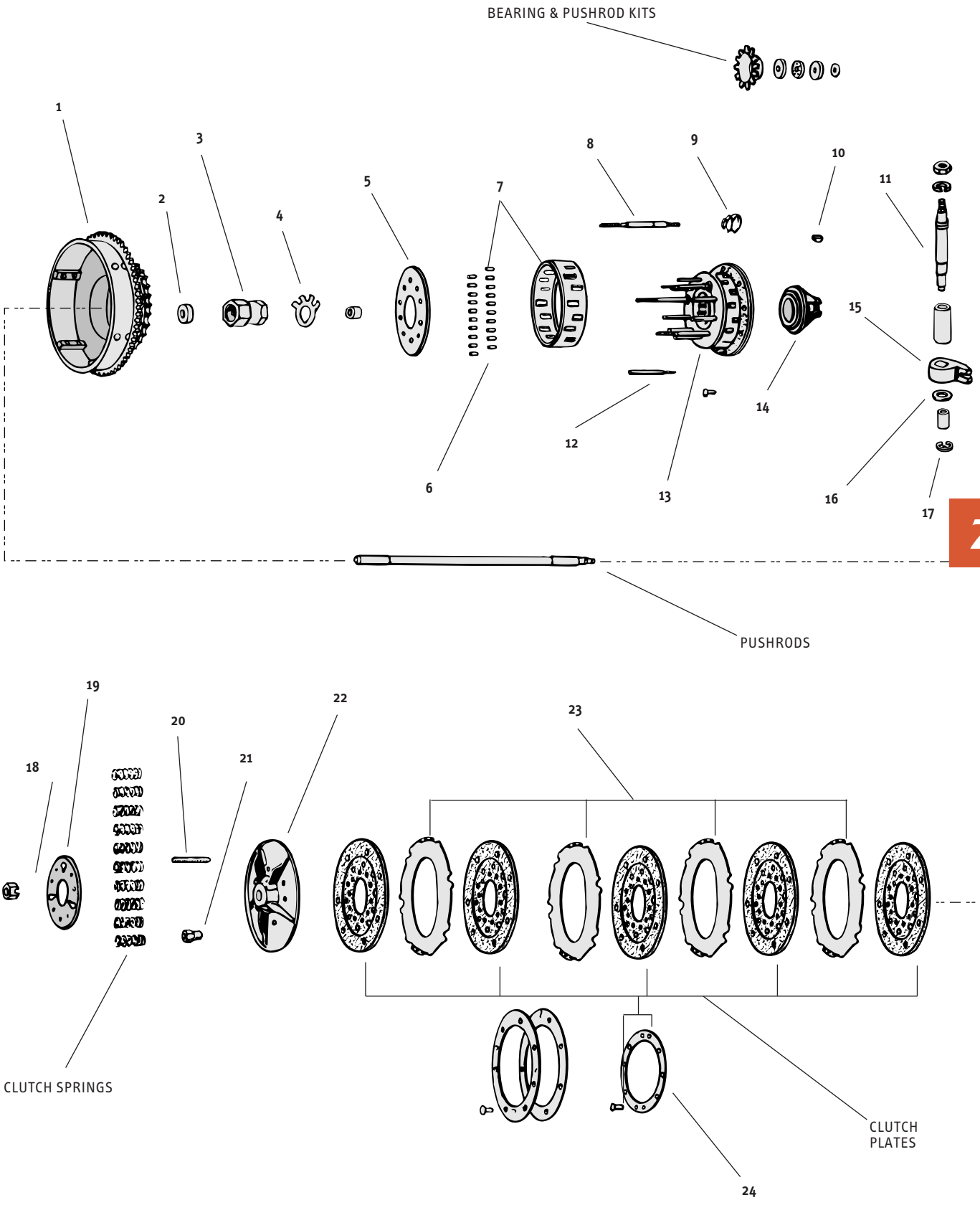

CLUTCH PARTS FOR BIG TWIN *LATE 1990 THRU 1997*

ALL PARTS SOLD EACH EXCEPT AS NOTED

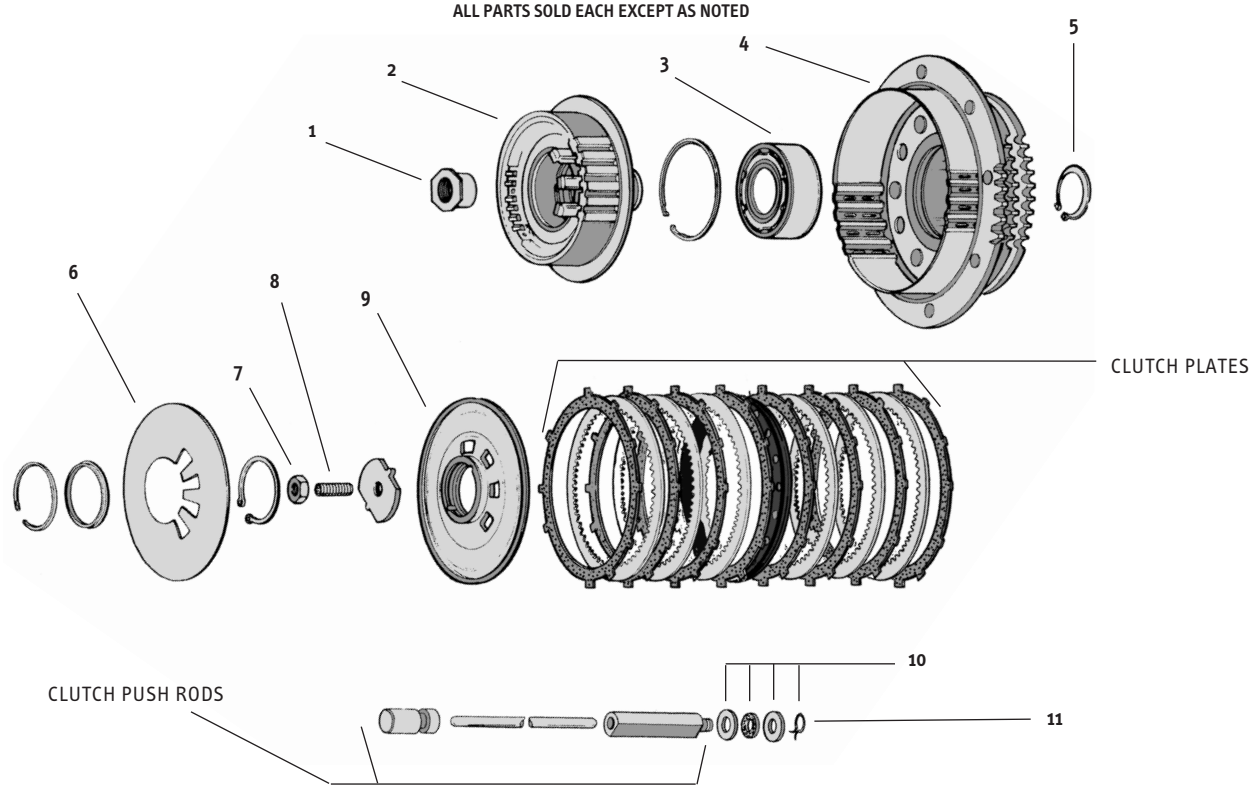

1	**96-682**	CLUTCH HUB NUT (OEM 37496-90)
2	**96-803**	CLUTCH HUB (OEM 37550-90A)
3	**95-801**	BEARING FOR 1990/2001 (OEM 37906-90)
4	**96-814**	CLUTCH SHELL FOR 1990/1993 (OEM 37707-90)
	96-815	CLUTCH SHELL FOR 1994/1997 (OEM 37707-94)
5	**96-4**	RETAINING RING FOR 1990/2001 (OEM 37904-90)
6	-------	HEAVY DUTY CLUTCH SPRING. BARNETT
7	**96-88**	JAM NUT (OEM 7848W)
8	**96-89**	ADJUSTING SCREW (OEM 37357-84)
9	**96-804**	PRESSURE PLATE (OEM 37912-91)
10	**96-451**	BEARING KIT
11	**96-452**	CLIP (OEM 11096)

CLUTCH PARTS FOR SPORTSTER® & KH 1954 THRU 1970

ALL PARTS SOLD EACH EXCEPT AS NOTED

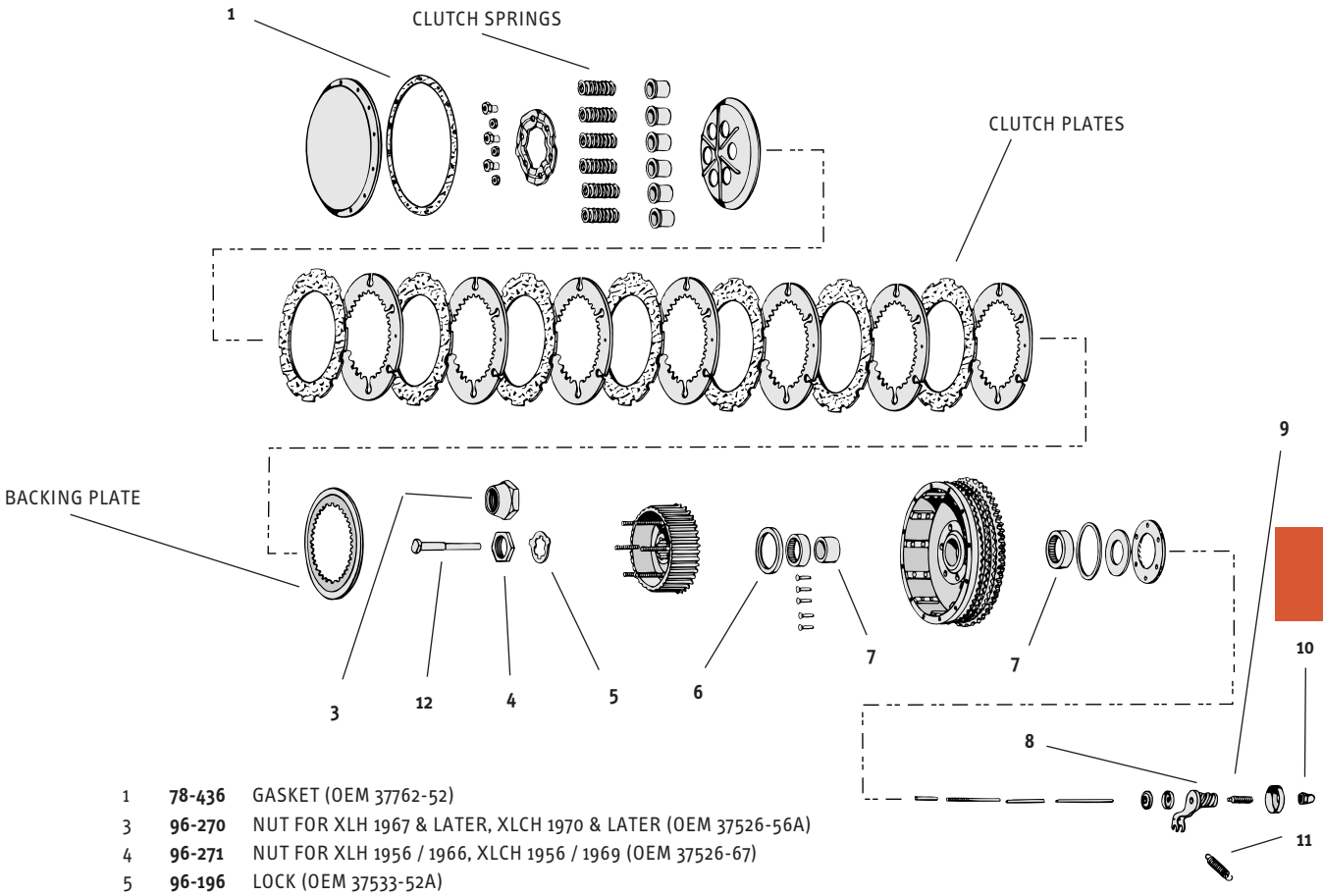

1	**78-436**	GASKET (OEM 37762-52)
3	**96-270**	NUT FOR XLH 1967 & LATER, XLCH 1970 & LATER (OEM 37526-56A)
4	**96-271**	NUT FOR XLH 1956 / 1966, XLCH 1956 / 1969 (OEM 37526-67)
5	**96-196**	LOCK (OEM 37533-52A)
6	**95-325**	OIL SEAL FOR XLH 1967 / 1979, XLCH 1970 (OEM 37741-67)
7	**95-609**	CLUTCH SPROCKET NEEDLE BEARING (OEM 37722-52)
8	**96-115**	RELEASE WORM (OEM 37201-54)
9	**96-202**	SCREW (OEM 38130-54)
10	—	LOCK NUT (OEM 38135-50)
11	**96-235**	SPRING (OEM 37222-52)
12	**96-461**	CLUTCH PUSHROD FOR 1956 / 1966 ALL MODELS, AND 1967 / 1969 XLCH ONLY. **U.S.A. MADE** (OEM 37279-56, 37281-47, 37282-53 & 37276-53) SOLD AS KIT
	96-462	CLUTCH PUSHROD **U.S.A. MADE** (OEM 37280-67, 37281-47, 37282-53 & 37276-53) SOLD AS KIT

CLUTCH PARTS FOR SPORTSTER® ALL MODELS 1971 THRU EARLY 1984

ALL PARTS SOLD EACH EXCEPT AS NOTED

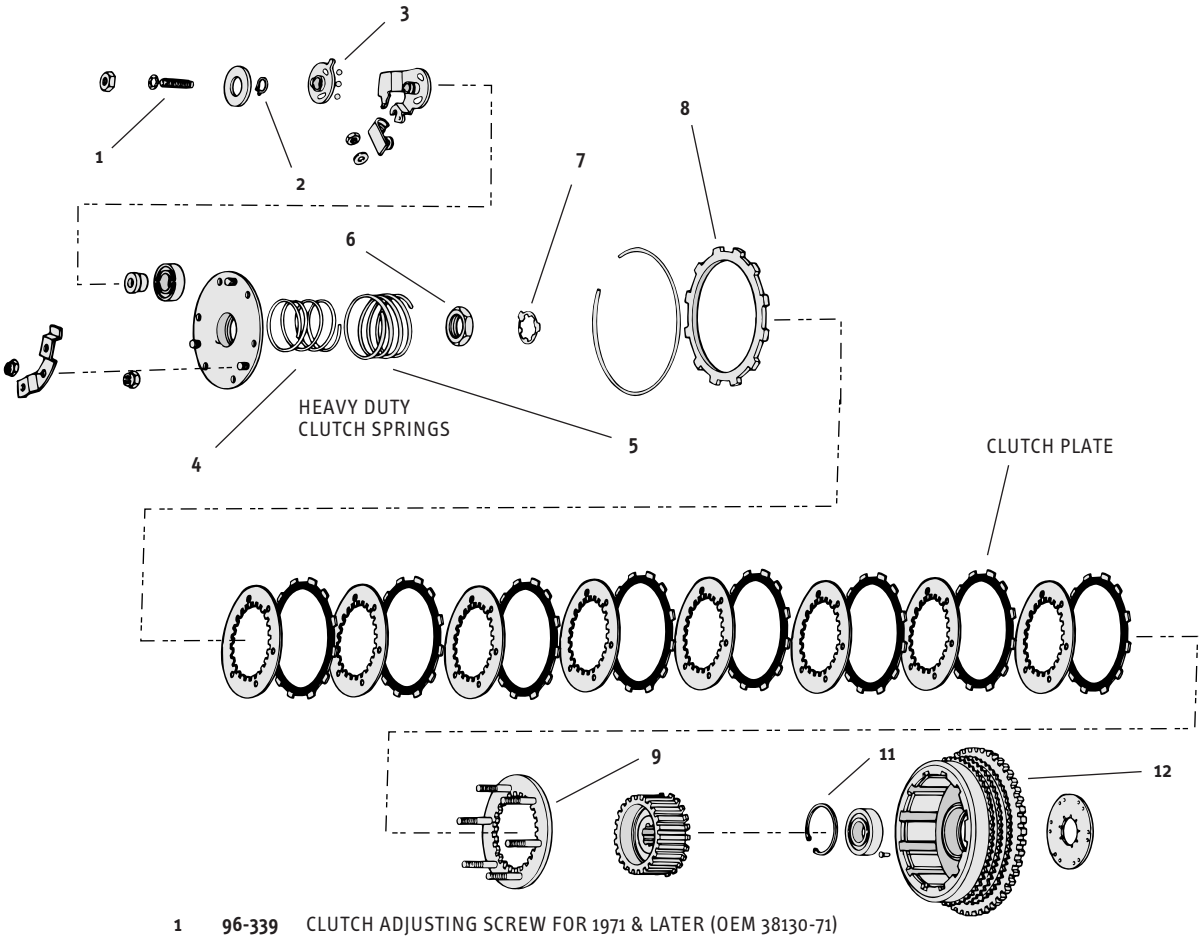

1	**96-339**	CLUTCH ADJUSTING SCREW FOR 1971 & LATER (OEM 38130-71)
2	**96-481**	SNAP RING FOR 1971 / EARLY 1984 (OEM 11005)
3	**95-107**	BALL (OEM 8860) USE THREE
4	**96-537**	INNER SPRING (OEM 38080-71)
5	**96-536**	OUTER SPRING (OEM 38079-72)
	96-57	PRECISION MACHINING HEAVY DUTY SINGLE SPRING
6	**96-271**	NUT (OEM 37526-67)
7	**96-196**	LOCK (OEM 37533-52A)
8	--------	OUTER DRIVE PLATE (OEM 37987-71)
9	**96-352**	BACKING PLATE LATE FOR 1974 / 1978 (OEM 38005-74) **NOTE:** 1971 / EARLY 1974 NEEDS TO USE SPACERS H-D® PART NO.'S 5995, 5996 & 5997
11	**96-480**	SNAP RING FOR 1971 / EARLY 1984 (OEM 11052)
12	**96-587**	STARTER RING GEAR ONLY,FOR 1971 / 1980 (OEM 37762-67)

CLUTCH PARTS FOR 45 CUBIC INCH SOLO & SERVI-CAR *ALL MODELS & ALL YEARS*

ALL PARTS SOLD EACH EXCEPT AS NOTED

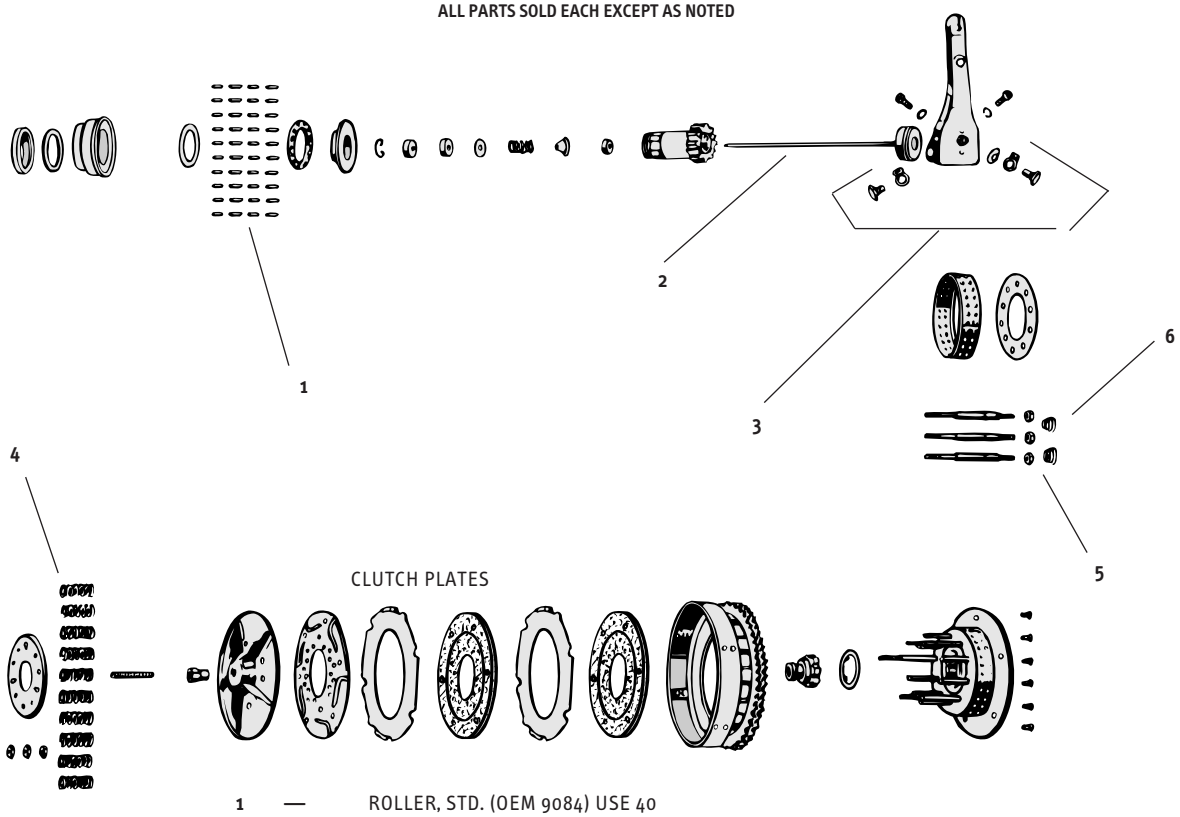

1	—	ROLLER, STD. (OEM 9084) USE 40
2	**96-62**	PUSHROD (OEM 37287-41)
3	**96-346**	CLUTCH ARM REBUILD KIT FOR 45". INCLUDES PRECISION MACHINED, HEAT TREATED BUSHINGS & PIVOT BOLTS TO REBUILD CLUTCH ARM & SPROCKET COVER. COLONY. SOLD AS KIT
4	—	CLUTCH SPRINGS; SET OF 10 (OEM 38077-41) SOLD AS SET
5	**96-199**	NUT (OEM 37581-47) USE 3
6	**96-233**	SPRING (OEM 37574-44) USE 3



A. *ULTIMA PERFORMANCE CLUTCH KITS*

Ultima now offers performance clutch kits for high output motors to direct power to the pavement. These clutch kits are made using high quality, high performance components. Clutch kit includes quality friction plates that utilize maximum surface area, high load springs, a precision machined anodized billet aluminum pressure plate designed to deliver high power at minimal weight, and an indestructible direct fit clutch hub. Kits come with three different spring rates to accommodate all styles of riding. SOLD AS KIT

96-730 High Performance Clutch kit. Fits 1998-06 Big Twin (except '06 Dyna's®).
58-769 Replacement Clutch kit for above clutch (**96-730**).

96-731 High Performance Clutch kit. Fits 1990-97 Big Twin.
58-819 Replacement Clutch kit for above clutch (**96-731**).



B. *HEAVY DUTY CLUTCH SPRING PLATE*

These heavy duty s pring plates increase pressure by approximately 20% which is better suited for high compression engines and better clutch operation. Replaces OEM#37871-90.

96-247 Clutch spring plate, heavy duty. SOLD EACH



C. *ADJUSTABLE CLUTCH HUB RETAINERS*

The Retainer cures the "grabby clutch" found in many H-D® 74" & 80" V-Twins by keeping the clutch drum in place. Installation is easy by following all the steps of a regular clutch service. It's not going to fix every clutch problem but if installed correctly, in a well maintained V-Twin, the H-D® clutch will work better than it ever has. Fits all 74" & 80" V-Twins 1936 thru 1984, belt or chain drive primary.

96-405 Clutch hub retainer for 3 or 5 stud hub. SOLD AS KIT

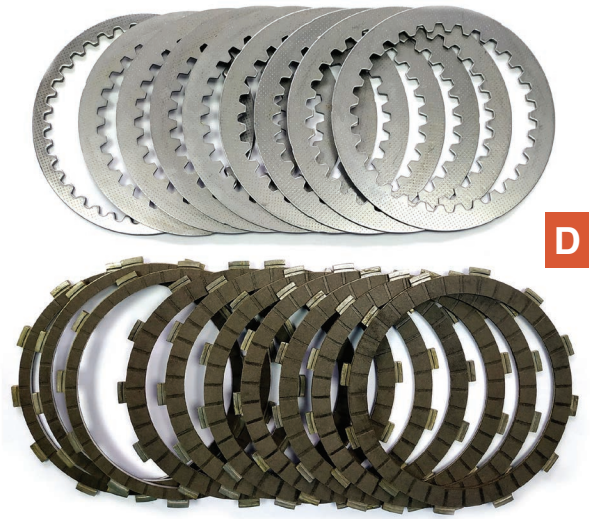

96-109

D. *MILWAUKEE EIGHT CLUTCH KITS*

The new M8 clutch kits are precision made with high quality components. Standard and heavy duty kits available.

Fits: 2017 later Touring & 18 later Softail models. Sold as a kit.

96-109 Standard M8 clutch plate kit. OEM37000258
Kit includes: 9x Contact plates, 10x Fiber friction plates

96-111 Heavy Duty M8 clutch plate & spring kit. OEM 37000287
Kit includes: 10x Contact plates, 10x Fiber friction plates and 3x heavier duty clutch springs.

NEW!



96-111

GTR CLUTCH PLATES

NEW!



The new GTR clutch plate sets have smooth engagement and stock fitment which increase the service life of the clutch. All kits have pre-measured stack heights with tempered steel friction plates proven to race standards at a great price point. Sold in kits.

Part#	Description	Model	Year	Friction Pieces	Steel Pieces
96-143	GTR CLUTCH PLATE SET DYNA 98-17	DYNA FX	98-17	9	8
96-144	GTR CLUTCH PLATE SET DYNA 91-97	DYNA FX	91-97	8	7
96-145	GTR CLUTCH PLATE SET M8 SCREAMING EAGLE	SCREAMN' EAGLE	18	10	10
96-146	GTR CLUTCH PLATE SET SOFTAIL M8	SOFTAIL FL	18	10	9
96-147	GTR CLUTCH PLATE SET SOFTAIL 98-17	SOFTAIL FL & FX	98-17	9	8
96-148	GTR CLUTCH PLATE SET SOFTAIL 90-97	SOFTAIL FL & FX	90-97	8	7
96-149	GTR CLUTCH PLATE SET SOFTAIL 84-89	SOFTAIL FX	84-89	6	7
96-150	GTR CLUTCH PLATE SET SOFTAIL 81-83	SOFTAIL FX	81-83	6	4
96-151	GTR CLUTCH PLATE SET XL 91-18	SPORTSTER XL	91-18	8	7
96-171	GTR CLUTCH PLATE SET XL 84-90	SPORTSTER XL	84-90	7	6
96-177	GTR CLUTCH PLATE SET XL 71-83	SPORTSTER XL	71-83	9	8
96-180	GTR CLUTCH PLATE SET XR 08-13	SPORTSTER XR	08-13	8	6
96-181	GTR CLTUCH PLATE SET FLT 17-18	TOURING FL	17-18	9	7
96-182	GTR CLUTCH PLATE SET FLT 98-16	TOURING FL	98-16	9	8
96-183	GTR CLUTCH PLATE SET FLT 90-97	TOURING FL	90-97	8	7
96-184	GTR CLUTCH PLATE SET FLT 84-89	TOURING FL	84-89	6	7
96-186	GTR CLUTCH PLATE SET FLT 81-83	TOURING FL	81-83	6	4
96-187	GTR CLUTCH PLATE SET VRSC 08-17	VRSC	08-17	9	8
96-188	GTR CLUTCH PLATE SET VRSC 02-07	VRSC	02-07	9	8
96-189	GTR CLUTCH PLATE SET STREET 15-17	STREET XG	15-17	9	8
96-191	GTR CLUTCH PLATE SET POLICE 17	POLICE FL	17	10	9
96-197	GTR CLUTCH PLATE SET POLICE 11-16	POLICE FL	11-16	9	8
96-198	GTR CLUTCH PLATE SET TRIKE 17-18	TRIKE FL	17-18	10	9
96-205	GTR CLTUCH PLATE SET TRIKE 14-16	TRIKE FL	14-16	9	7
96-205	GTR CLUTCH PLATE SET TRIKE 09-13	TRIKE FL	09-13	9	8

CLUTCH COMPONENTS FOR BDL CLUTCHES

BRAND	DESCRIPTION	OEM NO.	PART NO.	SOLD AS
	FOR BDL CHAIN DRIVES & EVO COMPETITOR CLUTCH			
ALTO	Friction & steels kit for standard pressure plate	CC-100	96-974	KIT
ALTO	Friction & steels kit for ball pressure plate	CC-120	96-975	KIT
	QUIET CLUTCH FOR EVO AND EVB DRIVES			
BDL	Steel backing plate.	EDP-200	58-394	EACH
ALTO	Contains 6 friction & 6 steel plates.	ERCP-100	96-972	KIT
	STANDARD CLUTCH FOR EVO AND EVB DRIVES			
BDL	1 Sided Kevlar® friction plate.	ECP-100	58-314	EACH
BDL	Square dog steel plate.	EDP-100	58-312	EACH
BDL	Steel backing plate.	EDP-200	58-394	EACH
ALTO	Contains 7 friction & 8 steel plates.		96-973	KIT
	SS-2 BELT DRIVES			
BDL	Replacement steel balls (20).	SS-SBB	58-843	KIT
BDL	Replacement carbide balls (20).	SS-CBB	58-844	KIT

CLUTCH COMPONENTS FOR SPORTSTER® 1957 THRU 1970

BRAND	DESCRIPTION	OEM NO.	PART NO.	SOLD AS
	CLUTCH PACKS			
ALTO	Contains 7 Red Eagle friction plates.	37985-52A	96-811	KIT
	DRIVE PLATES			
ALTO	.047 Steel drive plate (standard).	37992-52	96-812	EACH

CLUTCH COMPONENTS FOR SPORTSTER® 1971 THRU 1983

	CLUTCH PACKS			
ALTO	Contains 8 Red Red Eagle friction plates	37985-71	96-374	KIT
	DRIVE PLATES			
ALTO	Steel drive plate.	37992-72	96-365	EACH
	CLUTCH SPRINGS			
Precision Machining	Heavy duty single spring.	38080-71/ 38079-72	96-57	EACH

CLUTCH COMPONENTS FOR SPORTSTER® 1984 THRU 1990

	CLUTCH PACKS			
ALTO	Contains 7 Red Eagle friction plates.	36788-85	96-433	KIT
	DRIVE PLATES			
ALTO	Steel drive plate.	36787-85	96-467	EACH

CLUTCH COMPONENTS FOR BIG TWIN 1941 THRU 1983

BRAND	DESCRIPTION	OEM NO.	PART NO.	SOLD AS
	CLUTCH PACKS			
ALTO	Contains 4 Red Eagle friction plates, 1941-1967.	37850-41	96-549	KIT
ALTO	Contains 5 Red Eagle friction plates, 1968-1983.	37930-68A	96-373	KIT
ALTO	Carbonite Power Pack, 6 friction & 5 steel plates.		96-916	KIT
ALTO	Contains 5 Kevlar® friction plates.	37930-68A	96-376	KIT
	DRIVE PLATES			
ALTO	Steel drive plate without buffers.	37975-41	96-557	EACH
ALTO	Steel drive plate with buffers.	37975-81	96-329	EACH
	HUB LINER			
ALTO	Hub liner with rivets.	37549-41	96-13	KIT

CLUTCH COMPONENTS FOR BIG TWIN 1984 THRU 1989

BRAND	DESCRIPTION	OEM NO.	PART NO.	SOLD AS
	CLUTCH PACKS			
ALTO	Contains 6 Red Eagle friction plates.	37930-86	96-534	KIT
ALTO	Carbonite Power Pack, 7 friction & 8 steel plates.		96-917	KIT
	DRIVE PLATES			
ALTO	Steel drive plate.	37975-84A	96-468	EACH
	CLUTCH SPRING			
ALTO	Replacement diaphragm clutch spring.		96-529	EACH

CLUTCH COMPONENTS FOR BIG TWIN 1990 THRU 1997 & SPORTSTER® 1991 & LATER

BRAND	DESCRIPTION	OEM NO.	PART NO.	SOLD AS
	CLUTCH PACKS			
ALTO	Contains 8 Red Eagle friction plates.	37910-90	96-561	KIT
ALTO	Carbonite Power Pack, 10 friction 9 steel plates.		96-918	KIT
	DRIVE PLATES			
ALTO	Steel drive plate.	37913-90	96-562	EACH
ALTO	Spring separator plate.	37975-90/ 37977-90	96-618	EACH

CLUTCH COMPONENTS FOR BIG TWIN 1998 & LATER

BRAND	DESCRIPTION	OEM NO.	PART NO.	SOLD AS
	CLUTCH PACKS			
ALTO	Contains 9 Red Eagle friction plates.	37911-98	96-925	KIT
ALTO	Carbonite Power Pack, 10 friction 9 steel plates.		96-919	KIT
	DRIVE PLATES			
ALTO	Steel drive plate.	37913-98	96-912	EACH
	CLUTCH SPRING			
ALTO	Standard clutch spring.		96-913	EACH
ALTO	Heavy duty diaphragm spring.		96-911	EACH

CLUTCH COMPONENTS FOR RIVERA PRIMO CLUTCHES

BRAND	DESCRIPTION	OEM NO.	PART NO.	SOLD AS
	FOR RIVERA PRIMO PRO CLUTCHES			
ALTO	K2 frictions and steels, 1991-UP, XL	PC-1300	96-980	KIT
ALTO	K2 frictions and steels, 1990-1997, BT	PC-1200CA	96-981	KIT

A. *REPLACEMENT BEARING & PUSHROD KIT*

Replacement throw out bearing & pushrod kit. OEM 37305-70.

96-256 Updates the pushrod on 1936-1975 Big Twins, & replaces the pushrod on 1975-1984 Big Twins. SOLD AS KIT

Bearing kit only. Includes two (2) washers (OEM 37313-80), one (1) bearing (OEM 37312-75) and one (1) ring clip (OEM 11096).

96-451 Bearing kit for late 1975 & later. SOLD AS KIT

96-452 Clip only. OEM 11096. U.S.A. MADE. SOLD EACH

96-460 Oil slinger for late 1975 thru early 1984. OEM 37228-75. SOLD EACH

B. *"HIGH STRENGTH" PUSH RODS FOR BIG TWIN*

These **U.S.A. MADE** pushrods are manufactured out of heat-treated steel and flame-hardened at both ends.

96-93 Fits all Big Twin 1936 thru 1964. 13-1/4" Long. OEM 37285-38. SOLD EACH

96-94 Fits all Big Twin 1965 thru 1969. 13-1/2" Long. OEM 37285-65.

96-95 Fits all Big Twin 1970 thru early 1975 14" Long. OEM 37285-70.

96-96 Fits all Big Twin late 1975 thru early 1984. 14-1/8" Long. OEM 37285-75.

C. *RELEASE FINGERS*

96-565 For 1941 thru 1984. OEM 37070-39B. SOLD EACH

D. *THROW-OUT BEARING CONVERSION KIT FOR BIG TWIN*

Heavy-duty complete kit includes clutch pushrod, gasket, throw-out bearing and gear to convert late bearings to old-style heavy-duty throw out bearings.

96-277 For 74" & 80" 1970 & later (except FLT and FXR). SOLD AS KIT

E. *HIGH STRENGTH PUSHRODS FOR BIG TWIN*

U.S.A. MADE three-piece clutch pushrods for 4 speed (diaphrag clutch) transmissions late 1984 thru 1986, and 5 speed transmissions 1980 & later. Heat treated where necessary. Each rod sold separately.

YEAR	PART NO.	OEM NO.	
All late 1984 thru 1986 4 spd.	**96-438**	37089-84	Right
	96-443	37285-84	Center
	96-440	37090-84	Left
All 1980 thru early 1984 5 spd. 10.125" in length	**96-436**	37089-79	Right
	96-435	37088-79	Center
	96-437	37090-79	Left
All late 1984 5 spd. 10.375" in length	**96-438**	37089-84	Right
	96-439	37088-84	Center
	96-440	37090-84	Left
All 1985 & 1986 5 spd. 11.0" in length	**96-438**	37089-84	Right
	96-441	37088-85	Center
	96-440	37090-84	Left
All 1987 thru 1989 5 spd. 11.375" in length	**96-438**	37089-84	Right
	96-442	37088-87	Center
	96-440	37090-84	Left
All 1990 5 spd. 10.8125" in length	**96-438**	37089-84	Right
	96-538	37088-90	Center
	96-440	37090-84	Left
All 1991 & later 5 spd. 10.8125" in length	**96-654**	37069-90	Right
	96-538	37088-90	Center
	96-655	37090-84A	Left
All 1985 & later 5 & 6 spd. 11.875" in length	**96-469**	N/A	Center
	96-452	11096	Clip only.

ALSO AVAILABLE: Bearing retaining clip for all Big Twin late 1975 thru 1996.

A

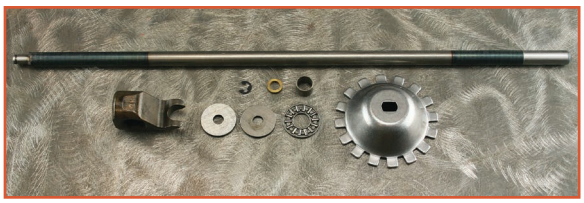

B



C



D

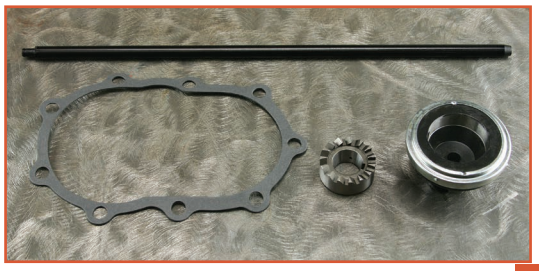

7

E



LEFT





RIGHT



CENTER

F



F. *CLUTCH PUSHRODS FOR SPORTSTER®*

Fits 1956 thru 1966, all models, and 1967 thru 1969 XLCH only.

96-461 Replaces OEM 37279-56, 37281-47, 37282-53 and 37276-53. SOLD AS KIT

Fits 1967 thru 1970 XLH, and 1970 XLCH.

96-462 Replaces OEM 37280-67, 37281-47 37282-53 & 37276-53. SOLD AS KIT

DRIVE SYSTEM FOR BIG TWIN 4 SPEED ALL MODELS, ALL YEARS

ALL PARTS SOLD EACH

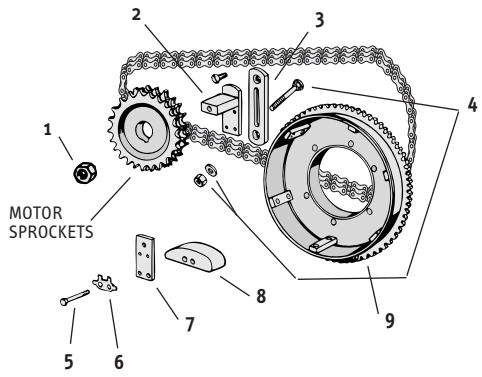

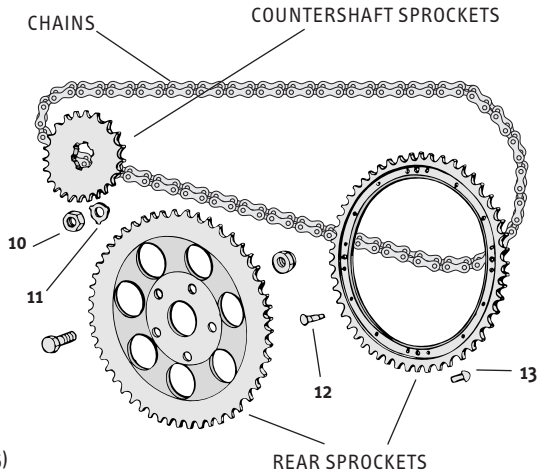

SEE COMPENSATING SPROCKET NUTS

1	94-138	MOTOR SPROCKET NUT FOR 1955 & LATER (OEM 24003-55)
	94-139	MOTOR SPROCKET NUT FOR 1930 / 1954 (OEM 24003-30)
2	5-138	CHAIN TENSIONER SHOE (OEM 39990-65)
3	5-137	ANCHOR PLATE (OEM 39998-65)
4	5-139	BOLT, NUT & WASHER (OEM 39992-65C) SOLD AS SET
5	5-201	BOLT (OEM 3862B) TWO REQUIRED
6	5-202	LOCK (OEM 39996-65)
7	5-203	PLATE (OEM 39993-65)
8	5-74	PAD ASSY. FOR 1965 & LATER (OEM 39976-65A)
9	96-320	STARTER RING GEAR FOR ALL 1965 / 1984 ELECTRIC START (OEM 33163-65B)
10	94-140	NUT (OEM 32511-36)
11	94-134	LOCK (OEM 35216-36)
12	94-142	DOWEL PIN FOR 1941 / 1966 (OEM 41485-30)
13	94-132	RIVET FOR 1967 / 1972 (OEM 8532)
	94-135	RIVET FOR 1948 / 1959 (OEM 8485)
	94-136	RIVET FOR 1960/ 1966 (OEM 8524)

7

DRIVE SYSTEM FOR SPORTSTER® EARLY MODELS

ALL PARTS SOLD EACH

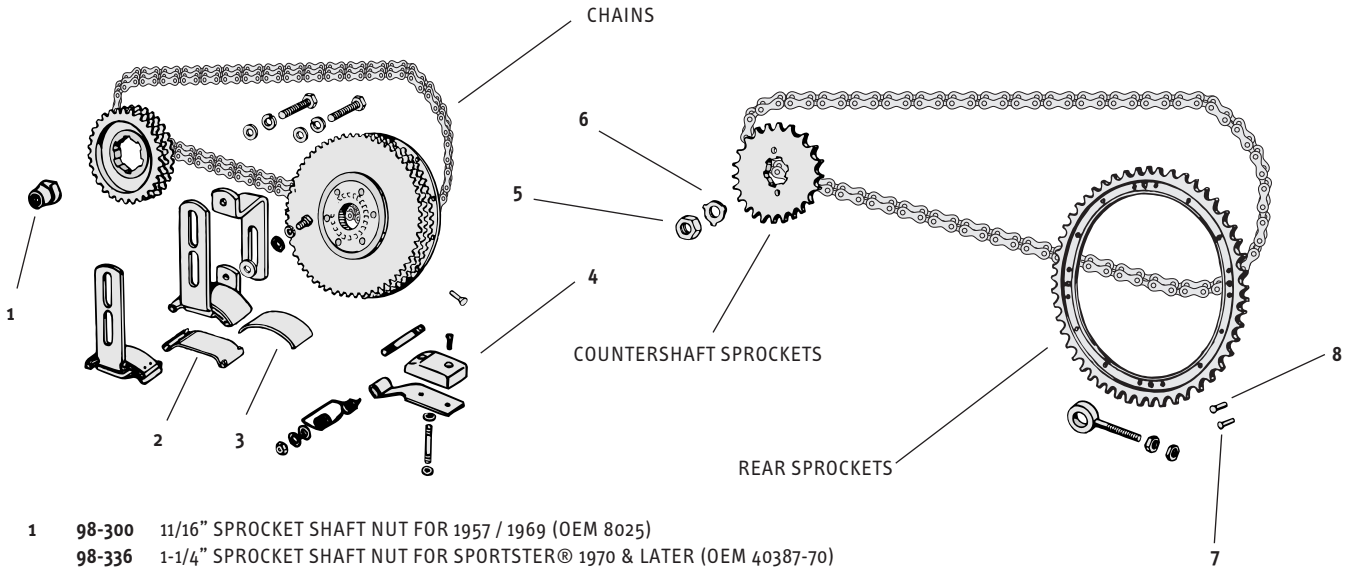

1	98-300	11/16" SPROCKET SHAFT NUT FOR 1957 / 1969 (OEM 8025)
	98-336	1-1/4" SPROCKET SHAFT NUT FOR SPORTSTER® 1970 & LATER (OEM 40387-70)
2	5-82	RETAINER LATE FOR 1958 / 1976 (OEM 39979-58A)
3	5-75	PAD (OEM 39978-58)
4	5-109	NYLON CHAIN TENSIONER FOR 1979 & LATER (OEM 39966-80)
5	96-482	MAINSHAFT NUT FOR 1954 / 1970 (OEM 35047-53)
	96-338	MAINSHAFT NUT FOR 1971 & LATER (OEM 35047-71A)
6	—	SPROCKET LOCK (OEM 35050-52)
7	94-142	DOWEL PIN (OEM 41485-30) USE 4
8	94-135	RIVET FOR 1948 / 1959 (OEM 8485) USE 16

SPROCKET NUT



PLAIN METAL

Sprocket nut with seal. Fits Big Twin 1936 & later with 4 speed transmission.

94-174 Imported. SOLD EACH

A. *COMPENSATING SPROCKET KITS*

These kits include compensating sprocket nut, retainer and spring assembly, sliding cam for compensating sprocket, compensating sprocket and crankshaft extension. SOLD AS KIT

94-332 For 1984 thru 1990 Softail® (shown).
94-335 For 1991 thru 1993 (shown).
94-337 For 1994 thru 2006.
94-339 For 2006-later FXST & FLST.

B. *SLIDING CAMS*

94-331 For 1970 thru 1983. Replaces OEM 40299-70. SOLD EACH
94-334 For 1984 & later (shown). Replaces OEM 40299-83A.
94-181 For 2007 & later. Replaces OEM 40333-06.

C. *COMPENSATING SPROCKET COVER ASSEMBLY WITH SPRING*

Fits all model Big Twin. Sold each.

94-327 For 1970 thru 1982. OEM 40384-70.

D. *SPROCKET SHAFT EXTENSIONS*

For 1970 thru 1990 Softail®. Sold each.

94-333 Stock length. Replaces OEM 40375-70.

For Softail® 1991 & later, Dyna® 1991 & later, FLT 1985 & later, and FXR 1985 thru 1994. Sold each.

94-336 Stock length (shown). Replaces OEM 40266-85.
94-383 1/2" o.s. Length sprocket shaft.
94-382 1" o.s. Length sprocket shaft.

E. *SPROCKET NUTS*

For 1970 thru 1990. Sold each.

94-263 Stock length. Replaces OEM 40392-70.
94-385 1/2" o.s. Length shaft nut.
94-384 1" o.s. Length shaft nut.

For 1991 & later. Sold each.

94-330 Stock length. Replaces OEM 40392-91.
94-387 1/2" o.s. Length shaft nut.
94-386 1" o.s. Length shaft nut.

F. *COMPENSATING SPROCKETS FOR BIG TWIN*

For Big Twin 1970 thru 1982. Sold each.

94-218 23 Tooth. OEM 40282-70.
94-219 24 Tooth. OEM 40275-70.

For FLT 1984, FXR 1982 thru 1984 and Softail® 1984 thru 1990.

94-270 24 Tooth. OEM 40275-83A.

For FLT 1985 thru 1993, FXR 1985 thru 1993, Softail® 1991 thru 1993 and Dyna Glide® 1991 thru 1993.

94-271 24 Tooth. OEM 40269-85A.

For Softail® 1994 thru 2006.

94-348 25 Tooth. OEM 40308-94.

For Softail® 2007-later.

94-180 34 Tooth. OEM 40320-06.

A

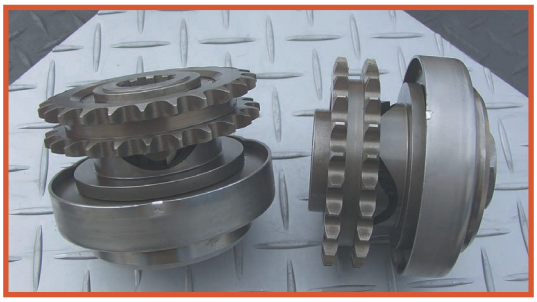

B

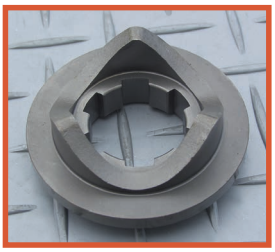

C



D

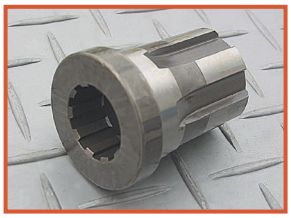

E



7

F



94-180

G. *HIGH PERFORMANCE COMPENSATOR KIT*

G



94-101



This new Premium High Performance Compensator Kit has been engineered with heavier springs and increased travel to support the high torque output associated with high compression & large displacement engines. Designed to outperform the Original Equipment compensator.... Compensator features improved oil passages and a needle bearing thrust washer that improves the overall operation of the components.

94-100 Fits: 2006 and later Dyna / 2007-2013 Touring & Trike / 2007 and later Softail models. SOLD AS KIT
94-101 Replacement Spring Pack SOLD EA.

A. *MILWAUKEE-EIGHT SOLID COMPENSATOR KIT 34T*

These new compensator sprockets reduce noise and improve engine starting along with starter life. Also aids in better throttle response and smoother shifting due to the reduction in weight. Easy to install, no other parts needed. Sold as kit, instructions included.

94-105 M8 solid compensator kit 34T, 2007 up Big Twin & 2006 up Dyna models.
94-106 M8 solid compensator kit 34T, 2017 & Later Big Twin & 2006 up Dyna models.



B. *MILWAUKEE-EIGHT HIGH PERFORMANCE SPROCKET COMPENSATOR KIT*

These new M8 model sprocket compensator kits have been produced for high performance applications.
Includes a heavy duty spring kit, CNC precision machined & polished parts that out-preform the OEM standard equipment.

94-107 Premium M8 sprocket compensator kit / Replaces OEM 40100076



7

C









D



C. *PBI COUNTERSHAFT SPROCKETS*

These high quality sprockets are machined on computer controlled lathes from solid high grade alloy steel. They are broached specially for maximum spline-to-shaft contact providing optimum load bearing and then are heat-treated for long life and extended wear resistance.

ALL BIG TWIN 1936 THRU 1979

94-300 22 Tooth. OEM 35203-36. SOLD EACH
94-301 23 Tooth.
94-302 24 Tooth.
94-303 25 Tooth.

BIG TWIN 4 SPEED 1980 & LATER

SOLD EACH
94-305 23 Tooth. OEM 33337-83.
94-306 24 Tooth.
94-307 25 Tooth.

SPORTSTER® 1954 THRU EARLY 1979

94-309 21 Tooth. OEM 35205-52A. SOLD EACH
94-310 22 Tooth.
94-311 23 Tooth.

SPORTSTER® 1991 & 1992

94-319 21 Tooth. SOLD EACH
94-320 23 Tooth. OEM 37709-89.

D. *COUNTERSHAFT SPROCKETS FOR BIG TWIN*

For all Big Twin 1930 thru 1979.
94-52 22 Tooth. OEM 35203-36. SOLD EACH
94-112 23 Tooth.
94-113 24 Tooth.
94-114 25 Tooth.
For Big Twin 4 speed 1980 thru 1985.
94-154 22 Tooth. OEM 33338-83. SOLD EACH
94-155 23 Tooth. OEM 33337-83.
94-165 25 Tooth.
For Big Twin 5 speed, chain drive, 1980 thru 1984.
94-213 21 Tooth. SOLD EACH
94-172 22 Tooth. OEM 33336-83.
94-214 23 Tooth.
94-215 24 Tooth.

A. *5 SPEED CONVERSION TO CHAIN WITH OFFSET*

Fits late 1994 & later but will also fit 1983 thru early 1993 if used with Midwest part No. **96-826** or OEM 33344-94 spacer, 12067A seal and 11165 O-ring. Use stock nut and lock plate Midwest part No. **94-381**.

.750 OFFSET — 530 CHAIN

94-1	With 21 tooth.	SOLD EACH.
94-2	With 22 tooth.	
94-3	With 23 tooth.	
94-4	With 24 tooth.	
94-5	With 25 tooth.	

1.060 OFFSET — 530 CHAIN

94-6	With 23 tooth.	SOLD EACH.
94-7	With 24 tooth.	

A

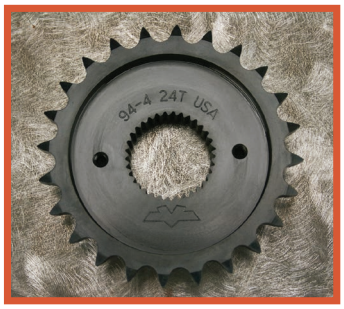

B. *BELT TO CHAIN CONVERSION KIT FOR WIDE TIRE*

24 Tooth conversion kit allows for installation of up to 150 series tires. Can also be used for final drive ratio changes. The special offset sprocket and spacer moves the chain away from the tire. Kit fits Softail® models 1986 & later when using an FL rear chain sprocket. Fits FXR models 1985 & later when using an FXR rear chain sprocket.

94-284 Conversion kit. SOLD AS KIT

NOTE: Must use 1984 thru early 1994 transmission spacer OEM 33334-85 and seal OEM 12050 (our part No. **95-736**).

B



C. *ULTIMA REAR PULLEY / SPROCKET SPACERS*

1999 & earlier hubs

58-180	0.125" Spacer (1/8").
58-380	0.250" Spacer (1/4").
94-389	0.3125" Spacer (5/16").
58-381	0.375" Spacer (3/8").
58-382	0.500" Spacer (1/2").
58-383	0.750" Spacer (3/4").
58-384	0.937" Spacer (15/16").
58-385	1.10" Spacer (1-7/64").
58-386	1.25" Spacer (1-1/4").

2000 & later hubs

58-580	0.125" Spacer (1/8").
58-581	0.250" Spacer (1/4").
58-582	0.3125" Spacer (5/16").
58-583	0.375" Spacer (3/8").
58-584	0.500" Spacer (1/2").
58-585	0.750" Spacer (3/4").
58-586	0.937" Spacer (15/16").
58-587	1.10" Spacer (1-7/64").
58-588	1.25" Spacer (1-1/4").

C



SOLD EACH

D



7

D. *BIG TWIN INNER PRIMARY SPACERS*

Billet 6061 aluminum spacers are used to offset the inner primary for custom wide tire applications. Used in conjunction with our offset transmission base plates, moving the driveline to the left can be a "bolt-on" operation.

96-839	1/4" Inner primary spacer.	SOLD EACH
96-841	1/2" Inner primary spacer.	
96-931	1/2" Inner primary spacer (polished).	
96-861	3/4" Inner primary spacer.	
96-930	3/4" Inner primary spacer (polished).	
96-851	1" Inner primary spacer.	
96-929	1" Inner primary spacer (polished).	
96-884	1-1/4" Inner primary spacer.	
96-927	1-1/4" Inner primary spacer (polished).	
96-885	1-1/2" Inner primary spacer.	
96-928	1-1/2" Inner primary spacer (polished).	
96-840	Transmission plate for Softail® with 1/2" offset.	SOLD EACH

E



F



E. *COUNTERSHAFT SPROCKET FOR H-D® 45"*

17 Tooth countershaft sprocket with seal. OEM 35204-41.

94-53 Fits all 45" and Servi-Car, 1941 thru 1967. SOLD EACH

F. *PBI OFFSET MAINSHAFT SPROCKETS*

Fits Big Twin 5-speed models 1986-2006 (except 2006 6-speed DynaGlide®) Total offset of zero. Uses full spline of 0.7636 in.

94-126 Offset mainshaft sprocket, 24T. SOLD EACH

7

A



B



C





D



F



E



CHROME PLATED

A. *DISH TYPE REAR SPROCKET FOR FXR*

For FXR models 1982 thru 1985, with chain rear drive.

94-170 48 Tooth. OEM 40954-81. SOLD EACH
94-173 49 Tooth.
94-171 51 Tooth. OEM 40954-83.

B. *SPROCKETS FOR SPORTSTER®*

Fits Sportster® 1952 thru 1978. **PLEASE NOTE:** 24 Tooth sprocket requires extra clearance in the case and cover for the chain .

94-84 22 Tooth. SOLD EACH
94-124 23 Tooth.
94-125 24 Tooth.

C. *TRANSMISSION COUNTERSHAFT SPROCKETS FOR SPORTSTER®*

Fits Sportster® XL and XLS 1979 thru 1984.

94-163 22 Tooth. SOLD EACH
94-160 23 Tooth.
94-162 24 Tooth.

Fits Sportster® late 1984 thru 1990.

94-176 21 Tooth. OEM 35208-84. SOLD EACH
94-177 22 Tooth.

D. *DRUM BRAKE SPROCKETS*

BIG TWIN

94-33 1930 Thru 1957. 51 Tooth. Includes rivets & dowels. Plain metal. OEM 41470-30. SOLD AS KIT
94-85 1962 Thru 1966. 51 Tooth. Includes rivets & dowels. Plain metal. OEM 41470-62. SOLD AS KIT
94-55 1967 Thru 1972. 51 Tooth. Includes rivets & dowels. Plain metal. OEM 41470-67. SOLD AS KIT

SPORTSTER®

94-33 Fits all years. 51 Tooth. Includes rivets & dowels. Plain metal. OEM 41470-30 & 41470-70. SOLD AS KIT

E. *DISC BRAKE SPROCKETS*

BIG TWIN

Fits 1973 thru 1985, 4 speed. Dished.

94-144 48 Tooth. Plain metal. SOLD EACH
94-143 48 Tooth. Chrome.
94-141 49 Tooth. Plain metal.
94-156 49 Tooth. Chrome.
94-95 51 Tooth. Plain metal. OEM 41470-73.
94-96 51 Tooth. Chrome. OEM 41470-73.

SPORTSTER®

Dished.

94-144 Fits 1979 thru 1981. 48 Tooth. Plain metal. SOLD EACH
94-143 Fits 1979 thru 1981. 48 Tooth. Chrome.
94-141 Fits 1979 thru 1981. 49 Tooth. Plain metal.
94-156 Fits 1979 thru 1981. 49 Tooth. Chrome.
94-95 Fits 1979 thru 1981. 51 Tooth. Plain metal. OEM 41470-73.
94-96 Fits 1979 thru 1981. 51 Tooth. Chrome. OEM 41470-73.

Flat (not dished).

94-168 Fits 1982 thru 1985. 47 Tooth. Plain metal.
94-169 Fits 1982 thru 1985. 48 Tooth. Chrome. OEM 41470-82.
94-97 Fits 1986 thru 1992. 47 Tooth. Chrome.
94-98 Fits 1986 thru 1992. 48 Tooth. Chrome. OEM 41470-86.
94-99 Fits 1986 thru 1992. 49 Tooth. Chrome.

F. *MOTOR SPROCKETS FOR BIG TWIN*

FOR TAPERED SHAFT SOLD EACH

94-119 24 Tooth. OEM 40211-30.
94-120 25 Tooth. OEM 40212-30.

FOR LATE SPLINED SHAFT

94-167 22 Tooth. OEM 40209-55. SOLD EACH
94-122 24 Tooth. OEM 40211-55.
94-123 25 Tooth.

A. *PULLEY INSERTS*

70 Tooth pulley for Big Twin 1980 & later.

58-267 Eight-hole insert. OEM 91733-85. SOLD EACH

65 Tooth pulley for Big Twin 1980 & later.

58-440 Eight-hole insert. OEM 40317-94. SOLD EACH

61 Tooth pulley for Big Twin 1980 & later and Sportster® 5 speed 1991 & later.

58-284 Eight-hole insert for Sportster®. OEM 40279-91. SOLD EACH

58-285 Eight-hole insert for Big Twin. OEM 40284-90.

7/16-14 x 1.5" Long; kit for Big Twin & Sportster®, rear pulley or rear sprocket, cast wheel. Replaces OEM 3769.

41-899 Colony kit. SOLD AS KIT

40-28 Midwest Acorn kit.

7/16-20 x 1.5" Long; kit for Big Twin, rear pulley, spoke wheel. Replaces OEM 4726.

41-900 Colony kit. SOLD AS KIT

40-27 Midwest Acorn kit.

7/16-20 x 1.25" Long; kit for Big Twin & Sportster®, rear sprocket. Replaces OEM 41197-73.

41-898 Colony kit. SOLD AS KIT

A

CHROME PLATED

58-285



7

B. *MIDWEST REPLACEMENT PULLEYS*

TRANSMISSION PULLEY

94-378 32T Trans pulley. Fits 1985 & later if used with sprocket spacer part No. 96-826 below (order separately). Kit includes nut, lock, and lock bolts. SOLD AS KIT

TRANS PULLEY HARDWARE

94-381 Mounting kit. Includes nut, lock and two bolts. Replaces OEM 35211-91, 40251-91, and 3594. SOLD AS KIT

96-825 Trans sprocket spacer, 0.85", for late 1984 thru early 1994. Replaces OEM 33334-85. SOLD EACH

96-826 Trans sprocket spacer, 0.60", for late 1994 & later. Replaces OEM 33344-94. SOLD EACH

B

94-378

94-381



C. *M8 TRANSMISSION PULLEYS*

These NEW transmission belt pulleys are precision made for Milwaukee 8 motorcycles. Available in 3 x different ratios 31T power, 34T overdrive & 32T stock replacement.
Fits ALL M8 models 2017 up.

94-190 Trans M8 belt pulley 34T Overdrive. (6.4% less RPM)

94-191 Trans M8 belt pulley 32T Stock replacement.

94-192 Trans M8 belt pulley 31T Power. (3% more RPM)

C



94-190

ANDREWS

A



94-265

A. *ANDREWS TRANSMISSION PULLEY FOR 5 SPEED BELT DRIVES*

BELT DRIVE PULLEY RATIOS 1985 THRU 1993 (37T CLUTCH — 24T ENGINE SPROCKET)

TRANS.	REAR WHEEL[1]	OVERALL[2]
29	70	3.72
30	70	3.60
32 (Stock)	70	3.37
34	70	3.17
29	61	3.24
30	61	3.13
32 (Stock)	61	2.94
34	61	2.76

BELT DRIVE PULLEY RATIOS 1994 & 1995 (36T CLUTCH — 25T ENGINE SPROCKET)

TRANS.	REAR WHEEL[3]	OVERALL[2]
29	70	3.48
30	70	3.36
32 (Stock)	70	3.15
34	70	2.96
29	65	3.23
30	65	3.12
32 (Stock)	65	2.93
34	65	2.75

NOTE 1: 1993 Softails® use 61T rear wheel sprockets.
NOTE 2: Overall ratio = Engine revs per rear wheel rev. High numbers for acceleration; low for cruising.
NOTE 3: 1995 Softails® use 65T rear wheel sprockets.

For better acceleration: 29T Power pulley - 9% more RPM.
94-264 For 1985 thru 1993. SOLD EACH

For better acceleration: 30T Power pulley - 6% more RPM.
94-298 For 1994 & later. SOLD EACH

For smoother cruising: 34T Overdrive pulley -6% more RPM. 180 RPM engine RPM @ 60 MPH.
94-265 For 1985 thru 1993. SOLD EACH
94-299 For 1994 & later.

7

B



U.S.A. MADE

41-900

B. *HARDWARE KITS FOR REAR SPROCKET & PULLEY*

C



CHROME PLATED END CAPS

C. *"PYRAMID" AXLE ADJUSTERS*

Axle adjuster with chrome end caps of die-cast steel. The chrome-steel nuts have a long shank tapped to allow a full range of axle adjustment.

5-119 Fits 1973-85 FL, FX, 1980-86 FXWG, 1984-85 FXST and 1979-91 XL. OEM #47554-73A. SOLD AS PAIR

D



D. *REAR AXLE BLOCK ADJUSTER FOR H-D®*

Rear axle block adjusters for late model swing arms aid in better alignment of rear axle and help prevent swing arm tube collapse due to over tightening. Replaces OEM 41570-77.

5-130 Fits FX & FL, 1973 thru 1985 (except FXRS, FXRT, FLT & FLHT, 1984 & 1985), also fits FXR 1982 thru 1989, FLT 1980 thru 1983, XLCR 1977 & 1978, and XL 1979 thru 1989.
SOLD AS PAIR

A. *REAR AXLE ADJUSTERS FOR SOFTAIL®*

CHROME STEEL AXLE ADJUSTER KITS

5-235 For Softail® 1987 thru 1999. Replaces OEM 47577-86, 47579-86 & 7783. **SOLD AS KIT**

CHROME HEX HEAD ADJUSTER BOLT

5-146 For 1986 thru 1992. 3/8-16 x 2.50", OEM 47579-86 & 7783. Colony. **SOLD AS KIT**

41-128 For 1993 thru 1999. 3/8-16 x 3.0", OEM 47579-93.Colony. **SOLD AS KIT**

CHROME AXLE ADJUSTER SPACER

5-147 Fits 1986 thru 1999, chrome. OEM 47577-86. **SOLD AS PAIR**

B. *REAR CHAIN ADJUSTERS*

These are high quality heat treated & chrome plated. They are available with chrome plated lock nuts assembled to insure properly fitting threads.

5-62 For Sportster® 1978 & earlier. **SOLD AS PAIR**

5-61 For Big Twins 1936 thru 1972. **SOLD AS PAIR**

5-63 For FL & FX 1973 thru 1985, Softail® 1984 & 1985 and Sportster® 1979 & later. **SOLD AS PAIR**

5-77 Cover, rear fork end & nuts for above part No. 5-63. Colony. **SOLD AS KIT**

41-108 Swingarm adjuster & end plates for Dyna® 1991 & later. **SOLD AS KIT**

41-109 Swingarm end plates for Dyna® 1991 & later. **SOLD AS PAIR**

41-114 Rear axle adjuster for FLST 2000. OEM 47579-00. **SOLD AS PAIR**

C. *HEAVY DUTY AXLE ADJUSTER FOR FXR*

Bright chrome axle adjusters for FXR 1982 thru 1994. Helps prevent swing arm tube collapse due to overtightening.

5-157 Heavy duty FXR axle adjusters. **SOLD AS KIT**

C

CHROME PLATED



A



5-235

ALL PARTS CHROME PLATED



5-146



5-147

B



5-63



5-62



5-61



5-77



41-108



41-109



41-114

7

D. *CHAIN ADJUSTER & REPLACEMENT SHOE KIT FOR '06-'17 DYNA, '07-'17 SOFTAIL, '07-'16 DRESSER, 09-16 FL TRIKE MODELS*

D

77-912



NEW!

77-912 Revox manual primary chain adjuster kit replaces OEM 36500020. Fits: 06-17 Dyna, 07-17 Softail, 07-16 Dresser, 09-16 FL Trike models.

77-913 Replacement chain adjuster shoe kit for Midwest #77-912. Kits includes: new adjuster shoe, 2 x lock plates and bolts.



77-913

A

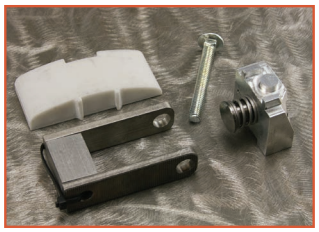

A. *HYDRAULIC AUTOMATIC CHAIN TENSIONER*

This new automatic chain tensioner uses the oil in the primary as its own reservoir. It has its own pump and operates like a hydraulic lifter in the engine. Once you install it there is no need to adjust the primary chain again. It will hold up to engines over 100hp. It maintains a constant zero lash between acceleration and deceleration. No more chain slap inside expensive primary cases or excessive vibration.

5-234 Hydraulic chain tensioner for 1965 thru 2006. SOLD EACH

B BIG TWIN





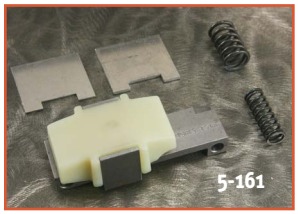

SPORTSTER®



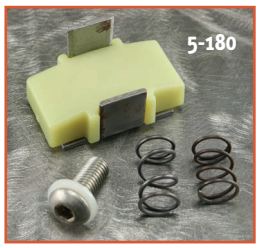



B. *M6 AUTOMATIC CHAIN TENSIONERS*

BIG TWIN

The **U.S.A. MADE** M6 automatically adjusts the primary chain on Big Twin. Now you can have the proper chain tension during acceleration & deceleration with the big benefit of improved shifting. Other benefits include prolonged chain life & less vibration because of the constant control of the primary chain. Installation time needed is less than 1 hour.

5-158 Fits all Big Twin 1965-2000, including TC88® models. SOLD AS KIT
5-153 Fits all Big Twin TC88® models 2001-2006. SOLD AS KIT
5-161 Fits Big Twin models 2007-later, & Dyna® 2006-later. SOLD AS KIT
5-159 **Re**placement shoe only. Fits above kits. SOLD EACH

SPORTSTER®

The M6 chain tensioner, when installed in your primary case, automatically self-adjusts the tension on the primary chain to provide constant and even tension which improves your transition in gear shifting, reduces shifting noise, extends chain life and makes for a much smoother ride.

5-179 Chain tensioner for Sportster® with 4 speed, 1977 thru 1990. SOLD AS KIT
5-180 Chain tensioner for Sportster® with 5 speed, 1991 thru 2003.
5-187 Chain tensioner for Sportster® with 5 speed, 2004 & up.

C

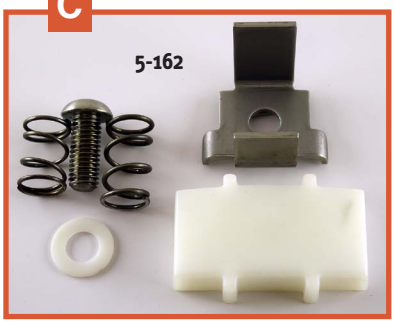

C. *SOLO XL 04 UP PRIMARY CHAIN TENSIONER KIT*

This custom tensioner kit keeps the chain adjusted properly with a spring loaded action. Includes mount bracket, guides, springs, shim,hardware and nylon pad.

5-162 Chain tensioner for XL 2004 up models. SOLD AS KIT

D

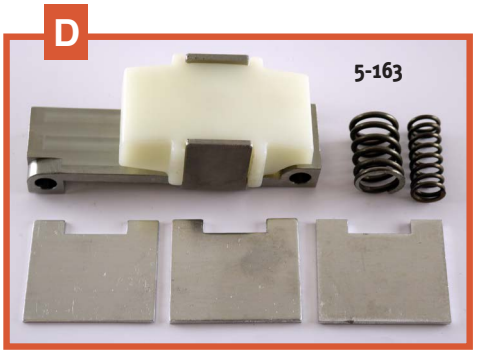

D. *SOLO M8 PRIMARY CHAIN TENSIONER KIT*

This custom tensioner kit keeps the chain adjusted properly with a spring loaded action. Includes mount bracket, guides, springs, shim, adjuster pad. SOLD AS KIT

Fits: Electra Glide Ultra Classic FLHTCU/I / Electra Glide Ultra Limited FLHTK / Electra Glide Ultra Limited Low FLHTKL 2017, 2018, 2019. Freewheeler FLRT 2017, 2018, 2019 / Road Glide FLTRX / Road Glide Special FLTRXS / Road Glide Ultra FLTRU 2017, 2018, 2019. Road King FLHR/I / Road King Special FLHRXS 2017, 2018, 2019.
Softail Breakout 114 FXBRS / Softail Breakout FXBR / Softail Deluxe FLDE / Softail Fat Bob 114 FXFBS / Softail Fat Bob FXFB 2018, 2019.
Softail Fat Boy 114 FLFBS / Softail Fat Boy FLFB 2018, 2019 & Softail FXDR 114 FXDRS 2019. Softail Heritage Classic 114 FLHCS / Softail Heritage Classic FLHC 2018, 2019. Softail Low Rider FXLR / Softail Slim FLSL / Softail Sport Glide FLSB / Softail Street Bob FXBB 2018, 2019. Street Glide FLHX/I / Street Glide Special FLHXS / Tri Glide Ultra Classic FLHTCUTG 2017, 2018, 2019.

5-163 Chain tensioner for solo M8 models.

ULTIMA® FINAL DRIVE CHAINS

52-256
52-264
52-272

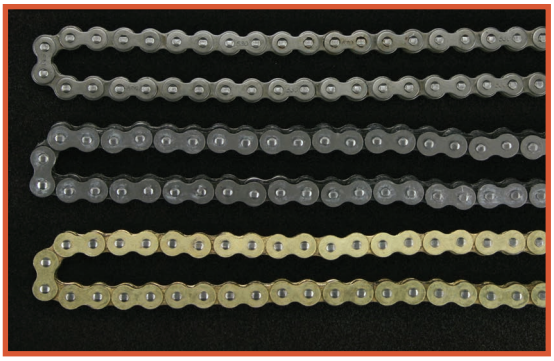

Ultima® Chains are engineered to strict standards for use in high horsepower applications & offered in 120 link lengths or 25 foot rolls. 530 standard chain has an ultimate tensile strength of 7200 lbs. XBL, XLO & ENP chains have an ultimate tensile strength of 8900 lbs. Rollers, bushings & plates are designed for reduced wear & long lasting performance.



MASTER LINK



HALF LINK

When removing or installing Ultima® Chains it is recommended that sprocket wear be checked at the same time & replace as necessary.

Ultima® Chains & components are not interchangable with other chain manufacturers' products.

25FT ROLL



STANDARD = Durable carbon steel chain.

XBL = O-ring chain. Has oil impregnated bushings that provides the chain with lasting built-in protection. The need for periodic lubrication is reduced.

XLO = Ultima's top of the line O-ring chain that can sustain heavy workloads. Sealed lubrication to help reduce contamination.

ENP = Durable nickel plated O-ring chain.

SEE OUR CHAIN BREAK & RIVET TOOLS IN SEC 12, PAGE 17

SOLD EACH

	CHAIN SIZE	STANDARD	XBL	XLO	XLO SILVER	XLO GOLD	ENP
FINAL DRIVE CHAIN	530/120	52-256	52-260	52-264	52-268	52-272	52-276
BULK CHAIN	25 FT. ROLL	52-257	52-261	52-265	52-269	52-273	52-277
530 MASTER LINK	LINK	52-258	52-262	52-266	52-270	52-274	52-278
530 HALF LINK	HALF LINK	52-259					

ULTIMA® PRIMARY CHAINS



52-280 74" & 80" Primary standard, 1983 & earlier, also FXST & FLST, 1984 & later. **428/2/82**

52-281 80" Primary 1984 & later FLT, FXRS, FXRT. **428/2/76**



DIAMOND® MOTORCYCLE CHAIN

NOTHING OUTLASTS A DIAMOND!®

BULK CHAIN PARTS

63-67 530 XLO connecting link

67-75 530 Bulk chain (part no. per ft.)

ULTIMA® 2" LATE MODEL PRIMARY BELT DRIVE

The all new Ultima® 2" Late Model belt drive has been designed to effortlessly transfer the torque & power of even the most brutal high horse power engines. We have taken our time tested & proven technology of clutch drive systems & applied it to this late model belt drive. Designed to fit 06-present Dynas & 07-present Softails®, this 2" belt drive will improve the look & performance of your motorcycle without emptying your pocketbook. Distinguishing features include a premium polished 6061-T6 billet aluminum backing plate, high performance Ultima® clutch plates, Ultima® 2" belt & stainless clutch basket inserts to eliminate clutch plate wear on the outer basket. 53T motor pulley & 72T transmission pulley. Not designed for use with mid-controls. Will work with floor-boards although some spacing may be required.



58-960 2" Late Model Belt Drive Billet Polished.
06'-Present Dyna, 07'-Present Softail®

58-990 2" Late Model Belt Drive Billet **Black**.
06'-Present Dyna, 07'-Present Softail®

*Instructions included and available online @ **www.ultimaproducts.com**

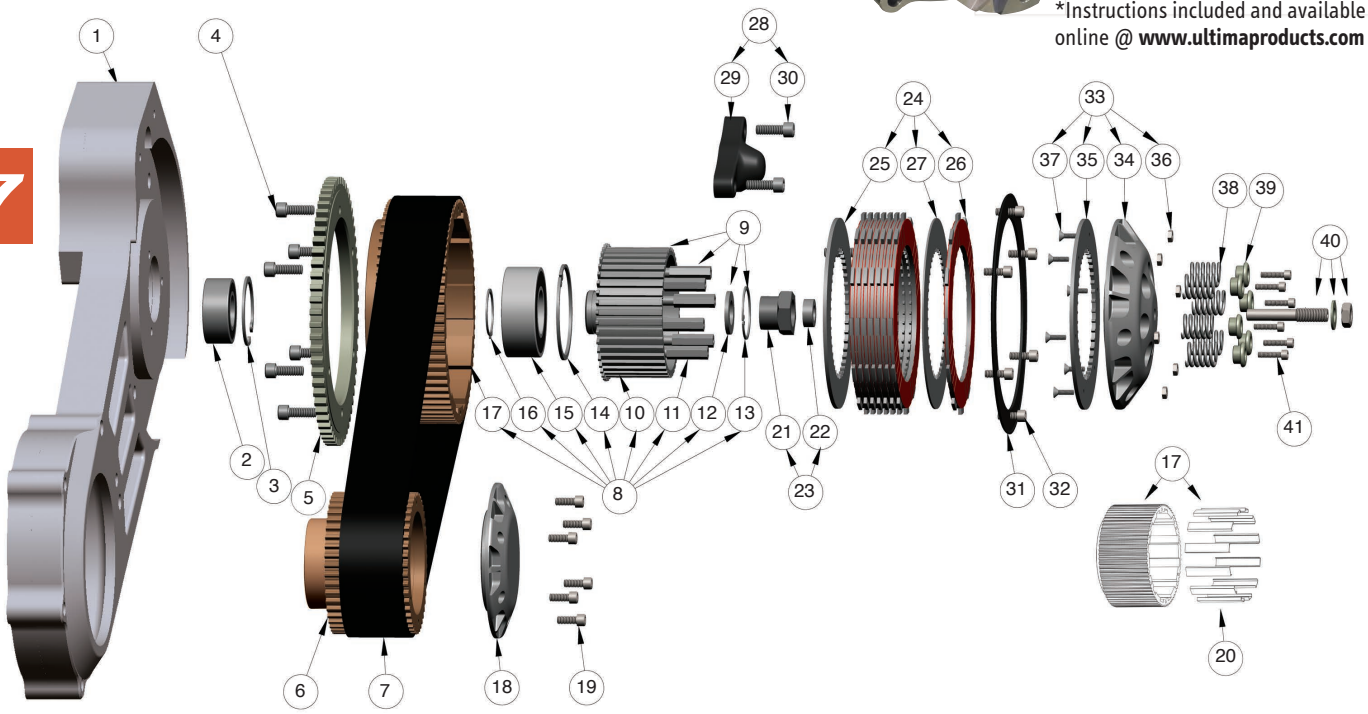

Item #	Qty.	Part #	BLACK #	Component
1	1	58-963	58-668	Motor Plate-Billet
1	1	58-986	58-667	Motor Plate Assembly
2	1	58-964		Bearing for 2008-Later, ID=24.82
	1	58-707		Bearing for 1990-2007, ID=25.02
3	1	58-708		Snap Ring
4	12	58-736		HX-SHCS 0.25-20 x 0.625 x 0.625-S
5	1	58-976		Gear, Starter Ring
6	1	58-970		Pulley, Motor 53T 2" Drive
7	1	58-985		Belt, GoodYear 2" 8mm 140t -4
8	1	58-971		Complete Trans Pulley Assembly
9	1	58-972		Clutch Hub Assembly
10	1	58-973		Clutch Hub
11	6	58-833		Clutch Spring Stud
12	1	58-756		Washer, Clutch Hub
13	1	58-757		N5000-137 Snap Ring
14	1	58-738		Retaining Ring, Clutch assy Outer
15	1	58-737		Bearing, Ball, Double Row Angular Contact,
16	1	58-739		Retaining Ring, Clutch Assy Inner
17	1	58-975		Pulley, Transmission 72T with insert
18	1	58-981	58-673	Motor Pulley Cap, billet
19	6	58-736		HX-SHCS 0.25-20 x 0.625 x 0.625
20	1	58-925		S/S Pulley Inserts, 2"
21	1	58-741		HTNUT 0.75-16-D-S
22	1	95-778		Clutch Rod Seal

Item #	Qty.	Part #	BLACK #	Component
23	1	58-622		Clutch Retaining Nut Assy
24	1	58-769		Complete Replacement Clutch Assy
25	1	-------		Clutch Drive Plate, Steel Lower 0.119
26	8	-------		Clutch Plate, Friction
27	7	-------		Clutch Plate, Steel 0.049
28	1	58-987	58-669	Cover Assembly, Starter Gear
29	1	-------	58-670	Cover, Starter Gear,billet
30	2	58-798		HX-SHCS 0.3125-18 x 0.75 x 0.75-S
31	1	58-980		Belt Guide, Ultima 2" Steel/Chrome
32	6	58-736		HX-SHCS 0.25-20 x 0.625 x 0.625-S
33	1	58-977	58-671	Pressure Plate Assembly
34	1	58-978	58-672	Pressure Plate, billet
35	1	58-772		Clutch Drive Plate, Upper
36	6	58-773		MSHXNUT 0.164-32-S-N
37	6	58-774		SCHCSREW 0.164-32 x 0.625 x 0.625-HX-S
38	6	96-251		Spring, Clutch, Medium
	6	96-249		Spring, Clutch, Heavy Duty
	6	96-250		Spring, Clutch, Extra Heavy Duty
39	6	58-852		Clutch Spring Guide
40	1	58-779		Clutch Adjuster Assy
41	6	58-835		SHCS M6X25
42	1	58-982		Pulley Bolt Washer 1.98"x.59"x.30" black oxide coated
43	1	58-983		Spacer 2.86"x1.25"x.35" black oxide coated
44	1	58-984		Spacer 2.86"x1.25"x.13" zinc plated

ULTIMA® 2" EVO & TWIN CAM® SOFTAIL® PRIMARY BELT DRIVE

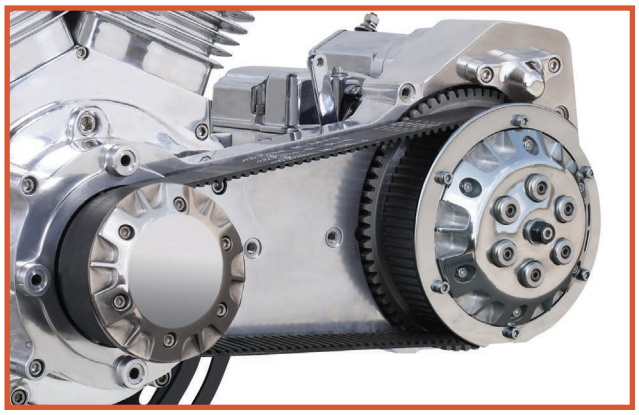

Midwest's commitment to engineering excellence and competitive pricing are very apparent in Ultima's 2" Old School belt drive assembly, where form and function meet. With High Performance Alto clutch plates and a 2" Goodyear belt, this high quality belt drive assembly will surely enhance the look and performance of any American motorcycle. Designed to withstand all the pavement pounding power you can throw at it, and with a more centered weight distribution this belt drive is a textbook example of getting the most "bang for your buck". **For Evo & Twin Cam® Softail® and custom applications.**

*Instructions included and available online @ www.ultimaproducts.com.

BELT DRIVE ASSEMBLIES

58-850 2" Old School Belt Drive Assembly - Polished
58-941 2" Old School Belt Drive Assembly - Black finish

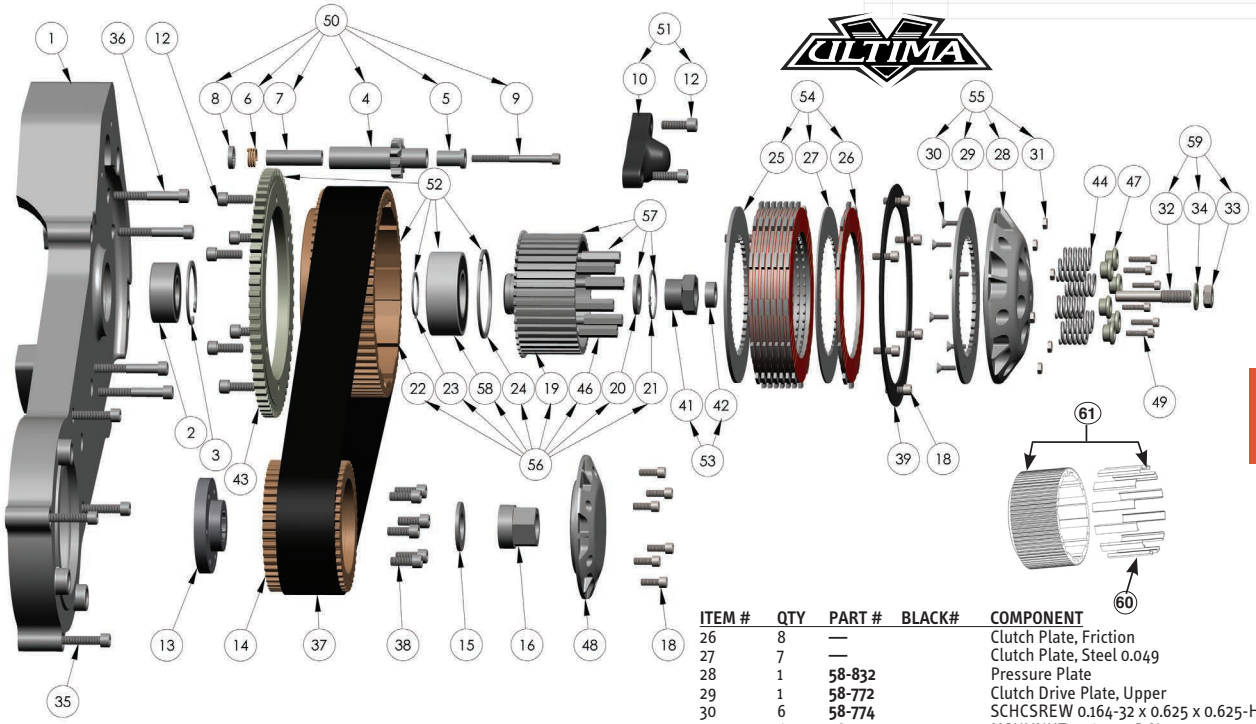

ITEM #	QTY	PART #	BLACK #	COMPONENT
1	1	58-940	58-942	Motor Plate, Cast, Softails® 90'-06'
2	1	58-707		Bearing, Ball, Double Row Angular Contact, INA 3200 Series
3	1	58-708		N5000-206 Snap Ring
4	1	58-710		Gear, Starter Drive, One Piece
5	1	58-711		Starter Bushing
6	1	58-712		Starter Spring
7	1	58-713		Starter Spacer
8	1	58-714		Spring Stop
9	1	58-718		Starter Bolt--1/4-20 x 2.75
	1	58-719		Starter Bolt--10-32 x 2.75
10	1	—		Cover, Starter Gear
12	2	58-798		SHCS 0.3125-18 x 0.875 x 0.875-S
13	1	58-605		Collar, Sprocket Shaft, no offset
		*58-606		1/4" Offset Collar, Sprocket Shaft
		*58-607		1/2" Offset Collar, Sprocket Shaft
		*58-608		3/4" Offset Collar, Sprocket Shaft
		*58-609		1" Offset Collar, Sprocket Shaft
		*58-610		1-1/4" Offset Collar, Sprocket Shaft
		*58-611		1-1/2" Offset Collar, Sprocket Shaft
		*58-612		1-3/4" Offset Collar, Sprocket Shaft
		*58-613		2" Offset Collar, Sprocket Shaft
14	1	58-824		Pulley, Motor 45T 2" Drive
15	1	58-726		Washer, 1.655 x 0.94 x 0.125
16	1	58-723		HTNUT 0.8750-14-D-S
		*58-724		Nut, Motor Pulley long (for 1-1/2-1-3/4" offset collar)
18	12	58-736		SHCS 0.25-20 x 0.625 x 0.625-S
19	1	58-828		Clutch Hub
20	1	58-756		Washer, Clutch Hub
21	1	58-757		N5000-137 Snap Ring
22	1	58-826		Pulley, Transmission 71T
23	1	58-739		Retaining Ring, Clutch Assy Inner
24	1	58-738		Retaining Ring, Clutch assy Outer
25	1	—		Clutch Drive Plate, Lower 0.119
26	8	—		Clutch Plate, Friction
27	7	—		Clutch Plate, Steel 0.049
28	1	58-832		Pressure Plate
29	1	58-772		Clutch Drive Plate, Upper
30	6	58-774		SCHCSREW 0.164-32 x 0.625 x 0.625-HX-S
31	6	58-773		MSHXNUT 0.164-32-S-N
32	1	58-780		SSFLATSKT 0.4375-20 x 1-HX-S
33	1	58-781		HJNUT 0.4375-20-D-S
34	1	58-782		FW 0.4375
35	4	58-797		SHCS 0.3125-18x1.5x1.5-S
36	4	58-799		SHCS 0.3125-18x2.25x1.125-S
37	1	58-752		Belt, GoodYear 2" 8mm 140t minus 3
	1	58-901		Belt, GoodYear 2" (use w/**58-940** motor plate)
38	6	58-796		SHCS 0.3125-18 x 0.75 x 0.75-S
39	1	58-761		Belt Guide, Ultima 2" Trans Pulley
41	1	58-741		HTNUT 0.75-16-D-S
42	1	95-778		Clutch Rod Seal
43	1	58-735		Gear, Starter Ring
44	6	96-251		Spring, Clutch - Medium (68lb @ 1")
	6	96-249		Spring, Clutch - Heavy Duty (82lb @ 1")
	6	96-250		Spring, Clutch - Extra Heavy Duty (98lb @ 1")
46	6	58-833		Clutch Spring Stud
47	6	58-852		Clutch Spring Guide
48	1	58-867	58-943	Motor Pulley Cap
49	6	58-835		Socket head cap screw
50	1	58-633		Gear Assembly, Starter Drive
	1	58-634		Upgrade: Gear Assembly, Starter Drive
51	1	58-720	58-945	Cover Assembly, Starter Gear
12, 52, 56	1	58-834		Complete Clutch Hub Assembly
52, 12	1	58-825		Transmission Pulley Assembly 71T
		58-923		Transmission Pulley, bare, w/stainless inserts 71T
		58-925		Stainless inserts for 2" pulley. Pkg.
53	1	58-622		Clutch Retaining Nut Assy
54	1	58-769		Complete Replacement Clutch Assy
55	1	58-829	58-944	Pressure Plate Assembly
57	1	58-827		Clutch Hub Assembly
58	1	58-737		Bearing, Ball, Double Row Angular Contact, INA 3200 Series
59	1	58-779		Clutch Adjuster Assy
60	1	58-925		Pulley Inserts only, 2"
61	1	58-923		Outer Pulley 71T w/inserts, 2"

ULTIMA® 2" BAGGER PRIMARY BELT DRIVE

Fitting 1990-2006 FLT,FLH &FXR models (Evo or Twin Cam®), these all new Ultima 2" Bagger beltdrives are a great addition for the rider who demands both reliability & good looks for the long haul. Features include a polished 6061-T6 billet aluminum backing plate, High Performance Alto clutch plates, Goodyear 2" belt, polished aluminum belt guard & cover, newly designed billet starter shaft housing & pulley covers. The 2" Bagger beltdrive has also been designed to work with most floorboards & primary mounted stock shift mechanisms.

*Instructions included and available online @ www.ultimaproducts.com.

58-853 2" Bagger Belt Drive Assembly, Polished
90-06 FLT,FLH,FXR

58-958 2" Bagger Belt Drive Assembly, Black
90-06 FLT,FLH,FXR



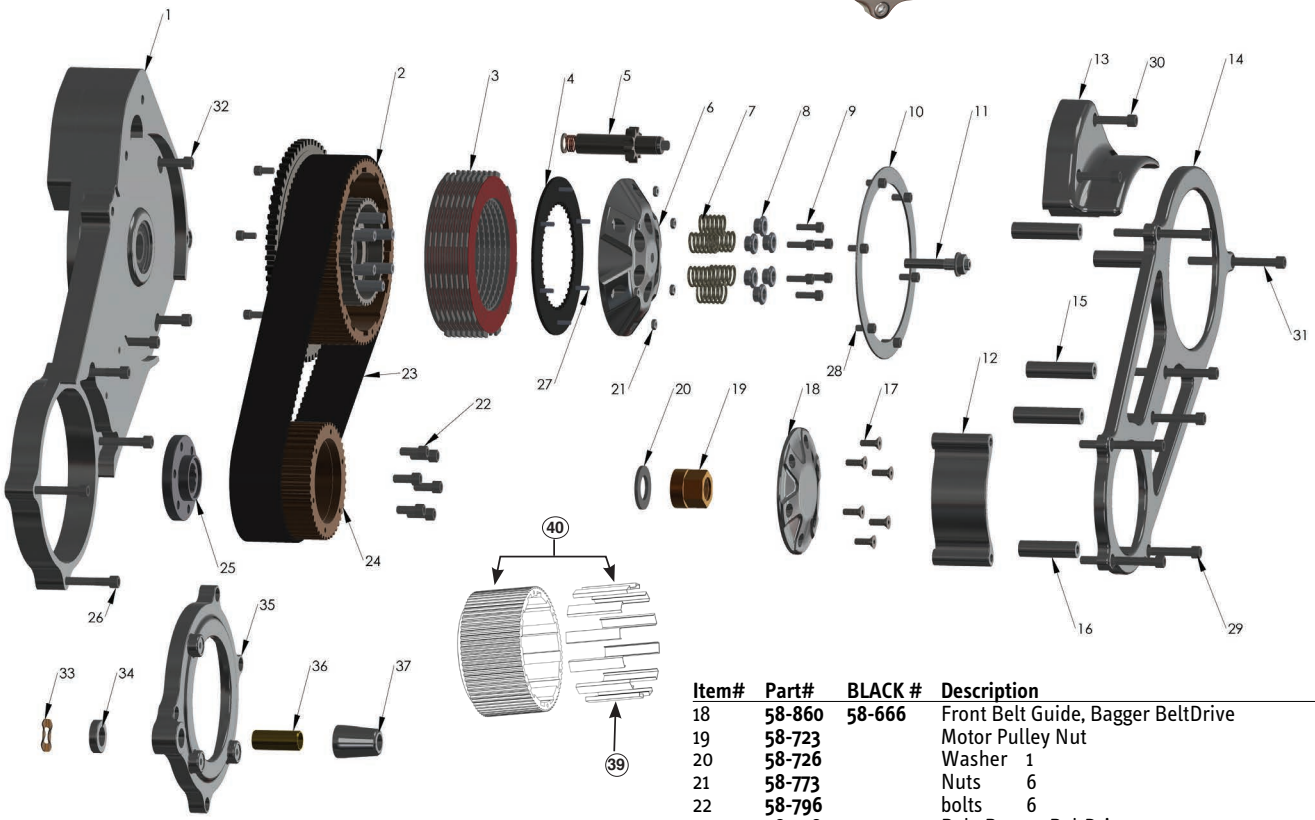

Item#	Part#	BLACK #	Description	QTY.
1	58-809	58-657	Motor Plate assembly, Bagger BeltDrive includes # 33, 34, 35, 36, 37	1
2	58-834		Complete Trans Pulley Assembly	1
	58-923		Transmission Pulley w/stainless inserts 71T	1
	58-925		Stainless inserts for 2" pulley.	Pkg
3	58-769		Clutch Plate Kit	1
4	58-772		Upper Drive Plate	1
5	58-633		Starter Gear Assembly	1
	58-634		Upgrade: Gear Assembly, Starter drive	1
6	58-830	58-660	Pressure Plate, Bagger BeltDrive	1
7	96-251		Spring, Clutch - Medium (68lb @ 1")	6
	96-249		Spring, Clutch - Heavy Duty (82lb @ 1")	6
	96-250		Spring, Clutch - Extra Heavy Duty (98lb @ 1")	6
8	58-852		Spring Guide	6
9	58-835		Bolt (M6)	6
10	58-761		Belt Guide**	1
11	58-779		Clutch Adjuster Assembly	1
12	58-854	58-661	Belt Guard, Bagger BeltDrive	1
13	58-855	58-662	Starter Cover w/bushing, Bagger BeltDrive	1
14	58-856	58-663	Outer Plate, Bagger BeltDrive	1
15	58-857	58-664	Spacer, Aluminum	4
16	58-858	58-665	Spacer, Aluminum	1
17	58-859		Counter Sunk Screws, 1/4-20 x 0.75"	6

Item#	Part#	BLACK #	Description	QTY.
18	58-860	58-666	Front Belt Guide, Bagger BeltDrive	1
19	58-723		Motor Pulley Nut	1
20	58-726		Washer 1	
21	58-773		Nuts 6	
22	58-796		bolts 6	
23	58-918		Belt, Bagger BeltDrive	1
24	58-821		44T Motor Pulley (Bagger Only)	1
25	58-605		Sprocket Shaft Collar	1
	*58-606		1/4" Offset Collar, Sprocket Shaft	
	*58-607		1/2" Offset Collar, Sprocket Shaft	
	*58-608		3/4" Offset Collar, Sprocket Shaft	
	*58-609		1" Offset Collar, Sprocket Shaft	
	*58-610		1-1/4" Offset Collar, Sprocket Shaft	
	*58-611		1-1/2" Offset Collar, Sprocket Shaft	
	*58-612		1-3/4" Offset Collar, Sprocket Shaft	
	*58-613		2" Offset Collar, Sprocket Shaft	
26	58-861		5/16-18 x 2" Socket Head Cap Screw	4
27	58-774		Screws 6	
28	58-862		1/4-20 x 0.5" Socket Head Cap Screw	6
29	58-863		5/16-18 x 3" Socket Head Cap Screw	3
30	58-864		5/16-18 x 1.5" Socket Head Cap Screw	2
31	58-865		5/16-18 x 3.5" Socket Head Cap Screw	4
32	58-866		5/16-18 x 2.5" Socket Head Cap Screw	3
33	58-890		Wave Washer	1
34	58-891		Shift spacer	1
35	58-892	58-658	Motorplate Sub-Plate, Bagger	1
36	58-893		Shift Bushing	1
37	58-894	58-659	Bushing Cover	1
38	58-718		Starter Bolt--1/4-20 x 2.75	
	58-719		Starter Bolt--10-32 x 2.75	
39	58-925		Pulley Inserts only, 2"	
40	58-923		Outter Pulley 71T w/inserts, 2"	

ULTIMA® EVO & TWIN CAM® SOFTAIL® 3.35" PRIMARY BELT DRIVES



ULTIMA DRAG RACE STYLE
PATENT# D,555,069



58-946

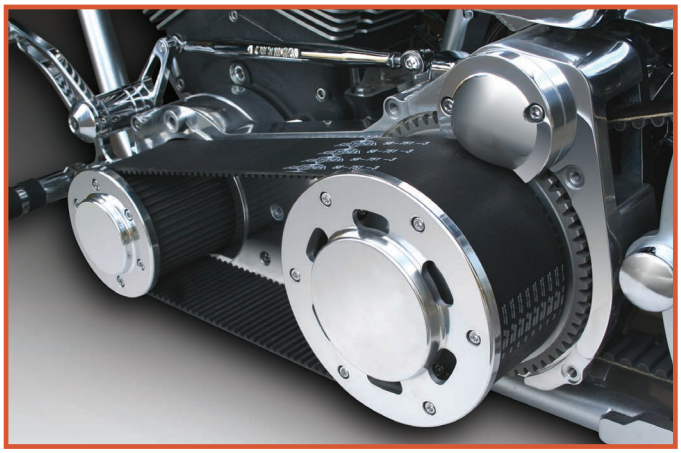

ULTIMA STREET STYLE



58-947

7

Ultima's 3.35" belt drive assembly revives the Old School drag race style primary drive at a new affordable price. The Drag Race style unit with features like the out board bearing support, extra plate clutch assembly and Goodyear 85mm wide (3.35") belts was designed to handle all the power you can throw at it. If you need to keep some extra cash try out the street version which has all the same features without the added cost of the out board bearing support. The Street units feature the same machining as the Drag Race Style so they can be upgraded with outboard supports anytime. **For Evo & Twin Cam® Softail® and custom applications.**

*Instructions included and available online @ www.ultimaproducts.com.

BELT DRIVE ASSEMBLIES

58-700	Cast Drag Race Style Belt Drive Assembly-- Polished, 1990-2006.
58-946	Cast Drag Race Style Belt Drive Assembly-- Black 1990-2006.
58-800	Billet Drag Race Style Belt Drive Assembly-- Polished, 1990-2006.
58-730	Street Style Belt Drive Assembly--Polished, cast backing plate, 1990-2006.
58-947	Street Style Belt Drive Assembly--Black, cast backing plate, 1990-2006.

NOTE: Softail® belt drive new for 2011. Revised fitment for 1990-2006. Check online for fitment updates. www.ultimaproducts.com

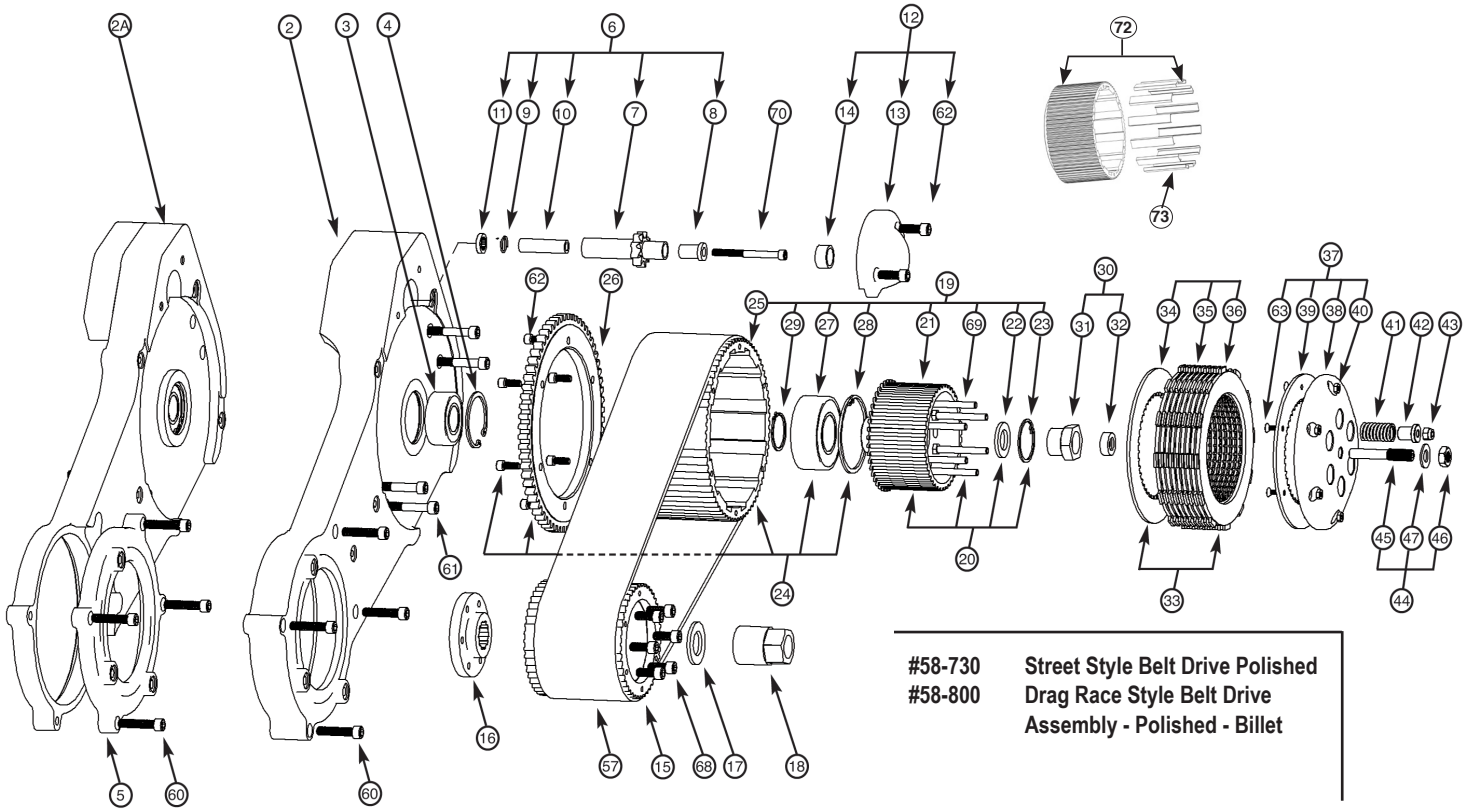

7

NOTE: Motor plates **58-940** & **58-935** have the part number stamped on the motor plate itself. Located on area behind the clutch basket. Also see fitment updates online at www.ultimaproducts.com.

1. Complete Assembly
2. **58-940** Motor Plate Assy. - Cast, includes #3 & #4 Fits Softails® 1990-2006
2A. **58-935** Motor Plate Assy. - Billet, includes #3 & #4 Fits Softails® 1990-2006
2B. **58-942** Motor Plate Assy. - Cast BLACK, includes #3 & #4 Fits Softails® 1990-2006
3. **58-707** Bearing, Ball, Double Row Angular Contact,
4. **58-708** Snap Ring
5. — Motor Sub Plate (Billet Motor Plate Only)
6. **58-633** Gear Assembly, Starter drive
58-634 Upgrade: Gear Assembly, Starter drive
7. **58-710** Gear, Start Drive, One piece
8. **58-711** Starter Gear Bushing
9. **58-712** Starter Spring
10. **58-713** Starter Gear Spacer
11. **58-714** Spring Stop
12. **58-715** Cover Assembly, Starter Gear
12.A **58-949** BLACK Cover Assembly, Starter Gear
13. **58-715** Cover, Starter Gear
14. **58-717** Bushing, Starter Gear
15. **58-725** Pulley, Motor 45T
16. **58-605** 0" Offset Collar, Sprocket Shaft
***58-606** 1/4" Offset Collar, Sprocket Shaft
***58-607** 1/2" Offset Collar, Sprocket Shaft
***58-608** 3/4" Offset Collar, Sprocket Shaft
***58-609** 1" Offset Collar, Sprocket Shaft
***58-610** 1-1/4" Offset Collar, Sprocket Shaft
***58-611** 1-1/2" Offset Collar, Sprocket Shaft
***58-612** 1-3/4" Offset Collar, Sprocket Shaft
***58-613** 2" Offset Collar, Sprocket Shaft
17. **58-726** Washer, 1.655 x .94 x .125
18. **58-727** Nut, Motor Pulley
***58-724** Nut, Motor Pulley long (for 1-1/2-1-3/4" offset collar)
19. **58-728** Complete Trans Pulley Assembly Includes 62, 26, 29, 24, 20.
20. **58-729** Clutch Hub Assembly
21. **58-755** Clutch Hub
22. **58-756** Washer, Clutch Hub
23. **58-757** Snap Ring
24. **58-733** Trans Pulley Assy 71T w/BRG (Includes 62, 26, 27, 28)
25. **58-922** Transmission Pulley, bare, w/stainless inserts 71T
58-924 Stainless inserts for 2" pulley. Pkg.
26. **58-735** Gear, Starter Ring
27. **58-737** Bearing, Ball, Double Row Angular Contact
28. **58-738** Retaining Ring, Clutch Assy Outer
29. **58-739** Retaining Ring, Clutch Assy inner
30. **58-622** Clutch Retaining Nut Assy
31. **58-741** Clutch Retaining Nut
32. **95-778** Clutch Rod Seal
33. **58-760** Complete Replacement Clutch Assy., 9 friction, 9 steel plates
34. — Clutch Drive Plate, Inner .119 Thick
35. — Clutch Plate, Friction
36. — Clutch Plate, Steel .049 Thick
37. **58-770** Pressure Plate Assembly
38. **58-771** Pressure Plate
39. **58-772** Clutch Drive Plate, Outer
40. **58-773** Nut .164-32-S-N (6)
41. **58-776** Clutch Spring - Medium (68lb @ 1")
96-252 Clutch Spring - Heavy Duty (82lb @ 1")
96-253 Clutch Spring - Extra Heavy Duty (105lb @ 1")
42. **58-777** Clutch Spring Guide
43. **58-778** Ny-Loc nut 1/4 - 28
44. **58-779** Clutch Adjuster Assy.
45. **58-780** Clutch Adjuster 0.4375-20x1-HX-S

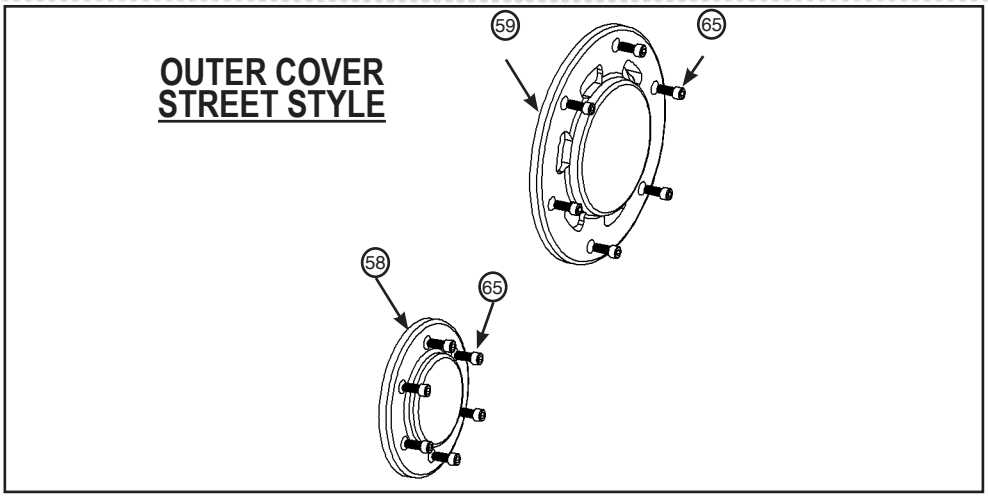

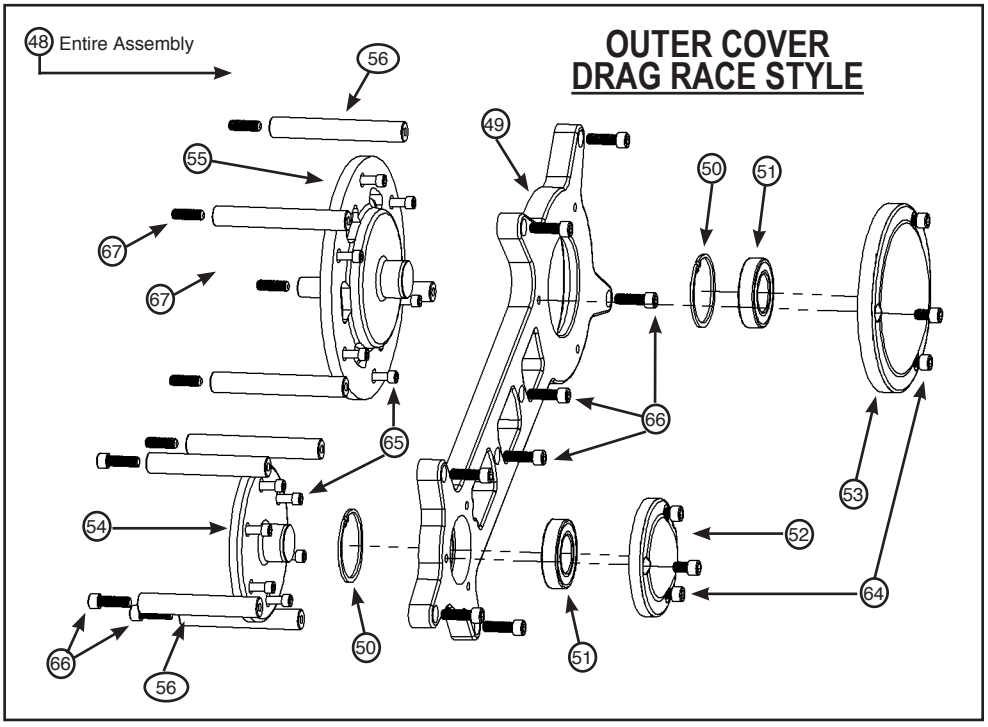

46. **58-781** NUT 0.4375-20-D-S
47. **58-782** FW 0.4375
48. **58-917** Outboard Support Kit, must be used w/motor plate **58-935** or **58-940**
48A **58-650** BLACK Outboard Support Kit, must be used w/ motor plate **58-935** or **58-940**
49. **58-916** Cover, Outer, must be used w/motor plate **58-935** or **58-940**
49A **58-651** BLACK Cover, Outer, must be used w/motor plate **58-935** or **58-940**
50. **58-786** Retaining Ring
51. **58-787** Bearing, Radial Ball, Single Row
52. **58-812** Cap One, Outer Cover
52A **58-652** BLACK Cap One, Outer Cover
53. **58-813** Cap Two, Outer Cover
53A **58-653** BLACK Cap Two, Outer Cover
54. **58-815** Cap, Motor Pulley - w/ Outboard Support
54A **58-655** BLACK Cap, Motor Pulley - w/ Outboard Support
55. **58-814** Cap, Trans Pulley - w/ Outboard Support
55A **58-654** BLACK Cap, Trans Pulley - w/ Outboard Support
56. **58-793** Spacers, Outer Cover; (5)4.360", (3)3.920"
56A **58-656** BLACK Spacers, Outer Cover; (5)4.360", (3)3.920"
57. **58-903** Belt, Ultima / Goodyear 3.35" 8mm 140T, must be used w/Motor plate **58-935** or **58-940**
58. **58-767** Motor Pulley Cap, w/o Outboard support
58A **58-950** BLACK Motor Pulley Cap, w/o Outboard support
59. **58-765** Transmission Pulley Cap, w/o Outboard support
59A **58-951** BLACK Trans Pulley Cap, w/o Outboard support
60. **58-797** SHCS 0.3125-18x1.5x1.5-S (4)
61. **58-799** SHCS 0.3125-18x2.25x1.125-S (4)
62. **58-798** SHCS 0.3125-18x0.875x0.875-S (2)
63. **58-774** SCHCSCREW 0.164-32x0.625x0.625-HX-S (6)
64. **58-790** SHCS 0.3125-18x.5x.5-S (6)
65. **58-736** SHCS 0.25-20x0.625x0.625-S (12)
66. **58-794** SHCS 0.3125-18x1x1-S (11)
67. **58-795** SSFLATSKT 0.3125-18x1-HX-S (5)
68. **58-796** SHCS 0.3125-18x0.75x0.75-S (6)
69. **58-775** Clutch Spring Stud (6)
70. **58-718** Starter Bolt .25-20x2.75 (1) ('90'-'93' Starter OEM / Thunderfire)
71. **58-719** Starter Bolt 10-32x2.75 (1) ('94' & later Starter OEM)
72. **58-922** Outer Pulley 71T w/inserts, 3.35"
73. **58-924** Pulley Inserts only, 3.35"

ULTIMA® EVO & TWIN CAM® DYNA® PRIMARY BELT DRIVES

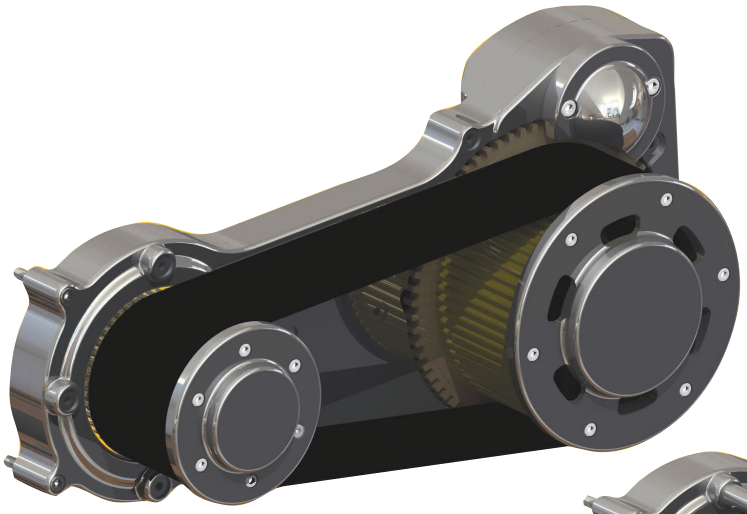

3.35" DYNA STREET STYLE



3.35" DYNA DRAG STYLE

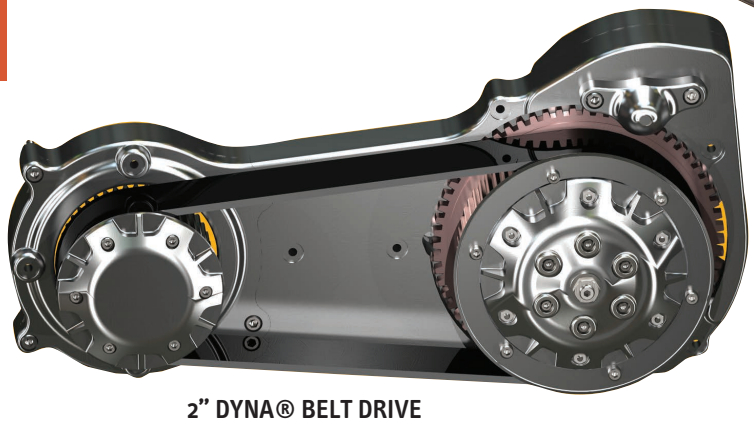

2" DYNA® BELT DRIVE

Ultima Dyna® Beltdrive Kits fit both Evo and TwinCam 1990-2006 Dynas with no modifications needed. Looks have been revised with a smoother outline. The aluminum backing plate is billet 6061-T6. This will give your bike the unique look of an open beltdrive. The option for an outboard support is also available. Please check out the new list of outboard supports that are now offered for these models. *Instructions included and available online @ www.ultimaproducts.com.

2" DYNA® BELT DRIVE

58-900 2" Belt Drive Assembly

3.35" DYNA® BELT DRIVE

58-902 3.35" Belt Drive Assembly, Street Style
58-904 3.35" Belt Drive Assembly, Drag Style

REPLACEMENT BELTS

58-901 2" Belt, Goodyear 140T
58-920 2" Belt, Goodyear 140T, -.015 length
58-903 3.35" Belt, Goodyear 140t
58-921 3.35" Belt, Goodyear 140t, -.015 length

ULTIMA® EVO & TWIN CAM® DYNA® BELT DRIVE - 2”

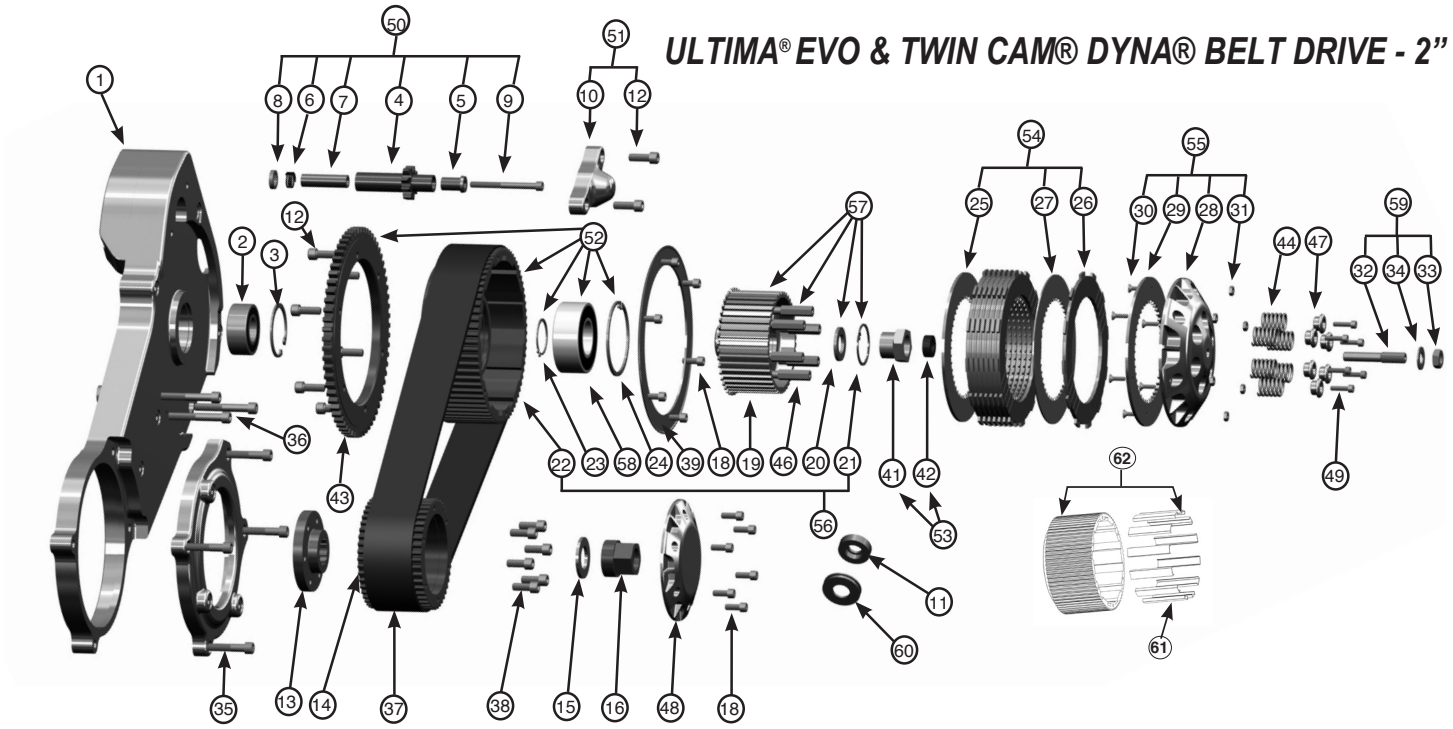

ITEM #	QTY	PART #	COMPONENT
1	1	**58-928**	Motor Plate, Billet
2	1	**58-707**	Bearing, Ball, Double Row Angular Contact, INA 3200 Series
3	1	**58-708**	N5000-206 Snap Ring
4	1	**58-710**	Gear, Starter Drive, One Piece
5	1	**58-711**	Starter Bushing
6	1	**58-712**	Starter Spring
7	1	**58-713**	Starter Spacer
8	1	**58-714**	Spring Stop
9	1	**58-718**	Starter Bolt 89’-93’, 1/4-20 x 2-3/4 (supplied)
	1	***58-719**	Starter Bolt 94’-06’, 10-32 x 2-3/4 (available)
10	1	—	Cover, Starter Gear
11	1	**58-930**	Counterbored Spacer, swingarm
12	2	**58-798**	HX-SHCS 0.3125-18 x 0.875
13	1	**58-605**	Collar, Sprocket Shaft, no offset
		***58-606**	1/4” Offset Collar, Sprocket Shaft
		***58-607**	1/2” Offset Collar, Sprocket Shaft
		***58-608**	3/4” Offset Collar, Sprocket Shaft
		***58-609**	1” Offset Collar, Sprocket Shaft
		***58-610**	1-1/4” Offset Collar, Sprocket Shaft
		***58-611**	1-1/2” Offset Collar, Sprocket Shaft
		***58-612**	1-3/4” Offset Collar, Sprocket Shaft
		***58-613**	2” Offset Collar, Sprocket Shaft
14	1	**58-824**	Pulley, Motor 45T 2” Drive
15	1	**58-726**	Washer, 1.655 x 0.94 x 0.125
16	1	**58-723**	HTNUT 0.8750-14
		***58-724**	Nut, Motor Pulley long (for 1-1/2-1-3/4” offset collar)
18	12	**58-736**	HX-SHCS 0.25-20 x 0.625
19	1	**58-828**	Clutch Hub
20	1	**58-756**	Washer, Clutch Hub
21	1	**58-757**	N5000-137 Snap Ring
22	1	**58-826**	Pulley, Transmission 71T
23	1	**58-739**	Retaining Ring, Clutch Assy Inner
24	1	**58-738**	Retaining Ring, Clutch assy Outer
25	1	—	Clutch Drive Plate, Lower 0.119
26	8	—	Clutch Plate, Friction
27	7	—	Clutch Plate, Steel 0.049
28	1	**58-832**	Pressure Plate

ITEM #	QTY	PART #	COMPONENT
29	1	**58-772**	Clutch Drive Plate, Upper
30	6	**58-774**	SHCS 0.164-32 x 0.625
31	6	**58-773**	MSHXNUT 0.164-32
32	1	**58-780**	SSFLATSKT 0.4375-20 x 1
33	1	**58-781**	HJNUT 0.4375-20
34	1	**58-782**	FW 0.4375
35	4	**58-919**	HX-SHCS 0.3125-18x1.75
36	3	**58-926**	HX-SHCS 0.3125-18x2.125
37	1	**58-901**	Belt, GoodYear 2” 8mm 140t
38	6	**58-796**	HX-SHCS 0.3125-18 x 0.75
39	1	**58-761**	Belt Guide, Ultima 2” Trans Pulley
41	1	**58-741**	HTNUT 0.75-16
42	1	**95-778**	Clutch Rod Seal
43	1	**58-735**	Gear, Starter Ring
44	6	**96-251**	Spring, Clutch - Medium, Gold (68lb @ 1”)
	6	**96-249**	Spring, Clutch - Heavy Duty, Black (82lb @ 1”)
	6	**96-250**	Spring, Clutch - Extra Heavy Duty, Red (98lb @ 1”)
46	6	**58-833**	Clutch Spring Stud
47	6	**58-852**	Clutch Spring Guide
48	1	**58-867**	Motor Pulley Cap
49	6	**58-835**	SHCS #12-24 x 1.000
50	1	**58-633**	Gear Assembly, Starter Drive
	1	**58-634**	Upgrade: Gear Assembly, Starter drive
51	1	**58-720**	Cover Assembly, Starter Gear
56	1	**58-834**	Main Trans Pulley Assembly
52	1	**58-825**	Transmission Pulley Sub-Assembly 71T
		58-923	Transmission Pulley, bare, w/stainless inserts 71T
		58-925	Stainless inserts for 2” pulley. Pkg.
53	1	**58-622**	Clutch Retaining Nut Assy
54	1	**58-769**	Complete Replacement Clutch Assy
55	1	**58-829**	Pressure Plate Assembly
57	1	**58-827**	Clutch Hub Assembly
58	1	**58-737**	Bearing, Ball, Double Row Angular Contact, INA 3200 Series
59	1	**58-779**	Clutch Adjuster Assy
60	1	**58-929**	Grooved Spacer, swingarm
61	1	**58-925**	Pulley Inserts only, 2”
62	1	**58-923**	Outer Pulley 71T w/inserts, 2”

ULTIMA® EVO & TWIN CAM® DYNA® BELT DRIVE - 3.35”

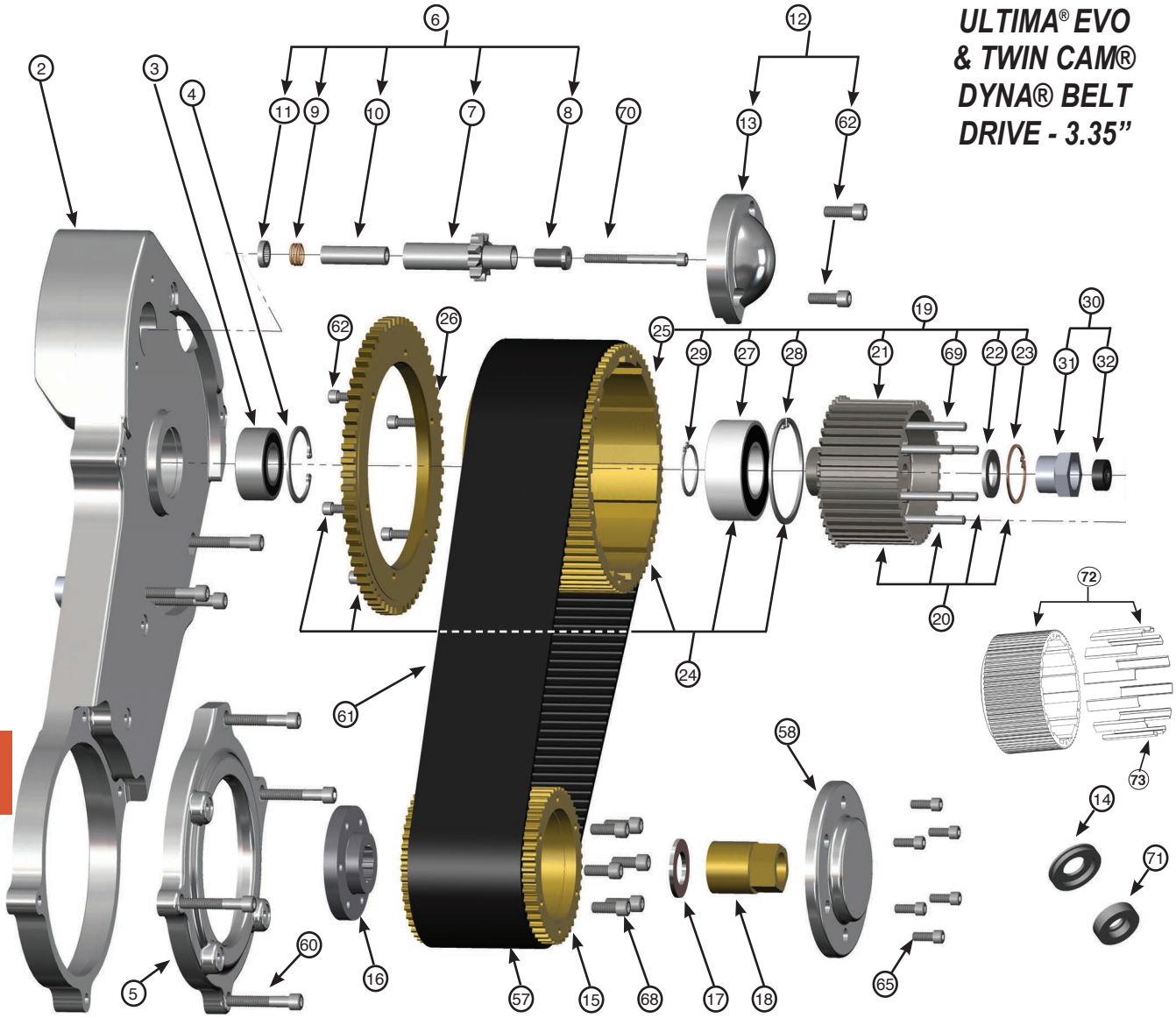

***DENOTES OPTIONAL PARTS NOT INCLUDED IN THIS KIT**

1. Complete Assembly
2. 58-928 Motor Plate Assy. - Billet, includes #3 & #4
3. 58-707 Bearing, Ball, Double Row Angular Contact,
4. 58-708 Snap Ring
5. 58-927 Pulley
6. 58-633 Gear Assembly, Starter drive
   58-634 Upgrade: Gear Assembly, Starter drive
7. 58-710 Gear, Start Drive, One piece
8. 58-711 Starter Gear Bushing
9. 58-712 Starter Spring
10. 58-713 Starter Gear Spacer
11. 58-714 Spring Stop
12. 58-715 Cover Assembly, Starter Gear
13. — Cover, Starter Gear
14. 58-929 Spacer, grooved for swingarm
15. 58-725 Pulley, Motor 45T
16. 58-605 0” Offset Collar, Sprocket Shaft
    *58-606 1/4” Offset Collar, Sprocket Shaft
    *58-607 1/2” Offset Collar, Sprocket Shaft
    *58-608 3/4” Offset Collar, Sprocket Shaft
    *58-609 1” Offset Collar, Sprocket Shaft
    *58-610 1-1/4” Offset Collar, Sprocket Shaft
    *58-611 1-1/2” Offset Collar, Sprocket Shaft
    *58-612 1-3/4” Offset Collar, Sprocket Shaft
    *58-613 2” Offset Collar, Sprocket Shaft
17. 58-726 Washer, 1.655 x .94 x .125
18. 58-727 Nut, Motor Pulley
    *58-724 Nut, Motor Pulley long (for 1-1/2-1-3/4” offset collar)
19. 58-728 Complete Trans Pulley Assembly Includes 62, 26, 29, 24, 20.
    58-922 Transmission Pulley, bare, w/stainless inserts 71T
    58-924 Stainless inserts for 2” pulley. Pkg.
20. 58-729 Clutch Hub Assembly
21. 58-755 Clutch Hub
22. 58-756 Washer, Clutch Hub
23. 58-757 Snap Ring
24. 58-733 Trans Pulley Assy 71T w/BRG (Includes 62, 26, 27, 28)
25. — Pulley, Trans 71T Bare
26. 58-735 Gear, Starter Ring
27. 58-737 Bearing, Ball, Double Row Angular Contact
28. 58-738 Retaining Ring, Clutch Assy Outer
29. 58-739 Retaining Ring, Clutch Assy inner
30. 58-622 Clutch Retaining Nut Assy
31. 58-741 Clutch Retaining Nut
32. 95-778 Clutch Rod Seal
33. 58-760 Complete Replacement Clutch Assy, 9 friction, 9 steel plates
34. — Clutch Drive Plate, Inner . 119 Thick
35. — Clutch Plate, Friction
36. — Clutch Plate, Steel .049 Thick
37. 58-770 Pressure Plate Assembly
38. 58-771 Pressure Plate
39. 58-772 Clutch Drive Plate, Outer
40. 58-773 Nut .164-32 (6)
41. 58-776 Clutch Spring - Medium, Gold (68lb @ 1”)
    *96-252 Clutch Spring - Heavy Duty, Black (82lb @ 1”)
    *96-253 Clutch Spring - Extra Heavy Duty, Red (105lb @ 1”)
42. 58-777 Clutch Spring Guide
43. 58-778 Ny-Loc nut 1/4 - 28
44. 58-779 Clutch Adjuster Assy.
45. 58-780 Clutch Adjuster 0.4375-20x1
46. 58-781 NUT 0.4375-20
47. 58-782 FW 0.4375
48. 58-917 Outboard Support Kit

ULTIMA® EVO & TWIN CAM® DYNA® BELT DRIVE - 3.35”

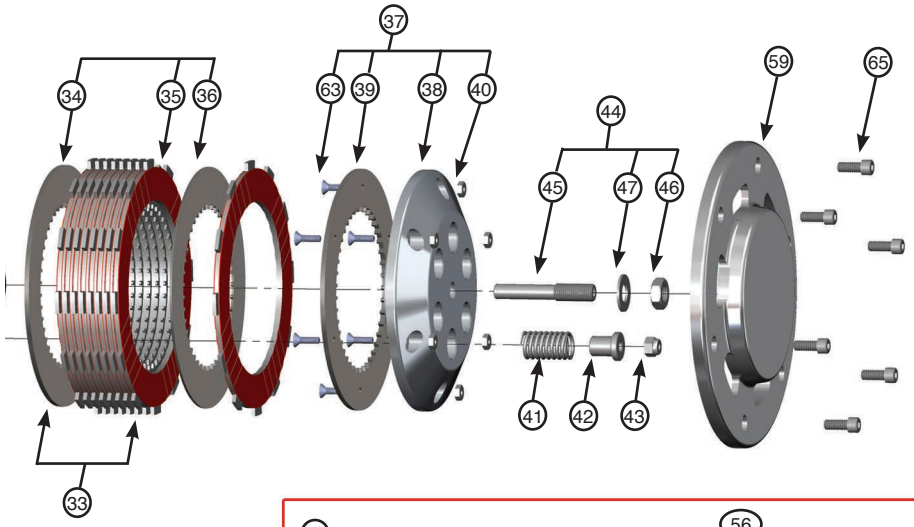

OUTER COVER
DRAG RACE STYLE

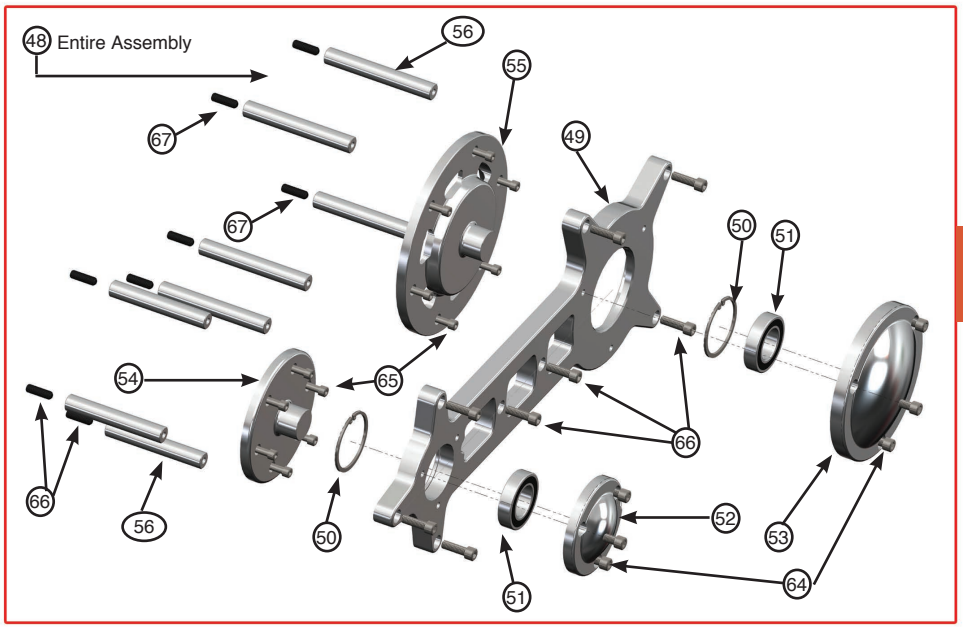

7

49. 58-916 Cover, Outer
50. 58-786 Retaining Ring
51. 58-787 Bearing, Radial Ball, Single Row
52. 58-812 Cap One, Outer Cover
53. 58-813 Cap Two, Outer Cover
54. 58-815 Cap, Motor Pulley - w/ Outboard Support
55. 58-814 Cap, Trans Pulley - w/ Outboard Support
56. 58-793 Spacers, Outer Cover; (5)4.360”, (3)3.920”
57. 58-903 Belt, Ultima / Goodyear 3.35” 8mm 140T
58. 58-767 Motor Pulley Cap, w/o Outboard support
59. 58-765 Transmission Pulley Cap, w/o Outboard support
60. 58-919 HX-SHCS 0.3125-18x1.75 (4)
61. 58-926 Belt
62. 58-798 HX-SHCS 0.3125-18x0.875 (2)
63. 58-774 SCHCSCREW 0.164-32x0.625(6)
64. 58-790 HX-SHCS 0.3125-18x.5 (6)
65. 58-736 HX-SHCS 0.25-20x0.625 (12)
66. 58-794 HX-SHCS 0.3125-18x1 (8)
67. 58-795 SSFLATSKT 0.3125-18x1(8)
68. 58-796 HX-SHCS 0.3125-18x0.75 (6)
69. 58-775 Clutch Spring Stud (6)
70. 58-718 Starter Bolt .25-20x2.75 (1) (89’-93’ **supplied**)
*58-719 Starter Bolt .10-32x2.75 (1) (94’-06’ **available for purchase**)
71. 58-930 Spacer, counterbored for swingarm
72. 58-922 Outer Pulley 71T w/inserts, 3.35”
73. 58-924 Pulley Inserts only, 3.35”

ULTIMA® EVO & TWIN CAM® DYNA® & SOFTAIL® PRIMARY OUTBOARD BEARING SUPPORTS





OUTBOARD SUPPORTS FOR DYNA® & SOFTAIL® BELT DRIVES

Fits Dyna® Beltdrives and the revised Softail® Beltdrives using the **58-935** & **58-940** motor plates. Will not fit the older Ultima Softail® Beltdrives due to a difference in center to center distance.

All Outboard supports are CNC machined from billet aluminum and polished. Outboard option offers rigid support for pulleys as well as extra protection from the exposed moving belt. This is an obvious choice for those who prefer monsterous motors like the Ultima El Bruto series!

58-906 Outboard Plate only
58-907 Outboard Kit- (Kit is needed for Street Style upgrade and includes pulley covers, spacers, bolts, bearings, and bearing covers.)

58-908 Outboard Plate only
58-909 Outboard Kit- (Kit is needed for Street Style upgrade and includes pulley covers, spacers, bolts, bearings, and bearing covers.)

ULTIMA® 3.35" BELT DRIVE COVERS/GUARDS





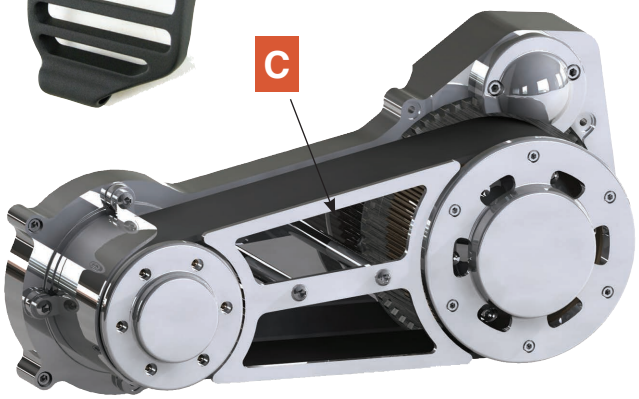

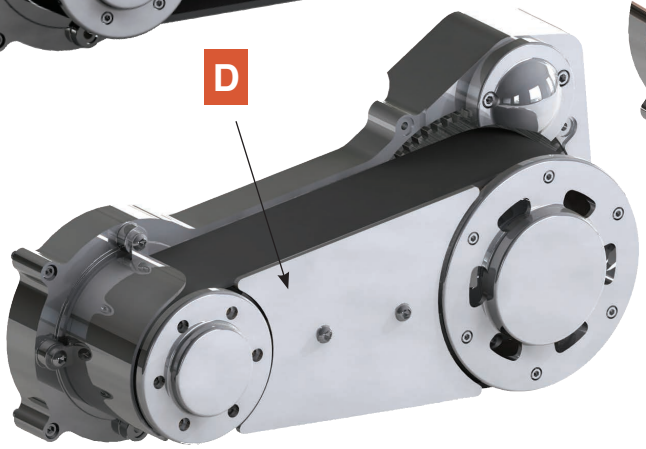

Designed to compliment the look of our industry proven 3.35" Ultima Belt Drives, our Ultima pulley covers and belt guards can be used individually or can be combined to create "the look" you are seeking. All covers and guards come in a polished finish.

A. **58-871** 3" Quarter Grill pulley cover, Polished
B. **58-936** 3" Quarter Grill pulley cover, Black
C. **58-873** 3" Trim cut, belt guard
D. **58-876** 3" Smooth belt guard

ULTIMA® 2" BELT DRIVE COVERS/GUARDS

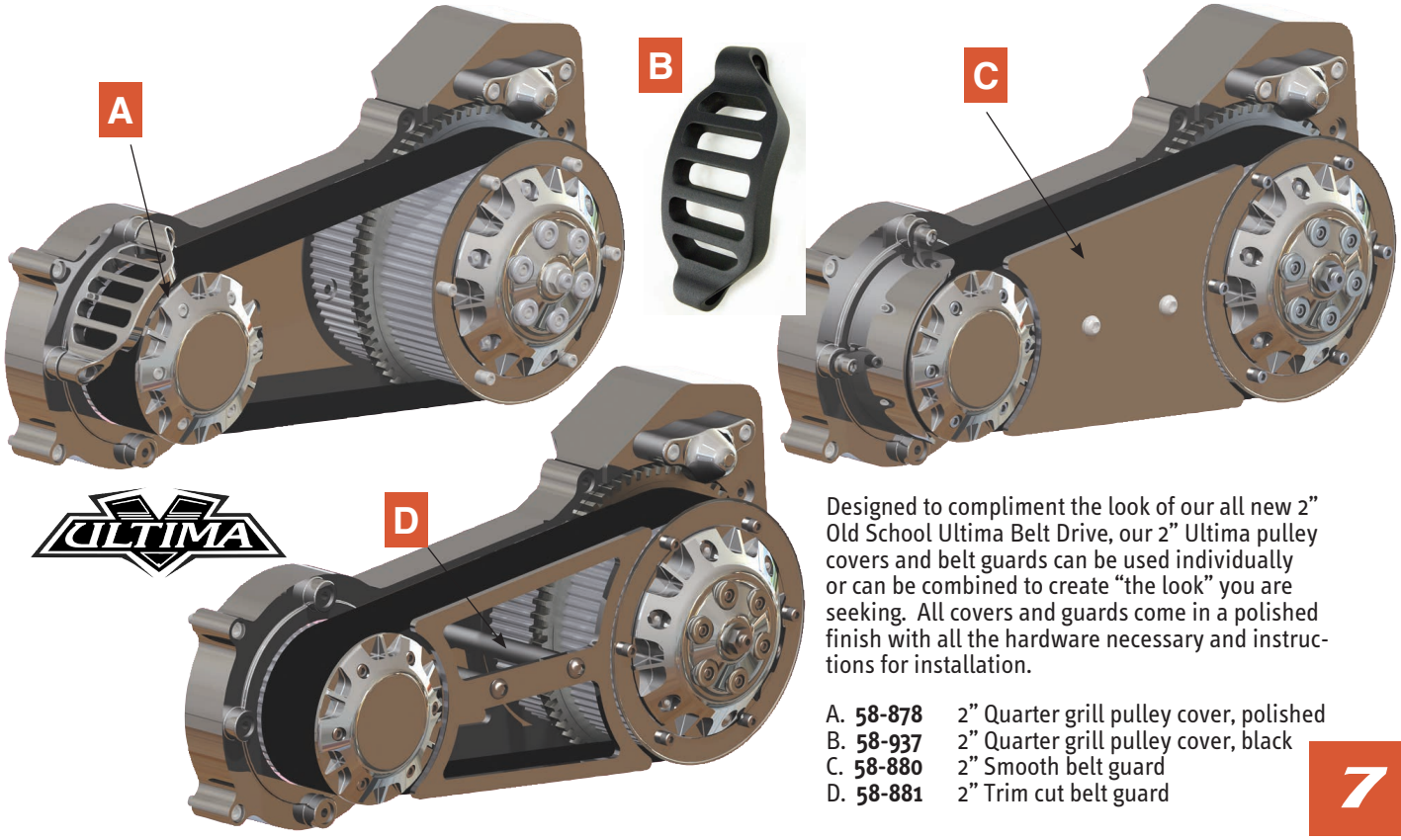

Designed to compliment the look of our all new 2" Old School Ultima Belt Drive, our 2" Ultima pulley covers and belt guards can be used individually or can be combined to create "the look" you are seeking. All covers and guards come in a polished finish with all the hardware necessary and instructions for installation.

A. **58-878** 2" Quarter grill pulley cover, polished
B. **58-937** 2" Quarter grill pulley cover, black
C. **58-880** 2" Smooth belt guard
D. **58-881** 2" Trim cut belt guard

7

BELT DRIVE UPGRADE JACK SHAFT ASSEMBLY FOR ULTIMA® & BDL® 3" OPEN PRIMARY FOR '89-'93 BIG TWIN



Jack shaft assembly for all Ultima® & BDL® belt drives using a 9 tooth gear. The spring on the pinion gear forces the gears to engage, stopping gear grind. For '89-'93 Big Twin.

58-634 2 Piece Jackshaft, 9 tooth pinion gear, jackshaft bolt, coupler & assorted spacers for proper fit.

REPLACEMENT FRONT PULLEY & INSERT FOR BDL 3" ELECTRIC START

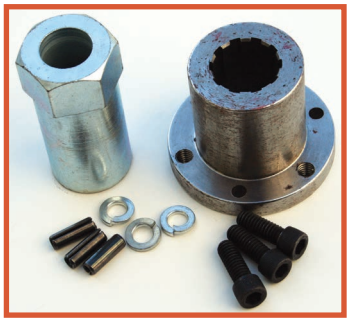

58-538 1-3/4" Insert and special nut with screws. For 3" std pulleys.

REPLACEMENT PRIMARY BELTS

MW BELT PART NO.	PITCH	BELT I.D. NO.	NO. OF TEETH	WIDTH	LENGTH	NUMBER OF TEETH ON PULLEYS FRONT	REAR	KARATA	PRIMO
58-304	8mm	BDL-132-3	132	3"		48	72	—	—

BELT SOLD EACH

REPLACEMENT BELT FITMENT CHART

1-1/2" WIDE BELTS

125 tooth	Special application
126 tooth	Fits 80-86 FXB, FXSB, FXWG: 82-84 FL (HD# 40003-79)
127 tooth	Special application also (International 89-92 Softail® HD# 40010-89)
128 tooth	Softail® 93-99 with 61T rear pulley (HD# 40012-90)
	Fits International 93-94 Softail® and 91-93 Dyna® models
130 tooth	Fits 95-99 Softail® with 65 T rear pulley (HD# 40017-94)
132 tooth	Fits 86-04 Softail® with 70 T rear pulley (HD# 40023-86)
	Fits International 89-93 FLT, FXR
133 tooth	Fits 91-99 Dyna® (HD# 40015-90)
135 tooth	Fits 85-96 FLT, FXR (For shorter fit than stock)
136 tooth	Fits 85-96 FXR, FLT (HD# 40001-85)
139 tooth	Fits 97-03 FLT (HD# 40024-97)

1-1/8" WIDE BELTS

125 tooth	Fits 91-03 Sportster® with 55 T pulley (HD# 40038-91)
128 tooth	Fits 91-03 Sportster® with 61 T pulley (HD# 40022-91)
132 tooth	Fits 06-up Dyna® (International with 34-68 ratio)
133 tooth	Fits 2000-up Dyna® w/ 70 tooth pulley
135 tooth	Fits 2000-up domestic and international Softail® w/ 70 tooth pulley
137 tooth	Fits 2004-06 XL-883/883C
139 tooth	Fits 2004-06 FLT

All other sizes in 1-1/8" width are for custom applications, fitment of tooth size
Is the same as all of the above.

1-3/8" WIDE BELTS

149 tooth	Fits 04-up VRSCA/B V-Rod
150 tooth	Fits 02-03 VRSCA/B V-Rod and (02-up International VRSCA/B V-Rod)

1" wide belts

133 tooth	Fits 2007 FXSTD,FLSTC, FLSTSC, FLSTN
137 tooth	Fits 2007-08 FLT 32-66 ratio
140 tooth	Fits 2009-11 Touring with 34-68 ratio

All other sizes are for custom applications only

20MM WIDE BELTS

132 tooth	Fits all 2007-09 Softail® with 32/64 drive ratio
133 tooth	Fits 2007-09 FXST,FXSTB, FXSTC, FLSTF
135 tooth	Fits 2006 Softail® FXST/I/B/BI/S/SI Models

A

CHROME PLATED



A. ENGINE SPROCKET SHAFT NUT

The last word in functional beauty. Available for the Sportster® and the 74". Massive yet graceful, the acorn engine nut keeps the front pulley snug. SOLD EACH

58-110 For 74" 1955 thru 1981.
58-111 For Sportster® 1957 thru 1979.

B. SHIELD BEARING FOR TRANSMISSION SHAFT SUPPORT

Replaces bearing support cast on rear aluminum primary. Use with bearing part No. **95-228**.

95-228 Shielded bearing.

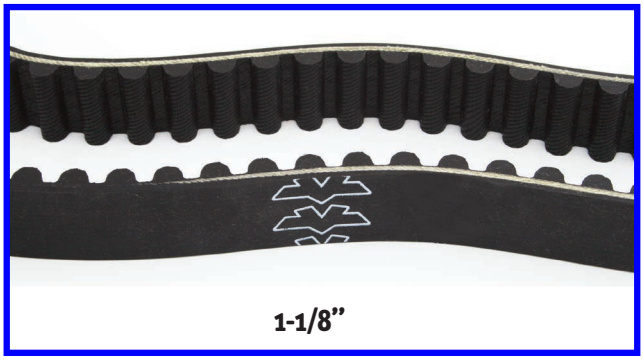

1-1/8”

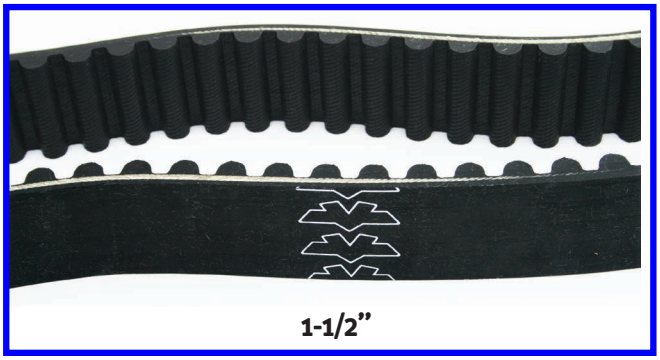

1-1/2”

ULTIMA® FINAL DRIVE BELTS

REPLACES OEM NO.	NO. OF TEETH	14MM ULTIMA® PART NO.	APPLICATION / NOTE
40003-79	126	58-410	1-1/2” 85’ - 86’ FX
	126	58-419	1-1/8” FOR CUSTOM SHOW ONLY.
40012-90	128	58-411	1-1/2” 93’ FLST
40022-91	128	58-420	1-1/8” For Sportster®.
40017-94	130	58-416	1-1/2” For 95’-99’ FLST
40048-07	130	58-421	1-1/8”
40023-86.	132	58-417	1-1/2” For 86’-92’, 94’ FLST
40594-06	132	58-430	1-1/8”
40015-90	133	58-418	1-1/2” For 91’-99’ FXD, FXWG
40015-00	133	58-433	1-1/8” For 00’-06’ FXD/FXDWG
	135	58-412	1-1/2” FOR CUSTOM SHOW ONLY.
40307-00	135	58-437	1-1/8” For 00’-06’ FLST, 00’-05’ FXST
40001-85	136	58-413	1-1/2” For 85’-96’ FLT, FLHT, 85’-94’ FXR
40570-04	136	58-415	1-1/8” For 04’-06’ XL 883
40024-97	139	58-414	1-1/2” For 97-03 FLT, FLHT, FLHR, FLTR
40024-04	139	58-439	1-1/8” For 04’-06’ FLHT, FLHR, FLTR

PRIMARY CHAIN COVER & PARTS FOR SPORTSTER®

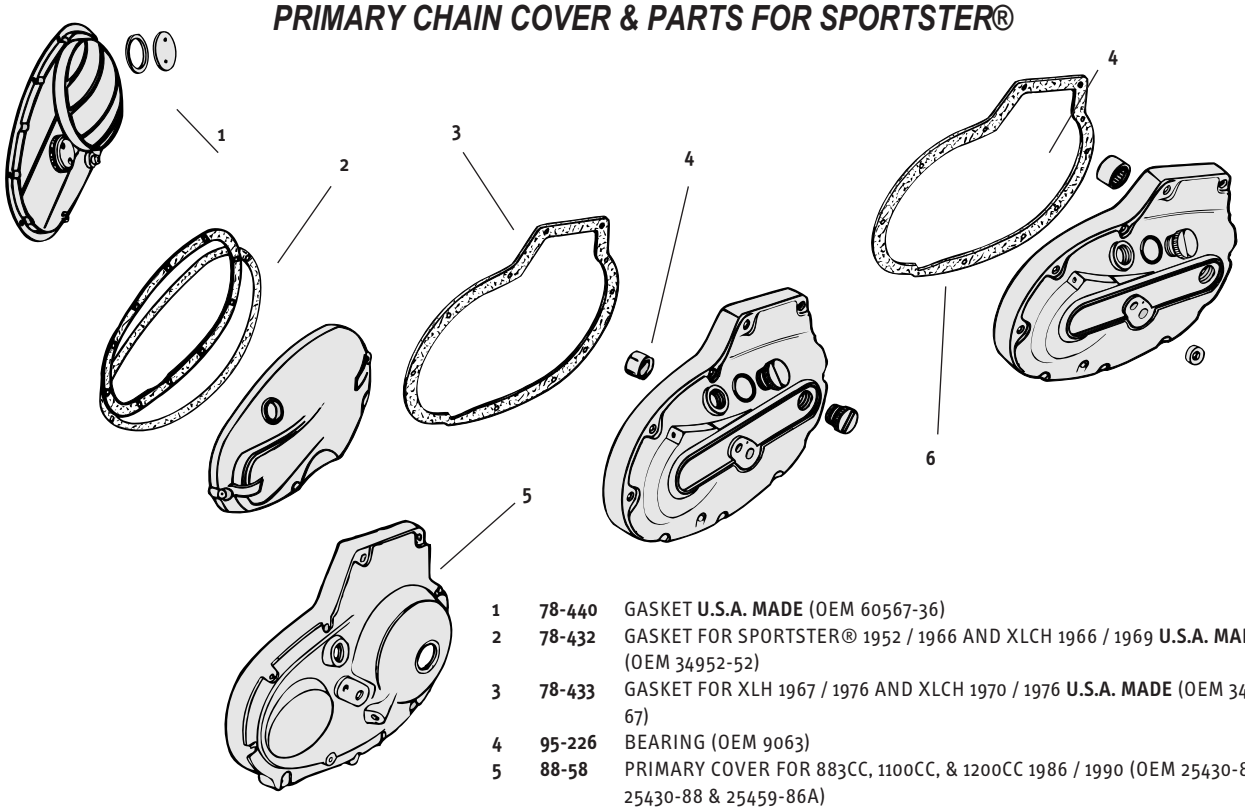

1	**78-440**	GASKET **U.S.A. MADE** (OEM 60567-36)
2	**78-432**	GASKET FOR SPORTSTER® 1952 / 1966 AND XLCH 1966 / 1969 **U.S.A. MADE** (OEM 34952-52)
3	**78-433**	GASKET FOR XLH 1967 / 1976 AND XLCH 1970 / 1976 **U.S.A. MADE** (OEM 34955-67)
4	**95-226**	BEARING (OEM 9063)
5	**88-58**	PRIMARY COVER FOR 883CC, 1100CC, & 1200CC 1986 / 1990 (OEM 25430-86A, 25430-88 & 25459-86A)
6	**78-434**	GASKET FOR 1986/1990 **U.S.A. MADE** (OEM 34955-75)
	78-435	GASKET FOR 1991 & LATER **U.S.A. MADE** (OEM 34955-89)

7

PRIMARY DRIVE PARTS FOR BIG TWIN — FLT, CLASSIC & FXR 1979 & LATER

ALLEN & ACORN SCREWS FOR THESE COVERS ARE AVAILABLE IN SECTION 14

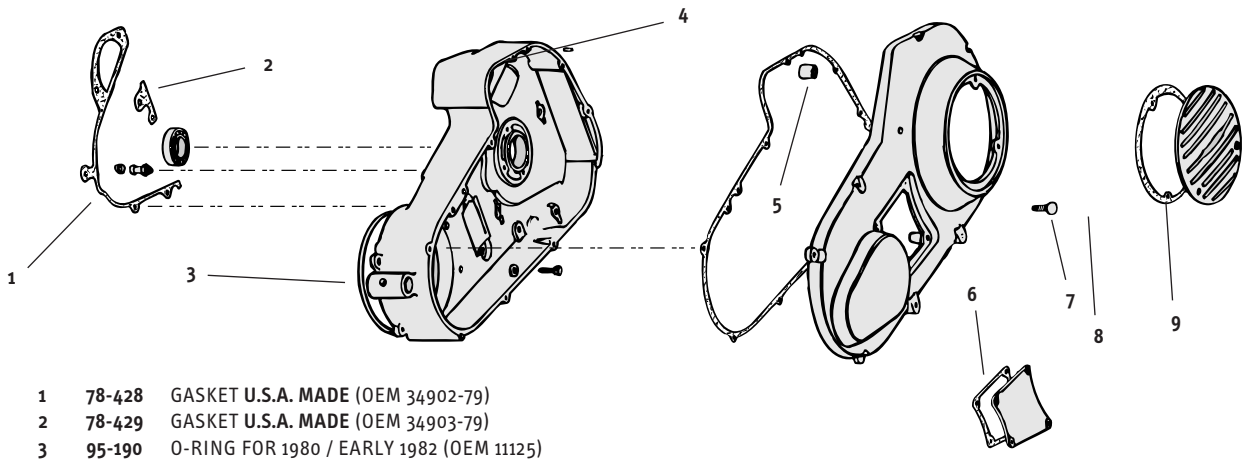

1	**78-428**	GASKET **U.S.A. MADE** (OEM 34902-79)
2	**78-429**	GASKET **U.S.A. MADE** (OEM 34903-79)
3	**95-190**	O-RING FOR 1980 / EARLY 1982 (OEM 11125)
	95-714	O-RING LATE FOR 1982 / 1993 **U.S.A. MADE** (OEM 11147)
4	**95-807**	INNER PRIMARY STARTER BUSHING FOR ALL MODELS 1989 / 1993 (OEM 33445-89
	95-806	INNER PRIMARY STARTER BUSHING FOR ALL MODELS 1994 & LATER (OEM 33445-94A)
5	**95-226**	OUTER PRIMARY STARTER BEARING FOR ALL MODELS 1965 / 1988 (OEM 9063)
	95-800	OUTER PRIMARY STARTER BUSHING FOR ALL MODELS 1989 / 1993 (OEM 33446-89)
	95-808	OUTER PRIMARY STARTER BUSHING FOR ALL MODELS 1994 & LATER (OEM 33446-94A)
6	**78-430**	GASKET FOR 1979 / 1982 (OEM 34906-79)
7	**41-166**	MAGNETIC 1/4 - 18 PLUG FOR 1980 / 1984 (OEM 718)
8	**78-383**	GASKET **U.S.A. MADE** (OEM 25416-70) SOLD AS PKG 5
	95-751	O-RING FOR LATE 1984 THRU 1998 (OEM 25416-70) SOLD AS PKG OF TEN
	95-738	SEAL FOR 1989 THRU 1993
	95-794	SEAL FOR 1994 & LATER
9	**95-751**	O-RING DERBY (OEM 25416-84) SOLD AS PKG OF 10

INNER PRIMARY LOCKING TAB



96-801 **Fits all models Big Twin 1985 & later. Six used.**

SOLD EACH

PRIMARY DRIVE PARTS FOR BIG TWIN *1936 THRU 1964 ALL MODELS*

ALLEN & ACORN SCREWS FOR THESE COVERS ARE AVAILABLE IN SECTION 14

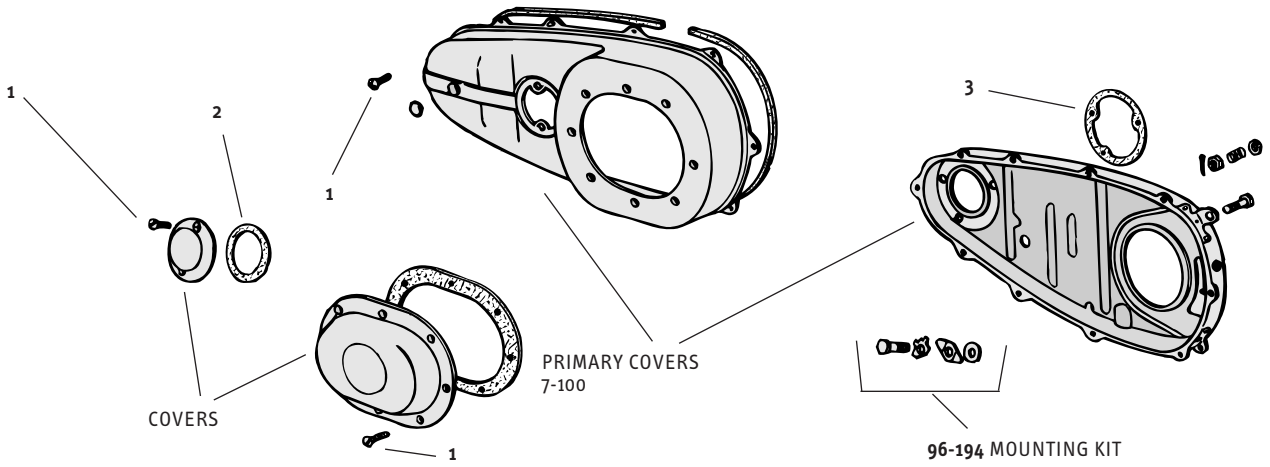

1	**96-192**	SCREW. CHROME (OEM 1211)
2	**78-440**	GASKET **U.S.A. MADE** (OEM 60567-36) SOLD AS PKG 5
3	**78-442**	GASKET 1955 / 1964 **U.S.A. MADE** (OEM 60629-55) SOLD AS PKG 10

PRIMARY DRIVE PARTS FOR BIG TWIN *1965 & LATER ALL MODELS*

ALLEN & ACORN SCREWS FOR THESE COVERS ARE AVAILABLE IN SECTION 14

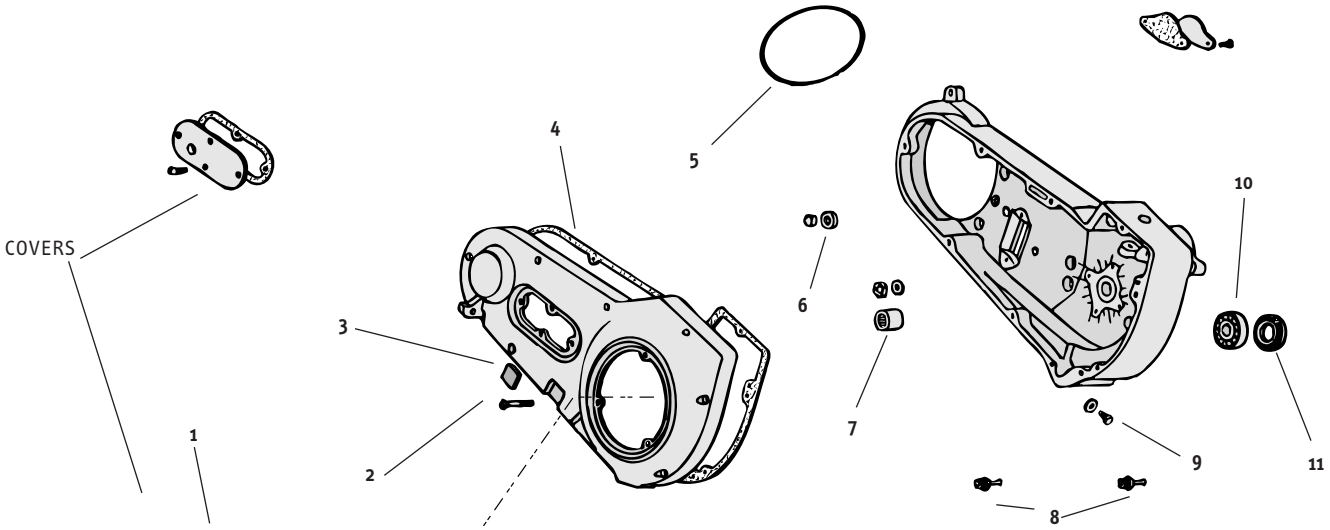

1	**78-383**	GASKET (OEM 25416-70)
	95-751	O-RING FOR GASKET LATE 1984 THRU 1998 (OEM 25416-70) SOLD AS PKG 10
2	**41-333**	ALLEN SCREWS FOR 1970 & LATER (OEM 1301) SOLD AS SET CHROME. GARDNER WESCOTT
3	--------	BUMPER (OEM 50100-70)
4	**78-438**	GASKET FOR 1965 / 1980. THIN, .032", 9 HOLE (OEM 60540-65A) SOLD AS PKG 5
	78-437	GASKET FOR FXST & DYNA® 1989 & LATER (OEM 60539-89) SOLD AS PKG 5
5	**95-190**	O-RING FOR 1970 / EARLY 1982 (OEM 11125)
	95-714	O-RING FOR LATE 1982 / 1999 **U.S.A. MADE** (OEM 11147) SOLD AS PKG 10
	95-714A	O-RING FOR LATE 1982 / 1999 **U.S.A. MADE** (OEM 11147) SOLD EACH
6	**95-238**	OIL SEAL FOR SUPER GLIDE® 1974 & LATER (OEM 60641-74)
7	**95-226**	STARTER SHAFT BEARING (OEM 9063)
	95-800	STARTER BUSHING FOR 1989 & LATER (OEM 33446-89)
8	**21-123**	VENT HOSE FITTING (OEM 63533-41)
9	**41-165**	1/2-20 MAGNETIC DRAIN PLUG FOR 1965 / 1984 (OEM 60348-65A, B)
10	**95-227**	NON-SHIELDED 4 SPEED BEARING (OEM 9040)
	95-228	SHIELDED 4 SPEED BEARING
11	**95-223**	OIL SEAL (OEM 12018)
	96-801	LOCKS

INNER PRIMARY PARTS FOR ALL BIG TWIN 1989 THRU 1999

ALL PARTS SOLD EACH EXCEPT AS NOTED

1	—	Inner primary.
2	95-452	Retaining ring.
3	95-450	Bearing. (OEM 9135)
4	—	Inner primary dowel pin.
5	95-738	Starter shaft seal, 1989-1993
	95-794	Starter shaft seal, 1994-later
6	95-807	Starter bushing for all models 1989 / 1993. (OEM 33445-89)
	95-806	Starter bushing for all models 1994 & later. (OEM 33445-94A)
7	95-737	Inner primary oil seal.
8	5-137	Anchor plate. (OEM 39998-65)
9	—	Flat head screw.
10	—	Flat washer.

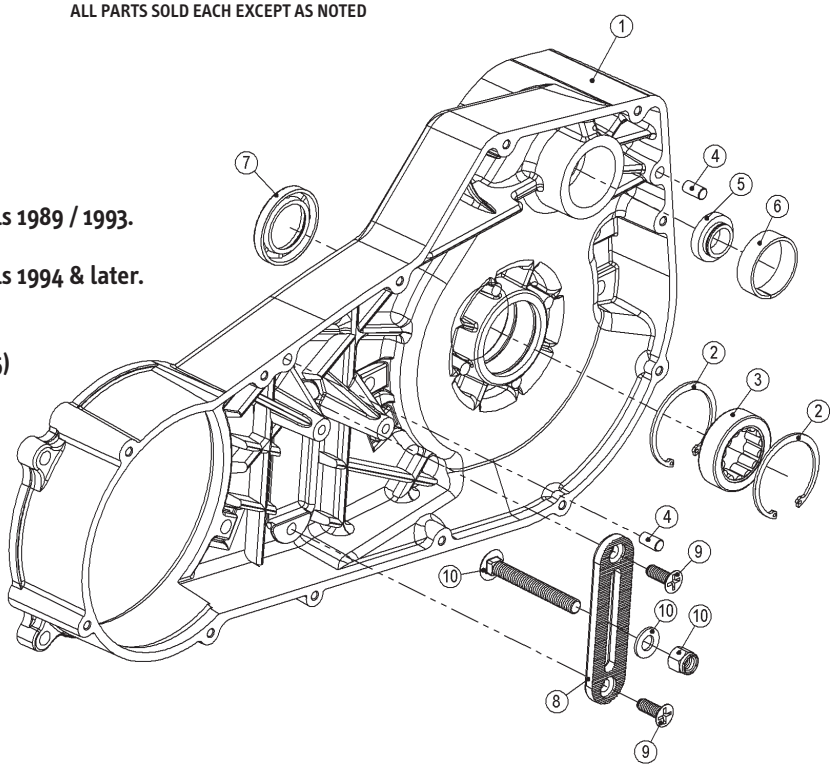

7

A. *TWIN CAM '06-'17 G5 BOLT & SEAL KIT FOR INNER PRIMARY*

77-940 Inner primary TwinCam G5 bolt & seal kit #786A. Pack of 5
Fits 2006-2017 TwinCam models.

NEW!

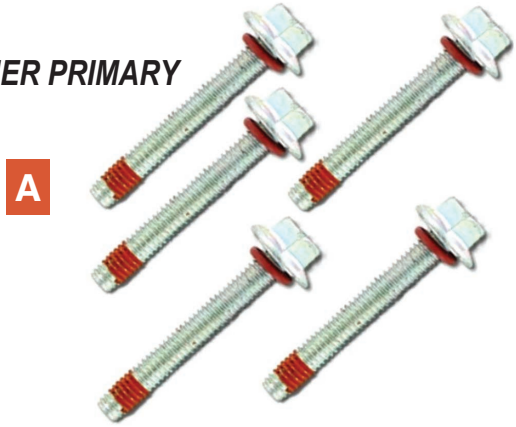

B. *TWIN CAM '06-'17 GASKET SEAL FOR INNER PRIMARY TO ENGINE INTERFACE*

77-941 Inner primary to Engine interface gasket seal,
OEM 25700455. Fits 2006-2017 TwinCam models.

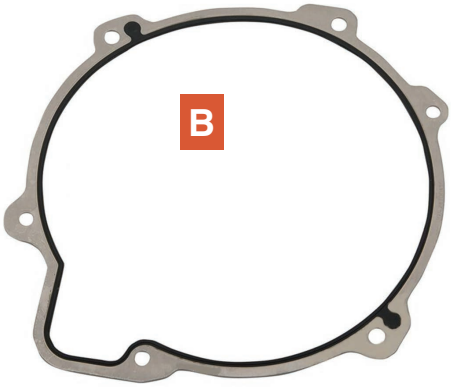

A. *MIDWEST INNER & OUTER PRIMARY*

INNER PRIMARY FOR SOFTAIL®
Multi-year fit primary comes with interchangeable bushings, spacers and seals. One cover fits 1989 thru 2005. Replaces OEM 60630-90 & 60630-94.

88-15 Chrome inner primary for Softail®. SOLD AS KIT

OUTER PRIMARY COVERS FOR SOFTAIL® & DYNA®
Die cast & chrome plated with ribbed inside.

88-18 Fits Softail® & Dyna Glide® 1999 & later. Use 5 hole derby cover. Replaces OEM 60543-99.

NOTE: When using above inner primary for 1989 thru 1993 Softail® applications, 1995 & later outer covers part No. **88-17** or **88-18** will work when used with 1995 & later starter jackshaft assembly.

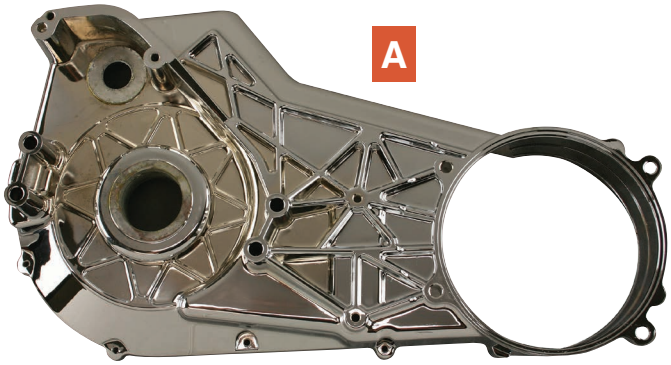

88-15

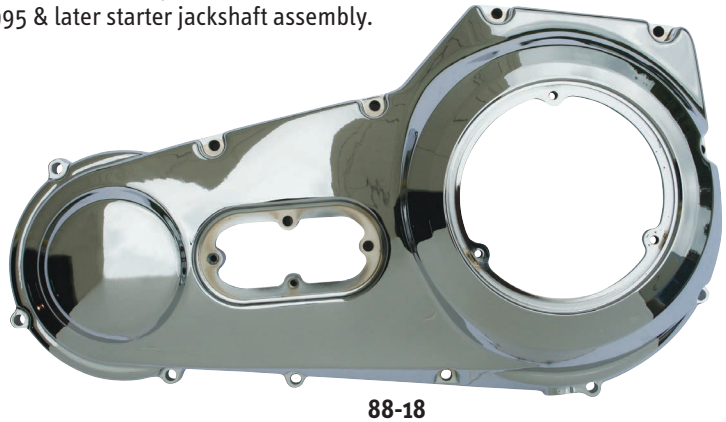

88-18

7

B. *CAST OUTER PRIMARY COVERS FOR FLT 1999 & LATER*

Cast outer primary covers for FXR & FLT.

88-143 For FLT 1999 & later. Chrome.

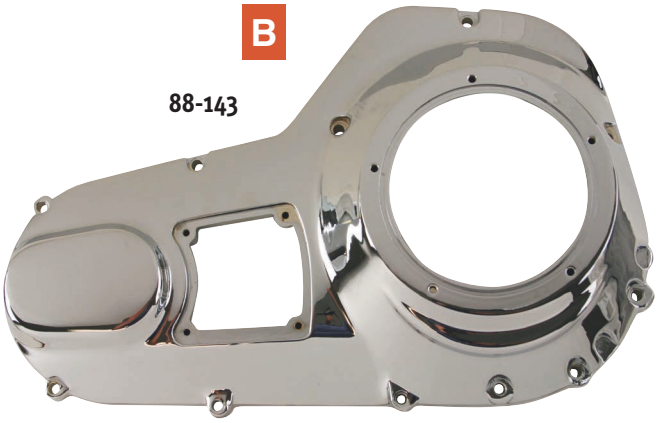

88-143

CHROME PLATED

C. *VENTED PRIMARY COVER FOR BELT DRIVE FXE*

CNC machined vents on chrome plated primary cover for 4 speed FXE 1970 thru 1984, with belt drive.

88-64 Primary cover.

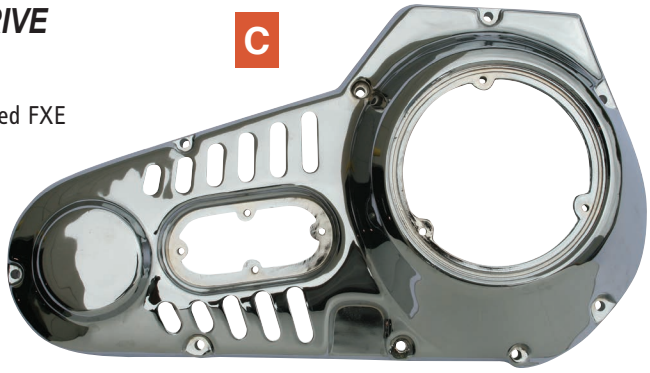

CHROME PLATED

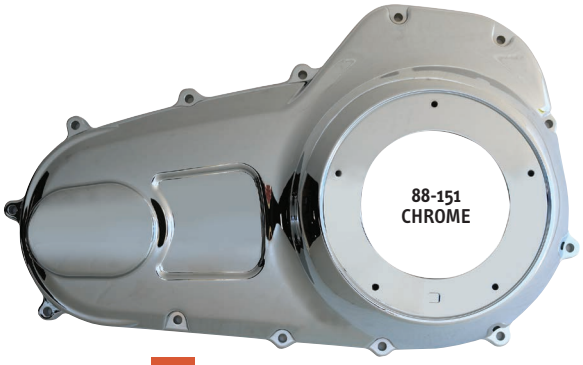

A



A. *NARROW PROFILE PRIMARY COVERS FOR 07-16 TOURING*

These new outer primary covers are shaped to slim the bikes profile on the left side, this narrow profile outer primary cover clears the way for an easier reach to the ground. The open area provides short-limbed riders a straight leg path to the payment and simplifies walking the bike into and out of parking spots. SOLD EACH

88-151 Chrome outer primary cover.
88-152 Satin Black outer primary cover.

Matching narrow style derby covers.

88-153 Chrome derby cover.
88-154 Satin Black derby cover.



B. *CAST OUTER PRIMARY COVERS FOR FX & FXST*

Die cast & reinforced, these outer primary covers offer superb stronger-than-stock construction.

88-49 For FX 1970 thru 1982 (except FXB & FXR). Also fits all 74" & 80" not using floorboards. OEM 60507-82TA.
88-66 Fits FXST 1989 thru 1993. OEM 60543-89. Chrome plated.
88-80 Fits FXST 1995 & later. OEM 60543-95.
95-800 Starter bushing. Fits outer primary cover on 1989 & later Big Twin. OEM 33446-89.

7

B

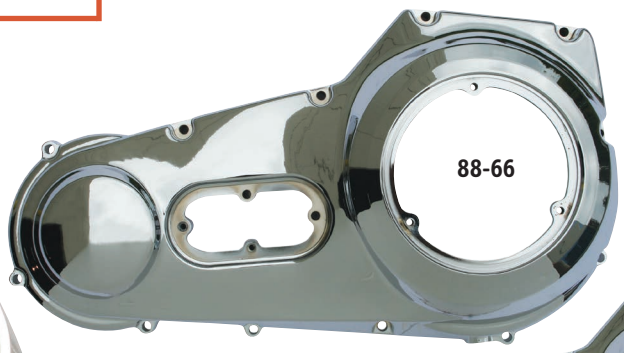



CHROME PLATED

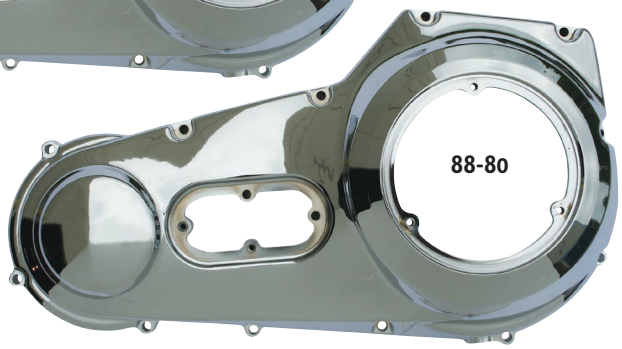

C CHROME PLATED



C. *CAST OUTER PRIMARY FOR BIG TWIN*

Die cast & reinforced. Stronger than stock. Has tab for floorboard mount.

88-52 Fits kickstart Big Twin 1965 thru 1982 & electric start Big Twin 1970 thru 1982, except FLT & FLH belt drive. OEM 60508-82TA. SOLD EACH

D



D. *SCREW KIT FOR OUTER PRIMARY COVER*

Heavy gauge steel stamping featuring flawless copper buffed chrome. For use on all 74" 1936 thru 1964 with proper inner primary.

96-207 Screw for 1936 thru 1963 diamond style outer primary cover.

A. *INNER PRIMARY BEARING AND PARTS*

Fits all models BIg Twin 5 speed 1985 & later.

95-450	Inner primary bearing. OEM 9135.	SOLD EACH
95-451	Inner race. OEM 34091-85.	
95-452	Snap ring. OEM 60678-85.	
95-380	Seal. OEM 12052.	
96-801	Fits all models Big Twin 1985 & later. Six used.	

NOTE: when using this bearing, remove inner race from mainshaft.

A

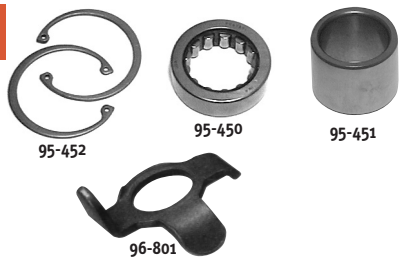

B. *INNER PRIMARY MOUNTING KITS*

These complete mounting kits contain reproductions of the OE H-D® hardware used to mount the inner primary covers on Big Twins.

96-193	For inner primary cover 1936 thru 1954.	SOLD AS KIT
96-194	For stamped steel inner primary cover 1955 thru 1964.	
96-195	For inner primary cover 1965 thru 1969.	
41-143	For inner primary cover on FLT & FXR, 1986 & later.	
41-139	For inner primary cover on Softail® 1986 thru 1993 and Dyna Glide® 1991 thru 1993.	
41-140	For inner primary cover Softail® and Dyna Glide® 1994 & later.	

B



COLONY

7

C. *"FLAT" DERBY COVER FOR BIG TWIN*

89-127	Chrome steel derby cover for 1965 thru 1998 Big Twins.	SOLD EACH

D. *EARLY STYLE INSPECTION COVER FOR BIG TWIN*

Heavy gauge inspection cover for all 74"s with steel primary covers.

89-21	Plain chrome cover.	SOLD EACH

C



CHROME PLATED

D



E. *"DOME" DERBY COVERS FOR BIG TWIN*

Die-cast derby cover. Fits 1965 thru 1998 74" & 80" Big Twins.

89-112	Plain. OEM 25414-70.	SOLD EACH
89-259	Finned, black.	
95-751	O-Ring.	

E



89-112



89-259

F. *EARLY STYLE DERBY COVER*

Cover fits all tin primary covers 1936 thru 1964 and custom & aftermarket covers.

89-13	Chrome plated cover. OEM 60557-36.	SOLD EACH

F



CHROME PLATED

A



B



CHROME PLATED

C



89-100



89-101

D

CHROME PLATED



89-498



89-497

E



89-604

F



CHROME PLATED

G



CHROME PLATED

A. *PRIMARY INSPECTION PLATE WITH BUSHING*

Outer primary inspection cover.

89-183 Fits 1974 thru 1982 FX with the shifter shaft hole. OEM 60579-74. Also fits our chrome outer primary cover. SOLD EACH

B. *PRIMARY INSPECTION PLATE*

Chrome plated steel outer primary inspection cover without peg and shifter hole. Countersunk holes.

89-90 For FL 1965 thru 1984 and FXWG, FXST & FLST, 1982 & later. OEM 60572-78T. SOLD EACH

78-441 Gasket. SOLD AS PKG

C. *CHROME INSPECTION COVERS*

89-100 Chrome inspsection cover for FLT & FXR. Fits 1985-94. SOLD EACH

89-101 Chrome inspsection cover for FXR w/shift hole. Fits 1982-84. SOLD EACH

D. *DIE CAST DOMED COVERS*

Beautifully chromed die cast aluminum covers give that classic chromed look. Use on 1999 & later Twin Cam 88™.

89-498 Derby cover. Replaces OEM 25415-99. SOLD EACH

89-497 Five hole ignition cover. Replaces OEM 32679-99. Includes five button head chrome allen screws & wrench. No gasket provided.

E. *CHROME UPPER BELT GUARD*

Fits 04'-up XL (OEM #60502-04)

9-85 Chrome upper belt guard. SOLD EACH

F. *UPPER "CHOPPER" BELT GUARD*

Upper 'chopper' belt guard fits 70 or 65 tooth pulleys.

9-74 For Softail® 1986 & later. SOLD EACH

G. *LOWER BELT GUARD*

9-63 For FXDWG & FXD, 1991 thru 1999. SOLD EACH

A. *REAR BELT GUARDS*

Beautiful replacements for OEM upper belt guards.

9-65 Fits Softail® 1986 thru 1999 with 70T rear pulley. SOLD EACH
Replaces OEM 60533-86.
9-81 Fits XL 1991 thru 1999.
9-82 Fits XL 2000 thru 2003.

A


9-65

ALL PARTS CHROME PLATED


9-81

B. *BELT GUARDS FOR SOFTAIL®*

These custom belt guards will add a touch of class to your belt area. For 70 tooth pulleys. 1986 thru 1999.

9-73 Chrome plated steel. Imported. SOLD EACH


9-82

C. *CHAIN GUARDS*

All chain guards are fabricated with 18 gauge steel — stock strength. All have mounting brackets designed to clear 16" & 18" tires.

9-10 For rigid 74" & some Triumphs. SOLD EACH
9-58 For FL models 1963 thru 1984. OEM 60302-63.
9-11 For swing arm 74" and FX 1971 & 1972.
9-55 For all 4 speed FX (except Softail®) 1973 thru 1985. OEM 60302-73T.
9-60 For XLCH 1956 thru 1971.
9-7 Fits XLH 1967 thru 1978 and XLCH 1970 thru 1978.

B



C


9-10

7

D. *SPROCKET COVERS FOR SPORTSTER®*

Fits XL models 1954 thru 1970, kick & electric start.

96-328 Polished aluminum cover. SOLD EACH

Fits XL models 1971 thru 1978. OEM 34871-71.

96-351 Polished aluminum cover. SOLD EACH

Fits XL 1982 thru 1990. OEM 34911-81A.

96-419 Chrome plated cover. SOLD EACH

Fits Sportster® 1991 & later. OEM 34911-91.

96-551 Polished aluminum cover. SOLD EACH
96-552 Chrome plated cover.


9-58

9-11

ALL GUARDS CHROME PLATED


9-7

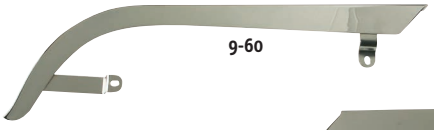
9-60

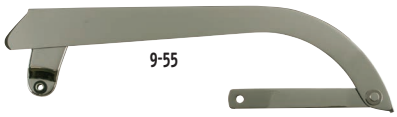
9-55

D


96-351


96-552


96-419


96-328

ULTIMA® GASKETS

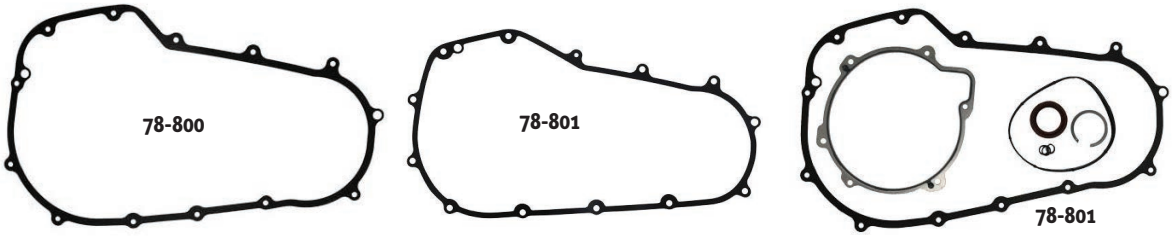

NEW! MILWAUKEE 8 GASKETS

MW#	OEM#	DESCRIPTION	QTY.
PRIMARY MILWAUKEE 8			
78-800		Milwaukee 8 Primary Cover Gasket foamet	EA
78-801		Milwaukee 8 Softtail Primary Cover Gasket foamet	EA
78-802		Primary kit Milwaukee 8 Primary Gasket w/Seals	KIT

MW#	OEM#	DESCRIPTION	QTY.
PRIMARY GASKETS/O-RINGS			
77-727	34901-07	PRIMARY GASKET, BAGGERS 07-LATER	EA
77-728	34901-85	PRIMARY GASKET, 5-SPD BIG TWIN BAGGERS 85-93, FOAMET	EA
77-729	34901-85	PRIMARY GASKET, 5-SPD BIG TWIN BAGGERS 85-93, FIBRE	EA
77-730	34901-94	PRIMARY GASKET, BIG TWIN,FLT,FXR 94-LATER, SILICONE	EA
77-731	34901-94	PRIMARY GASKET, BIG TWIN,FLT,FXR 94-LATER, FOAMET	EA
77-734	34934-06	INNER PRIMARY GASKET, ALL MODELS 06-LATER, METAL W/SILICONE	EA
77-735	34955-04	PRIMARY GASKET, SPORTSTER® 04-LATER, FOAMET	EA
77-812	34986-04	CHAIN INSPECTION COVER GASKET, SPORTSTER® 04-LATER, FOAMET	EA
77-736	34955-89	PRIMARY GASKET, SPORTSTER® 91-03, SILICONE	EA
77-737	34955-89	PRIMARY GASKET, SPORTSTER® 91-03, FOAMET	EA
77-738	60538-81	PRIMARY GASKET, 4-SPD BIG TWIN 65-88, SILICONE	EA
77-739	60538-81	PRIMARY GASKET, 4-SPD BIG TWIN 65-88, FOAMET	EA
77-740	60539-89	PRIMARY GASKET, SOFTAILS® 89-94, FOAMET	EA EA
77-742	60539-94	PRIMARY GASKET, SOFTAIL® & DYNA® 89-05, SILICONE	EA
77-743	60539-94	PRIMARY GASKET, SOFTAIL® & DYNA® 94-05, FOAMET	EA
77-744	60540-36	PRIMARY GASKET, PANHEAD, CORK & RUBBER	EA
77-745	60540-65	PRIMARY GASKET, SHOVELHEAD 65-84, FOAMET	EA
77-746	60547-06	PRIMARY GASKET, SOFTAIL® 06-LATER, FOAMET	EA
77-787	11147	INNER PRIMARY TO CASE O-RING, BIG TWIN 1982-99, TWIN CAM® 99-LATER	EA
77-788	11125	INNER PRIMARY TO CASE O-RING, SHOVELHEAD 1970-82	EA
77-835	12052	INNER PRIMARY BEARING SEAL, BIG TWIN 1984-99; WET CLUTCH OIL SEAL, TC 1999-UP	EA
77-836	25463-94	CLUTCH COVER O-RING, SPORTSTER® 1994-UP	EA
77-896	12018	INNER PRIMARY CLUTCH SEAL, 1971-1984	EA
INSPECTION COVER GASKETS			
77-732	34906-79	INSPECTION COVER GASKET, 5-SPD 1984 FXR & TOURING, FOAMET	EA
77-733	34906-85	INSPECTION COVER GASKET, 5-SPD 85-99 FXR & TOURING, FOAMET	EA
77-747	60567-36	INSPECTION COVER GASKET, PANHEAD 48-64, CORK	EA
77-748	60567-90	INSPECTION COVER GASKET, DYNA® 99-LATER, SOFTAIL® 00-LATER, FOAMET	EA
77-790	11188	INSPECTION COVER O-RING, SPORTSTER® 1991-2003	EA

ULTIMA® GASKETS

MW#	OEM#	DESCRIPTION	QTY.
TRANSMISSION GASKETS AND SEALS			
77-831	11117	SHIFTER SLEEVE O-RING, FXR, DYNA® 1984-1999	EA
77-832	12049	TRANSMISSION MAINSHAFT SEAL, SPORTSTER® 1986-1990	EA
77-833	12050	TRANSMISSION MAINSHAFT SEAL, XL 1991-1994, BIG TWIN 1984-1994	EA
77-834	12067	TRANSMISSION MAINSHAFT SEAL, XL 1995-1999, BIG TWIN 1995-1999	EA
77-844	11165	TRANSMISSION MAINSHAFT QUAD SEAL, XL 1991-2004, BIG TWIN 1984-1999	EA
77-845	35653-98	TRANSMISSION BEARING HOUSING (TRAPDOOR) GASKET, ALL MODELS 1999-2006, DYNA® 1999-2005, FOAMET	EA
77-855	35654-06	TRANSMISSION BEARING HOUSING (TRAPDOOR) GASKET, ALL MODELS 2007-UP, FOAMET	EA
77-837	33295-36	TRANSMISSION SIDE COVER GASKET, 4 SPEED 1936-1986, FOAMET	EA
77-842	36801-87	TRANSMISSION SIDE COVER GASKET, DYNA® 1987-2005, ALL MODELS 1987-2006, FOAMET	EA
77-843	36805-06	TRANSMISSION SIDE COVER GASKET, ALL MODELS 2007-UP, FOAMET	EA
77-838	34824-36	TRANSMISSION TOP COVER, 1936-1979, FOAMET	EA
77-839	34904-86B	TRANSMISSION TOP COVER, 1987-1999, EXCEPT DYNA®, FOAMET	EA
77-840	34917-99	TRANSMISSION TOP COVER, 1999-2005 DYNA®, FOAMET	EA
77-841	34917-06	TRANSMISSION TOP COVER, 2006-LATER DYNA®, FOAMET	EA
77-884	62432-93	OIL SPOUT GASKET, BIG TWIN 1993-LATER	EA
77-891	11290	TWIN CAM® NEUTRAL SWITCH O-RING, 1999-UP	EA
77-895	12013A	MAIN DRIVE GEAR SEAL, 1981-1986	EA
77-897	12030	MAIN DRIVE GEAR SEAL, SPORTSTER® 1991-UP	EA
77-898	12035A	MAIN DRIVE GEAR SEAL, BIG TWIN 1991-1999	EA
77-899	12045	SHIFT SHAFT SEAL, BIG TWIN 1980-2006	EA
77-900	12077	OUTPUT GEAR END SEAL; 2006 DYNA®; 2007-UP ALL MODELS	EA
77-903	62423-90	OIL FILLER SPOUT GASKET, DYNA® 1991-1998	EA
78-601	35607-06	ENGINE TO TRANS INTERFACE	EA
DERBY COVER GASKETS			
77-723	25416-70	DERBY COVER GASKET, 3-HOLE EVO, FOAMET	EA
77-724	25416-99	DERBY COVER GASKET, 5-HOLE TWIN CAM®, FOAMET	EA
77-725	25416-99	DERBY COVER GASKET, 5-HOLE FOR BIG AIM STYLE CLUTCHES	EA

GASKET MATERIALS

COMETIC GASKET

EST KITS

When you see this abbreviation in the description of a kit you can be assured that the best possible materials available are used for every gasket in that kit for that application. EST is short for, EXTREME SEALING TECHNOLOGY. These kits are more expensive than a standard kit for a reason; there is no compromise when we build these kits. These kits contain such materials as MLS head gaskets, Steel viton coated base gaskets, blue viton valve stem seals, AFM material, race style exhaust gaskets that won't fray into the port and the latest upgrades in new gasket technology and fit, such as the one piece Evolution rocker box base gasket made form our single layer .020" embossed viton coated steel. These are truly for the builder who demands that best and appreciates the long-term value for his or her dollar. EST kits are available in Complete Motor Kits and Top End Kits.

MLS™ (MULTI-LAYER STEEL HEAD GASKETS)

Ideal for both aluminum heads to cast iron blocks and aluminum heads to aluminum blocks. Two viton coated outer embossed spring steel layers with a steel inner layer that provides support to the gasket allowing multiple thickness. Withstands the shearing forces created by aluminum heads on cast ironblocks. Retains torque (once the gasket takes a torqueset, re-torquing is not required). Available thickness: .027", .030", .036", .040", .045", .051", .054", .050", .065", .074", .120"

AFM

Is the ideal gasket material for machined surfaces, especially when used between two uneven stamped surfaces that have been plated. AFM is a chemically blown, compounded nitrile synthetic rubber bonded to an aluminum core with temperature resistance of over 2500 F. AFM material has an 85% recovery while maintaining a strong torque retention. AFM does not require gasket sealers or silicone bead. Re-torque is NOT required. Available thickness: .018", .032", .045", .060"

CFM-20

A perforated steel core with an elastomer surface is ideal for head gaskets allowing heat to be drawn evenly across the gasket surface while providing maximum sealing characteristics when exposed to coolants and oils. Available thickness: .043", .051", .059"

SPRING STEEL

A stainless steel core with a .001" thick coating of viton rubber on both sides. Available thickness: .010", .014", .020"

AFM GASKETS & KITS

BIG TWIN PRIMARY GASKET & SEAL KITS

MW#	COMETIC REF#	APPLICATION
78-567	C9885	94'-up FXST, FXD Primary Kit
78-568	C9886	89-93' FXST, FXD Primary Kit
78-569	C9887	65-88' FXST, FX, FL 4-Speed Primary Kit
78-570	C9888	94'-up FLT, FLHT, FXR Primary Kit
78-571	C9889	80-93' FLT, FLHT, FXR Primary Kit

PRIMARY GASKETS BIG TWIN

Single	Single	5 Pack	5 Pack		
78-497	**C9307F1**	**78-427**	**C9307F5**	**34901-94A**	**94'-UP FLT, FXR Big Twin Primary**
78-498	C9308F1	**78-425**	C9308F5	34901-79A	80-93' Big Twin Primary FLT/FXR
78-515	C9309F1	**78-437**	C9309F5	60539-89	89-UP Softail®, Dyna® Primary
78-526	C9607F1	—	C9607F5	60538-81C	65-89' FXST, FX / FL 4 -SPEED

INSPECTION COVER GASKETS BIG TWIN

Single	Single	5 Pack	5 Pack		
78-512	C9305F1	**78-431**	C9305F5	34906-85A	89'-UP FXR, FLT Insp. Cover
78-495	C9303F1	**78-430**	C9303F5	34906-79A	80-84' FXR,FLT Insp. Cover
78-573	C9326F1	**78-574**	C9326F5	60567-36	36'-58'-64'-69' FL, XLCH Inspection Cover
78-522	C9331F1	**78-441**	C9331F5	60567-65B	65'-UP Dyna® & Softail® 4&5 Speed Inspection Cover

DERBY COVER GASKET BIG TWIN

Single	Single	5 Pack			
78-541	C9997F1	**78-542**	C9997F5	25416-99C	99'-Present Derby Cover Replaces O-ring
78-524	C9338F1	**78-383**	C9338F5	25416-70	70-83' FL, FXR Derby Cover

SPORTSTER® PRIMARY GASKET

Single	Single	5 Pack			
78-579	C9943F1	**78-580**	C9943F5	34955-04	04'-UP Sportster® Primary
78-503	C9314F1	**78-435**	C9314F5	34955-89A	91-03' Sporty Primary
78-500	C9310F1	**78-434**	C9310F5	34955-75X	86-90' Sporty Primary

TWIN CAM® INDIVIDUAL REPLACEMENT GASKETS, SEALS, O-RINGS 1999-UP

IMPORT MW#	COMETIC MW#	COMETIC REF#	OEM REF#	APPLICATION	QTY
• **Primary Housing Gaskets**					
	78-427	C9307F5	34901-94	Primary Gasket FLT, FXR 1994 -UP, AFM .060"	5
	78-437	C9309F5	60539-89	Primary Gasket Softail®, Dyna® 1989-UP, AFM .060 "	5
	78-541	C9997F1	25416-99C	Derby Cover Gasket Replaces O-ring1999-UP	1
	78-542	C9997F5		Derby Cover Gasket Replaces O-ring1999-UP	5
	95-820	C9662	25416-99	Derby Cover O-ring all Big Twin Models	5
	78-431	C9305F5	34906-85A	Inspection Cover Gasket FLT, FXR Models 1999 -UP, AFM .060"	5
	78-441	C9331F5	60567-90A	Inspection Cover Gasket Dyna® Models 1999 -UP, Softail® '00-UP Models, AFM .060"	5
	95-714	C9441	11147	Inner Primary to Case O-ring All Models 1999 -UP	10
95-737	**95-790**	C9260	12052	Wet Clutch Oil Seal All Models 1999 -UP	5
95-794	**95-821**	C9261	12066	Starter Motor Shaft Oil Seal All Models 1999 -UP	5

NOTE: COMETIC REF# AND OEM REF# FOR REFERENCE PURPOSES ONLY

1984-99 BIG TWIN EVO INDIVIDUAL REPLACEMENT GASKETS, SEALS, O-RINGS

IMPORT MW#	COMETIC MW#	COMETIC REF#	OEM REF#	APPLICATION	QTY
• Derby Cover Gaskets and O-rings					
	78-383	C9338F5	25416-70C	70'-E84 Derby Cover Gasket , AFM60	5
	95-751A	C9442	25416-84	L84'-98 Derby Cover O-ring	10
95-761	**78-565**	C9363	31433-84A	84'-98 Derby Cover Bolt Washer metal	5
• Inspection Cover Gaskets					
	78-430	C9303F5	34906-79	80'-84 FXR, FLT Primary Inspec. Cover Gasket, AFM60	EA/5
	78-431	C9305F5	34906-85	85'-UP FXR, FLT Primary Inspection Cvr. Gasket, AFM60	5
	78-440	C9326F5	60567-36	36'-64 FL, FLTH, 58-69 XLCH Inspection Cover Gasket, AFM60	5
	78-441	C9331F5	60567-65C	65'-UP Inspec. Cover Gasket Dyna® & Softails®, AFM60	5
• Primary Gaskets, O-rings					
	78-497	C9307F1	34901-94A	94'-UP FLT, FXR Big Twin Primary	EA
	78-498	C9308F1	34901-79A	80-93' Big Twin Primary FLT/FXR	EA
	78-515	C9309F1	60539-89	89'-UP Softail®, Dyna® Primary	EA
	78-526	C9607F1	60538-81C	65'-88 FXST, FX / FL 4 -SPEED	EA
	95-831	C9536	11125	70-E82 Inner Primary O-ring	10
	95-832	C9441	11147	L82-99 Inner Primary O-ring	10
95-784	**95-833**	C9518	12018	70-E84 Inner Primary Bearing Seal	5
95-737	**95-790**	C9260	12052	L84-99 Inner Primary Bearing Seal double lip	5
	78-442	C9343	60629-55	55-64 Chain Housing to Motor Gasket	10
• Shifter Shaft Seals					
	95-838	C9484	11117	L84'-99 FXR,DYNA® Shifter Sleeve O-ring	25
95-715	**95-839**	C9357	11148	82'-E84 Shifter Shaft Quad Seal	10
	95-840	C9661	11191	90'-99 FXST, FLST Shift Lever O-ring	25
95-786	**95-841**	C9525	60641-74	74'-85 Shifter Shaft Seal	5

7

1936-UP BIG TWIN INDIVIDUAL REPLACEMENT GASKETS, SEALS, O-RINGS

IMPORT MW#	COMETIC MW#	COMETIC REF#	OEM REF#	APPLICATION	QTY
• Seals, O-rings and Washers					
	95-843	C9498	6007	80'-98 Drain Plug Washer	10
95-703		C9435	11105	90'-99 Drain Plug O-ring	10
95-798		C9529	11115	65'-86 Counter Shaft O-ring	10
95-717		C9361	11165	L84'-99 Mainshaft Quad Seal	10
	95-799	C9530	11166	84'-86 Mainshaft Bearing O-ring	25
95-795	—	C9263	11178	87'-98 Filler Plug O-ring	25/10
95-723		C9447	11179	87'-99 Clutch Cable O-ring	25
	95-779	C9531	12010	L79'-86 Shifter Shaft Seal	5
	95-789	C9493	12013A	L81'-86 Main Drive Gear Seal	5
	95-728	C9372	12013	L81'-86 Main Drive Gear Seal	5
95-778		C9494	12014	65'-E84 Clutch Hub Nut Seal	5
95-780		C9506	12022	L66'-E81 Main Drive Gear Seal	5
95-793	**95-792**	C9258	12035A	91'-99 Main Drive Gear Seal	5
	95-796	C9527	12044DL	80'-E84 Main Drive Gear Seal	1
	95-787	C9259	12045DL	80'-99 Shifter Shaft Seal	5
95-736		C9359	12050	L84'-94 Main Shaft Seal	1
	95-791	C9262	12067A	95'-99 Mainshaft Seal	1
	95-848	C9497	33043-80	65'-95 Neutral Indicator Washer	10
	95-762	C9374	33076-37	37'-86 Starter Crank Seal	10
	96-299	C9519	34036-36	36'-E79 Cam Shaft Seal rubber	10
	95-785	C9523	35230-39DL	36'-79 Mainshaft Seal	5
	95-767	C9411	35231-36	36'-E77 Mainshaft Oil Seal cork washer	10
	95-768	C9354	37101-84	84'-86 Clutch Release Lever O-ring	1
95-782	**95-772**	C9513	37741-67A	L79'-81 Mainshaft Seal Double Lip	5
	95-783	C9514	37741-82DL	82'-86 Main Drive Gear Seal Double Lip	5
	95-773	C9403	62702-52	36'-86 Drain Plug Washer	10

SHOVELHEAD & PANHEAD

IMPORT MW#	COMETIC MW#	COMETIC REF#	OEM REF#	APPLICATION	QTY
• **Derby Cover Gaskets and O-rings**					
	78-383	C9338F5	25416-70C	70-E84 Derby Cover Gasket , AFM60	5
• **Inspection Cover Gaskets**					
	78-430	C9303F5	34906-79	80-84 FXR, FLT Primary Inspec. Cover Gasket, AFM60	5
	78-440	C9326F5	60567-36	36-64 FL, FLTH, 58-69 XLCH Inspection Cover Gasket, AFM60	5
	78-441	C9331F5	60567-65C	65-UP Inspec. Cover Gasket Dyna® & Softails®, AFM60	5
• **Primary Gaskets, O-rings**					
	78-498	C9308F1	34901-79A	80-93' Big Twin Primary FLT/FXR	EA
	78-526	C9607F1	60538-81C	65'-88 FXST, FX / FL 4 -SPEED	EA
	78-438	C9607F5	60540-65A	1965 / 1980. THIN, .032", 9 HOLE	5
	78-437	C9309F5	60539-89	FXST & DYNA® 1989 & LATER	5
	95-831	C9536	11125	70-E82 Inner Primary O-ring	10
	95-832	C9441	11147	L82-99 Inner Primary O-ring	10
95-784	**95-833**	C9518	12018	70-E84 Inner Primary Bearing Seal	5
	78-442	C9343	60629-55	55-64 Chain Housing to Motor Gasket	10
• **Shifter Shaft Seals**					
95-715	**95-839**	C9357	11148	82-E84 Shifter Shaft Quad Seal	10
95-786	**95-841**	C9525	60641-74	74-85 Shifter Shaft Seal	5

BUELL® & EVO SPORTSTER®

IMPORT MW#	COMETIC MW#	COMTEIC REF#	OEM REF#	APPLICATION	QTY
• **Primary Cover Gaskets, Seals**					
95-712			11139	86'-90 Primary Filler Plug O-ring	10
	78-580	C9943F5	34955-04	2004-UP Primary Cover Gasket	5
	78-660	C9957	34986-04	2004 -UP Chain inspection cover gasket "Rubber"	5
95-703		C9958	11105	2004 -UP Primary drain plug O-ring	5
95-721		C9436	11171	86'-UP Primary Inspection Cover Screw O-ring	10
95-723		C9447	11179	88'-99 Clutch Cable O-ring	25
	95-724	C9434	11187	91'-93 Clutch Inspection Cover O-ring	10
	95-725	C9439	11188	91'-99 Inspection Cover O-ring	10
	95-859	C9958	25463-94	94'-04 Clutch Cover O-ring	5
95-761		C9363	31433-84A	91'-93 Sealing Washer	5
	78-423	C9401	34624-77	86'-90 Footpeg Stud Gasket	10
	78-434	C9310F5	34955-75	86'-90 Primary Cover Gasket, AFM60	5
	78-435	C9314F5	34955-89A	91'-99 Primary Cover Gasket, AFM60	5
	95-768	C9354	37101-84	86'-UP Shifter Shaft Seal	1
95-765		C9353	35151-74	86'-99 Motor Sprocket Shaft Seal	5
	95-819	C9632	12068	2004-UP Motor Sprocket Shaft Seal	5
	95-818	C9667	11289	2004-UP Crank position sensor O-ring	5
• **Oil Pump and Related Gaskets,Seals, and O-rings**					
	95-734	C9376	12036A	86'-90 Oil Pump Seal metal	5
	95-755	C9449	26433-77	86'-90 Oil Pump Check Valve O-ring	10
	95-725	C9439	26434-76A	86'-90 Oil Pump O-ring	10
	95-757	C9437	26434-91	91'-UP Oil Pump Cover O-ring	10
	78-399	C9399	26495-75	86'-90 Oil Pump Gasket	10
	78-400	C9315	26495-89B	91'-UP Oil Pump Gasket	10
	78-661	C9962		2004-UP Oil jet assembly gasket	6
• **Starter and Transmission Gaskets,Seals, and O-rings**					
	78-418	C9312	31488-81B	86'-UP Starter Gasket	10
	95-732	C9362	12030	91'-UP Main Drive Gear Seal	5
	95-735	C9356	12049-DL	86'-90 Transmission M/S Seal	5
95-736		C9359	12050	91'-94 Transmission M/S Seal	1
	95-791	C9262	12067A	95'-99 Main Drive Gear Seal	1

IRONHEAD SPORTSTER® KITS

IMPORT MW#	COMETIC MW#	COMETIC REF#	OEM REF#	APPLICATION	QTY
• Primary, Clutch, and Transmission Gaskets,Seals,and O-rings					
95-704			11106	71'-E78 Primary Filler Cap O-ring(1)	10
95-712		C9446	11139	L78'-85 Primary Filler Cap O-ring	10
	78-432	C9317F5	34952-52	XR750, 58'-69 XLCH Primary Cover Gasket AFM .060"	5
	78-667	C9318F5	34955-67	67'-76 XLH, 70'-76 XLCH Primary Cover Gasket AFM .060"	5
	78-433	C9703	34955-67A	67'-76 XLH, 70'-76 XLCH Primary Cover Gasket .031"	5
	78-440	C9326F	60567-36	58'-69 XLCH Inspection Cover Gasket AFM .060"	5
95-322 ea			11103	L57'-66 XLH, 57'-69 XLCH Clutch Gear O-ring	1
95-708		C9455	11119	67'-70 XLH, 70' XLCH Clutch Gear O-ring	10
	95-769	C9364	37339-53	57'-70 Release Rod Oil Seal	10
95-770		C9368	37531-56B	57'-66 XLH, 57'-69 XLCH Clutch Gear Seal	5
	95-771	C9371	37740-57	L57'-66 XLH, 57'-69 XLCH Clutch Shell Seal	5
95-782		C9513	37741-67	67'-70 XLH, 70' XLCH Clutch Shell Seal "	5
	78-436	C9319	37762-52	57'-70 Clutch Cover Gasket	10
	95-762	C9374	33076-37	57'-79 Kicker Shaft Seal	10
95-763		C9370	34035-52	57'-85 Shifter Shaft Seal	5
	78-423	C9401	34624-77	77'-85 Left Footrest Stud Boss Gasket	10
	95-735	C9356	12049DL	L84'-85 Transmission Mainshaft Seal	5
95-764		C9366	35151-52A	57'-E84 Trans Mainshaft Seal, 57'-E74 Sprocket Shaft	5
95-765		C9353	35151-74	L84'-85 Trans Mainshaft Seal, L74'-85 Motor Sprocket Shaft	5

TRANSMISSION GASKETS

MW#	COMETIC REF#	OEM REF#	APPLICATION	QTY
•Complete Transmission Kits				
77-349	C9464	33031-70	E70'-E 79 Big Twin	kit
77-350	C9465	33031-80	L79'-82 Big Twin 4 Speed	kit
77-351	C9466	33031-82	80'-E84 Big Twin 5 Speed	kit
77-352	C9467	33031-85	L84'-92 Big Twin Except Dyna® 5 Speeds	kit
77-353	C9468	33031-91	91'-99 Dyna® & FXDB-S Evolution Models	kit
77-354	C9469	33031-93	93'-99 FLT,FLH, FXR, Dyna® & Softails® Evolution Models	kit
77-400	C9639	26072-99	99'-UP FLT, FLH, Softail® 00-UP, Twin Cam® Models	kit
77-399	C9640	26072-99	99'-UP Dyna® Twin Cam® Models	kit
(Kit contains all of the necessary gaskets, seals, o-rings, end cover, top cover gaskets and all washers needed to completely rebuild the transmission)				
• Transmission Gaskets				
78-458	C9490	26072-90	90'-98 Oil Pan Gasket Dyna®	10
78-459	C9265	26077-93	93'-98 Oil Pan Gasket FLT	5
78-448	C9517	33196-79	L79'-86 Shifter Cover Gasket	10
78-46	C9515	33295-36	36'-86 End Cover Gasket	10
78-464	C9520	34552-52	52'-E79 Ratchet Cover Gasket	10
78-465	C9521	34565-52	52'-E79 Shifter Adapter Plate Gasket	10
78-466	C9522	34824-36	36'-E79 Top Cover Gasket	10
78-463	C9516	34824-79	L79'-86 Top Cover Gasket	10
78-453	C9499	34904-79	80'-86 Top Cover Gasket	10
	C9983	34904-86B	87'-99 Top Cover Gasket "Thin Version"	10
78-456	C9488	34917-90A	90'-98 Top Cover Gasket Dyna®	10
78-452	C9264	35652-79A	80'-98 Bearing Housing Gasket	10
78-454	C9526	36801-79	80'-86 End Cover Gasket	10
78-455	C9483	36801-87B	87'-UP Trans End Cover Gasket All Models	10
78-457	C9489	62423-90	91'-98 Dyna® Oil Filler Spout Gasket	10
78-460	C9266	62432-93	93'-99 FLT Oil Filler Spout Gasket	10
78-447	C9512	67141-36	36'-83 Speedometer Drive Gasket	10
	C9642	11290	Twin Cam® Neutral Ind. Switch O-ring All Models 1999 -UP	10
	C9644	35653-98	T/C Bearing Housing Gasket All Models 1999 -UP	10
78-455	C9483	36801-87B	T/C Trans End Cvr Gasket All Models 1998 -UP	10
78-461	C9267	34904-86XC	T/C Trans Cover Gasket All Models 1999 -UP "Wide Version"	10
78-460	C9266	62432-93	T/C Oil Tank Filler Spout Gasket FLT's 1999-UP	10
	C9247	26077-99	T/C Oil Pan Gasket FLT's 1999-UP	10
	C9645	34917-99	T/C DYNA® Trans. Top Cover Gasket 1999-UP	10
	C9646	26072-99	T/C DYNA® Oil Pan Gasket 1999-UP	10

TWIN CAM TRANSMISSION GASKET & SEAL KIT

NEW!

Twin Cam Transmission Gasket & Seal Kit

95-2 Includes Transmission O-Rings (x3),
Transmission Main Drive Seal,
Main Drive Gear Oil Seal,
Clutch Cover Gasket,
Top Cover Gasket,
Bearing Housing Gasket

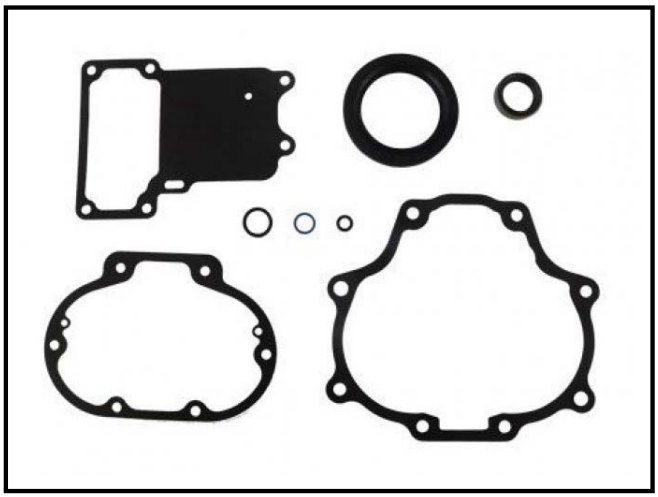

MISCELLANEOUS GASKETS

7

MISCELLANEOUS GASKETS AND SEALS FOR VARIOUS H-D® APPLICATIONS

MW#	OEM REF#	APPLICATION	QTY
95-748	24931-39	Front chain inner cover seal for 1939 thru 1958 FL & FLH	10



A

A. INNER PRIMARY/CRANK CASE O-RING GROOVE REPAIR GASKET

If the O-ring groove on your crankcase left side is damaged, we have the solution for you. This .038" foamet gasket replaces the O-ring and will prevent your primary from leaking.

77-928 Primar/Crankcase Gasket. '84 & up Evo & Twin Cam® engines. SOLD EACH

Gas Air Oil



GAS TANKS, PETCOCKS,
CARBURETORS & PARTS,
REBUILD KITS, MANIFOLDS,
AIR FILTERS, OIL TANKS, FILTERS,
LINES, TEMP & PRESSURE GAUGES
& OIL COOLERS

ULTIMA® GAS TANKS



20-60

A

A. FAT BOB® STYLE GAS TANKS

These quality constructed tanks are designed to accept the standard or custom gas caps and use the standard late-model H-D® gas petcock. To give your late-model Harley® that authentic Fat Bob® look, these tanks are made to accept the stock dashes and also both FL & FX speedo equipment. 3.5 Gallon steel Fat Bob® gas tanks replace OEM 61216-69; 5 gallon gas tanks replace OEM 61230-69. Fits stock H-D® Fat Bob® frame & can be adapted to many other frames.

20-59 3.5 Gallon tank, standard cap. **SOLD AS PAIR**
20-60 5 Gallon tank, standard cap.
20-62 3.5 Gallon tank, screw-in cap.
20-63 5 Gallon tank, screw-in cap.



20-62

B

B. FLAT SIDE FAT BOB® STYLE GAS TANKS

A complete line of flat side tanks fits models 1985 & later, in sizes & styles to satisfy everybody. Sleek custom 4.2 gallon stretched or 6.0 gallon for the long haul, and sizes in between. Made by the most experienced tank manufacturer in the industry. A small amount of bondo work is needed on stretched tanks to blend in weld lines. **NOTE:** Screw caps & aircraft caps must be ordered separately.

REGULAR TANKS

SOLD AS PAIR

20-65 5.0 Gallon tank for screw cap.



20-65

8

C



20-40

20-41

C. 2.2 ALIEN GAS TANK

These quality steel gas tanks comes undrilled at the mounting tabs. Early cam style gas cap & 3/8 or 1/4 NPT petcocks can be used. Total length 18", total height 9", tunnel width 2.5".

20-40 2.2 Gal, single fill, Alien tank. **SOLD EACH**
20-41 2.2 Gal, dual fill, Alien tank. **SOLD EACH**

GAS TANK SPECIFICATIONS

All tanks have a special carburetor vent used on H-D® motorcycles. All tanks, except flush cap models, use our standard gas cap, part No. **21-6**, or a standard H-D® gas cap.

X = 1/4" Female opening.
O = 3/8" Female opening.

IMPORTANT GAS TANK INFORMATION

Carefully check your new gas tank for flaws. **DO NOT SAND OR GRIND SEAMS OR JOINTS**. Check petcock openings to make sure petcock can be installed easily. Clean inside of tank and always install a suitable gas tank sealer. **ALWAYS RUBBER MOUNT GAS TANK FRONT & REAR**. MIDWEST MOTORCYCLE SUPPLY DIST. CORP. is not liable for paint work or labor claims of any kind. If special paint jobs are put on tank, we recommend pressure testing prior to painting. We guarantee all tanks that we sell for a period of sixty days. Our guarantee is limited to the replacement of the tank only, and does not cover paint work or labor of any kind.

A. *SOFTAIL® GAS TANKS FOR TWIN CAM®*

5.1 Gallon capacity one piece custom tanks with dash mount.
Left bung accepts OEM gauge.

2000 & LATER CARBURETED MODELS

20-110 For 2000 & later carbureted models. SOLD EACH
20-112 Same as above part No. **20-110** except with 2" stretch.



CHOPPER TANKS

Has a tunnel width of 2.5" and has 1/8-27 NPT holes for rear crossover .Weld-on mounts included.

B. *SINGLE CAP 1 PIECE GAS TANK*

4.5" STRETCH, 22-3/8" TUNNEL, 23" LENGTH, 4.7 GALLON
20-125 Screw-in cap. Gas cap not included.



C. *SINGLE CAP STRETCH 1 PIECE GAS TANK*

If you're building a 1984 thru 1999 Softail® style frame that has more stretch than a standard frame — this tank is for you. Holds approximately 3.8 gallons. The included chrome plated trick gas cap adds to the looks of this tank.

20-100 4" Stretch one piece gas tank. SOLD EACH
21-366 Replacement gas cap. SOLD EACH



D. *STRETCHED & FLAT BOTTOM XL GAS TANKS*

XL Gas tanks for 2004 - '06.

20-137 OEM type flat bottom tank w/center screw in cap. 3.3 gallon. SOLD EACH
20-139 2" stretch tank w/center screw in cap. 4 gallon.





8

E. *RUBBER MOUNTED "BIG CAPACITY" GAS TANKS FOR SPORTSTER®*

Classic style with increased gas volume make these tanks a winner! 3.4 Gallon capacity. Rubber tank mounts help prevent vibration stress. Tank has rolled edges and includes bolt-in aircraft quality gas cap, as well as mounting hardware. More miles between gas stops with good looks too! (Paint not included.)

20-98 For 1982 thru 1993 Sportster®.
20-99 For 1994 & later Sportster®.



F. *SOFTAIL® GAS TANK FOR 2000 & LATER*

20-111 Softail® Gas tank for 2000 & later carbureted models with two locking flush mount caps (included).





A. *REGULAR TUNNEL SPORTSTER®STYLE GAS TANK*

Pressure tested under water. Utilizes stock H-D® gas cap & petcock. Tank has Tillotson tube vent if needed.

2.3 Gallon tank. Tunnel 3-1/2" high x 2" wide. Tank 17" long x 9-1/2" wide.

20-20 1954 thru 1978 SOLD EACH

3.1 Gallon tank. Tunnel 31-/2" high x 2" wide. Tank 17" long x 10-3/4" wide.

20-53 1954 thru 1978. SOLD EACH
20-61 1979 thru 1981.
20-66 1982 thru 1993.

B. *LOW TUNNEL STEEL SPORTSTER®STYLE GAS TANK*

Great looking tank has mid & rear petcock openings and Tillotson tube vent if needed. Finest quality, no ripples or die marks. Fully tabbed. Use stock H-D® gas cap.

20-51 3.5 Gallon tank. Tunnel 1" high x 2-3/4" wide. Tank 21" long x 10-1/2" wide. SOLD EACH

C. *FAT BOB® STYLE GAS TANK FOR SPORTSTER®*

Give 1982 thru 1993 Sportsters® the Fat Bob® tank look. One piece construction 3.2 gallon tanks with mounting hardware.

20-1 Smooth top. SOLD EACH

D. *FAT BOB® STYLE GAS TANKS FOR SPORTSTER®*

3.8 Gallon tanks include improved rubber mounts front and back. Screw style caps must be ordered separately.

20-93 3.8 Gallon with smooth top. Fits 1982 thru 1993. SOLD EACH
20-94 3.8 Gallon with FL style dash and base plate. Fits 1982 thru 1993. Dash accepts the larger FL speedometer and has no ignition switch hole, so re-wiring is not necessary.

E. *STRETCHED SMOOTH TOP TANK*

4.2 Gallon tanks fit 1984 thru 1999 Softail®. Necessary mounting hardware included. No welded tips. Some finishing will be needed due to seam in middle. Also some stock and custom seats may not match up to tanks due to 3" stretch.

20-101 Tank with single right side aircraft style cap. SOLD EACH

F. *XL '07-'14 OEM STYLE EFI GAS TANK*

3 Gallons, 1 Gas cap center opening.

20-141 Tank with center gas cap opening. SOLD EACH

G. *6 GALLON LATE MODEL TANK*

Fits '08-'17 FLHT/FLTR

20-102 6 Gallon tank with hardware & center cap. SOLD EACH

A. *MOUNTING KIT FOR FAT BOB® TANKS*

Kit includes all necessary hardware to mount 1984 & earlier tanks.

21-136 SOLD AS KIT

B. *MOUNTS FOR FAT BOB® TANKS*

Replacement Fat Bob® tank mounts; can also be used on custom frames where mounts did not exist.

5-64 Front lower bracket. SOLD EACH

C. *MOUNT FOR FLAT SIDE GAS TANKS*

Includes all necessary hardware to mount 3.5 or 5 gallon flat side gas tank.

5-181 Mounting kit. SOLD AS KIT

D. *GAS TANK MOUNTING GROMMETS FOR SOFTAIL®*

Molded rubber grommets for mounting flat side gas tanks on Softail® models 1984 & later.

5-165 Grommet. Replaces OEM 11447. SOLD AS PKG OF 6

E. *RUBBER MOUNTS*

Rubber mount and stud, with steel side plates, for battery box and oil tank. Can be used for many custom applications.

5-80 1/4 - 20 Threaded studs. OEM 62563-65. SOLD EACH

5-133 5/1 6 -18 Female one side with 5/16 - 18 male opposite side. OEM 50235-63.

F. *SWITCH & COIL RELOCATION KITS FOR SPORTSTER® 1995 & LATER*

5-245 Ignition switch & coil relocation kit. SOLD EACH

5-246 Coil relocation bracket.

G. *ONE-PIECE MOUNT FOR FAT BOB® STYLE GAS TANK*

This one-piece bracket for mounting our Fat Bob® tanks or OEM tanks will work on either custom frames or OEM frames where the brackets have been torched off. Once you have the tanks positioned right where you want them, this bracket can be welded on for even stronger support.

5-135 One-piece Fat Bob® style tank mounting bracket kit. SOLD AS KIT

H. *EARLY FRAME FLAT SIDE TANK MOUNT KIT*

Kit makes it possible to install late model flat side gas tanks with rubber isolaters on Big Twin 1958 thru 1984 Big Twin frames. Includes necessary brackets, hardware and instructions. **NOTE:** Welding is required.

5-194 Flat side tanks to early frame kit. SOLD AS KIT

I. *GAS TANK MOUNTING HARDWARE*

5-160 Chrome gas tank mounting flatside hardware kit. Fits 91'-99' Softails® w/split tanks. SOLD AS KIT

J. *HEAVY DUTY RUBBER MOUNTS*

Heavy duty rubber mounts for oil tanks, battery trays and other applications. The rubber body conceals an internal wound spring that's welded to the end plates.

5-132 1/4 - 20 Threaded stud on both sides. Replaces OEM 62563-65. SOLD EACH

5-134 5/16 -18 Female on one side, 5/16 -18 male on opposite side. Replaces OEM 50235-63.



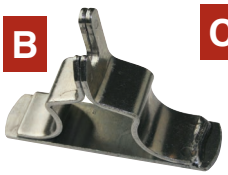







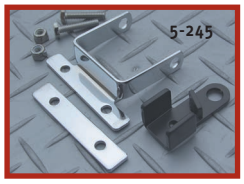









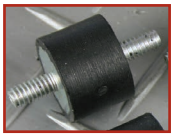



8

A

CHROME PLATED



5-237

5-238



COLONY

5-239

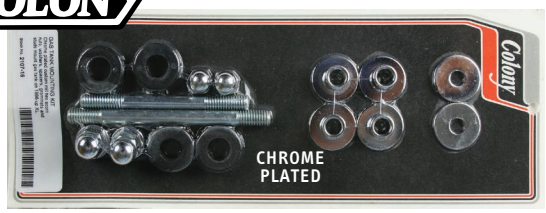

B



C



CHROME PLATED

D



CHROME FINISHED PLASTIC

E



CHROME PLATED

F



G

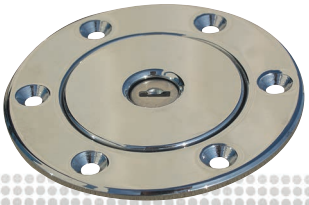

A. *GAS TANK MOUNTING KITS*

Chrome plated custom acorn nuts, washers and stud.

5-237 Kit to mount gas tank on Softail® 2000 & later. SOLD AS KIT
5-238 Kit to mount gas tank on Softail® 1984 thru 1999.

Chrome plated custom acorn nuts, washers, studs, spacers and grommets.

5-239 Kit to mount gas tank on Sportster® 1996 & later. SOLD AS KIT

B. *LOCKABLE FLUSH MOUNT GAS CAPS*

GAS CAP SET

Replacement flush mount cap set as used on our gas tanks.

21-365 Locking gas cap set (right & left) with keys. SOLD AS SET

SINGLE VENTED CAP

Replacement flush mount cap as used on our gas tanks.

21-366 Locking vented gas cap with keys. SOLD EACH

C. *STOCK STYLE GAS CAPS*

For American type filler neck. Use on late 1936 thru 1972 H-D® models.

21-6 Vented gas cap, OEM 61103-36. SOLD EACH
21-118 Non-vented gas cap, OEM 61103-65.

D. *LATE STYLE GAS CAPS*

For screw-in style tanks. Chrome finished plastic body.

21-171 Left (non-vented). OEM 61103-83. SOLD EACH
21-172 Right (vented). OEM 61102-83A.

E. *STOCK STYLE GAS CAPS*

For American type filler neck. Use on late 1973 thru 1982 H-D® models.

21-38 Vented gas cap, OEM 61102-73. SOLD EACH
21-107 Non-vented gas cap, OEM 61103-73A.

F. *SLIM-LINE CHROME BILLET GAS CAPS*

Knurled edges for easy removal. Slim-line design keeps a nice, flowing line on the top of your tanks.

21-322 Slim-point style, vented & non-vented. SOLD AS PAIR
21-323 Slim-point style, vented. SOLD EACH
21-324 Slim-smooth style, vented & non-vented. SOLD AS PAIR
21-329 Slim-smooth style, vented. SOLD EACH

G. *AIRCRAFT GAS CAPS*

Flush mounted aircraft caps with flip-up cap & lock are designed to work with all aircraft cap style tanks and can be used on custom set-ups if you want to modify your present tanks.

21-274 Bolt-in caps, vented and non-vented. SOLD AS PAIR
21-275 Bolt-in cap, non-vented. SOLD EACH
21-276 Bolt-in cap, vented. SOLD EACH

78-100 Replacement gasket. SOLD EACH
21-303 Replacement screws; 12 per package. SOLD AS PKG.

A. *CHROME PLATED STEEL LATE STYLE GAS CAPS*

Chrome plated steel matched with the new low pressure relief vent. Will work on late (1985 thru 1991) gas tanks.

21-249 Left (non-vented). OEM 61103-83. SOLD EACH
21-250 Right (vented). OEM 61102-83A. Also fits single cap models except FLT, FLTC, FLHT & FLHTC.



B. *LOCKING GAS CAPS W/PAINT SAVER*

These caps are made from aluminum & fits all screw bung gas tanks from 82'-present. They are beautifully chrome plated, supplied w/ locking tool, new viton fuel resistant seals and flush mounts to give a great custom look. The paint saver has a low profile design w/removable 1-1/2" dia. center screw in locking cap.

21-445 Vented, chrome gas cap. SOLD EACH
21-446 Non-vented, chrome gas cap.



C. *LOCKABLE GAS CAPS W/COVER*

These gas caps are fitted w/a key hole cover that protects against weather and adds a great custom look. Available for early & late style threaded gas tank filler bungs.

<u>EARLY STYLE THREADED CAPS, 82'-96' MODELS</u>

21-441 Chrome gas cap w/cover, vented & 2 keys. SOLD EACH

<u>LATE STYLE THREADED CAPS, 96'-07' MODELS</u>

21-443 Chrome gas cap w/cover, vented & 2 keys. SOLD EACH
21-444 Chrome gas cap w/cover, non-vented & 2 keys.



D. *POP-UP GAS CAPS*

21-55 For 1982 thru 1995. SOLD AS PAIR
21-56 For 1996 thru 2003.



8

E. *LATE MODEL POP-UP GAS CAPS*

2.36" OD / 1996-2017

21-550 Chrome Pop-Up Cap '96-'17 Vented (RH)
21-551 Black/Wrinkle Pop-Up Cap '96-'17 Vented (RH)
21-552 Chrome Pop-Up Cap '96-'17 Non Vented(LH)
21-553 Black/Wrinkle Pop-Up Cap '96-'17 Non Vented (LH)

2.75" OD / 1996-2020

21-554 Chrome Pop-Up Cap '96-'20 Vented (RH) 2.75 DIA
21-555 Black/Wrinkle Pop-Up Cap '96-'20 Vented (RH) 2.75 DIA
21-556 Chrome Dummy Cap '96-'20 Vented (LH) 2.75 DIA
21-557 Black Dummy Cap '96-'20 Vented (LH) 2.75 DIA



F. *SUPER PETCOCK & SUPER HORIZONTAL PETCOCK*

U.S.A. MADE, with ball valve and built-in gas line spigot.

21-101 For 1/4" petcock opening with reserve shut off. Includes filter screen. SOLD EACH
21-102 For 1/4" petcock opening. Solves clearance problems.

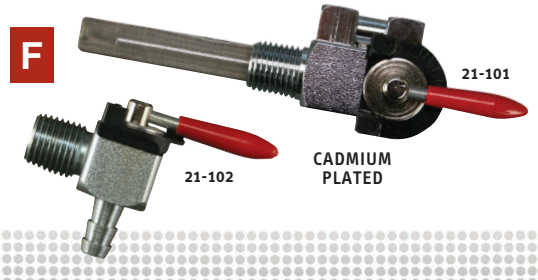

A


21-370


21-371


21-372


21-137

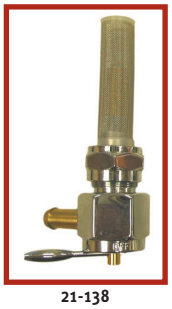
21-138


21-158

B


21-330


21-331


21-332


21-333

8


21-340


21-341


21-342


21-343


21-344


21-345


21-346


21-347

C

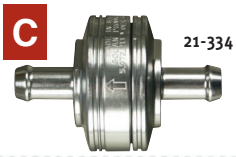
21-334


21-335

A. *HIGH FLOW CUSTOM PETCOCKS*

Chrome plated custom petcocks fit 1975 & later. 3/8" spigot outlet; 13/16" nut.

21-370	Round body, outlet facing right.	SOLD EACH
21-371	Round body, outlet facing down.	
21-372	Round body, outlet facing rear.	
21-137	Hex body, side down outlet.	
21-138	Hex body, front outlet.	
21-158	Hex body, rear outlet.	

GOLAN PRODUCTS

Golan Products present to you our USA made, high performance, second genration and "NEW TECHNOLOGY" petcock.

Our petcock is made out of 360 brass, and stainless steel ball bearing and components.

Our Ball Bearing mechanism prevents frozen valve, providing a secure seal in "OFF" position, and our O-Ring seat secures any leak from Petcock to carburetor, and gives you the feeling of ridgid and positive action.

This new petcock can easily be modifed for use in low and shallow tanks, without any problem, petcock can be mounted in the very end of tank or any other desired location on the tank.

Large distance in positioning between "ON" and "RESERVE"(180 Degree, stop to stop) for safe operation.

Positioning handle has firm movement to prevent accidental shifting from vibration, also, this petcock is easily rebuildable.

Our Petcocks carry a limited lifetime warranty.

B. *PETCOCKS*

21-330	Click-slick petcock with side outlet, chrome.	SOLD EACH
21-331	Click-slick petcock with downward facing outlet, chrome.	
21-332	Click-slick petcock with forward facing outlet, chrome.	
21-333	Click-slick petcock with backward facing outlet, chrome.	
21-340	Click-slick petcock with side outlet, black.	
21-341	Click-slick petcock with downward facing outlet, black.	
21-342	Click-slick petcock with forward facing outlet, black.	
21-343	Click-slick petcock with backward facing outlet, black.	
21-344	Click-slick petcock with side outlet, brass.	
21-345	Click-slick petcock with downward facing outlet, brass.	
21-346	Click-slick petcock with forward facing outlet, brass.	
21-347	Click-slick petcock with backward facing outlet, brass.	

C. *COMPACT STAINLESS STEEL FUEL FILTERS*

This is the best insurance you can buy to keep fuel contamination from reaching that expensive motor. These **U.S.A. MADE** compact fuel filters have a total of 4 square inches of effective aerospace quality 10 micron 304 stainless steel filtration area. The CNC aluminum filter bodies are show chrome plated.

21-334	Super Mini filter with 5/16" barb. Indefinitely reusable. Filter body is .875" long.	SOLD EACH
21-335	Mini Filter with 5/16' barb. Maximum fuel flow with no restriction.	

A. *PETCOCK FOR SPORTSTER®*

With reserve shut off, built in gas line spigot and filter screen. OEM 62125-55.

21-23 For 3/8" petcock opening in any style gas tank. SOLD EACH
21-262 Replacement filter, 1-3/4" long. Replaces OEM 62096-69.

B. *PETCOCK VACUUM VALVE BY-PASS KIT*

Ever been going down the road and your bike sputters and quits, leaving you in the middle of nowhere? It happens when your diaphragm on your petcock ruptures. Now you can forget about it! Install the bypass kit — no more diaphragm. Comes with instructions and all necessary parts.

21-10 Fits all H-D® models equipped with late diaphragm petcock. SOLD EACH

C. *OEM STYLE PETCOCKS*

These H-D® new style petcocks are engineered without O-rings to insure against gas leakage while providing maximum flow. Has filter screen and a reserve. Fits H-D® 1975 & later and custom gas tanks with external 13/16" NPT. OEM 62163-75.

21-106 With straight outlet. SOLD EACH
21-134 With 90° outlet.
21-261 Replacement filter, short. Replaces OEM 62162-75.

Same features as petcocks 21-106 & 21-134, except fits H-D® tanks thru 1974 and custom gas tanks with internal 3/8" NPT connection. OEM 62125-55B.

21-160 With straight outlet. SOLD EACH
21-141 With 90° outlet.
21-262 Replacement filter, 1-3/4" long. Replaces OEM 62096-69.

Chrome reproduction of 1975 thru 1992 OEM gas valve. Complete with chrome 13/16" nut and nylon mesh filter screen.

21-251 Straight down outlet petcock. OEM 62129-75T. SOLD EACH
21-252 Left side outlet petcock.
21-253 Right side outlet petcock.
21-261 Replacement filter, short. Replaces OEM 62162-75.

IMPORTANT PETCOCK INFORMATION

Petcock openings in our tanks are either 3/8" or 1/4" NATIONAL PIPE THREAD, the same thread used in iron water pipe. The actual size of the hole in the tank is approximately 3/4" for the 3/8" NPT and 1/2" for the 1/4" NPT. Pipe thread is used because the thread is designed to seal against leakage as the petcock is screwed into the tank. It is not possible to screw the petcock all the way in flush with the gas tank.

D. *ALUMINUM FUEL FILTERS*

This is a premium quality hi-strength unit. Its alloy case is impervious to vibration, heat & shock, and its compact size makes it simple to install on practically any bike. The replaceable bronze filter element eliminates the tiny particles of dirt, rust and grit from the fuel that cause clogging & excessive wear. SOLD EACH

21-194 Chrome fuel filter, 1/4".
21-195 Red fuel filter, 1/4".
21-196 Blue fuel filter, 1/4".
21-197 Black fuel filter, 1/4".
21-198 Chrome fuel filter, 5/16".
21-199 Red fuel filter, 5/16".
21-201 Black fuel filter, 5/16".



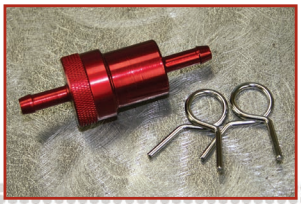





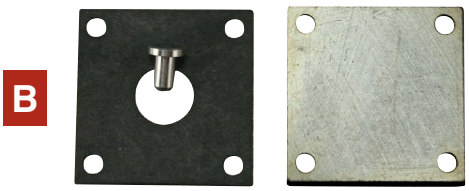

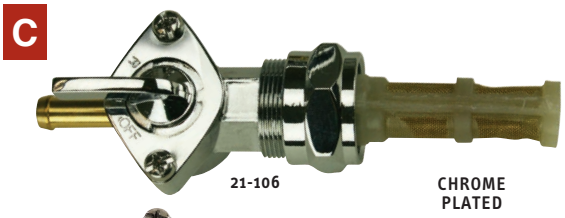

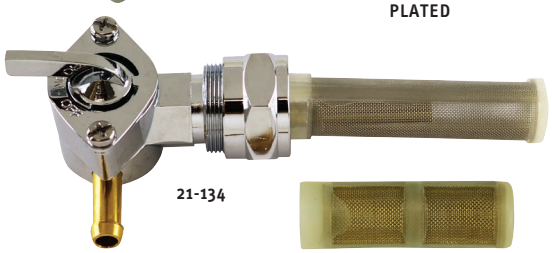

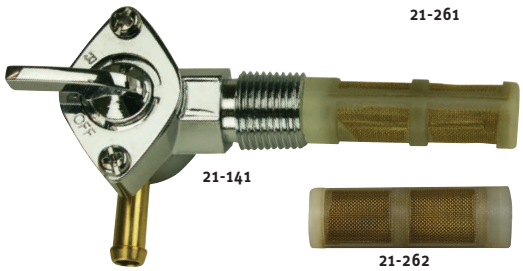

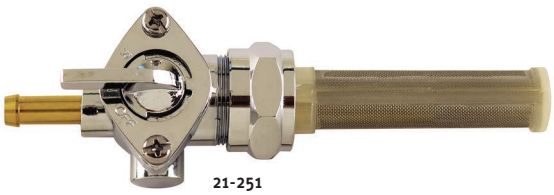

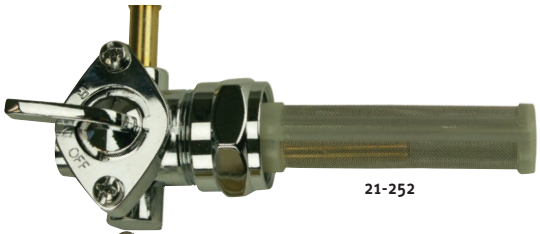

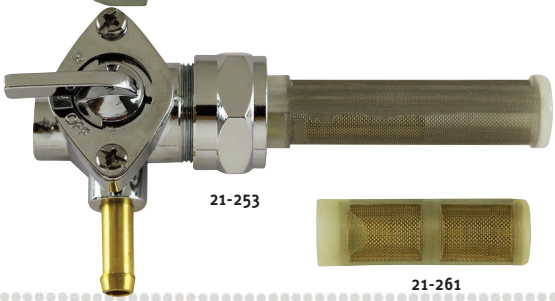

8







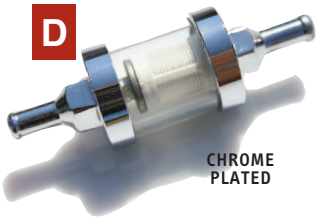











8

A. *VINYL GAS LINE*

Open mesh nylon braiding has been incorporated within walls of clear vinyl, producing a pliable tubing which will not shrink or harden. Excellent for both fuel and oil lines, this rugged tubing will withstand high temperatures and pressures up to 750 psi. Highly resistant to gas, oil, and custom blended fuels.

79-10	1/4" I.D. Vinyl gas line.	25 FT. ROLL
79-11	5/16" I.D. Vinyl gas line.	

B. *REINFORCED BLACK RUBBER FUEL & OIL LINE*

79-12	1/4" I.D., sold by the 25' roll.	SOLD EACH
79-13	5/16" I.D., sold by the 25' roll.	
79-14	3/8" I.D., sold by the 25' roll.	

C. *CHROME BILLET FUEL FILTERS*

Chrome billet peak flow fuel filters with 304 S.S. filter element.

21-203	Chrome billet fuel filter for 3/8" fuel line.	SOLD EACH
21-204	Chrome billet fuel filter for 5/16" fuel line.	

D. *VIEW-THRU FUEL FILTER*

Aircraft type with life long washable filter. 1-1/4" Diameter x 2" long. Pyrex glass body.

21-177	View-thru filter for 1/4" fuel line.	SOLD EACH
21-178	View-thru filter for 5/16" fuel line.	SOLD EACH
21-615	View-thru filter for 3/8" fuel line.	SOLD EACH
21-68	Replacement filter kit for above fuel filters.	SOLD AS KIT

E. *VIEW-THRU FUEL FILTER KIT*

This fuel filter is fully serviceable & has a removable filter screen which makes cleaning easy. The multi fitting kit makes installation trouble free. Kit has 3 different size fittings included which can be used as required, 1/4", 5/16" & 3/8" fuel line fittings.

21-616	Short chrome filter with multi black hose fitting kit.	SOLD AS KIT

F. *FUEL LINE CLAMP*

This is a screw type clamp.

21-1	For use with all sizes of our fuel and oil line. Fits 7/32" thru 5/8".	SOLD EACH

G. *FUEL/OIL LINE SEPARATOR*

Chrome plated die cast separator for routing gas lines, oil lines and 3/8" or 5/16" I.D. stainless steel braided lines.

21-265	Separator.	SOLD EACH

H. *1/4" MOTOR DRAIN PLUG*

21-21	Plug only.	SOLD EACH

A. *HOSE CRIMP TOOL & CLAMPS*

97-104 Hose band clamp crimp tool. SOLD EACH

66-204 11/32" I.D. For chain oiler. OEM 9992. SOLD EACH
66-205 7/16" I.D. For chain oiler. OEM 9996.
66-206 17/32" I.D. For 1/4" fuel line. OEM 10014.
66-207 19/32" I.D. For oil line. OEM 10084.
66-208 11/16" I.D. For oil line. OEM 10020A.
66-209 13/16" I.D. For oil line. OEM 10086.

BUY CLAMPS AT QTY. 25 OR 50 FOR BEST PRICE

A



66-208



97-104

B. *FUEL LINE "T" JUNCTION*

Nylon, super strong, ultra-light construction. Large flow capacity.

21-9 Comes with two size grip rings to fit all sizes from 3/16" to 7/16" fuel line. SOLD EACH

B

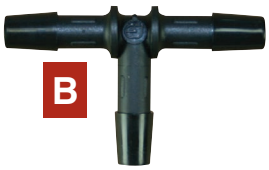

C

CHROME PLATED



C. *GAS TANK SHUT-OFF VALVE EXTENSION KNOB*

Duplicate of the original H-D® accessory. The installation of this accessory allows easier operation of the shut-off valve.

21-133 Fits 1940 thru 1965 H-D® gas tanks. SOLD EACH

D

CHROME PLATED



E

CHROME PLATED



D. *DASH PANEL FOR FAT BOB® WITH SUPER GLIDE® DASH*

Use on late models FX and Low Riders®.

89-169 Chrome plated dash panel. SOLD EACH

E. *DASH PANEL FOR FAT BOB® STYLE GAS TANKS WITHOUT A DASH*

Use on Fat Bob® gas tank when stock dash cover is not used.

89-145 Chrome plated dash panel. SOLD EACH

CHROME PLATED



F

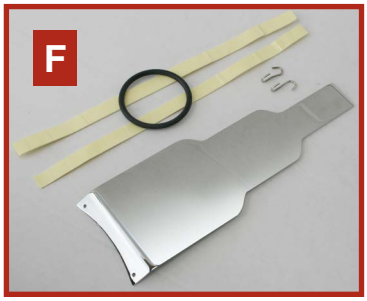

F. *DASH PANEL FOR FAT BOB® STYLE GAS TANKS WITH FLH DASH*

Perfectly chromed and formed dash panel covers the gap between Fat Bob® tanks.

89-116 Plain. SOLD EACH
89-191 Engraved.

G. *FUEL PUMP DOOR GASKETS*

77-920 Fuel pump door gasket (cork) OEM 61326-95
77-921 Fuel pump door gasket (Viton) OEM 61381-02
77-922 Fuel pump door gasket (Viton) OEM 61402-02
77-923 Fuel pump door gasket, OEM 61402-08
77-924 Fuel pump door gasket, OEM 75301-07
77-925 Fuel pump door gasket, OEM 75245-04A
77-926 Fuel pump door gasket, OEM 75248-04
77-927 Fuel pump door gasket, OEM 75249-04A

G

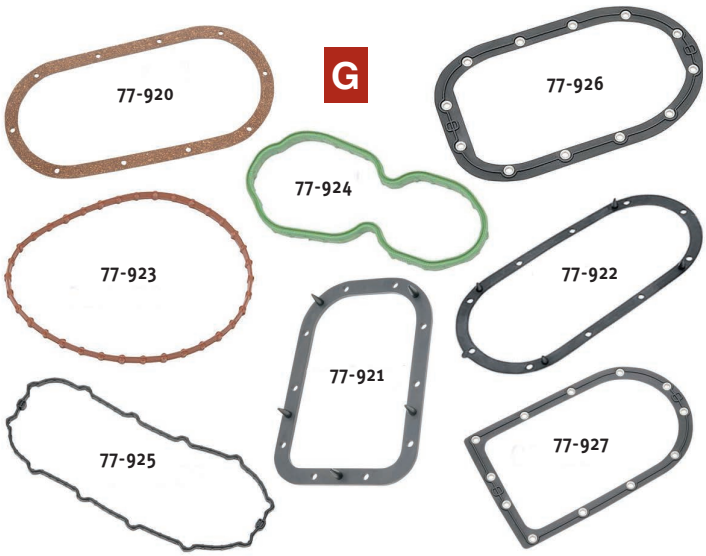

8

A CHROME



A. *CUSTOM FAT BOB® STYLE DASH COVER*

Chrome, molded, full length dash cover with black highlighted recessed ribs. Comes complete with black rubber trim, odometer reset knob and mounting hardware.

89-398 Fits all two piece Fat Bob® tanks with large FL style speedometers. SOLD EACH

B



39-485

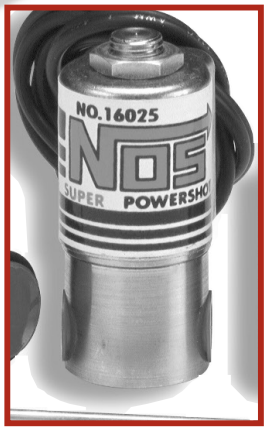

B. *NOS FOGGER™ NIRTOUS SYSTEMS FOR V-TWIN H-D®*

NOZZLES AND ACCESSORIES

39-485 Waterproof remote nitrous push button. SOLD EACH

REPLACEMENT BOTTLES AND COMPONENTS

39-499 Mini Hi-Flo™ for 10 oz. 5/8" bottles. SOLD EACH
39-500 10 oz. - 2.5 lb. Bottle valve handwheel.Black. SOLD EACH
39-505 O-Ring for 10 oz. bottle (5/8"). SOLD EACH
39-508 Steel fuel filter, 1/8" NPT x 5/16" barb end. SOLD EACH

JETS

Precision SS™ jets are stainless steel, 100% flow tested.

39-516 .016 Funnel jet. SOLD EACH
39-517 .018 Funnel jet.
39-518 .020 Funnel jet.
39-519 .022 Funnel jet.
39-520 .024 Funnel jet.
39-521 .026 Funnel jet.

8

BRACKETS



JETS



A. *DYNATEK FUEL INJECTION CONTROLLER*

The new Dyna Fuel Injection Controller is a plug in module that offers 3 user selectable base fuel curves that are designed to improve engine operation and can be modified to suit a wide variety of modifications. These adjustments are made via 3 potentiometers that adjust the fuel curve in the proper ranges for the application. Fuel mixture can be enriched or leaned as required. The Dyna FI Controller uses the factory connectors for easy installation and there is no PC required for tuning or adjusting the fuel curves. There are no modifications to the stock ECU and removing the Dyna FI controller returns the vehicle to the factory configuration.

53-685 1997-1998 Harley-Davidson Touring models with Evo engine.

53-686 1999-2001 Harley-Davidson Twin Cam® Touring models.

A



B. *STANDARD MOTOR PRODUCTS FUEL INJECTORS AND SENSORS*

39-132 Air temperature sensor, OE#27270-95. SOLD EACH
Fits all H-D models with EFI from 95'-05', except V-Rod.

39-133 Fuel pressure regulator, OE#27219-95.
Direct replacement for all FLT's with EFI from 95'-01'.

39-134 Fuel pressure regulator. Upgrade from the stock 3 bar regulator to this 3.5 bar regulator. Replaces OE# 27219-95.

39-128 Fuel injector, Delphi replacement. OE#27609-01.
Used on all late model Harleys with EFI, except V-Rod.

39-131 High flow Delphi replacement injector for Harleys with EFI. Replaces OE#27609-01.

39-126 MAP sensor, OE#32424-95.
Direct replacement on all 95'-98' Harley bikes w/EFI.

39-137 MAP sensor, Delpi. OE#32316-99. Used on all late model Harleys featuring the Delphi EFI system.

39-138 Throttle position sensor. OE#27629-01. Used on all late model Harleys featuring the Delphi EFI system, except V-Rod.

39-139 Engine temperature sensor. OE#32446-99. Used on all late model Harleys with EFI, except V-Rod.

39-141 Throttle position sensor. OE#27659-06. Used on 2006-2008 Dyna® & Softail®, and 2007-2008 Touring®

39-142 Idle Air Control Motor Assembly. OE#27658-06. Used on 2006-2008 Dyna® & Softail®, and 2006-2007 Touring®

B



39-132


39-133

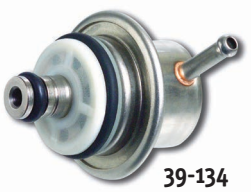
39-134


39-128


39-131


39-126


39-137



39-138


39-139


39-141


39-142

8

A. *DAYTONA TWIN TEC TWIN TUNER 2 FUEL INJECTION CONTROLLER*

A



- Has all the features of the original Twin Tuner and includes ignition timing control capability.
- Can use your Dynojet Power Commander maps.

NOT LEGAL FOR SALE OR USE in the State of California

53-270 Twin Tuner 2 fuel injection & ignition controller, for 2001-2011 Twin Cam® 88 with 36 pin Delphi system.

53-271 Twin Tuner 2 fuel injection & ignition controller, for 2008-2012 Twin Cam® touring models with 73 pin Delphi system.

B. *TCFI 4 FUEL INJECTION CONTROLLER*

B



Features

- Simultaneously auto-tune fuel curves for front and rear cylinders under actual riding conditions with new WEGO IIID dual channel wide-band oxygen sensor interface
- Fully programmable plug-in replacement for 36 pin Delphi® controller. Not compatible with 2008-2012 touring models with electronic throttle control, or 2011-2012 Softail® and 2012 Dyna® models with CAN data bus.
- Robust alpha-N fuel control eliminates problems with long duration/high overlap camshafts
- Powerful Windows software for custom programming and data analysis
    - Full support for J1850 data bus used for communications with turn signal security module (TSM/TSSM) and instrument cluster on 2004-2012 models.
    - Supports for new 6th gear indicator on 2007-2012 models.
    - Supports all sensors including theft/security module.

NOT LEGAL FOR SALE OR USE in the State of California

53-426 Fits 2001-2011 Twin Cam® using 36 pin Delphi System with J1850 data bus. Not compatible with 2008-2012 touring models or 2011-2012 Softails®.

C. *TCFI 6 FUEL INJECTION CONTROLLER*

C



Features

- Fully programmable plug-in replacement for the 73 pin controller with J1850 data bus used on 2008-2013 touring models with electronic throttle controller.
- Offers real-time and continuous auto-tuning with monitoring, control and override
- Built in extended data logging that helps you diagnose real world problems. Data FLASH memory stores full 60 minutes of operating data at 10 samples/second.
- Two programmable user inputs for functions such as two stage RPM limiter, nitrous retard, and shift kill.
- Two programmable user outputs for functions such as shift light, nitrous activation, and electric shifter.
- Easy to install. Just replace stock ECM and 02 sensors and follow the detailed instructions.

NOT LEGAL FOR SALE OR USE in the State of California

53-470 TCFI 6 Fuel Injection Kit for 2008-2013 touring models with J1850 data bus.

A



B

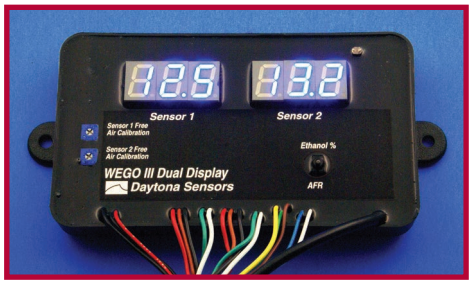

53-471

Features
- Displays Lambda or correct AFR values for any hydrocarbon fuel with a known stoichiometric ratio.
- Versatile tuning aid for all carbureted and fuel injected motors. Displays AFR and logs over 2 hours of data. Including two channels of AFR, engine RPM, and a spare 0-5V analog input for sensors such as throttle position or manifold pressure.

A. *DAYTONA TWIN TEC TWIN TUNER FUEL INJECTION CONTROLLER*

Features
- Allows easy fuel trim adjustments to increase horsepower and throttle response.
- Makes adjustments to match the requirements of performance camshafts, free flowing exhaust, low restriction air filters, etc.
- Easy plug-in installation and setup.

NOT LEGAL FOR SALE OR USE in the State of California

53-238 Twin Tuner fuel injection controller, for 2001-2007 Twin Cam® 88 with Delphi system.

B. *WEGO 3 DUAL DISPLAY WIDE BAND AIR/FUEL RATIO SYSTEM*

- Input for optional customre supplied flex fuel sensor. A switch under the sensor 2 LED allows selection of normal AFR display or 0-100% ethanol display.

NOT LEGAL FOR SALE OR USE in the State of California

53-471 WEGO 3 System with AFR display
53-472 WEGO 3 System with Lambda display

C



D

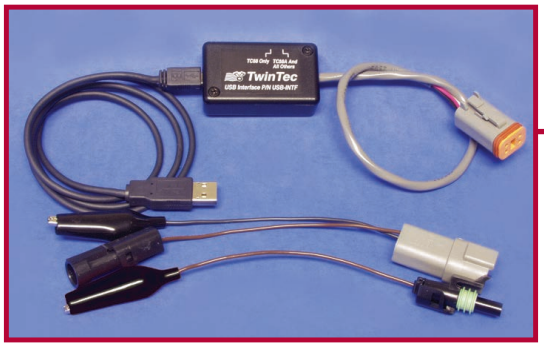

C. *DAYTONA TWIN TEC FUEL INJECTION CONTROLLER*

Features
- Simultaneously auto-tune fuel curves for front and rear cylinders under actual riding conditions with new WEGO IIID dual channel wide-band oxygen sensor interface
- Fully programmable plug-in replacement for Delphi® controller
- Robust alpha-N (throttle position and RPM based) fuel control eliminates problems with long duration/high overlap camshafts
- Full support for SAE J1850 data bus used on 2004-2008 models
- Powerful Windows software for custom programming and data analysis
- Data logging and diagnostics

NOT LEGAL FOR SALE OR USE in the State of California

53-425 TCFI III Fuel Injection Kit, fits 2001-2008 Twin Cam® 88 with Delphi system. Kit includes TCFI III Plug-in fuel injection controller, USB interface for PC link, WEGO IIID Dual Channel wide-band exhaust gas oxygen sensor interface, two Bosch LSU 4.2 wide-band exhaust gas oxygen sensors, and two 18 x 1 .5mm weld nuts for exhaust pipe.

D. *USB INTERFACE FOR ALL DAYTONA TWIN TEC ENGINE CONTROLS*

Features
- Includes all required adapters for Daytona Twin Tec systems 53-226, 53-229, 53-234, 53-235 and 53-425
- Compatible with all Daytona Twin Tec software and Windows 98/ME/XP. Software drivers included on CD ROM.

53-237 USB Interface

STAINLESS STEEL BRAIDED CROSSOVER FUEL LINES

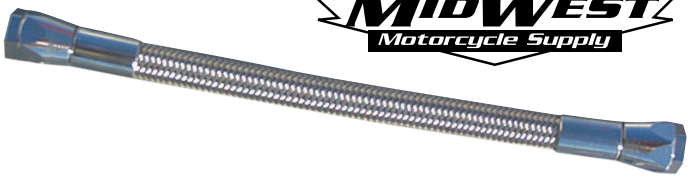

Midwest offers these custom crossover fuel lines. **Midwest crossover fuel line meets D.O.T. specification FMVSS-106 — approved for street use — 50 state legal.** High performance #5 stainless braided hose gives you the custom look you want with the performance feel you demand. Lines incorporate an inner liner and chrome plated fittings. Top quality hose and fittings are attractively packaged to make these parts fly off the shelf. And a budget price tops off the complete program!

71-176 1993 & Later Dyna Glide®. OEM 63690-00A. SOLD AS KIT
71-178 2000 & Later Softail® FXSTD. OEM 63694-00.
71-179 1986 Thru 1999 Softail®. OEM 63696-00A.
71-180 1997 & Later touring models. OEM 63698-02.

FUEL INJECTION LINES

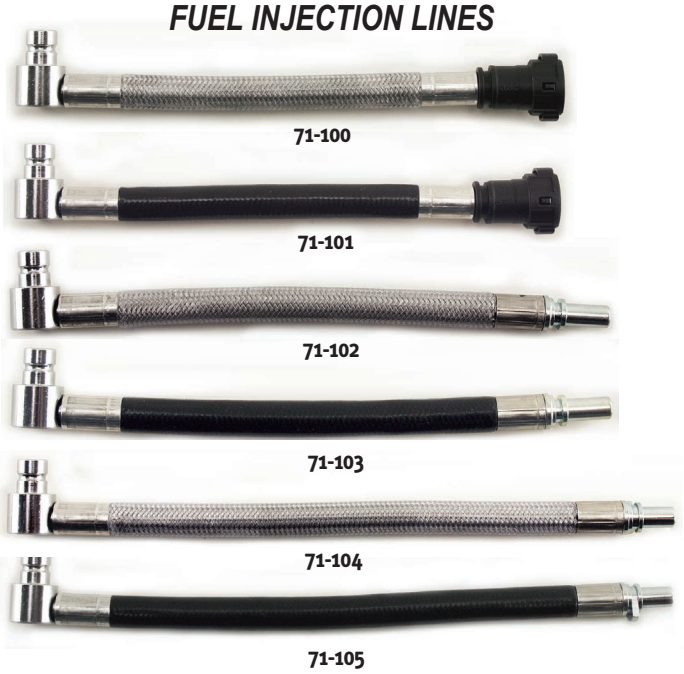

71-100

71-101

71-102

71-103

71-104

71-105

An upgrade over stock kit. Flex lines are clear or black PVC coated stainless steel braided with chrome steel hard line and fittings. All components are resistant to chemicals found in gasoline.

71-100 Fuel line, EFI, Clear, 02-06 Bagger, 01-16 Softail®, 04-16 Dyna®
71-101 Fuel line, EFI, Black, 02-06 Bagger, 01-16 Softail®, 04-16 Dyna®
71-102 Fuel line, EFI, Clear, 08-15 Bagger
71-103 Fuel line, EFI, Black, 08-15 Bagger
71-104 Fuel line, EFI, Clear, 07-16 Sportster®
71-105 Fuel line, EFI, Black, 07-16 Sportster®

ULTIMA® PERFORMANCE CARBURETOR

Ultima®'s performance carburetors are directly interchangeable with S&S® Super G and Super E Carburetors. Ultima® carburetors will accept S&S® jets and S&S® bolt pattern air filter assemblies & manifolds.

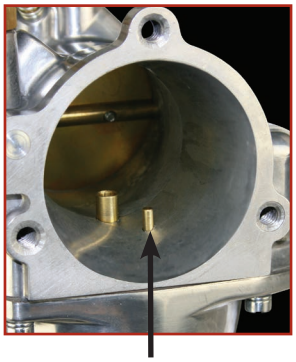

RELOCATED ACCELERATOR PUMP NOZZLE

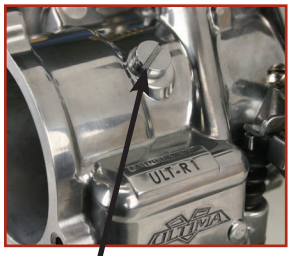

THUNDERJET BOLT ON!



PATENT#D638,857

Patented design improvements - a relocated accelerator pump nozzle for increased throttle response and **THUNDER JETS are a bolt on**! Simply remove the plugs and screw in the Thunder Jet. No expensive machining required! Installation & tuning instructions available online at www.ultimaproducts.com.

NOTE: Not intended for street use. Competition use only.

CARBURETOR ONLY, POLISHED FINISH.

42-91 Ultima® R1, S&S® Super G® Replacement
42-90 Ultima® R2, S&S® Super E® Replacement

Available separately. Flange style intake manifolds for Ultima® motors 1.800" id port runner.

69-141 Ultima® 100/107/113 C.I.
69-142 Ultima® 120/127 C.I.
95-133 1.800" dia. intake to head O-ring seals (2 required)

8



69-141



69-144



69-242



69-94

ULTIMA® FLANGE MOUNT MANIFOLDS

ROUND 1.800 PORT MANIFOLDS

69-141 Fits Ultima® 100/107/113 CI engines for use w/S&S® G, (247 length), & Ultima® R1 carbs.
69-142 Fits Ultima® 120 & 127 CI engines for use w/S&S® G, (259 length), & Ultima® R1 carbs.
69-143 Fits Ultima® 100/107/113 CI engines for use w/S&S® D Carb. (247 length)
69-144 Fits Ultima® 120 & 127 CI engines for use w/S&S® D Carb. (259 length)

EVOLUTION & TWIN CAM® MANIFOLDS

69-96 For 80" Evolution engines 84'-99'. With voes vacuum port only. S&S® E & Ultima® R2 carbs.
69-125 For 80" 84'-99' Evolution & 99'-later Twin Cam® engines . With voes & map sensor vacuum port. S&S® E & Ultima® R2 carbs.

SPORTSTER® MANIFOLDS

69-94 For 86'-03' Sportster®. With voes vacuum port. S&S® E & Ultima® R2 carbs.

SHOVELHEAD MANIFOLDS

69-241 Fits stock height Shovelhead & Ultima® 96" Shovelhead motors. Works with O-ring or band style seals. S&S® E & Ultima® R2 carbs.
69-242 Fits Shovelhead motors. +.200" length cylinders. Works with O-ring or band style seals. S&S® E & Ultima® R2 carbs.

ULTIMA® COMPLETE CARBURETOR KITS

By combining a sleek "free flow" air cleaner assembly with an Ultima® reusable, high flo surgical cotton air filter & performance carburetor, the new Ultima® Complete carb kits are an easy choice for maximum horsepower at minimal cost. These all new complete carb kits include everything needed to install our performance carburetors & air cleaner assemblies onto your motor of choice. Extra jets have been included for additional adjustability right out of the box.





42-143



ULTIMA® 4" MOTORS, 100 CI, 107 CI, 113 CI
42-121 Complete R1 carb kit. SOLD AS KIT

ULTIMA® 4.25" MOTORS, 120 CI, 127 CI
42-122 Complete R1 carb kit. SOLD AS KIT

B.T. EVO MOTORS 1984-LATER
42-126 Complete R2 carb kit, w/voes manifold vacuum port. SOLD AS KIT
42-129 Complete R2 carb kit, w/voes manifold vacuum & map ports. SOLD AS KIT

TWIN CAM® MOTORS
42-130 Complete R2 carb kit, w/voes manifold vacuum & map ports. SOLD AS KIT

SHOVELHEAD MOTORS W/STOCK HEIGHT CYLINDERS
42-127 Complete R2 carb kit. O-ring style. SOLD AS KIT
42-128 Complete R2 carb kit. Band style. SOLD AS KIT

XL SPORTSTER® MOTORS, 1991-2003 CARBURETED MODELS
42-143 Complete R2 carb kit, w/voes manifold vacuum port. SOLD AS KIT

NOTE: Ultima® carb kits not intended for street use.

8

ULTIMA® CARBURETOR REBUILD KITS

Contains all necessary shafts, bushings, and float bowl gasket, etc. to rebuild the main body of the R1 Ultima® carburetor. Will not work with S&S® carburetors.

39-412 Ultima® R1 Carburetor main body rebuild kit SOLD AS KIT

Contains all necessary parts to rebuild the accelerator pump on Ultima® R1/R2 carburetor. Will not work with S&S® carburetors.

39-407 Ultima® R1/R2 Carburetor accelerator pump rebuild kit SOLD AS KIT

INDIVIDUAL REPLACEMENT PARTS

39-405	Float bowl	SOLD EACH
39-406	Float	SOLD EACH
39-431	Idle mixture screw	SOLD EACH
39-432	Idle mixture spring	SOLD EACH
39-434	Float bowl gasket	SOLD EACH
39-435	Needle & seat assembly	SOLD EACH

NOTE: Order **39-412** Main body kit, **39-407** Accelerator Pump kit and **39-435** needle and seat for complete rebuild.

ULTIMA® CARBURETOR JETS (FOR ULTIMA® & S&S® CARBS)

Ultima® carburetor jets are meant for use with Ultima® R1/R2 carburetors & S&S® carburetors when adjusting fuel delivery. SOLD EACH

MAIN JETS

39-15	.048	jet	**39-10**	.070	jet
39-13	.050	jet	**39-11**	.072	jet
39-14	.052	jet	**39-12**	.074	jet
39-16	.054	jet	**39-376**	.076	jet
39-371	.056	jet	**39-377**	.078	jet
39-372	.058	jet	**39-378**	.080	jet
39-373	.060	jet	**39-379**	.082	jet
39-374	.063	jet	**39-380**	.084	jet
39-8	.064	jet	**39-381**	.086	jet
39-9	.066	jet	**39-382**	.088	jet
39-375	.068	jet	**39-383**	.090	jet

INTERMEDIATE JETS

39-362	.025	jet
39-401	.0265	jet
39-363	.028	jet
39-370	.0295	jet
39-6	.031	jet
39-402	.032	jet
39-7	.033	jet
39-403	.036	jet
39-404	.040	jet

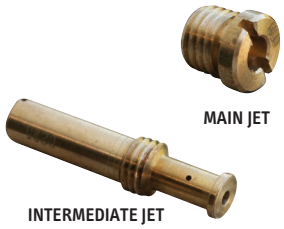









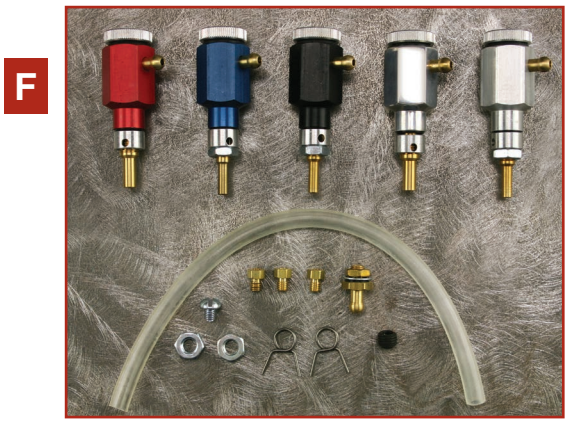

A. *ULTIMA® THROTTLE CABLE BRACKET*

Ultima® throttle cable brackets are offered in two popular applications for use with Ultima® & S&S® carburetors. Mounting screw included.

42-190	Bracket, short 1936-1989	SOLD EACH
42-191	Bracket, tall 1990-later	SOLD EACH

B. *ULTIMA® CARBURETOR ENRICHENER*

The Ultima® Carb Enrichener is a direct replacement for the stock enrichener assembly. This stand-alone enrichener is typically used when mounting air cleaners other than the stock Ultima® air cleaner. Stepped design allows for partial enrichening when not as much fuel is needed to warm up/start your engine. **Meant for use with Ultima® R1 & R2 carburetors only.** Will not work on S&S® carburetors.

42-89	Ultima® Carburetor Enrichener	SOLD EACH

C. *ULTIMA® INSULATOR BLOCKS*

The Ultima® insulator blocks can be used with Ultima® R1, R2 & S&S® Super E® & Super G® carburetors.

78-112	Ultima® Insulator block, Ultima® R1 & S&S® Super G®, .255" thick.	SOLD EACH
78-113	Ultima® Insulator block, Ultima® R2 & S&S® Super E®, .255" thick.	SOLD EACH

D. *ULTIMA® CARB GASKET*

The Ultima® carburetor gaskets can be used with Ultima® R1, R2 & S&S® Super E® & Super G® carburetors. Installs between carburetor & air cleaner assembly.

78-600	Ultima® Carb Gasket, Ultima® R1, R2, S&S® Super E® & S&S® Super G®	SOLD EACH

E. *ULTIMA® CARB SPACER*

The Ultima® carburetor spacer can be used with Ultima® R1, R2 & S&S® Super E® & Super G® carburetors. Installs between carburetor & air cleaner assembly, when additional spacing is required. .255" thick billet aluminum.

42-99	Ultima® Carb Spacer, Ultima® R1, R2, S&S® Super E® & S&S® Super G®	SOLD EACH

F. *THUNDERJETS*

The ThunderJet is a jetable, externally mounted third fuel circuit that improves the performance of 2 circuit carbs such as the Ultima®, S&S®, Keihin and Bendix. ThunderJet kits come with complete installation & tuning instructions and extra jets. Fits butterfly-type, Ultima®, CV, Keihin and Bendix carbs, and all models of S&S® carburetors. Some machining to the carb bowl and body is required.

For Ultima® R-1

39-424	Red Thunderjet.	SOLD AS KIT
39-425	Blue Thunderjet.	
39-426	Black Thunderjet.	
39-428	Polished Alum. Thunderjet.	

For Ultima® R-2

39-409	Red Thunderjet.	SOLD AS KIT
39-410	Blue Thunderjet.	
39-411	Black Thunderjet.	
39-418	Satin Alum. Thunderjet.	

ULTIMA® AIR CLEANER ASSEMBLIES

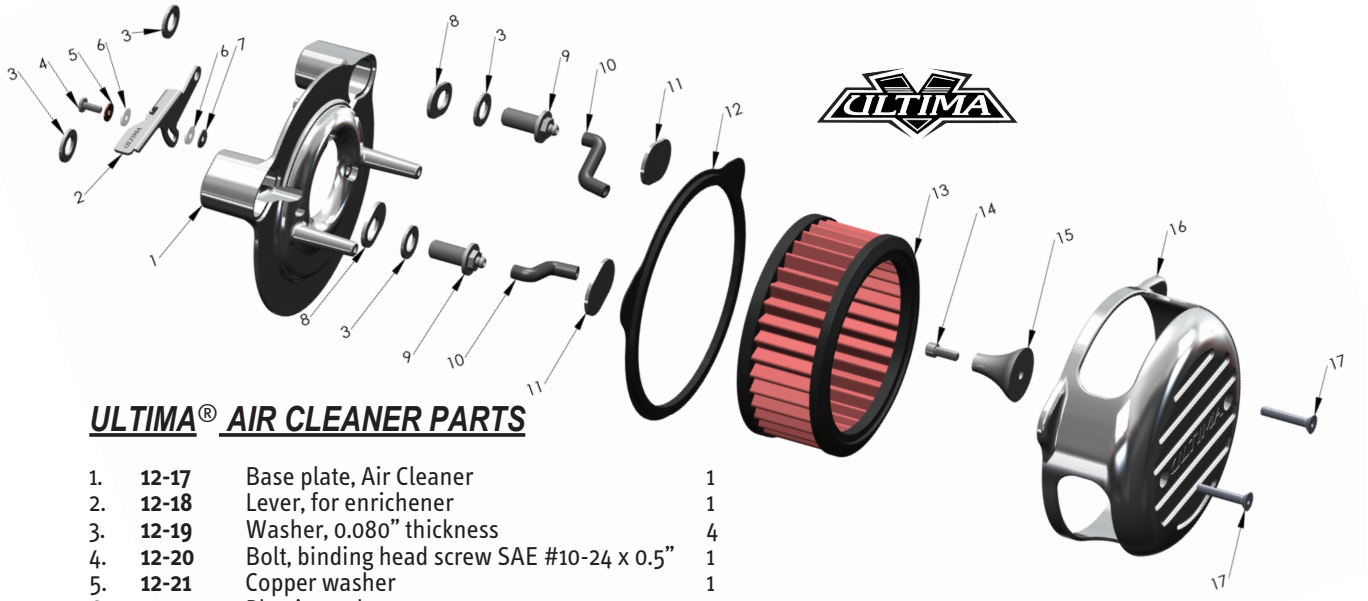

ULTIMA® AIR CLEANER PARTS

1.	**12-17**	Base plate, Air Cleaner	1
2.	**12-18**	Lever, for enrichener	1
3.	**12-19**	Washer, 0.080" thickness	4
4.	**12-20**	Bolt, binding head screw SAE #10-24 x 0.5"	1
5.	**12-21**	Copper washer	1
6.	**12-22**	Plastic washer	2
7.	**12-23**	Spring washer	1
8.	**12-24**	Eliptical washer	2
9.	**12-25**	Breather bolt	2
10.	**12-118**	Breather hose	2
11.	**12-26**	Breather cover, aluminum plate	2
12.	**12-27**	Rubber seal	1
13.	**12-361**	Air filter	1
14.	**12-28**	Bolt, SHCS SAE 1/4"-20 x 0.625"	1
15.	**12-29**	Air Director	1
16.	—	Air Cleaner Cover (5 different versions)	1
17.	**12-16**	Bolts, SCHCS SAE 1/4-20 x 1.25"	2



AIR CLEANER ASSEMBLY

Ultima® air cleaners are designed to match the looks and performance of our "R" series carburetors. The adjustable breather bolt spacing allows for mounting on various motor sizes when using our carb. These kits can also be used in place of S&S® air cleaner assemblies.

FREE FLOW MILLED

12-15 Ultima® Air Cleaner Kit, chrome
12-14 Ultima® Air Cleaner Kit, polished

FREE FLOW MILLED "NO LOGO"

12-51 Ultima® Air Cleaner cover, polished
12-52 Ultima® Air Cleaner cover, chrome

FREE FLOW FINNED

12-13 Ultima® Air Cleaner Kit, chrome
12-12 Ultima® Air Cleaner Kit, polished

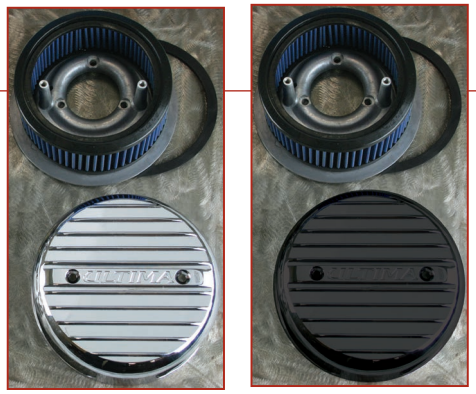

12-40 12-44

ULTIMA® SHOVELHEAD AIR CLEANER ASSEMBLY

Ultima® air cleaners are designed to match the looks and performance of our "R" series carburetors. Ultima® enrichener **42-89** is required & available seperately.

FREE FLOW MILLED

12-40 Ultima® Shovelhead Air Cleaner Kit, chrome.
12-44 Ultima® Shovelhead Air Cleaner Kit, black.

ULTIMA® AIR CLEANER ASSEMBLIES

ULTIMA® AIR CLEANER PARTS

1.	**12-152**	Air filter backing plate	1
2.	**12-150A**	Air filter cover, cast finish	1
	12-150	Air filter cover, chrome	
3.	**12-153**	EPA Air Valve	2
4.	**12-154**	Passive Door Clamp and Screw	2
5.	**12-361**	Air Filter	1
6.	**12-156**	Coupling 42, 45, 48	1
7.	**12-157**	.312" Width 3" Dia. Hose Clamp	2
8.	**12-155**	EPA Outer Cover Seal	1
9.	**12-165**	Outer cover mounting screw	3
10.	**12-161**	Hose Fitting kit	2
11.	**42-120**	140 CI backing plate adapter (for 130 & 140 CI engines only)	

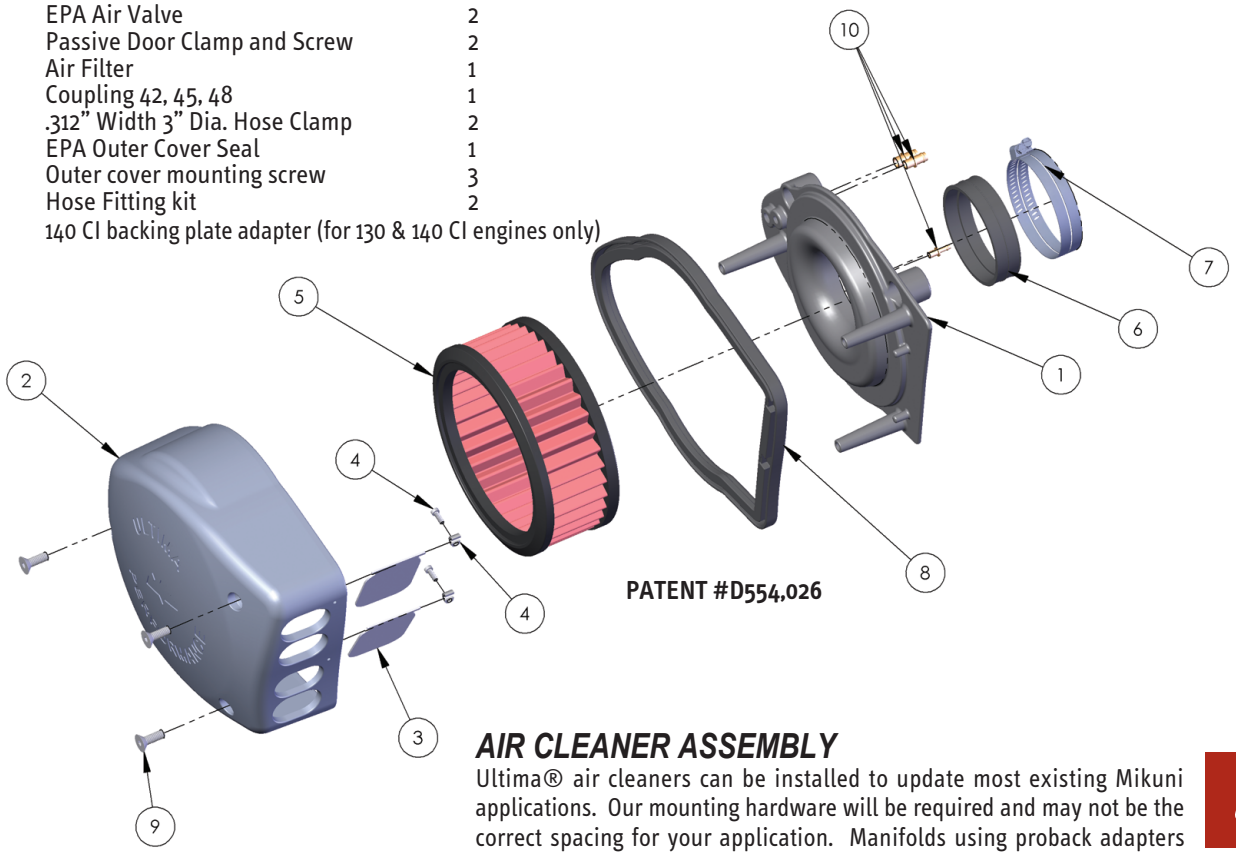

PATENT #D554,026

AIR CLEANER ASSEMBLY

Ultima® air cleaners can be installed to update most existing Mikuni applications. Our mounting hardware will be required and may not be the correct spacing for your application. Manifolds using proback adapters will set the carburetor out further and additional spacing will be required.



12-170

12-170 CARB approved Ultima® Air Cleaner 42/45/48, chrome.
12-170A CARB approved Ultima® Air Cleaner 42/45/48, cast finish.
12-171 Performance Ultima® Air Cleaner 42/45/48, chrome.
12-171A Performance Ultima® Air Cleaner 42/45/48, cast finish.
12-150 Ultima® Air Cleaner outer cover, chrome.

CARB BACKING PLATE TO HEAD MOUNTING HARDWARE

12-173 Ultima® Air Cleaner TC Head Breather Kit
12-169 Ultima® Air Cleaner EVO 92/99 Head Breather Kit
12-162 Ultima® Air Cleaner EVO 84/91 Mounting Hardware.
42-120 140 CI backing plate adapter (for 140 CI engines only)



12-171



12-150

CARB BACKING PLATE TO HEAD MOUNTING HARDWARE

12-173 Ultima® Air Cleaner TC Head Breather Kit
12-169 Ultima® Air Cleaner EVO 92/99 Head Breather Kit
12-162 Ultima® Air Cleaner EVO 84/91 Mounting Hardware

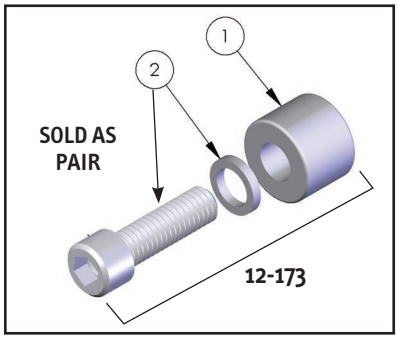

12-173 HARDWARE KIT
1. **12-159** PCV Breather Spacer
2. **12-166** Breather Bolts & Washers

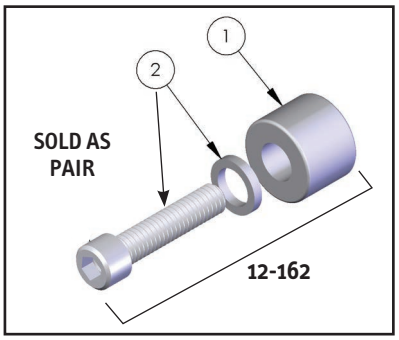

12-162 HARDWARE KIT
1. **12-159** PCV Breather Spacer
2. **12-164** Breather Bolts & Washers

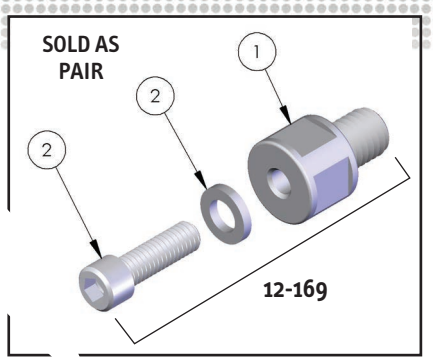

12-169 HARDWARE KIT
1. **12-158** PCV Breather Spacer
2. **12-160** Breather Bolts & Washers

ULTIMA® MIKUNI MANIFOLD EXTENSION PARTS

These parts are designed to help tune your intake length for your engines' specific needs. Most V-Twin engines benefit from larger volume plenum areas. We offer manifolds with spacers designed for our Ultima® air cleaner covers.

BACKING PLATE FASTENERS W/WASHERS
12-160 1/2" & 1" spacer EVO 92'/99'
12-146 1/2" spacer EVO 84'/91'
12-147 1" spacer EVO 84'/91'
12-148 1/2" spacer Twin Cam®
12-149 1" spacer Twin Cam®

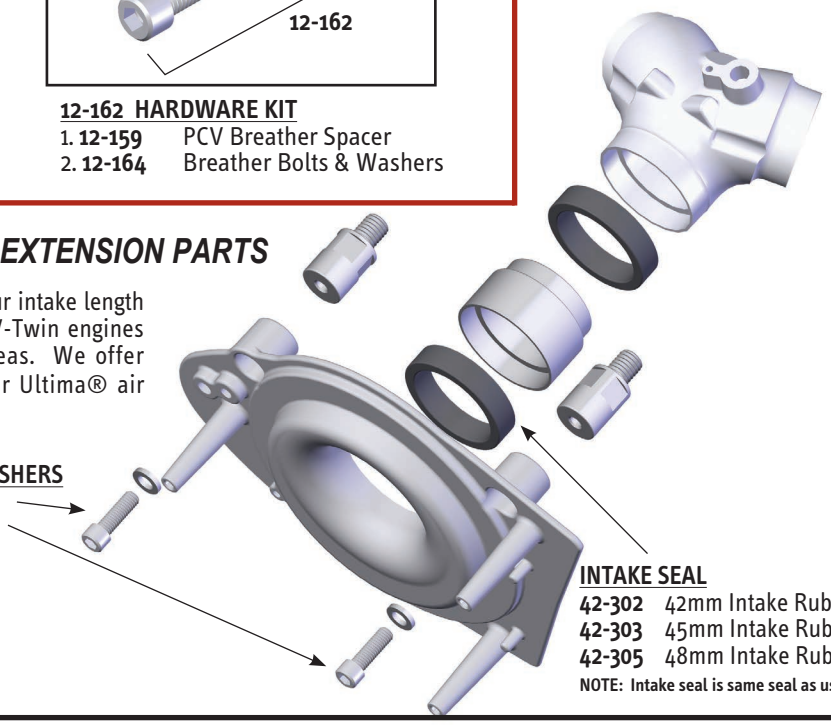

INTAKE SEAL
42-302 42mm Intake Rubber Seal
42-303 45mm Intake Rubber Seal
42-305 48mm Intake Rubber Seal
NOTE: Intake seal is same seal as used w/o spacer.

ULTIMA® MANIFOLD MEASURING INFORMATION

To take the guess work out of intake manifold selection, Ultima® has devised a way to measure an intake manifold that doesn't require added specialty tools, and best of all, its easy. To determine which intake manifold you need, set the manifold on a flat surface on either of the intake ports, then measure from the flat surface up to the shortest point on the other intake port as shown in the following figure. Multiply this measurement by 100 to get the intake manifold number. For instance, if the intake manifold is set on the flat surface, and the measurement to the shortest point on the opposite port is 2.47, then the intake manifold number you will need is a number 247. Measurement to part# cross reference chart can be found on the following page. It is that easy!

PLEASE NOTE:
This system was devised for intake manifold with port O.D.'s of 1.88". Please check the diameter of the intake ports on the manifold you are measuring. If the manifold has a stock O.D. of 1.81", subtract .030" from the measurement taken to get the number for the Ultima® manifold. For instance, if a manifold with a port O.D. of 1.81" is measured using the Ulitma system, and the measurement comes to 2.59", then the Ultima® manifold needed will be 2.56", or a number 256.


MANIFOLD KIT

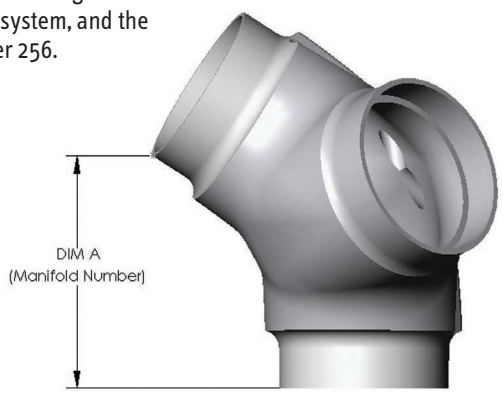

ULTIMA® MANIFOLD PARTS

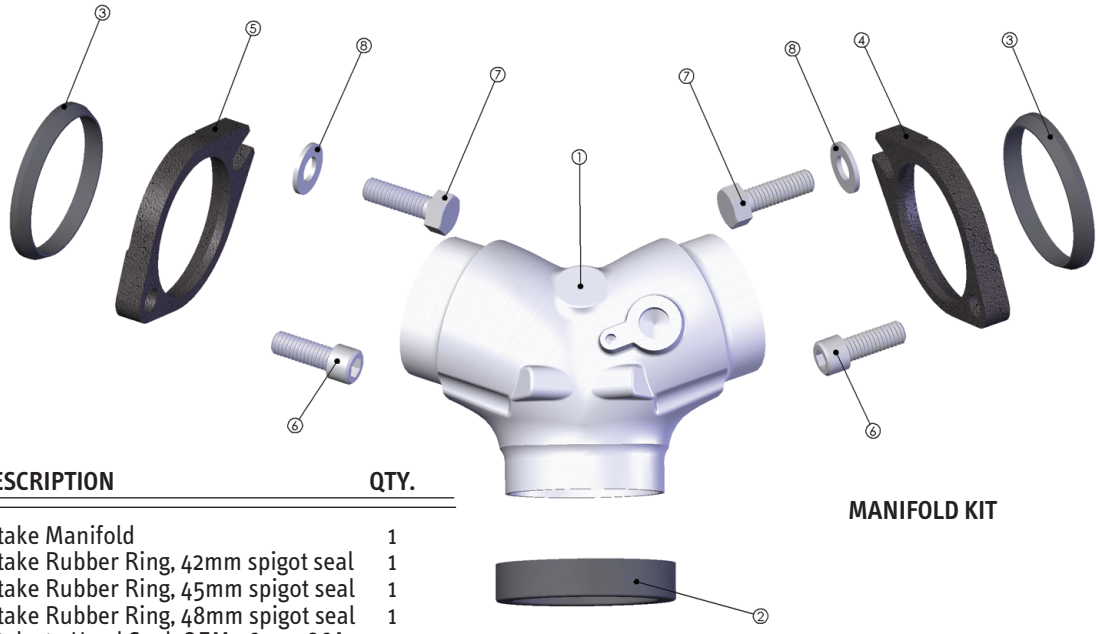

MANIFOLD KIT

PART#	DESCRIPTION	QTY.
1. —	Intake Manifold	1
2. **42-302**	Intake Rubber Ring, 42mm spigot seal	1
42-303	Intake Rubber Ring, 45mm spigot seal	1
42-305	Intake Rubber Ring, 48mm spigot seal	1
3. **95-758**	Intake to Head Seal, OEM 26995-86A	2
95-133	Intake to Head Seal, for 1.800 ID ports all Ultima® cylinder heads, except 140ci	2
4. **69-90**	Intake Flange - Front	1
5. **69-91**	Intake Flange - Rear	1
6. —	HX-SHCS 0.3125 - 18x0.875x0.875-S	2
7. —	HBOLT 0.3125-18x1x0.875-S	2
8. —	FW 0.3125	2

8

ULTIMA® SPIGOT MOUNT MANIFOLDS SELECTION GUIDE

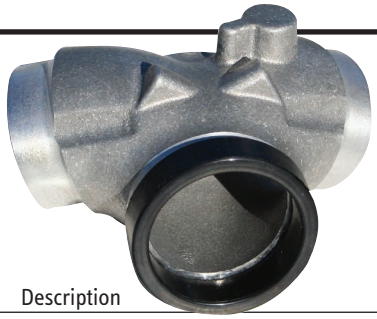

PROGRESSIVE LISTING OF MIKUNI MANIFOLD BY LENGTH

Ultima® Measured Length	Approx S&S® Equivalent	Applications	Description		MANIFOLDS Manifold Nat. Finish Part #	Manifold Polished Part #
42MM MANIFOLDS						
275	405	S&S® 93 & 113 EVO, S&S® 100 Twin Cam®	Manifold 42 Mik #275 1.800 Port		**69-184A**	
45MM MANIFOLDS						
247	373	Ultima® 100, 107 and 113 CI EVO--S&S® 89 XL	Manifold 45 Mik #247 1.800 Port		**69-190A**	**69-190P**
259	386	Ultima® 120, 127 EVO--S&S® 100 " EVO	Manifold 45 Mik #259 1.800 Port		**69-194A**	**69-194P**
266	394	S&S® 107 EVO	Manifold 45 Mik #266 1.800 Port		**69-196A**	
275	405	S&S® 93 & 113 EVO, S&S® 100" Twin Cam®	Manifold 45 Mik #275 1.800 Port		**69-198A**	
284	415	S&S® SSW+ 124 EVO & Twin Cam®	Manifold 45 Mik #284 1.800 Port		**69-204A**	
48MM MANIFOLDS						
256	383	Ultima® 113 TC	Manifold 48 Mik #256 1.800 Port		**69-203A**	
259	386	Ultima® 120, 127 EVO--S&S® 100 " EVO	Manifold 48 Mik #259 1.800 Port		**69-205A**	
275	405	S&S® 93 & 113 EVO, S&S® 100" Twin Cam®	Manifold 48 Mik #275 1.800 Port	**(69-210 KIT)**	**69-210A**	
278*	408	S&S® 117 EVO &TC,-- HD Stock and SE 88,95,103,113 S&S® 88,95,106 Twin Cams®-- Ultima® & S&S® 80,89,96 EVO	Manifold Kit 48 Mik #278 1.800 Port		**69-212A**	
284	415	S&S® SSW+ 124 EVO & Twin Cam®	Manifold Kit 48 Mik #284 1.800 Port		**69-216A**	
48MM OVAL PORT MANIFOLDS						
294	426	Ultima® 130 and 140 CI Engines	Manifold Kit 48 Mik #294 Oval Port		**69-217A**	

NOTE: *STOCK TC & EVO LENGTH

ORIGINAL MIKUNI HSR SERIES CARBURETOR KITS

HSR Carbs use stock H-D® throttle cables. The latest 42/45/48mm smoothbore carbs install quickly using the original stock throttle cables. The HSR flatslide carb delivers excellent throttle response and improved rider control. The smoothbore allows the engine to reach its full power potential, so you accelerate and pass with confidence. You'll get good gas mileage and many years of dependable, carefree performance. These kits cover more models with fewer part numbers. Kits include instructions and hardware for each application.

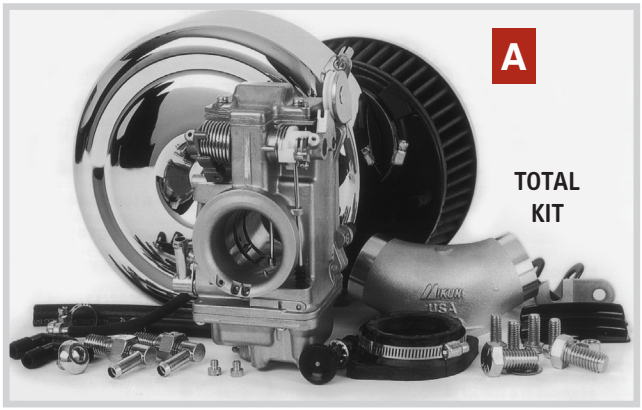

A. *TOTAL KITS*

These Kits are complete with everything needed for a total installation. Kits include an HSR 42mm or 45mm carburetor, new performance manifold, rubber flange, high flow K&N filter, chrome cover, breather kit, and mounting hardware. Stock throttle cables from 1990 & later models can be used. **NOTE:** 1984 thru 1989 Evolution® models will need new cables from a similar 1990 thru 1995 model.

HSR42 KITS

42-153 Fits 1340cc Big Twin Evolution® models 1984 thru 1999. Includes breather kit for 1993 & later models. SOLD AS KIT
NOTE: 1984 thru 1989 models require cables from 1990 thru 1995 models.

42-252 Fits Twin Cam® 88/95 1999 & later. Includes new breather kit for Twin Cams®. **NOTE:** Use your stock throttle cables. SOLD AS KIT



B. *EASY KITS*

These kits are designed to work with your original H-D® intake manifold, choke cable, air cleaner and throttle cables. You can run other high performance air filters designed for the CV type carb by using the special adapter included in the kit. SOLD AS KIT

42-152 Fits Big Twin 1340cc Evolution® models 1990 thru 1999 with stock CV type manifold. Includes 42mm carb, airbox adapter, and chrome cover.

42-156 Fits Big Twin 1990 thru 1999 and Twin Cam® 1999 & later. Includes 42mm carb, airbox adapter and instructions. Evolution® uses Screamin' Eagle® air cleaner, Twin Cam® uses the stock oval cover.



HSR42/45

C. *INDIVIDUAL HSR42/45 CARBURETORS*

For the performance engine builder needing the carburetor only for specific custom applications. Available in standard aluminum finish or the polished version. (Note: Choke cable is included, ecept TM42-6 which will use stock choke cable from CV type carb).

42-422	HSR 42mm Carburetor, standard finish	SOLD EACH
42-423	HSR 42mm Carburetor, polished finish	
42-424	HSR 45mm Carburetor, standard finish	
42-425	HSR 45mm Carburetor, polished finish	
42-527	HSR 48mm Carburetor, standard finish	
42-528	HSR 48mm Carburetor, polished finish	



D. *CRANKCASE HEAD-BREATHER KITS*

For the installation of HSR Carburetor Kits using the Mikuni K&N high flow filter on Big Twins and Twin Cams®.

42-447 To mount HSR42/45 carb and filter to Evo Big Twins, includes the new chrome banjos, vent bolts and brackets. SOLD AS KIT

42-448 To mount HSR42/45 carb and filter to Twin Cam® engine, includes the new chrome banjos, vent bolts and brackets. SOLD AS KIT

A. *CARB REBUILD KITS FOR HSR 42/45/48*

All the necessary parts and gaskets to freshen up an HSR carb.
Includes needle valve assembly, O-rings, gaskets and screws.

42-445 Rebuild kit for HSR42/45 carb w/4.2 needle valve & exploded view instructions. SOLD AS KIT

42-446 Rebuild kit for HSR48 carb w/4.5 needle valve & exploded view instructions. SOLD AS KIT

A



B



B. *O-RINGS FOR HI-FLO CARB BACKING PLATE ADAPTERS*

REPLACEMENT O-RINGS FOR PLATE ADAPTERS

For Part#69-122

69-001 Carb-side o-ring.

C



42-432



42-435



42-433

C. *ORIGINAL MIKUNI OPTIONAL & REPLACEMENT PARTS*

42-426 Short idle screw adjuster (optional). Uses standard spring.
42-427 Long idle cable adjuster (standard). Spring not included.
42-428 Choke cable, enrichener.
42-429 Air box adapter, adapter only for CV carb.
42-431 O-Ring seal for airbox adapter.
42-432 Airbox adapter kit, includes **42-429** (1), **42-430** (3) and **42-431** (1), all in one kit
42-433 Chrome airbox adapter kit, chrome version of **42-432**
42-434 Rubber flange adapter, early 42mm black w/stainless steel clamp.
42-435 Rubber flange adapter, early 45mm black w/stainless steel clamp.
42-436 Rubber flange adapter, 42mm black w/stainless steel clamp.
42-437 Rubber flange adapter, 45mm black w/stainless steel clamp.
42-438 Rubber flange adapter, 48mm black w/stainless steel clamp.
42-439 Intake manifold for HSR42/45 mm, Evo style w/o hole.



42-439

8

D. *MIKUNI ACCESSORIES*

ALL PARTS SOLD EACH

42-440 Intake manifold for HSR42/45 mm, Twim Cam style w/ MAPS hole.
42-441 Air filter, K&N 2.5", standard in kits, washable.
42-442 Air filter, K&N 3.0", high performance, washable.
42-449 Chrome carb top w/o Mikuni logo.

D



42-440



42-442

E. *BENDIX CARBURETOR PARTS*

ALL PARTS SOLD EACH

39-23 THROTTLE STOP SCREW SPRING FOR 38MM (OEM 27613-71)
21-207 1/8 NPT X 1/4 MALE SPIGOT FOR 38MM (OEM 63578-52)
78-111 CARBURETOR BOWL GASKET FOR 38MM (OEM 27646-71)
95-143 RUBBER O-RING FOR MAIN JET FOR 38MM (OEM 27326-71)

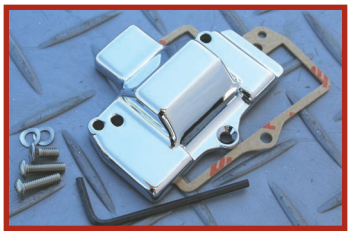

CHROME CARB TOP W/O LOGO

42-449

MIKUNI JETTING PARTS

High speed (main), low speed (pilot) jets, jet needles and accelerator pum p nozzle for the HSR42/45/48 carburetors.

PILOT JETS

42-484	#15 pilot
42-485	#17.5 pilot
42-486	#20 pilot
42-487	#22.5 pilot
42-488	#25 pilot
42-489	#27.5 pilot
42-490	#30 pilot
42-491	#32.5 pilot
42-492	#35 pilot
42-533	#37.5 pilot
42-534	#40 pilot
42-535	#42.5 pilot
42-536	#45 pilot

JET NEEDLES (723 series)

42-514	#Y-2
42-515	#Y-4
42-516	#Y-6
42-517	#Y-8
42-518	#Z-0

MAIN JETS

42-538	#140 main
42-493	#150 main
42-494	#152.5 main
42-495	#155 main
42-496	#157.5 main
42-497	#160 main
42-498	#162.5 main
42-499	#165 main
42-500	#167.5 main
42-501	#170 main
42-502	#172.5 main
42-503	#175 main
42-504	#177.5 main
42-505	#180 main
42-506	#182.5 main
42-507	#185 main
42-508	#187.5 main
42-509	#190 main
42-510	#192.5 main
42-511	#195 main
42-513	#200 main

JET NEEDLES (HSR42)

42-475	#95 richest
42-476	#96 richer
42-477	#97 standard
42-478	#98 leaner

JET NEEDLES (HSR45)

42-479	#95 richest
42-480	#96 richer
42-481	#97 standard
42-482	#98 leaner

JET NEEDLES (HSR48)

42-529	#95 richest
42-530	#96 richer
42-531	#97 standard
42-532	#98 leaner

ACCELERATOR PUMP NOZZLES

42-519	#70 std
42-520	#60
42-521	#50

SOLD EACH

A



B

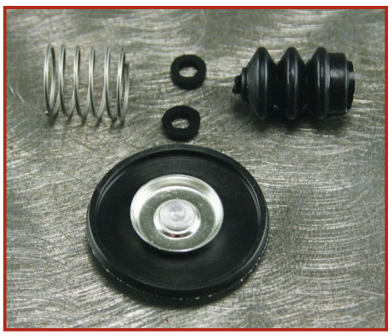

A. REBUILD KITS FOR ZENITH (BENDIX) CARB

39-525 Complete kit for pre-1976 FL, FX & XL. OEM 27132-71. Imported. SOLD AS KIT

B. ACCELERATOR PUMP DIAPHRAGM KIT FOR ALL KEIHIN, LATE CV & S&S® SUPER "E" & "G" CARBURETORS

Diaphragm rebuild kit for "E" and "G" carbs. Includes 2 O-rings, 1 dust boot, 1 diaphragm and 1 spring. Will also replace diaphragm on all Keihin carbs (including late CV carb) 1976 to present on all Big Twin & Sportster® models

39-408 Accelerator pump diaphragm kit. SOLD AS KIT

LINKERT CARBURETOR PARTS for BIG TWINS & 45 C. I. 1933 thru 1965

ALL PARTS SOLD EACH EXCEPT AS NOTED

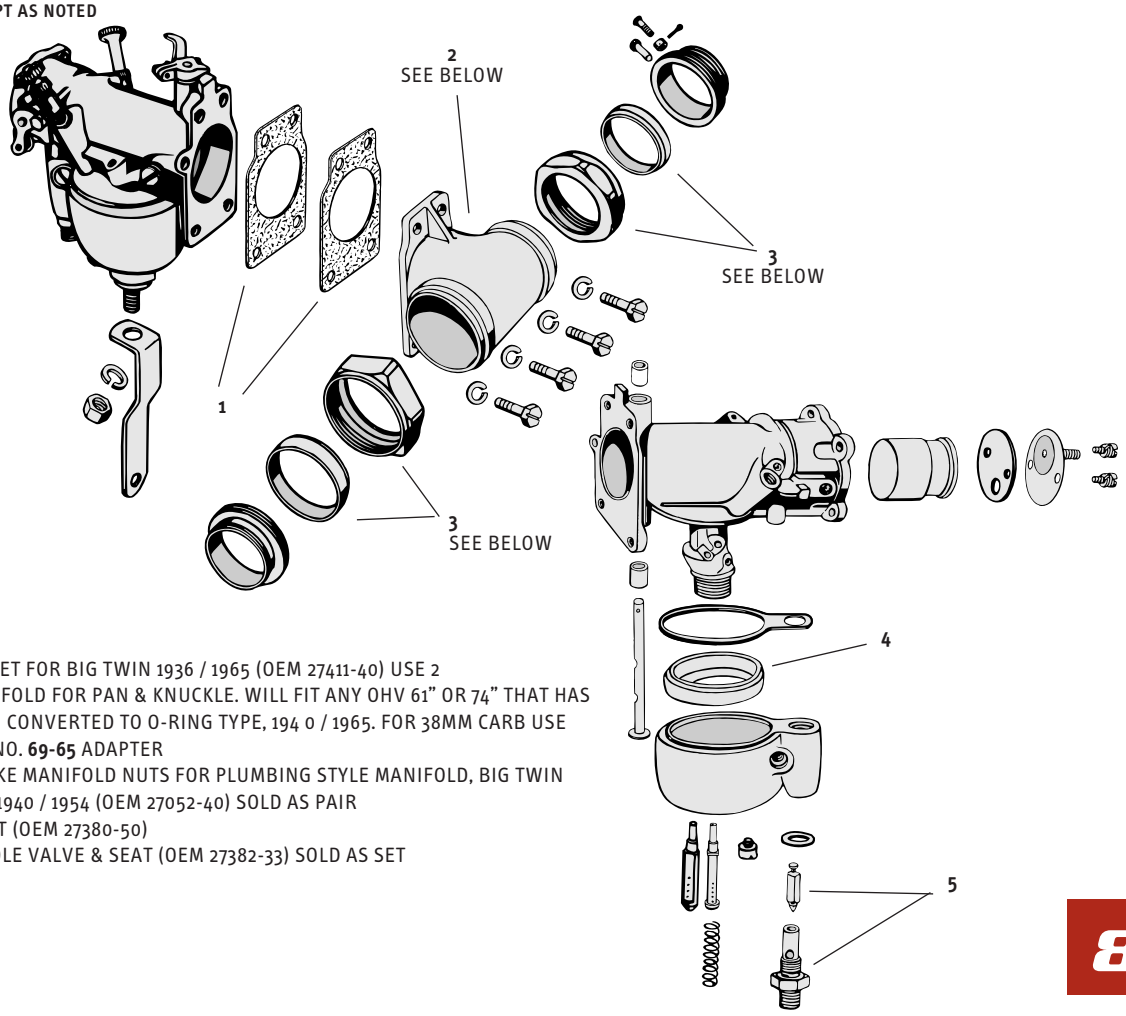

1	**78-408**	GASKET FOR BIG TWIN 1936 / 1965 (OEM 27411-40) USE 2
2	—	MANIFOLD FOR PAN & KNUCKLE. WILL FIT ANY OHV 61" OR 74" THAT HAS BEEN CONVERTED TO O-RING TYPE, 194 0 / 1965. FOR 38MM CARB USE ART NO. **69-65** ADAPTER
3	—	INTAKE MANIFOLD NUTS FOR PLUMBING STYLE MANIFOLD, BIG TWIN OHV 1940 / 1954 (OEM 27052-40) SOLD AS PAIR
4	**39-347**	FLOAT (OEM 27380-50)
5	**39-346**	NEEDLE VALVE & SEAT (OEM 27382-33) SOLD AS SET

8

ALLEN SCREWS FOR S&S® CARBURETORS

Chrome plated. Gardner Wescott.

41-948	For S&S® Super "B" — 7 pieces.	SOLD AS KIT
41-950	For S&S® Super "E" & "G" Shorty — 48 pieces.	
41-951	Air cleaner cover screws with phillips head. Fits all S&S® models — 3 pieces.	
41-952	Air cleaner cover screws with allen head. Fits all S&S® models — 3 pieces.	



41-948



41-950

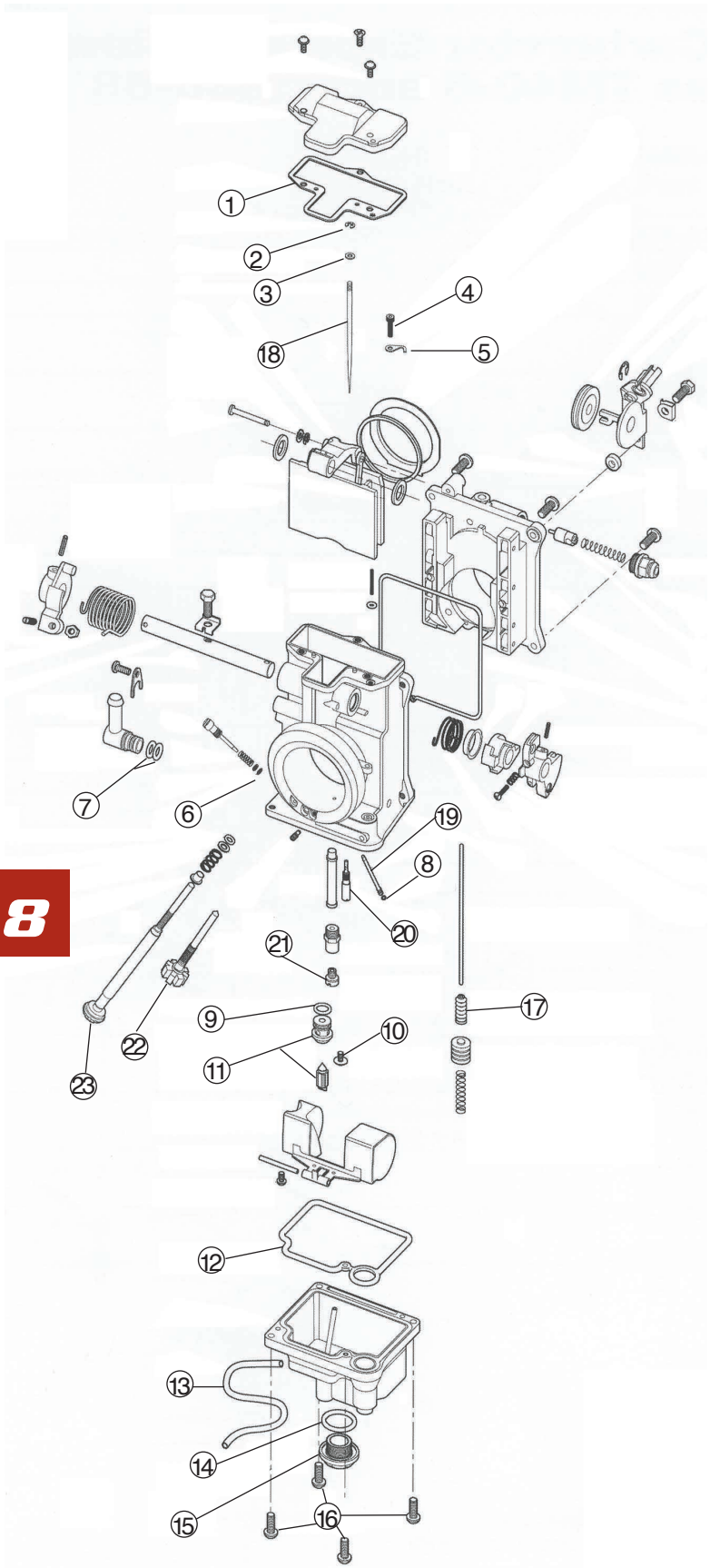

HSR REPLACEMENT PARTS LIST

1.	**42-471**	Gasket, to cover
2.	**42-464**	E-Ring, jet needle
3.	**42-463**	Washer, jet needle
4.	**42-523**	Screw, needle retainer
5.	**42-524**	Clip, needle retainer
6.	**42-469**	O-Ring, pilot air
7.	**42-466**	O-Ring, fuel air
8.	**42-468**	O-Ring, A/P
9.	**42-460**	O-Ring, N.V.
10.	**42-472**	Screw, N.V. Retainer
11.	**42-474**	Needle valve assy. (42/45)
	42-462	Needle valve assy. (48)
12.	**42-461**	Packing, float bowl
13.	**42-467**	Hose, overflow
14.	**42-473**	O-Ring, drain plug
15.	**42-525**	Drain plug (42/45)
	42-526	Drain plug (48)
16.	**42-465**	Screw, flt bowl, short
17.	**42-470**	Boot, A/P rod
18.	Jet Needle	
	(723 series)	
	42-514	#Y-2
	42-515	#Y-4
	42-516	#Y-6
	42-517	#Y-8
	42-518	#Z-0
	(HSR42)	
	42-475	#95 richest
	42-476	#96 richer
	42-477	#97 standard
	42-478	#98 leaner
	(HSR45)	
	42-479	#95 richest
	42-480	#96 richer
	42-481	#97 standard
	42-482	#98 leaner
	(HSR48)	
	42-529	#95 richest
	42-530	#96 richer
	42-531	#97 standard
	42-532	#98 leaner
19.	Accelerator Pump Nozzle	
	42-519	#70 std
	42-520	#60
	42-521	#50
20.	Pilot Jet	

42-484	#15 pilot	**42-491**	#32.5 pilot
42-485	#17.5 pilot	**42-492**	#35 pilot
42-486	#20 pilot	**42-533**	#37.5 pilot
42-487	#22.5 pilot	**42-534**	#40 pilot
42-488	#25 pilot	**42-535**	#42.5 pilot
42-489	#27.5 pilot	**42-536**	#45 pilot
42-490	#30 pilot		

21. Main Jet

42-493	#150 main	**42-504**	#177.5 main
42-494	#152.5 main	**42-505**	#180 main
42-495	#155 main	**42-506**	#182.5 main
42-496	#157.5 main	**42-507**	#185 main
42-497	#160 main	**42-508**	#187.5 main
42-498	#162.5 main	**42-509**	#190 main
42-499	#165 main	**42-510**	#192.5 main
42-500	#167.5 main	**42-511**	#195 main
42-501	#170 main	**42-513**	#200 main
42-502	#172.5 main	**42-503**	#175 main

22. **42-426** Short idle screw adjuster (optional)
23. **42-427** Long idle cable adjuster (standard)

A. *CHOKE CABLE WITH KNOB*

This is an over stock choke wire for custom carb installations where the factory wire isn't quite long enough, or it can be cut to fit stock application. Choke wire will fit FL, FX, FXWG, FXR & Sportster® where solid choke wire is used. Thin wire, 20" long shoulder is 2-1/4" long.

39-364 Choke cable wire with knob. Replaces OEM 29216-67/72, 29219-78 & 29219-82. SOLD EACH

39-414 Chrome choke tube. fits FX & XL with motor mount mounted choke control. 6-1/2" long, "S" curved. OEM 29215-78.

A

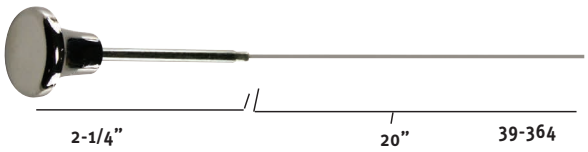

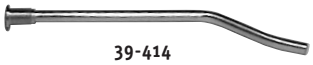

39-414

B. *THROTTLE CABLE SUPPORT BRACKET*

39-344 Throttle cable support bracket for Bendix carburetor. OEM 27459-74. SOLD EACH

IMPORTANT NOTE: CARBURETORS, INTAKE MANIFOLD AND THROTTLE CABLES MUST BE USED TOGETHER.

B



C. *ULTIMA® CARBURETOR JETS (FOR ULTIMA® & S&S® CARBS)*

Ultima® carburetor jets are meant for use with Ultima® R1/R2 carburetors & S&S® carburetors when adjusting fuel delivery. SOLD EACH

C



MAIN JET



INTERMEDIATE JET



MAIN JETS

39-15	.048	jet	**39-10**	.070	jet
39-13	.050	jet	**39-11**	.072	jet
39-14	.052	jet	**39-12**	.074	jet
39-16	.054	jet	**39-376**	.076	jet
39-371	.056	jet	**39-377**	.078	jet
39-372	.058	jet	**39-378**	.080	jet
39-373	.060	jet	**39-379**	.082	jet
39-374	.063	jet	**39-380**	.084	jet
39-8	.064	jet	**39-381**	.086	jet
39-9	.066	jet	**39-382**	.088	jet
39-375	.068	jet	**39-383**	.090	jet

INTERMEDIATE JETS

39-362	.025	jet
39-401	.0265	jet
39-363	.028	jet
39-370	.0295	jet
39-6	.031	jet
39-402	.032	jet
39-7	.033	jet
39-403	.036	jet
39-404	.040	jet

D. *JET ASSORTMENTS*

S&S® style main & intermediate jet assortment (2 of each jet) 42 sizes in 2 plastic cases. SOLD EACH

39-535 S&S® Style main & intermediate jet assortment.

Mikuni type main jet assortment (2 of each jet) 24 sizes in plastic case.

39-536 Mikuni type main jet assortment. SOLD EACH

HD type main & slow jet assortment (2 of each) 20 sizes in plastic case.

39-537 HD type main & slow jet assortment. SOLD EACH

HD CV carb jet assortments.

39-538 HD CV main jet assortment. 14 sizes (5 of each). SOLD EACH

39-539 HD CV slow jet assortment. 9 sizes (5 of each).

39-540 HD CV main & slow jet assortment in plastic case. 14 main/9 slow sizes (2 of each).

D



39-536



39-539



39-538

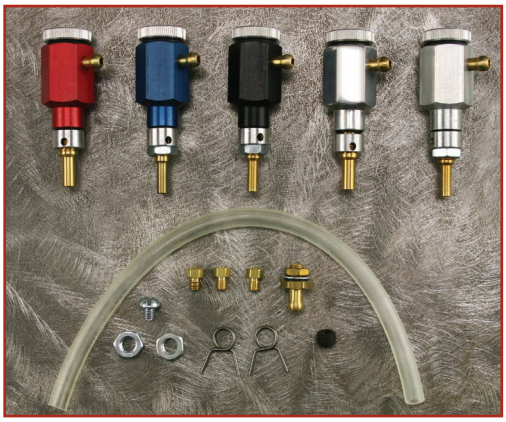



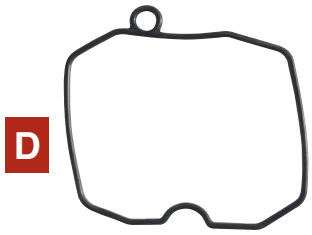

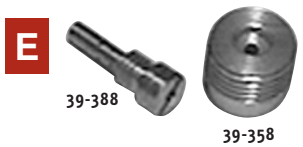



8

A. *THUNDERJET*

The ThunderJet is a jetable, externally mounted third fuel circuit that improves the performance of 2 circuit carbs such as the Ultima®, S&S®, Keihin and Bendix. In a performance application, the tuner generally encounters problems jetting the carb to give good, crisp mid-range response and still have strong top-end power. The answer? The ThunderJet, a high speed circuit, delivering needed fuel to the engine at higher rpms (4500 & up).
Engine pulses control ThunderJet's fuel delivery so that the correct amount of fuel goes to the engine under all types of conditions.
ThunderJet kits come with complete installation & tuning instructions and extra jets. Fits butterfly-type, Ultima®, CV, Keihin and Bendix carbs, and all models of S&S® carburetors. Some machining to the carb bowl and body is required. This is the cheapest horsepower your dollar can buy!

For Ultima® R-1 and S & S "G" carburetors.

39-424	Red Thunderjet.	SOLD AS KIT
39-425	Blue Thunderjet.	
39-426	Black Thunderjet.	
39-428	Polished Alum. Thunderjet.	

For Ultima® R-2, Bendix, and S & S "B" and "E" carburetors.

39-409	Red Thunderjet.	SOLD AS KIT
39-410	Blue Thunderjet.	
39-411	Black Thunderjet.	
39-418	Satin Alum. Thunderjet.	

For Keihin carburetors. SOLD AS KIT

39-421	Black Thunderjet.
39-422	Polished Alum. Thunderjet.

B. *KEIHIN ALLEN SCREW KITS*

Replaces all float bowl screws. Wrench included.

41-419	Keihin carb on Big Twin 1976 thru 1989 and XL 1976 thru 1987. Gardner Wescott.	SOLD AS KIT
41-946	Keihin CV carb on Big Twin 1990 & later and XL 1988 & later. Gardner Wescott.	

C. *JETS FOR KEIHIN CV CARBURETORS*

MAIN JETS (SOLD AS PKG OF 5)

39-162	#140	**39-172**	#190
39-163	#145	**39-173**	#195
39-164	#150	**39-174**	#200
39-165	#155	**39-175**	#205
39-166	#160	**39-176**	#210
39-167	#165	**39-177**	#220
39-168	#170	**39-178**	#230
39-169	#175	**39-179**	#240
39-170	#180	**39-180**	#250
39-171	#185		

PILOT JETS (SOLD AS PKG OF 5)

39-181	#40	**39-186**	#48
39-182	#42	**39-187**	#50
39-183	#44	**39-188**	#52
39-184	#45	**39-189**	#54
39-185	#46	**39-190**	#55

D. *KEIHIN FLOAT BOWL O-RING*

95-410	Fits constant velocity "CV" carburetor 1992 & later. OEM 27577-92.	SOLD EACH

E. *JETS FOR KEIHIN CARBURETORS*

Jets for Keihin carbs used as original equipment on Big Twin 1976 thru 1989 and Sportster® 1976 thru 1987. These jets are a must when installing a new exhaust system, new stock-style air cleaner or tuning the bike. Machined from brass. Stamped for clear identification.

MAIN JETS

39-355	# 1.65mm. OEM 27419-76.	SOLD AS PKG OF 5
39-357	# 1.75mm. OEM 27417-76.	
39-358	# 1.80mm. OEM 27416-76.	

PILOT JETS

39-195	.50mm.		
39-196	.52mm.		
39-197	.54mm.	**39-202**	.70mm.
39-198	.56mm.	**39-387**	.72mm. OEM 27897-78.
39-199	.58mm.	**39-203**	.74mm.
39-200	.60mm.	**39-388**	.75mm. OEM 27382-77.
39-201	.62mm.	**39-204**	.80mm.
39-385	.65mm. OEM 27896-79.	**39-205**	.88mm.
39-386	.68mm. OEM 27894-78.	**39-206**	1.00mm.

F. *PILOT JET REMOVAL/INSTALLATION TOOL FOR CV CARBS*

97-273	Pilot jet removal / installation tool.	SOLD EACH

A. *REBUILD KIT FOR KEIHIN*

39-389	Fits 40mm constant velocity "CV" carb on Big Twin 1990 & later, and Sportster® 1988 & later.	SOLD AS KIT
39-369	Fits all Keihin carbs 1976 thru 1986 (import).	SOLD AS KIT
39-160	CV carb accelerator pump upgrade kit.	SOLD AS KIT

39-161	CV carb emulsion tube.	SOLD EACH
39-191	Keihin/CV diaphragms, OEM#27361-76.	PKG. OF 10
39-192	Keihin/CV float valve, OEM#27337-76.	PKG. OF 10
39-193	Keihin/CV float valve, OEM#27886-78.	PKG. OF 10
39-194	Keihin/CV rubber boot, OEM#27311-76.	PKG. OF 10

A

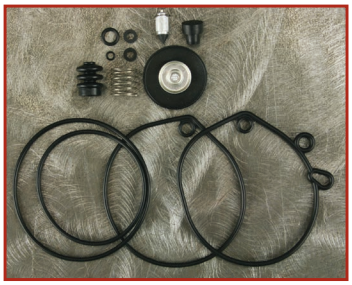

39-369



39-389

B. *KEIHIN CV PRO TUNER KIT*

More HP, better throttle response, fixes the hesitation off idle. Includes drills, spring, jets and instructions.

39-384	CV Keihin, on Big Twin and XL's 1989-up.	SOLD AS KIT

TUNER KIT JETS

39-207	#1.40	**39-214**	#1.75
39-208	#1.45	**39-215**	#1.80
39-209	#1.50	**39-216**	#1.85
39-210	#1.55	**39-217**	#1.90
39-211	#1.60	**39-218**	#1.95
39-212	#1.65	**39-219**	#2.00
39-213	#1.70	**39-220**	#2.05

B

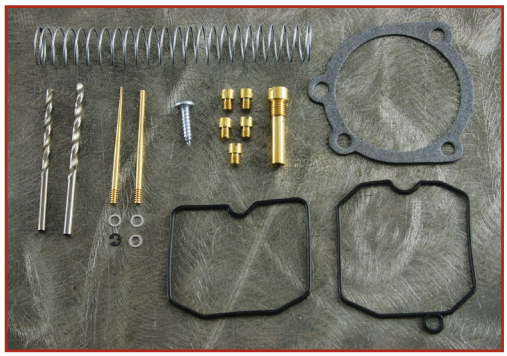

C. *FLANGE STYLE MANIFOLD ADAPTER*

69-65	To adapt 40/44mm manifold to 38mm Mikuni.	SOLD EACH

D. *INTAKE RING FOR ULTIMA® & S&S® HEADS*

Special intake O-ring for use with S&S® heads & intake manifold. Smaller cross section than OEM for better fit. A must-use item.

95-133	Intake O-ring. Fits 1984 Evolution® S&S® heads.	SOLD EACH

C



D



8

A



66-84

B



66-99



66-45

8

C



COLONY

D

12-212



CHROME TOP

12-108



K&N THE WORLD'S BEST AIR FILTER

A. *STAINLESS STEEL AIRCRAFT STYLE INTAKE CLAMPS*

Our stainless steel, improved design aircraft style intake clamps are available with early or late style manifold seals. Self-locking nuts also included. Fits Pan, Shovel & Sportster®.

66-98 Fits O-ring type, 1955 thru early 1978. SOLD AS PAIR
66-84 Fits rubber band type, late 1978 thru 1985. OEM 27066-85T.

Intake manifold seals fit Pan, Shovel & Sportster® intake manifolds.

95-760 O-ring seal. OEM 27060-55. SOLD AS PKG.
95-321 Rubber band seal. OEM 27062-78. SOLD EACH

B. *AIRCRAFT QUALITY T-BOLT BAND CLAMPS*

For 74", 80" and Sportster®, these band clamps employ heat treated 1/4"-28 plated steel T-bolts with plated steel locknuts for excellent strength, weatherability and ease of assembly. A crimped-in-place, flanged, floating bridge remains centered over the hose in the opening between clamp ends during tightening. A smooth inner band prevents cutting or bulging and allows greater torquing capability than conventional worm gear clamps. The band also assures an equalized 360° clamping force around the hose for tight connections.

O-ring type clamps for 1955 thru early 1978.

66-45 Clamps only. SOLD AS PAIR
95-760 O-ring seal. OEM 27060-55. SOLD AS PKG

Rubber band type clamps for late 1978 thru 1984.

66-99 Clamps only. SOLD AS PAIR
95-321 Rubber band seal. OEM 27062-78. SOLD EACH

C. *INTAKE MANIFOLD O-RING FOR CONVERSION NIPPLES*

95-760 O-ring only. SOLD AS PKG

D. *CRANKCASE VENT FILTERS*

Quiets breather system and filters impurities from entering the lower end of the motor. Helpful on models 1975 & later without stock air cleaner. 2-1/2" Dia. x 1-1/2" high with steel baseplate and 3/8" O.D. hose fitting.

12-212 Vent filter with rubber top.K&N. SOLD EACH
12-213 Vent filter with chrome top & mounting stud. K&N.
12-108 Vent filter with chrome top & mounting bolt. Imported.

A. *MANIFOLD FLANGE MOUNTING HARDWARE & SEALS FOR EVOLUTION®*

69-90 Front mounting flange. OEM 27009-86B. SOLD EACH
69-91 Rear mounting flange. OEM 27010-86B. SOLD EACH

Manifold mounting seal ring kit for Evolution® Big Twin & Sportster® with metal manifolds, 1989 & later.

95-403 Manifold seal kit. Replaces OEM 26995-86A (includes 2), and OEM 27002-89 (includes 1). SOLD AS KIT
78-210 Intake manifold seals. OEM 26995-86A. SOLD AS PKG. OF 10.

If you have ever removed the manifold on 1986 & later Sportster® or 1990 & later Big Twin you will instantly understand why you need this kit. The use of 12-point heads allows much easier access to the bolt in this confined area. Our bolt kit will work on all years Evolution®'s but is especially helpful on the years mentioned above. Any time you change or work on carbs, use this kit to replace the stock allen bolts.

41-945 Chrome plated, 12-point head flange bolts, four per kit. Replaces OEM 3201W. SOLD AS KIT

Knurled allen screws and washers mount intake manifold to cylinder head

41-148 Chrome manifold hardware for Big Twin & XL 1995 & later. Colony. SOLD AS KIT
97-274 Special designed wrench for intake manifold bolts on Evolution® Big Twin & Sportster®. SOLD EACH

B. *CRANKCASE BREATHER ASSEMBLIES*

Chrome plated die cast zinc base with 5/16" inlet. The included hose clamp holds the filter with attached lightweight chrome top in place. Easily installed.

12-241 Complete crankcase breather assembly. SOLD EACH
12-266 Replacement filter only for part No. **12-241** above. With chrome die cast top.

12-242 Economy crankcase breather with black rubber top. Mount bracket **NOT** included. SOLD EACH

C. *CRANKCASE VENT*

Increase horsepower with our new chrome crankcase vent.

12-240 Crankcase vent. SOLD EACH

D. *THRU-THE-HEAD CRANKCASE BREATHERS*

This kit is used when installing custom air cleaners that don't have provisions for thru-the-head crankcase venting. Can be routed to back side of new filter or used with crankcase vent filters.

12-281 Fits Big Twin 1993 thru 1999. Replaces OEM 29308-93 & 29310-93. SOLD AS KIT
12-282 Fits Sportster® 1991 & later. Replaces OEM 29281-91.

E. *CHROME BILLET GEAR BOX BREATHER*

Our new gearbox breather is fully machined from billet aluminum and then show chrome plated. Simple — just install to your existing gearbox overflow vent hose. Sponge inside holds excess oil and keeps it away from the rear wheel & tire.

25-107 Golan Products billet gearbox breather. SOLD EACH



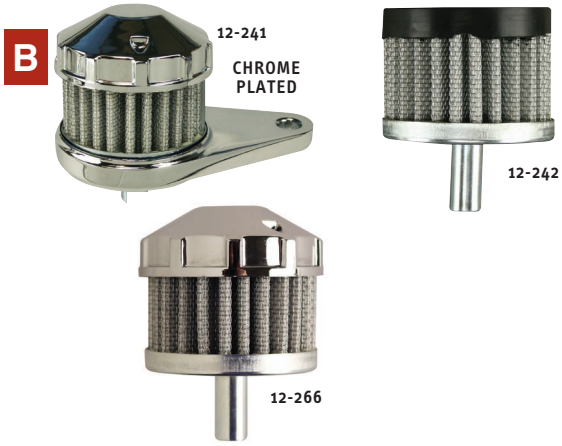



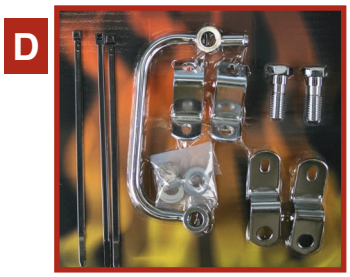

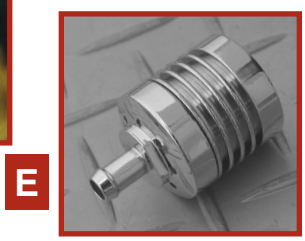

8

A



A. *CRANKCASE BREATHER KIT*

Crankcase breather kit with braided hose.

12-109 Fits 1993 thru 2001 Big Twin. SOLD AS KIT

B

CHROME PLATED



B. *HAYDEN KRANK VENT PLUS*

More than simply venting your crankcase fumes, the Krank Vent Plus, when installed on your engine breather hose, controls the air under the pistons by maintaining the proper amount of vacuum in the crankcase at any RPM. This prevents the engine from working against itself and prevents blown or weeping gaskets. You'll gain an added benefit of 2 to 7% increase in usable rear wheel horsepower. A better seal is achieved due to an increased pressure differential across the compression rings. The engine sounds deeper and is more powerful with a quicker throttle response. The unit also snaps open for easy cleaning.

21-307 Krank Vent Plus. SOLD EACH

8

D

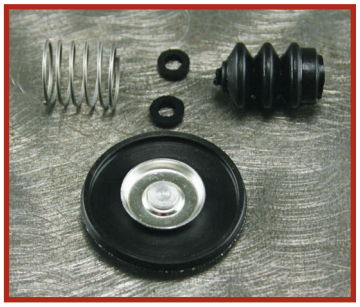

D. *ACCELERATOR PUMP DIAPHRAGM KIT FOR KEIHIN*

Diaphragm rebuild kit for all Keihin carbs (including late CV carb) 1976 to present on all Big Twin & Sportster® models. Will also replace diaphragm on S&S® "E" and "G" carbs. Kit includes the following items:

QTY.	OEM NO.	DESCRIPTION
2	27360-76	O-ring.
1	27311-76	Dust boot.
1	27361-76	Diaphragm.
1	27362-76	Spring.

39-408 Accelerator pump diaphragm kit. SOLD AS KIT

A. *AIR MIXTURE SCREW PACKING KIT*

Fits al Harley, Keihin & CV style carburetors. Contains poly-acrylic o-ring, packing washer & stainless steel spring. MADE IN USA.

39-310 Air mixture packing kit. SOLD AS KIT



B. *NO-HASSLE JET KITS FOR CV CARBS*

No kidding — your Granny could tune your stock Keihin CV carb with this kit. No drilling of the slide. Just wind-in the new tapered needle and choose from the slow and main jets provided. You won't think it's the same carb. Includes complete instructions to fine-tune for air cleaner, exhaust, or cam change.

39-450 Kit for 1989 thru 1999 Big Twin except Twin Cam 88™. SOLD AS KIT
39-446 Kit for 1988 thru 1999 XL 1200 except 1997 thru 1999 1200S.
39-447 Kit for 1988 thru 1999 Xl 883.
39-448 Kit for 1994 thru 1998 Buell S1, S2/T, S3/T, M2, and 1997 thru 1999 XL1200S.
39-449 Kit for 1999 & 2000 Big Twin and Twin Cam 88™, with CV carb.

97-273 Pilot jet removal/installation tool for above No-Hassle jet kits. SOLD EACH



97-273

C. *MANIFOLD INSULATING SPACER*

This spacer fits between intake manifold and carb keeping unwanted heat, which can cause vapor lock, away from the carb. Also helps performance by keeping gas cooler for better atomization. The spacer is 7/16" thick. Includes a gasket for both sides. Large center hole is 1-11/16" I.D. Mounting holes are 2-3/4" center to center.

78-151 Fits Bendix and Keihin flange mount carburetors. OEM 29250-78A. SOLD EACH
78-403 Gasket only. OEM 27077-78. SOLD AS PKG. OF 10

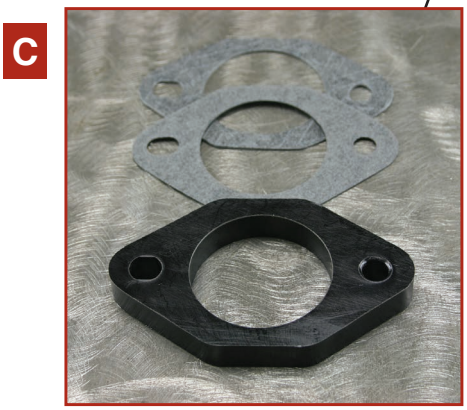

A



CHROME PLATED 12-122

B



CHROME PLATED

C



D



CHROME PLATED

E



8



39-440

G

CHROME PLATED

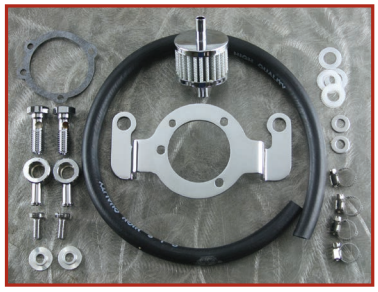

39-441

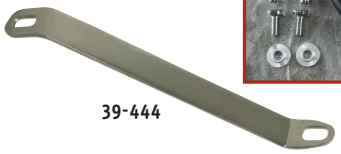

39-444

A. *EARLY H-D® STYLE AIR FILTERS*

7" Diameter x 2-1/2" thick. Same size & shape as the old round H-D® air filter. Fits Bendix, Tillotson and Keihin.

12-122 With engraved motorcycle logo. SOLD EACH
12-131 K&N element only for above air cleaners.

B. *ROUND AIR FILTER*

The high performance round-style air filter adds class. Fits H-D® Bendix, Tillotson, Keihin and S&S® carbs. The dimensions are 5-1/2" diameter x 1-3/4" thick.

12-117 Plain round air filter. SOLD EACH

C. *ROUND RAM-FLO AIR FILTER*

Improve the performance of your motorcycle with the Ram-Flo Air Filter that remains efficient where air demands are high. Flame retardant, washable in soap & water & designed to run dry.

12-113 For H-D® with Tillotson, Bendix, & Keihin carbs. SOLD EACH
12-114 For H-D® with Keihin CV carbs.
12-116 For H-D® with S&S® E and G carbs.

D. *DRILLED DISC AIR CLEANER*

For Bendix, Tillotson, Keihin (except "CV") and S&S® (except Super "E" & Super "G") carburetors. Complete with washable foam element & mounting hardware.

12-251 Air cleaner. Replaces OEM 80040-81. SOLD EACH

E. *AIR CLEANER SCREWS*

5/16 - 24 Oval head slotted screws. Replaces OEM 2402-W.

12-177 Fits many applications, including H-D® air cleaners. SOLD AS KIT OF 3

F. *AIR CLEANER SUPPORT BRACKETS*

CV Carb support bracket & crankcase breather kit for use with any CV air cleaner and thru-head crankcase breather. Does **NOT** include air cleaner.

39-441 For Evolution® Big Twin 1993 & later. SOLD AS KIT
39-440 For Evolution® Sportster® 1991 & later.

Teardrop air cleaner support bracket. Easily installed. Includes hardware.

39-444 For Shovel 1966 thru 1985. Replaces OEM 29206-87T. SOLD EACH

A. *HIGH PERFORMANCE AIR CLEANER KITS*

These round 5-7/8" dia. custom high performance air cleaners are made from billet aluminum and are designed for high end air flow along with easy fitment & service. Available in chrome or black anodized finish, they add a great look to compliment any bike theme or style. Each kit comes complete with a high performance filter, backing plate & mounting hardware.

12-205 Chrome HP classic smoothie A/C kit. SOLD AS KIT
12-206 Black HP classic smoothie A/C kit.
12-207 Chrome HP smooth cross A/C kit.
12-208 Black HP smooth cross A/C kit.
12-209 Chrome HP 5 Splade A/C kit.
12-214 Black HP Lone-Star A/C kit.



12-205

A



12-206



12-207



12-208



12-209



12-233

B. *HIGH PERFORMANCE EFI AIR CLEANER KITS*

Fits Harley® 2001- 2007 Softail®, 2002-2007 Touring models & 2004-2007 Dyna® models

12-572 Chrome Air Cleaner Kit for EFI Twin Cam®
12-584 Black Air Cleaner Kit for EFI Twin Cam®

Fits harley® 2007 & Later Sporster®, 2002-2007 EFI models.

12-585 Chrome Air Cleaner Kit for XL® 2007 & Later
12-586 Black Air Cleaner Kit for XL® 2007 & Later



B

12-572



12-584

8

C. *K&N AIR FILTER OIL*

103-12 SOLD EACH, 12 BOTTLES TO A CASE



C

D. *RECHARGER FILTER CARE SERVICE KIT*

A six step maintenance system designed to recharge any K&N Filtercharger® air filter. Completely restores air flow efficiency so your Filtercharger® performs like new!

103-201 Service kit. Includes 6.5 oz. air filter spray oil, 12 oz. filter cleaner and service decal. SOLD AS KIT

D



ULTIMA® AIR FILTERS

- Hand poured to eliminate wicking
- Zinc coated components to prevent rusting
- Urethane seals better to mating surfaces because it is more flexible
- 100% washable and reusable
- High-Flo four layer construction of surgical cotton
- Epoxy coated wire mesh



12-579



12-581



12-576



12-578



12-575

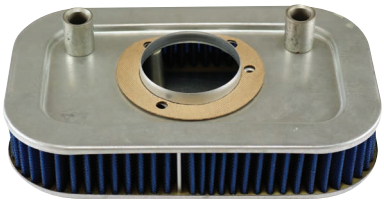

12-577

8



12-580



12-582

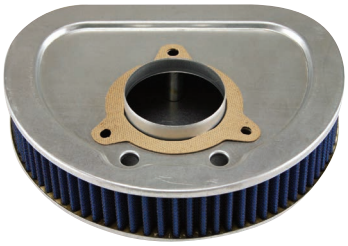

12-583

#	MODEL/YEAR	OEM NO.
12-579	S&S® Super E/G	
12-581	Fits '99-'06 carbureted Twin Cam equipped models, '01-'15 EFI Softail® (except '12-later FLS, '08-'11 FLSTSB & '11-later FXS and '13-later FXDB) & '02-'07 EFI Dyna® & Touring models.	29461-99
12-576	Fits '91-'95 Evolution® 1340-equipped Dyna®, FXR, Softail®, & Touring models.	29259-89, 29259-91A, 29330-96, 29259-93.
12-578	88'-03' XL	29036-88B, 29331-96
12-575	Fits '16-'17 Softail® & '08-'16 Touring & Trike models equipped w/ HighFlow Air Cleaner Kit.	29244-08.
12-577	Fits all '88-'03 Evolution equipped XL models.	29331-96
	04'-14' XL	29331-04,
12-580	Fits '07-later XL, '99-'07 Dyna®, '00-'15 Softail® and '99-'07 Touring models equipped with High-Flow Cleaner Kit	29442-99A,B,C,D 29442-99
12-582	Fits '08-'17 Dyna® models with teardrop air cleaner.	29191-08,
12-583	Fits '08-13 Touring and Trike models.	29633-08

A. *K&N CUSTOM AIR FILTERS FOR H-D®*

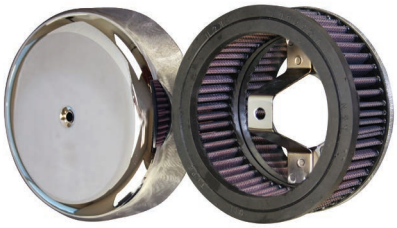

These K&N custom air cleaners were designed to fit H-D® motorcycles equipped with various carburetors. The K&N air cleaners are not street legal nor recommended by the Harley-Davidson® Motor Co., Inc. The K&N custom air cleaners can increase horsepower with proper carburetor calibration. **PROUDLY MADE IN THE U.S.A.**

TO ORDER: Locate the MIDWEST part number to the left of the K&N number, after finding the desired style & application. **YOU MUST ORDER BY THE MIDWEST PART NUMBER.**

APPLICATION	5" DIA. OPEN ROUND PART NO.	K&N NO.	6" DIA. CHROME BONNET PART NO.	K&N NO.
Keihin and S&S® carburetors, 1976 & later. Designed to bolt up directly to the Keihin or S&S® carbs.	**12-191**	RK-3201		
Linkert carburetors (early 4-bolt models)			**12-115**	RL-320B
Mikuni carburetors, 36 - 38mm. Designed to clamp directly to the carburetor flange. 2-7/16" Mounting flange.	**12-105**	RC-0850	**12-75**	ML-0850B
Mikuni carburetors, 40 - 44mm. Designed to clamp directly to the carburetor flange. 2-3/4" Mounting flange.	**12-201**	RC-0920	**12-76**	ML-0920B
Keihin Flowmaster carburetors, 36 - 38mm. Designed to clamp directly to the carburetor flange. 2-5/8" Mounting flange.	**12-253**	RK3800	—	RK-380B

SOLD EACH

REPLACEMENT ELEMENTS FOR AFTERMARKET CUSTOM AIR CLEANERS

APPLICATION	MIDWEST PART NO.	K&N NO.
Fits S&S® Teardrop shaped housing.	**12-131**	E-3225
Fits S&S® "E" & "G" Teardrop shaped housing.	**12-256**	E-3226

SOLD EACH



MODEL / YEAR	PART NO.	OEM NO.	K&N NO.
45" Models, 1941 thru 1955. 74" OHV, 1955 & 1956.	**12-126**	29036-41TA	E-2470
FL 1967 thru early 1975. FX 1971 thru early 1974. XL 1966 thru early 1973. XL 1983 thru 1985.	**12-127**	29036-72T	HD-0200
FL & FX, late 1975 & 1976. XL 1973 thru early 1975.	**12-128**	29086-73T	HD-2075
FL & FX, 1977 & early 1978 XL late 1975 thru 1978.	**12-129**	29086-75T	HD-2076
FL & FX (except FXST), late 1978 thru 1984. FLT 1980 thru 1982. FXR 1982 & 1983. XL 1979 thru 1982.	**12-130**	29255-78TA	HD-2078
FXR & FXST, 1983 thru 1985.	**12-181**	29259-83TA	HD-2084
FLT, FXR & Softail®, 1986 thru 1989.	**12-231**	29259-86T	HD-2086
XL 1988 thru 2003.	**12-260**	29036-88B	HD-1388
XL 2004 thru 2005.	**12-383**	29331-96	HD-8834

SOLD EACH

B. *K&N STOCK REPLACEMENT AIR FILTER ELEMENTS*

FOR ALL STREET LEGAL MOTORCYCLES:
K&N Replacement Air Filters are designed to fit right in the standard OEM airbox. No modifications are required by the owner, no jet changes or adjustment to the carburetors is anticipated or suggested. Customer modification of the standard airbox — removing the cover, drilling holes in side or top — will have a drastic effect on smooth carburetion. Modifications will cause the system to run lean and reduce horsepower. **KEEP IT STOCK** and the new K&N Replacement Element will be good for the life of the engine. Service every 50,000 miles. **YOU MUST ORDER BY THE MIDWEST PART NUMBER ONLY!**

MODEL / YEAR	PART NO.	OEM NO.	K&N NO.
FLHR 1994 thru 1998. FLHT 1995 thru 1998. FLHTC 1996 thru 1998. FLSTC 1991 thru 1999. FLSTF 1990 thru 1999. FLSTN 1996 thru 1998. FLSTS 1997 thru 1999. FXDL 1993 thru 1998. FLTR 1998. FXDS-CONV 1996 thru 1998. FXDWG 1993 thru 1999. FXSTC 1990 thru 1999. FXSTS 1990 thru 1999.	**12-261**	29259-91A	HD-1390
Twin Cam 88™ models (carbureted) 1999/2001 All Big Twin (carbureted & injected) 2002/2005.	**12-305**	29461-99	HD-1499
All Big Twin (fuel injected) 1999/2001.	**12-306**	29462-99	HD-8899
Teardrop air cleaners.	**12-131**	29282-89T	E-3225
Twin Cam® Screamin' Eagle replacement filter	**12-384**		HD-0800

SOLD EACH

8


26-204


26-205


26-206


26-207


26-210


26-211


26-200

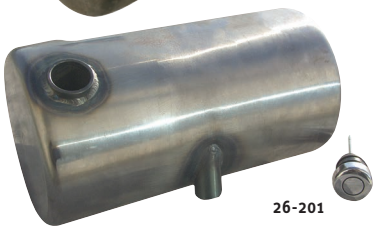
26-201


26-202



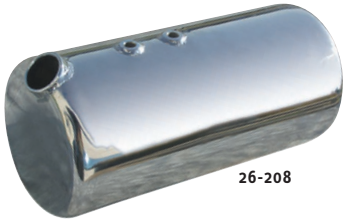
26-208


26-209

CUSTOM ROUND OIL TANKS

These custom steel oil tanks can be used on Softail® or rigid applications. They are 6-1/2" diameter and 11-3/4" long. Battery box is built in on all tanks except the universal applications. Available in center fill or side fill, chrome or raw metal. Tanks for wide Softails® have shorter "wings" for swing arm clearance. Use stock Softail® style rear mount. Front mount, filler cap and fittings are included (except Twin Cam® and universal applications).

3.5 QUART OIL TANKS FOR 1984 THRU 1999 SOFTAIL® OR RIGID FRAMES

6-1/2" Diameter, 11-3/4" long.

FLAT	DESCRIPTION
26-204	Side fill, chrome plated.
26-205	Side fill, raw metal.
26-206	Center fill, chrome plated.
26-207	Center fill, raw metal.

3.5 QUART OIL TANKS FOR TWIN CAM® SOFTAIL®

6-1/2" Diameter, 11-3/4" long. **NOTE:** Twin Cam® tanks require removal of coil bracket and relocation of coil. Also requires custom oil lines.

26-210 Side fill, chrome plated.
26-211 Side fill, raw metal.

3.5 QUART OIL TANKS FOR WIDE SOFTAIL® FRAMES

6-1/2" Diameter, 11-3/4" long.

FLAT	DESCRIPTION
26-200	Side fill, chrome plated.
26-201	Side fill, raw metal.
26-202	Center fill, chrome plated.
26-203	Center fill, raw metal.

4 QUART OIL TANKS FOR CUSTOM UNIVERSAL USE

5-1/2" Diameter, 11-3/4" long. NO BATTERY TRAY.

26-208 Side fill, chrome plated.
26-209 Side fill, raw metal.


5-290


5-286


5-288


5-289


5-287


5-308

UNIVERSAL OIL TANK ACCESSORIES

5-286 Drain plug, magnetic.
5-287 Oil tank front rubber mount 5/16-18 stud & 5/16-24 stud.
5-288 Front oil tank mount.
5-289 Front oil tank mount.
5-290 Oil tank mounting kit.
5-308 Front oil tank mount for Ultima® frames & custom mounting applications.

A. *ULTIMA® OIL TANKS FOR SOFTAIL®*

This late style, smooth top (no weld seam), 4 spigot oil tank fits all Softail® models 1984 thru 1999. Replaces stock FXST oil tank. Order mounting bracket separately. Replaces OEM 62498-89A & 62498-91.

26-112	Chrome oil tank, side fill.	SOLD EACH
26-114	Bare metal oil tank, side fill.	
26-127	Chrome oil tank with extended sides, side fill.	
26-220	Chrome oil tank, center fill.	
26-221	Bare metal oil tank, center fill.	

B. *OIL TANK FOR SPORTSTER®*

Chrome plated oil tanks for Sportster® models.

26-128	Fits 1983 thru 1993. OEM 62475-83.	SOLD EACH
26-129	Fits 1994 thru 1996. OEM 62475-94.	
26-170	Fits 1997 thru 2003. OEM 62475-97.	

C. *OIL TANK FOR SOFTAIL®*

This late style 4 spigot oil tank fits all Softail® models 1984 thru 1999. Replaces stock FXST oil tank. Order mounting bracket separately.

26-133	Oil tank with Smooth top (no weld seam). Replaces OEM 62498-89A. & 62498-91. Chrome plated.	SOLD EACH
5-142	Rear mount bracket, chrome plated.	
5-143	Rear mount bracket, black. Replaces OEM 62704-84.	
5-144	Front mount bracket, chrome plated.	
5-145	Front mount bracket, black. Replaces OEM 62707-84.	

D. *CUSTOM WRAP-AROUND & HORSESHOE OIL TANKS FOR 74" SUPER GLIDE®*

Oil tank accepts stock FXE battery. Fits FL, FX, & FXE 1965 thru 1983, but will not fit FXR 1982 & 1983.

26-113	Flat side, 4 qt. wrap-around oil tank. Chrome.	SOLD EACH
26-241	Flat side, 4 qt. wrap-around oil tank. Raw metal.	SOLD EACH
26-119	3.5 qt. horseshoe oil tank.	SOLD EACH

E. *ORIGINAL STYLE OIL TANK FOR SPORTSTER®*

Fits all electric start Sportster® 1958 thru early 1978. Available black or chrome. OEM 62507-67A. Top cap must be ordered separately.

26-95	Chrome plated oil tank.	SOLD EACH
26-98	Black oil tank. **NOTE:** Not intended for chrome plating.	
21-189	Top cap only. Fits 1954 thru 1978. OEM 62610-52A.	

F. *CUSTOM OIL TANKS*

These chrome plated/raw metal oil tanks are made to fit 1984-1999 Softail® type frames. A front "horseshoe" weld-on mount is included for O.E. frames.

26-225	Domed round oil tank. Center fill, 3.5 quart.
26-229	Domed round oil tank. Center fill, 3.5 qt, raw metal.
26-226	Domed round oil tank. Side fill, 3.5 quart.
26-230	Domed round oil tank. Side fill, 3.5 qt., raw metal













8











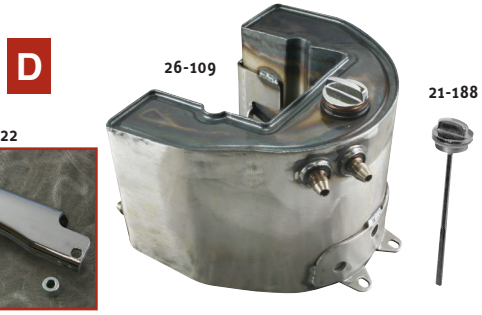

8



COLONY
CADMIUM
PLATED

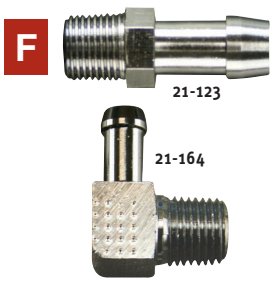



G. *OIL LINE FITTINGS*

Chromed oil line fittings. Brass construction.

21-466	1/4" x 90˚ chromed brass fitting.	SOLD EACH
21-467	1/4" x 3/8 barb chromed brass fitting.	SOLD EACH

A. *OIL TANK FOR TWIN CAM®*

Side fill chrome horseshoe oil tank for 2000-2007 Softail®. OEM#62498-00.

26-100	Horseshoe side fill oil tank.	SOLD EACH

B. *CUSTOM HORSESHOE OIL TANK FOR ELECTRIC START BIG TWIN*

Horseshoe, side fill, 4qt oil tank. Accepts the FXE battery, fits 1958-1964 Rigid & early swingarm frames w/an electric start & steel primary covers, & clears 1979-later 4spd transmissions.

26-118	Horseshoe oil tank.	SOLD EACH

C. *OIL TANK, CAP & TRIM FOR FL & FX*

A great reproduction of OEM style FX & FL oil tank.

26-110	Chrome plated oil tank. Fits FL 1965 thru early 1982 and FX 1971 thru early 1982. Internal filter. OEM 62504-65A.	SOLD EACH
26-116	Same application as above part No. **26-110** except Black.	
21-189	Oil tank cap. Fits FL 1965 thru early 1982, FX 1971 thru early 1982 and Sportster® 1954 thru 1978. OEM 62610-52A.	
89-252	H-D® Style chrome trim for oil tank. Fits 1965 & later. OEM 62534-65.	

D. *ORIGINAL H-D® STYLE OIL TANK*

These tanks are original OEM reproductions except for 2 important modifications. The first & probably most important was to find a grade of steel much stronger than the original for all brackets. The two places where the holes are mounted have a pressed-in support washer for added strength to prevent splitting, thus eliminating fatigue. The second was to chrome plate these tanks except for part No. **26-109** which is unchromed for painting. Each tank comes with a filler cap & necessary mounting hardware. SOLD EACH

26-107	Fits 1936 thru 1957 rigid frame Big Twin. Side fill.
26-108	Fits 1936 thru 1964 rigid frame Big Twin. Center fill.
26-109	Same as above part No. **26-108** except bare metal (not chrome) for painting.
21-188	Filler cap with dip stick only. For center fill tank. OEM 62625-36.

5-122	Tank support bracket & hardware for FL & FLH, 1958 thru 1964. OEM 62584-58. Chrome plated.	SOLD AS KIT

E. *OIL TANK MOUNTING KIT FOR BIG TWIN*

Reproduction fasteners: 4 bolts, 2 nuts, 4 lockwashers and 2-7/16" spacers.

21-161	To mount oil tank on Big Twin 1936 thru 1964.	SOLD AS KIT

F. *OIL LINE FITTINGS*

Use to hook up our vinyl oil line to stock or custom oil tanks.

MALE SPIGOT

21-32	1/4" NPT with 5/16" spigot.	SOLD EACH
21-123	1/8" NPT with 3/8" spigot.	
21-207	1/8" NPT with 1/4" spigot.	

MALE PIPE ELBOW

21-304	1/8" NPT with 1/4" spigot.	SOLD EACH
21-163	1/8" NPT with 5/16" spigot.	
21-164	1/4" NPT with 5/16" spigot.	

A. *REINFORCED BLACK RUBBER FUEL & OIL LINE*

79-12 1/4" I.D., sold by the 25' roll. SOLD EACH
79-13 5/16" I.D., sold by the 25' roll.
79-14 3/8" I.D., sold by the 25' roll.

B. *REINFORCED OIL LINE*

Nylon reinforced clear vinyl oil line will withstand high temperatures and pressures up to 750 psi. Will not shrink or harden.

79-11 5/16" I.D. vinyl oil line. SOLD BY 25 FOOT ROLL

C. *VARIOUS RUBBER MOUNTS*

MOUNT & STUD

Rubber mount and stud, with steel side plates, for battery box and oil tank. Can be used for many custom applications.

5-80 1/4 - 20 Threaded studs. OEM 62563-65. SOLD EACH
5-133 5/16 - 18 Female one side with 5/16 - 18 stud on opposite side. OEM 50235-63.
5-287 5/16 - 18 stud on one side with 5/16 - 24 stud on opposite side.

HEAVY DUTY

Heavy duty rubber mounts for oil tanks, battery trays and other applications. The rubber body conceals an internal wound spring that's welded to the end plates.

5-132 1/4 - 20 Threaded stud on both sides. SOLD EACH
Replaces OEM 62563-65.
5-134 5/16 - 18 Female on one side, 5/16 - 18 male on opposite side. Replaces OEM 50235-63.

FRAME CUSHION

5-197 1/4 - 20 Threaded stud for 1984 & later Softail® SOLD EACH
swing arm. OEM 11451. See chrome billet grommet covers in this section.

D. *STAINLESS STEEL CLAMP*

This is a screw type clamp.

21-1 For use with all sizes of our SOLD EACH
fuel and oil line. Fits 7/32" thru 5/8".

E. *HOSE CRIMP TOOL & CLAMPS*

97-104 Hose band clamp crimp tool. SOLD EACH

66-204 11/32" I.D. For chain oiler. OEM 9992. SOLD EACH
66-205 7/16" I.D. For chain oiler. OEM 9996.
66-206 17/32" I.D. For 1/4" fuel line. OEM 10014.
66-207 19/32" I.D. For oil line. OEM 10084.
66-208 11/16" I.D. For oil line. OEM 10020A.
66-209 13/16" I.D. For oil line. OEM 10086.

BUY CLAMPS AT QTY. 25 OR 50 FOR BEST PRICE

F. *OIL LINE FITTING*

21-170 Adapts 1/8" NPT female to H-D® oil lines. SOLD EACH

G. *STOCK STYLE CHROME OIL TANK PLUGS*

Provides a beautifully die cast cap without all the factory writing on it!

21-62 Plug only. Fits all models with a push in SOLD EACH
type fill plug.
21-63 Plug with 2-1/2" dipstick. Fits all Softail® models 1984 & later, and Sportster® 1982 & later.

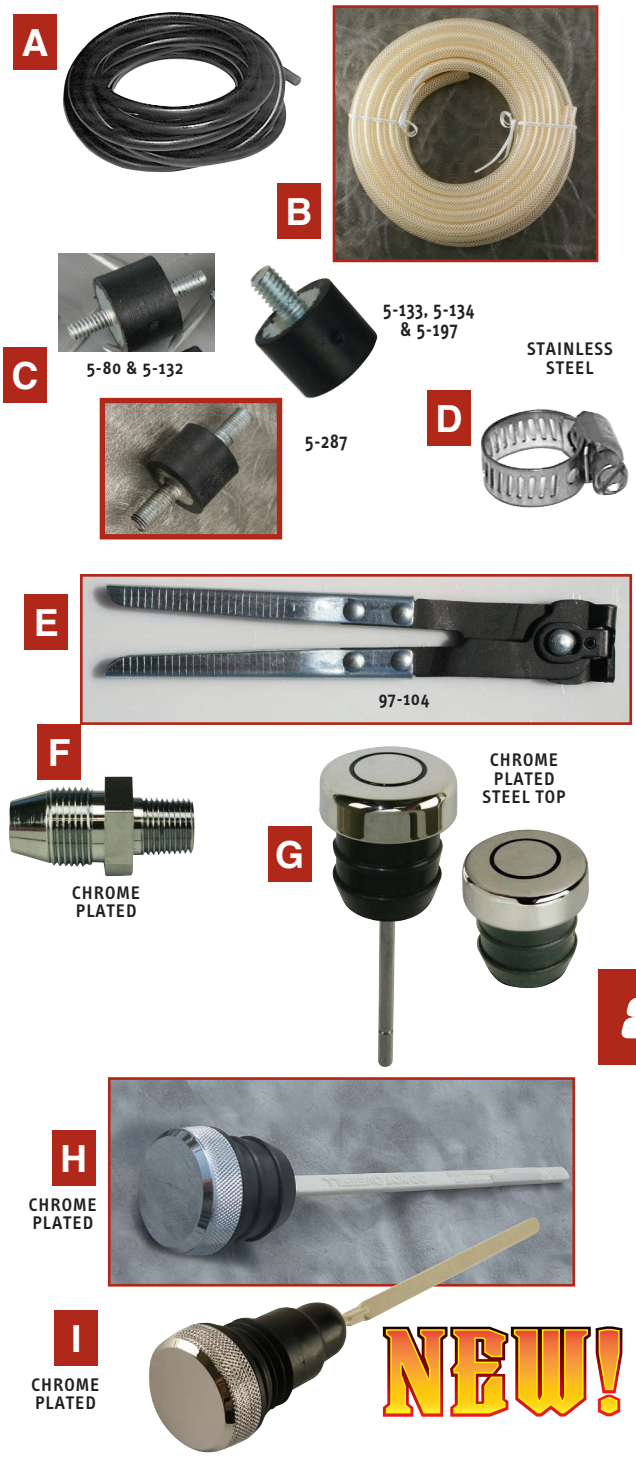

8

H. *OIL TANK CAP & DIPSTICK EARLY MODEL*

Chrome plated oil tank filler plug with dipstick.

21-530 Fits FLT, FLHT, FLHS & Road King®, SOLD EACH
1993 thru 2003. Replaces OEM 62640-93 & 62607-93

I. *OIL TANK CAP & DIPSTICK LATE MODEL*

Fits: FLHR '12-'16 / FLHRC '12-'13 / FLHTC 2012 / FLHTCU '12-'16 / FLHTCUL '15-'16 / FLHTK '14-'16 & 2012) / FLHTKL '15-'16 / FLHTKSE '14-'16 / FLHX '12-'16 / FLHXS '14-'16 / FLTRU '12-'13 & 2016 / FLTRX '15-'16 & '12-'13 / FLTRXS '15-'16 / Trike FLHTCUTG '12-'16 & FLRT '15-'16 Models.

21-64 Oil Dipstick with chrome cap. SOLD EACH



DIGITAL DISPLAY

KOSO

A NEW! B



CHROME PLATED

C



21-90 21-91 21-92

8

DETAIL OF GAUGE FACE

D

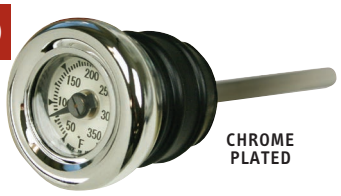

CHROME PLATED

E



25-116

F



A. *DIGITAL FACE HD® DIPSTICK*

Verify oil level and temperature fast! The digital face reads your bike's vital signs with ease and on the go. 1 Step install with no wiring. Power is a CR2032 battery. For F° or C°.

21-308 Black Oil Dipstick with digital face. For 2007 - 2016 Touring models.

B. *COMBINATION OIL TANK CAP & DIPSTICK*

Here are two functional decorative items for H-D® oil tanks. These combination filler cap & dipsticks will fit stock H-D® tanks 1936 thru 1964 and all accessory tanks with 1-1/4 - 20 thread.

21-72 Colony. Hex size & shallow crown are similar to a Knucklehead Knuckle Nut. Packaged complete with O-ring. SOLD AS KIT

21-188 Duplicate of OEM 62625-36 with dipstick. Chrome. SOLD EACH

C. *OIL TEMPERATURE DIP STICKS*

These highly accurate gauges with black face / white numerals quickly respond to oil temperatures up to 350°F and give a continually accurate reading of the motor oil temperature, enabling the rider to tell at a glance if the oil is overheating, and by how much. Made to fit into oil tank in place of present cap. SOLD EACH

21-90 Fits 1965-1991 OEM and custom side fill tanks. Except Dyna®, XL & Softail®. Dipstick length is 5-1/8". OEM 62635-79T & 62666-87T.

21-91 Fits 1982-2003 XL and 1984-1999 Softail®. Dipstick length is 2-5/8". Replaces OEM 62667-87T & 62668-87T.

21-92 Fits Softail® 2000-2012. Replaces OEM 62845-00A.

D. *OIL TEMPERATURE DIP STICKS*

Temperature gauge surrounded by very good chrome; quality Japanese manufacture. Fits into oil tank in place of stock cap.

21-305 Fits Big Twin 1970 thru 1984 with square type oil tank, FXR 1984 thru 1994, FLT 1987 thru 1992, Sportster® 1970 thru 1978, and many custom oil tanks. Probe length is 4". Replaces OEM 62635-79T. SOLD EACH

21-306 Fits Softails® 1984 thru 1999 and Sportster® 1982 & later. Probe length is 2-5/8". Replaces OEM 62668-87T.

21-361 Fits Softail® 2000 & later. Replaces OEM 62896-00.

E. *OLD STYLE OIL FILTER ASSEMBLY*

Fits Big Twins 1940 thru 1964. Will also work on any H-D® V-Twins.

25-116 Paper style oil filter element. SOLD EACH

F. *MAGNETIC DRAIN PLUG*

Magnetic drain plugs have be proven to add to the life of your engine and transmission by removing metal particles from the oil. Cheap insurance! Cad plated.

41-163 Replaces OEM 734. 1/8 - 27 NPT hex head. Used for various aftermarket oil tank drain plugs and 1987 thru 1989 Big Twin inner primary. SOLD EACH

A. *"CLOSE CLEARANCE" OIL PUMP FITTING*

For use in close clearance applications where standard 90˚ elbows won't work. 5/16" Allen on top lets you get good tight fit. Male thread is 1/8" NPT, female 1/8" NPT.

21-440 Fitting 1/8 NPT for close clearance 90˚.
21-123 Vent line fitting 1/8 NPT, OEM 63578-52-straight.
21-181 Oil tank fitting 1/8 NPT, for use with 3/8" oil & fuel lines - straight. SOLD EACH

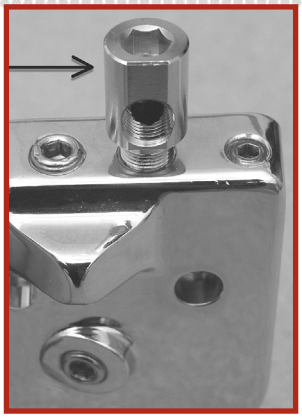

A

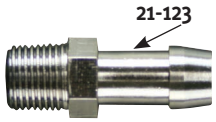

21-123



21-181

B. *CUSTOM STAINLESS STEEL BRAIDED OIL LINES*

Midwest offers these custom oil lines. **Midwest oil line meets D.O.T. specification FMVSS-106 — approved for street use — 50 state legal.** High performance #6 stainless braided hose gives you the custom look you want with the performance feel you demand. Lines incorporate an inner liner and chrome plated fittings. Top quality hose and fittings are attractively packaged to make these parts fly off the shelf. And a budget price tops off the complete program!

PRE-ASSEMBLED OIL LINES

71-181	8" length.	**71-189**	16" length.
71-182	9" length.	**71-190**	17" length.
71-183	10" length.	**71-191**	18" length.
71-184	11" length.	**71-192**	20" length.
71-185	12" length.	**71-193**	22" length.
71-186	13" length.	**71-194**	24" length.
71-187	14" length.	**71-195**	26" length.
71-188	15" length.		

SOLD EACH



B

ALL PARTS SOLD AS KIT

O-RINGS

95-866 Replacement O-ring for Midwest custom oil lines & oil line kits SOLD EACH

8

C. *BRAIDED STAINLESS STEEL OIL LINES*

Flexible, heat resistant & trouble free. These sturdy aircraft quality braided steel oil lines are good looking and practical. The rust-proof, high luster finish blends right in with the chrome while the braided surface adds a distinctive look of its own. They are long lasting and solve the problem of cracked oil lines due to road vibration.

74" TANK TO ENGINE SOLD AS SET

71-131 For 1968 & later. **NOTE 1.**

ROCKER OILERS

71-124 For 74" 1966 thru 1999. SOLD AS SET

NOTE 1: Stock replacement. Stock oil tank or custom oil tank with all fittings in stock location, stock engine fittings.

C

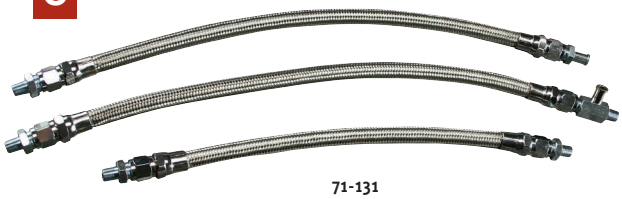

71-131



71-124

D. *BRASS ROCKER BOX OIL LINE KIT*

Brass rocker box line kit includes T-piece to oil the heads with 6mm brass tubing and brass fittings. Easy to install, hex fitting goes in the engine block then insert two brass tubes into the junction piece.

SOLD AS KIT

71-147 Fits '66-'84 FL, '79-'83 FLT, '82-'83 FXR models.



D

71-147

A

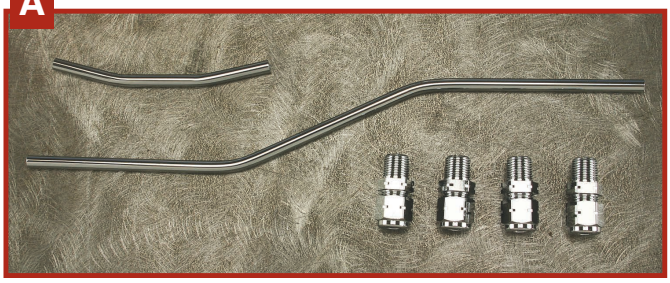

71-137

CHROME PLATED



95-127

A. *ROCKER COVER OIL LINES FOR SPORTSTER® & SHOVEL*

Perfect replacement rocker box oil lines for Sportster® & Shovels. Includes complete fittings and seals.

71-138	For Sportster® 1957 & later. OEM 17324-57.	SOLD AS SET
71-137	For Shovel 1966 & later. OEM 62783-66A and 62785-66A.	SOLD AS SET
95-127	Oil line sleeve for Shovel &Sportster® rocker oiler. OEM 63529-57.	SOLD EACH



71-138

B. *STAINLESS STEEL BRAIDED HOSE*

This stainless steel braided hose is of the same premium quality hose used by many top racing teams. Quality hose is demanded because of its unique combination of professional appearance, extreme flexibility and unexcelled reliability under the most stringent racing conditions.

71-139	7/32" I.D. x 7/16" O.D. #4 gas line.	SOLD PER FT
71-140	11/32" I.D. x 17/32" O.D. #6 gas or oil line.	

B



C. *STAINLESS STEEL BRAIDED HOSE*

Economical alternative stainless steel braided hose.

GAS LINE — 1/4" I.D. X 1/2" O.D.

71-141	6' Roll.	SOLD AS ROLL
71-142	10' Roll.	
71-143	20' Roll.	

GAS/OIL LINE — 3/8" I.D. X 5/8" O.D.

71-144	6' Roll.	SOLD AS ROLL
71-145	10' Roll.	
71-146	20' Roll.	

C

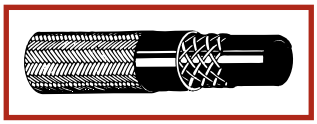

D. *OIL DRAIN VALVE*

Oil drain valve designed to eliminate spillage when changing oil. Installed in oil tank in place of drain plug with 5/8 - 18 threads, a rubber hose is pushed over the spigot to route waste oil to a container, avoiding the usual mess. Retighten spigot, pull off hose, refill with oil and you're ready to go. No clean-up or fishing for the drain plug in the bottom of the drain pan. Made of machined aluminum.

21-239	Oil drain valve, 5/8 - 18.	SOLD EACH

D



MACHINED ALUMINUM

E



CHROME PLATED

E. *OIL LINE FITTINGS*

Duplicate of original oil pump fittings on 74" 1936 thru 1964. Can be used with many custom oil tanks (with 1/8" N.P.T. female threads) to convert to male nipples so stainless braided lines can be used.

21-111	Fits Pan & Knuckle 1936 thru 1964.	SOLD AS SET

A. *FUEL/OIL LINE SEPARATOR*

Chrome plated die cast separator for routing gas lines, oil lines and 3/8" or 5/16" I.D. stainless steel braided lines.

21-265 Separator. SOLD EACH



CHROME PLATED

B. *HOSE ENDS FOR STAINLESS STEEL BRAIDED HOSE*

Chrome plated custom hose ends. Can be used on all types of gas and oil lines including stainless steel braided hose.

GROOVED PART NO.	HEX PART NO.	TO FIT I.D. HOSE SIZE
21-315	**21-263**	1/4"
21-316	**21-264**	3/8" & 5/16"

SOLD AS PACKAGE OF SIX



GROOVED HEX

C. *HOSE ENDS & NIPPLES FOR STAINLESS STEEL BRAIDED HOSE*

This is an economical, functional & durable hose end system for use with our part No. **71-140** stainless steel braided hose. Easily assembled, these ends & nipples have many applications where safe, reliable, professional appearing plumbing is needed for street & show.

21-147 Straight end. 9/16 - 18 Female thread. SOLD EACH
21-148 90 ° Elbow. 9/16 - 18 Female thread
21-149 180° Elbow. 9/16 - 18 Female thread.



21-147 BLUE



D. *SPECIAL ADAPTER FITTINGS FOR STAINLESS STEEL BRAIDED HOSE ENDS*

Nipple — pipe thread.
21-150 1/4" NPT — to 9/16 - 18 fittings. SOLD EACH

Elbow tube - pipe thread.
21-152 1/4" NPT — to 9/16 - 18 fittings. SOLD EACH

Elbow 45° tube - pipe thread.
21-154 1/4" NPT — to 9/16 - 18 fittings. SOLD EACH

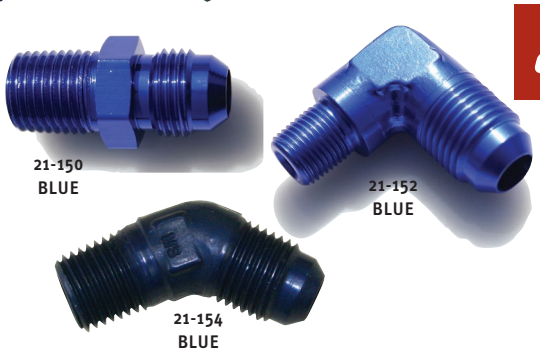

8

E. *HOSE ENDS FOR STAINLESS STEEL BRAIDED HOSE*

Hose ends dress up a stainless steel braided hose installation and cover a greater length of hose than standard clamps, providing greater support. If the hose end is used with an uncovered rubber hose, the support provided tends to reduce the amount of vibration wear usually found at the edges of the worm gear clamp, resulting in a longer lasting connection. The interior grooving of the hose end prevents the hose from "hanging up" on the clamp and assures proper placement of the worm gear type clamp in the hose end. Available in red or chrome. SOLD EACH

RED PART NO.	CHROME PART NO.	TO FIT ABOVE HOSE PART NO.
21-145	**21-173**	**71-139** Gas line.
21-146	**21-174**	**71-140** Gas/oil line.





21-540



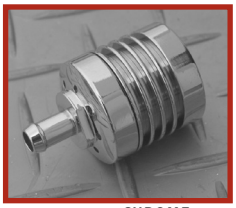

CHROME PLATED











A. *RENEGADE -BLACK- STAINLESS STEEL OIL LINE FITTINGS FOR H-D®*

The all-new Renegade oil line components offer a classic look combined with the latest technology. Working on a retro build or a late model custom? If so, the Russell Renegade line has you covered. Utilizing their exclusive Twilight Black finish, Renegade offers that traditional black hose appearance coupled with the technology of their Powerflex hose for superior performance.

ADAPTER FITTINGS

21-540 #6 Male flare to 1/4" male NPT 45˚.

B. *OIL FILTER MOUNTING BRACKETS*

SOLD EACH

25-85 For FL & FX swingarm, 1965 thru 1985.

C. *CHROME BILLET GEAR BOX BREATHER*

Our new gearbox breather is fully machined from billet aluminum and then show chrome plated. Simple — just install to your existing gear-box overflow vent hose. Sponge inside holds excess oil and keeps it away from the rear wheel & tire.

25-107 Golan Products billet gearbox breather. SOLD EACH

D. *MICROGLASS OIL FILTERS*

These microglass spin-on oil filters are a breakthrough in technology. The new synthethic media stops particles dead in their tracks! Fits all 99'-present Twin Cam® and EVO 1340 models as an upgrade for any motorcycle that requires OEM# 69796-77A, 63805-80A, 63812-90 & 63813-90

25-68 Microglass, spin-on oil filter. Chrome, w/nut. SOLD EACH
25-69 Microglass, spin-on oil filter. Chrome, plain. SOLD EACH

E. *FRAM EXTRA GUARD OIL FILTERS*

Cellulose and Synthetic glass media provides 3X MORE engine protection than the average of leading economy oil filters.

25-128 Fits all 1994-2010 XL models. Black. SOLD EACH
25-129 Fits all 1994-2010 XL models. Chrome. SOLD EACH

F. *FRAM OIL FILTER ELEMENT FOR YAMAHA*

FRAM Motorcycle filter media helps keep the engine running clean while maintaining optimal flow levels. High-quality materials and construction help keep your bike running optimally.

25-162 Oil filter element. Fram# CH6004. SOLD EACH

G. *OIL FILTERS FOR INDIAN MOTORCYCLES*

25-175 Oil filter, Indian® '99-'12 chrome SOLD EACH
25-176 Oil filter, Indian® '14-'16 chrome SOLD EACH
25-177 Oil filter, Indian® '14-'16 black SOLD EACH

H. *OIL FILTERS FOR VICTORY MOTORCYCLES*

25-178 Oil filter, Victory®, chrome SOLD EACH
25-179 Oil filter, Victory®, black SOLD EACH

A. *ULTIMA® SPIN-ON FILTERS*

DESCRIPTION / APPLICATION	MAGNETIC CHROME PART NO.	CHROME STANDARD PART NO.	BLACK STANDARD PART NO.
Standard oil filters are available in Chrome or Black finish. The high performance Magnetic filters have a magnetic ring tower that removes smaller metal particles that otherwise might travel through the filter and back into your engine. Chrome plated finish.			
5/8-16 UNF. Replaces OEM 63782-80 & 63810-80. Sportster® 1980 thru early 1984. FL & FX 4 speed late 1982 thru 1986 (except Softail®).	**25-142**	**25-60**	**25-122**
3/4-16 UNF. Replaces OEM 63796-77 & 63805-80. Sportster® late 1984 & later. Softail® 1984 & later.	**25-143**	**25-78**	**25-123**
Extra long 5.5" filter. 3/4-16 UNF. Replaces OEM 63813-90 & 63812-90. Sportster® late 1984 & later. All Big Twin models 1982 thru 1998. Dyna Glide® 1991 thru 1998.	**25-144**	**25-79**	**25-132**
Fits V-Rod 2002 & later. Replaces OEM 63793-01K.	—	—	**25-90**

—MICROGLASS—

Replacement Oil Filter for Harley-Davidson® Twin Cam 88® & Evolution® 1340 models as an upgrade for OEM 69796-77A, 63805-80A,63812-90, 63813-90	**25-70**	**25-71** SOLD EACH

A



B. *ULTIMA® REPLACEMENT OIL FILTER ELEMENTS* *BIG TWIN, K MODEL & SPORTSTER®*

NOTE: Filter OEM 63840-48 was installed as original equipment by the H-D® factory on all models listed from 1948 thru 1953. It was offered in retrofit kit form for the earlier applications listed. SOLD EACH

25-77 Paper type K Model/Sportster® 1952 thru 1979. Big Twin 1953 thru 1983.



25-70 25-71

8

C. *ULTIMA® REUSABLE BILLET LIFETIME OIL FILTERS*

Reusable billet lifetime oil filters. THE LAST OIL FILTER YOU WILL EVER BUY FOR YOUR BIKE!!! High Performance Stainless Steel Micron Oil Filter with Billet Housing.
The cleanable unit will filter smaller particles than paper filters.
This filter also pre-cleans the oil by grabbing metal particles with 3 high powerful magnets, and then it filters the oil by utilizing a fine stainless steel woven mesh element to catch particles as small as 25 microns.
Using this filter increases engine horsepower by 2% to 3% by allowing oil to flow more freely which reduces oil levels in the engines sump thereby reducing oil/flywheel obstruction.
The filter also has a pressure by-pass valve to prevent high oil pressure conditions caused by extremely cold weather and really dirty oil.
This Filter lasts a life time, and cools the motor oil as it works by the outside air flowing passed the finned filter. Fitment is as follows;
ALL HD BIG TWIN EVO's
ALL TWIN CAM's 1999 TO PRESENT
ALL SPORTSTER MODELS LATE 84' AND LATER

25-80 Reusable, lifetime oil filter, black. SOLD EACH
25-81 Reusable, lifetime oil filter, chrome. SOLD EACH
*** 25-25** Replacement Viton seal. SOLD EACH

B



C





D. *OIL FILTER ELEMENT FOR SUZUKI & ARCTIC CAT MODELS*

25-160 Oil filter element, Emgo# 10-79100. SOLD EACH



A



A. *STOCK REPLACEMENT DISPOSABLE OIL FILTER*

Fast & easy replacement. Even easier than a spin-on filter. Simply remove old filter, drop in the new filter, replace the cap and the job is done. no messy canisters to wash or parts to assemble.
These oil filters contain their own built-in relief valve system.

25-86 Fits all 74" & 80" models 1965 & later, except FLT & FXR. Also fits XL models 1954-1978. SOLD EACH

NOTE: The use of canister cap dip sticks used on 1970 & earlier FLH and XL models is not possible with this filter. We recommend removing the dip stick and checking the oil level visually with the filter removed.

B





Superior oil filtration. Hex nut for easy installation. Ready drilled for safety wiring. Extra engine protection. Meets or exceeds OE flow rates. Designed for today's synthetic oils.
SOLD EACH

K&N THE WORLD'S BEST AIR FILTER

B. *K&N OIL FILTERS*

MODEL / YEAR	PART NO.	OEM NO.	K&N NO.
Short filter. **TWIN CAM®** Sportster® 1980 thru early 1984. FL 1982 thru 1984. FXE 1982 thru 1984. FXEF 1985. FXWG 1983 thru 1986.	**25-145**	63782-80 & 63810-80A	KN-172C
Long filter. **TWIN CAM®** Softail® 1999-later. Dyna® 1999-later. FLT 1999-later. FLH 1999-later.	**25-146**	63731-99 63798-99	KN-171C
Short filter. **EVO** Sportster® Late 1984 thru 2001. FXR 1982 thru 1994. Softail® 1984-1999. FLT 1980 thru 1999. FLH 1980 thru 1999.	**25-151**	63805-80A 63805-80T 63806-83 63796-77	KN-170C
Extra long filter. Dyna® 1991 thru 1998.	**25-147**	63813-90	KN-173C
V-Rod.	**25-152**	63793-01K	KN-174C

C



C. *OIL FILTER MOUNTING KIT FOR USE WITH RUBBER HOSE*

Oil filter kit with OEM type filter mount. Designed for use with rubber hose in place of metal tube and fittings. Push-on fittings and filter included.

25-2 Oil filter kit with fittings for push-on rubber hose. SOLD AS KIT

A. *SLIMLINE OIL FILTER MOUNTS CHROME & BLACK FOR BIG TWIN '92-'99*

Billet oil filter mounts. SOLD AS KIT

25-111 Oil Filter Mount, Big Twin '92-'99, Chrome
25-112 Oil Filter Mount, Big Twin '92-'99, Black



A



B. *OIL FILTER MOUNT*

Oil filter mount, includes fittings. Fits 92'-99' Big Twins, OE#26381-92A. SOLD EACH

25-4 Chrome Oil Filter mount.
25-55 Black Oil Filter mount.



B



25-55

C *OIL FILTER / REGULATOR MOUNT KIT*

Chrome plated billet aluminum mount designed to locate both the oil filter and regulator off the front lower motor mount. Includes oil filter, fittings, and mounting hardware. Use replacement filter part No. **25-60**.

25-150 For Big Twin 1975 & later. SOLD AS KIT

C

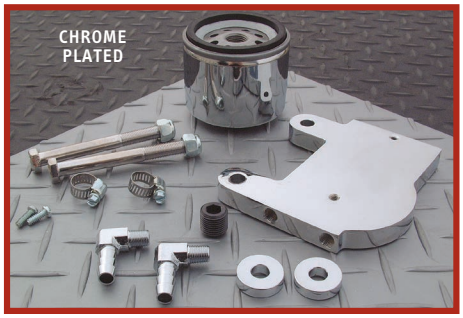

D. *ULTIMA® MINI OIL COOLER KITS*

Ultima® mini oil cooler kits come with the cooler, two 16" hoses, four clamps & four zip ties. Mini coolers measure 5" tall X 2" wide X 1" thick. Offered in black or chrome w/a heavy duty mounting tab for easy universal installation. MADE IN THE U.S.A.

73-33 Mini oil cooler kit, black. SOLD AS KIT
73-34 Mini oil cooler kit, chrome.

D





E. *CNC BILLET OIL COOLER KIT*

Oil cooler w/oil pressure guage. Made from billet aluminum and fits the following frame sizes: 1" dia., 1-1/8" dia., 1-1/4" dia., 1-1/2" dia.

73-59 Oil cooler kit w/oil pressure gauge. SOLD AS KIT

E



F. *FLT OIL SPOUT SPACER*

89-14 15/16" spacer for FLT oil spout/filler. Spaces filler spout out farther to clear a larger starter. Gaskets and hardware not included. SOLD EACH
77-884 93'-99 FLT Oil Filler Spout Gasket, OEM 62432-93. SOLD EACH

F

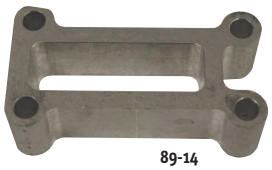

89-14

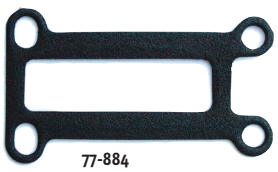

77-884

FINNED CHROME PLATED BILLET OIL COOLERS

TOP 4-1/8" WIDE

COOLING TUBE
1-1/8" WIDE
10-1/2" LONG
(DOES NOT INCLUDE BOTTOM STANDOFF CLAMPS)



A. *"DUAL COOL" & "DUAL COOL II"*

Same high quality as original Dual Cool only this one follows the front legs on most Big Twins. Mounts on highway bar cross bracket with vibration-resistant spacer. The Dual Cool II is longer, 24.5% more cooling fins than the original without sacrificing style.

NOTE: As with any oil cooler installation, you must check front fender clearance.

73-55 "Dual Cool II" chrome billet oil cooler. SOLD EACH



B. *STAINLESS STEEL OIL PRESSURE GAUGES*

These new oil pressure gauges are precision made to ISO standards. Each gauge is glycerin filled and tested for accurate readings. Outer case is made from stainless steel and internal parts are quality brass.

57-20 Black oil pressure gauge 60 PSI / 4Bar SOLD EACH
57-21 White oil pressure gauge 60 PSI / 4Bar

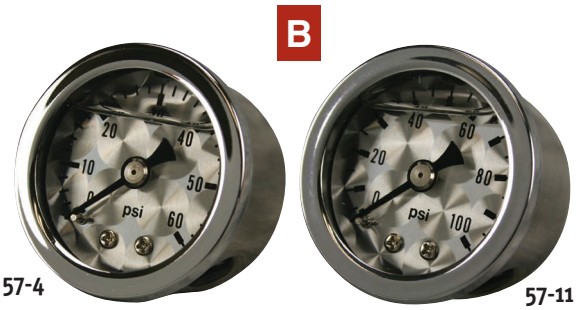

B. *OIL PRESSURE GAUGES*

Oil pressure gauges, "engine turned" faces, available in 60PSI & 100PSI. Liquid filled.

57-4 60PSI oil pressure gauge. SOLD EACH
57-11 100PSI oil pressure gauge.



C. *CHROME OIL PRESSURE GAUGE BRACKET*

Oil pressure gauge bracket fits Big Twin Evolution® 1984 & later.

21-321 Chrome plated mount. SOLD EACH

A. *OIL PRESSURE GAUGES & FITTINGS*

High quality liquid filled oil pressure gauges with 1/8" NPT male fitting on back. Can be used on any motorcycle when proper fittings are used. See below for fittings offered.

57-87 60 PSI oil pressure gauge. SOLD EACH
57-102 100 PSI oil pressure gauge.

Oil gauge fitting to fit H-D® 74" & 80" motors 1970 & later except motors with crossover pipes. Additional are fittings required. Kit comes with motor base fitting, O-ring and 45° fitting with 1/8 pipe female end.

21-180 Complete kit. SOLD AS KIT
21-182 Base only. SOLD EACH
21-183 45° Fitting only. SOLD EACH

Straight 1/8 pipe. Male x female adapter. Chrome plated brass.
21-184 SOLD EACH

1/8 Pipe, 90° street elbow. Male x female. Chrome plated brass.
21-185 SOLD EACH

1/8 Pipe, 90° female elbow. Brass.
21-186 SOLD EACH

Pipe 1/8" x 1-1/2" long, 1/8 pipe threads on both ends.
21-190 Chrome pipe. SOLD EACH

Pipe 1/8" x 3" long, 1/8 pipe threads on both ends.
21-191 Chrome pipe. SOLD EACH

NOTE: For Sportster® oil gauge mounting use part No. **21-185** and **21-186** fittings and part No. **21-190** or **21-191** pipe depending on length needed to extend gauge.


57-87


57-102

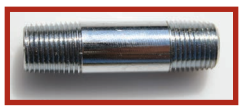
21-190


21-184

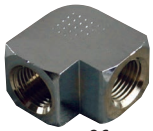
21-186


21-185


21-191

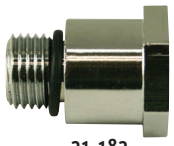
21-182


21-183

21-180

8

B. *OIL GAUGE MOUNTING KIT FOR EVOLUTION® BIG TWIN*

This kit brings the oil gauge into view by mounting a line to the rocker box. Complete with chrome plated adapters. Use with gauge part No. **57-87** or **57-102**.

21-211 Fits all Big Twin 1984 & later. SOLD AS KIT


B

C. *OIL GAUGE ADAPTER PLUG*

Replace the oil screen plug with this adapter and you now have an alternate location to mount an oil pressure gauge. Especially useful on alternator case shovelheads.

21-108 Oil gauge fitting SOLD EACH


C

D. *OIL GAUGE & SWITCH FITTINGS FOR EVO®*

One fitting lets you mount an oil gauge with the proper viewing angle in place of the stock electric switch. The other fitting is the same except you can run the gauge and retain the electric switch. (This way you can monitor oil pressure and still keep the warning light.) Use our part No. **57-87** 60 PSI or **57-102** 100 PSI oil gauges found on page 8-8/53.

21-237 Fitting for oil gauge only. SOLD EACH
21-238 Fitting for oil gauge when used with the electric switch (not shown).


D

21-238

ULTIMA® GASKETS

MW#	OEM#	DESCRIPTION	QTY.
OIL AND OIL PAN GASKETS/SEALS			
77-821	26072-90	OIL PAN GASKET, DYNA® 1991-1998, FOAMET	EA
77-822	26072-99	OIL PAN GASKET, DYNA® 1999-LATER, FOAMET	EA
77-823	26077-93	OIL PAN GASKET, FLT 1993-1998, FIBRE	EA
77-824	26077-99	OIL PAN GASKET, FLT 1999-LATER, FOAMET	EA

TWIN CAM® INDIVIDUAL REPLACEMENT GASKETS, SEALS, O-RINGS 1999-UP

IMPORT MW#	COMETIC MW#	COMETIC REF#	OEM REF#	APPLICATION	QTY
• **Intake and Exhaust Gaskets**					
	95-758	C9290	26995-86B	Intake Manifold Seal Carb Models 1999 -UP	10
• **Intake and Exhaust Gaskets**					
	95-758	C9290	26992-99	EFI Intake Manifold Seal EFI ONLY 1999 -UP	10
	95-759	C9088	27002-89	Carb.to Intake Manifold Seal All Models 1999-UP	1
• **Carb and EFI Gaskets**					
	78-544	C9626	29062-95	Twin Cam® Carb to Backing Plt. Gasket Carb Models 1999 -UP	10
	78-545	C9634	29313-95	Twin Cam® Air Filter Mnt. Gasket Carb Models 1999 - UP	10
	78-546	C9641	29368-99	EFI T/C Ind Module to Bck Plt Gasket 1999 -UP	10
	78-547	C9643	29463-99	EFI T/C Filter Element Gskt EFI Only 1999 -UP	10

1984-99 BIG TWIN EVO INDIVIDUAL REPLACEMENT GASKETS, SEALS, O-RINGS

IMPORT MW#	COMETIC MW#	COMETIC REF#	OEM REF#	APPLICATION	QTY
• **Intake and Exhaust**					
	95-759	C9088	27002-89	89' to Present Carb to Manifold Sealing Ring	1
	78-411	C9299	29242-83	84'-89 Intake to Head Compliance Fitting Gasket	10
	95-758	C9290	26995-86A	90'-99 Intake to Head Compliance Fitting Gasket	10

CARBURETOR GASKETS

COMETIC MW#	COMETIC REF#	OEM REF#	APPLICATION	QTY
	C9452	11107	66'-71 XL, 67'-70 Big Twin Tillotson Spacer O-ring	10
95-759	C9088	27002-89	88'-98 XL, 90'-99 Big Twin Keihin CV Seal Ring	1
78-402	C9417	27023-71	72'-E76, 79'-85 XL; 71'-75 Big Twin Bendix Manifold Gasket	10
78-403	C9425	27077-78	78'-89 Big Twin Kiehin Manifold Gasket	10
78-409	C9300	29058-77	L76'-87 XL, 76'-89 Big Twin Keihin air cleaner Gasket	10
78-410	C9301	29059-88	88'-98 XL, 90'-99 Big Twin Keihin CV Air Cleaner Gasket	20

INTAKE SEAL FOR SHOVELHEAD & PANHEAD

IMPORT MW#	COMETIC MW#	COMETIC REF#	OEM REF#	APPLICATION	QTY
• Intake and Exhaust Gaskets					
95-760		C9453	27060-55	55'-E78 Manifold to Head O-ring	10
	95-864	C9608	27062-78	L78'-84 Intake Seal Manifold to Head Rubber Band	10

BUELL® & EVO SPORTSTER®

IMPORT MW#	COMETIC MW#	COMTEIC REF#	OEM REF#	APPLICATION	QTY
• Intake and Exhaust Gaskets					
	95-758	C9290	26995-86A	84'-04 Intake manifold to Head/Seal	10
	95-759	C9088	27002-89	84'-04 Intake Seal to Carb	1

IRONHEAD SPORTSTER® KITS

IMPORT MW#	COMETIC MW#	COMETIC REF#	OEM REF#	APPLICATION	QTY
1957-85 XL IRONHEAD SPORTSTER® INDIVIDUAL REPLACEMENT GASKETS,SEALS, O-RINGS					
• Intake and Exhaust Gaskets					
95-760			27060-55	57'-78 Intake Manifold to Head O-ring (2)	10
	95-864	C9608	27062-78	79'-85 Intake Manifold to Head O-ring (2)	10
• Oil System Gaskets, O-rings and Seals					
95-703		11105		77'-85 Drain Plug O-ring (1)	10
95-369 ea		11105		77'-85 Drain Plug O-ring (1)	1

8

MISCELLANEOUS GASKETS FOR VARIOUS H-D® APPLICATIONS

MW#	OEM REF#	APPLICATION	QTY
78-406	27410-39	Intake manifold gasket for 1939 thru 1957 W, WL, G, U, UL & EL	10
78-407	27410-57	Intake manifold gasket for 1957 thru 1965 XL, XLH & XLCH	10

ULTIMA® GASKETS

MW#	OEM#	DESCRIPTION	QTY.
AIR CLEANER AND INTAKE MANIFOLD GASKETS/SEALS			
77-726	26995-86	INTAKE MANIFOLD SEAL 1986-LATER, RUBBER	EA
77-805	27060-55	INTAKE CLAMP SEALS, SHOVELHEAD 1966-1978	EA
77-806	27062-78	INTAKE CLAMP SEALS, SHOVELHEAD 1978-1984	EA
77-786	27002-89	KIEHIN CV CARB TO INTAKE MANIFOLD SEAL, 1984-LATER, RUBBER	EA
77-804	27023-71	BENDIX CARB TO MANIFOLD GASKET, SHOVELHEAD 1972-1985, FIBRE	EA
77-807	27077-78	KIEHIN CARB TO MANIFOLD GASKET, 1978-1989 BIG TWIN	EA
77-808	29058-77	KIEHIN CARB TO BACKING PLATE GASKET, BIG TWIN 1976-89, XL 1976-87, FIBRE	EA
77-809	29059-88	KIEHIN CV CARB TO BACKING PLATE GASKET, BIG TWIN 1990-99, XL 1988-98, FIBRE	EA
77-810	29062-95	CARB TO BACKING PLATE GASKET, TWIN CAM® CARB MODELS 1999-LATER	EA
77-811	29313-95	AIR FILTER MOUNTING GASKET, TWIN CAM® CARB MODELS 1999-LATER	EA
77-892	11291	MAP SENSOR SEAL, TWIN CAM® 1999-UP	EA
77-893	11292	AIR CLEANER BACKING PLATE TO HEAD O-RING, 1999-UP	EA
77-902	29583-01	AIR CLEANER BACKING PLATE TO CARB/EFI GASKET, 2001-UP	EA

Ignition Coils, Distributors Plug Wires



IGNITION PARTS & ACCESSORIES INCLUDING MAGNETOS, COILS, CONTACT POINTS, CONDENSERS, TUNE UP KITS, DISTRIBUTORS, & SPARK PLUGS.

ULTIMA® SINGLE FIRE PROGRAMMABLE IGNITION KIT



9

PROGRAMMABLE FEATURES (PC)

- Ingnition module can be used Single Fire or Dual Fire by switch and appropriate coil (Dual Fire Coil available separately)
- 8 Point fully definable wide open throttle curve.
- 8 Point fully definable part throttle curve.
- Rev limit programmable in 50 rpm steps.
- Programmable dead cranking revs 0 - 10.
- Programmable rear cylinder offset, total of +/- 10°.
- Programmable rev limiter.
- Separate programmable break-in rev limiter.

DATA RECORDING FEATURES

- Total engine hours.
- Time at wide open throttle.
- Number of engine starts (two minutes running time counts as one start).
- Longest time operating at wide open throttle.
- Maximum rpm.
- Seconds near rev limit.
- Statistical analysis of time at rpm.

Ultima® products offers the finest USA made electronic ignition system, packaged with the finest coil, at a very competitive price. These systems feature an industry standard electronic module with programmed curves suitable for all engines up to our monster 140 C.I. Other features: Intelligent overvoltage / overcurrent protection. Adjustable retard timing. Short circuit protection. Ignition kit includes single fire coil that puts out over 45,000 volts with fast rise times and high energy.

NOTE: Programmable features and data recovery features require programming software available as download*.

*Instructions included and available online @ www.ultimaproducts.com.

53-660	Complete Ultima® programmable ignition kit	SOLD AS KIT
53-644	Ultima® programmable ignition module only.	SOLD EACH
53-644K*	Ultima® programmable ignition module only. Pre programmed for kick start bikes. " 0 dead revs".	SOLD EACH
53-642	Programming Kit (USB port) for DFA & 2000i Apps for above ignitions. Programming link for ignition module sold seperately.	SOLD EACH
53-662	Programming link for ignition module.	SOLD EACH

ULTIMA® SINGLE/DUAL FIRE EXTERNAL PROGRAMMABLE IGNITION KIT



53-626
COMPLETE IGNITION KIT
(sold as pictured)

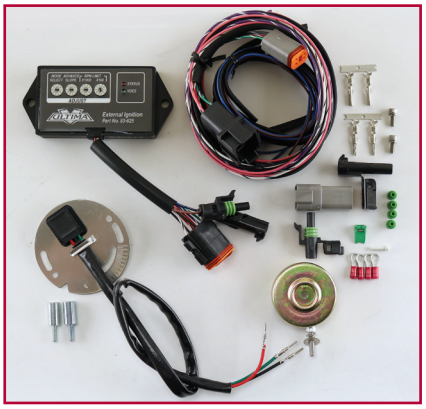

53-625
IGNITION MODULE.
(sold as pictured)

The Ultima® Complete External Ignition Kit is 50 states street legal (ARB E.O. No. D-641-1) for use with the following carbureted Harley-Davidson® motorcycles with a nose cone capable of accepting an ignition pick up assembly:

- All 1970-1999 Evolution 1340cc Big Twin
- 1971-2003 Sportster

Verify that you are using the supplied timing rotor or utilize the stock H-D® P/N 32402-83.
The Ultima® external ignition offers adjustable advance, adjustable RPM limit settings in 100 RPM increments, and switch selectable single or dual fire modes. Single fire mode improves starting, reduces the occurrence of backfiring at low RPM, and improves power at high RPM. A red status LED flashes when the engine reaches top dead center (TDC) and allows easy static timing. The status LED also provides diagnostic information.
A green VOES LED illuminates when the VOES (vacuum switch) input is active.

INCLUDED PARTS
All 53-625 kits include an Ultima® external ignition module, camshaft position sensor, adapter harness, mounting stand offs with screws, and a parts bag with 4 pin male/female connector/pins/sockets along with Packard Weather Pack connectors for single fire coil and tachometer hookup. All 53-626 kits have the same components as 53-625 plus an Ultima® Single Fire Coil and Ultima® universal plug wires.

*Instructions included and available online @ www.ultimaproducts.com.

53-626 Complete Ultima® external programmable ignition kit SOLD AS KIT
53-625 Ultima® programmable ignition module, pickup & rotor only.

ADVANCE UNIT ASSEMBLY & PARTS

FL, FLH, FX & XL 1970 & LATER and SPORTSTER® 1971 & LATER

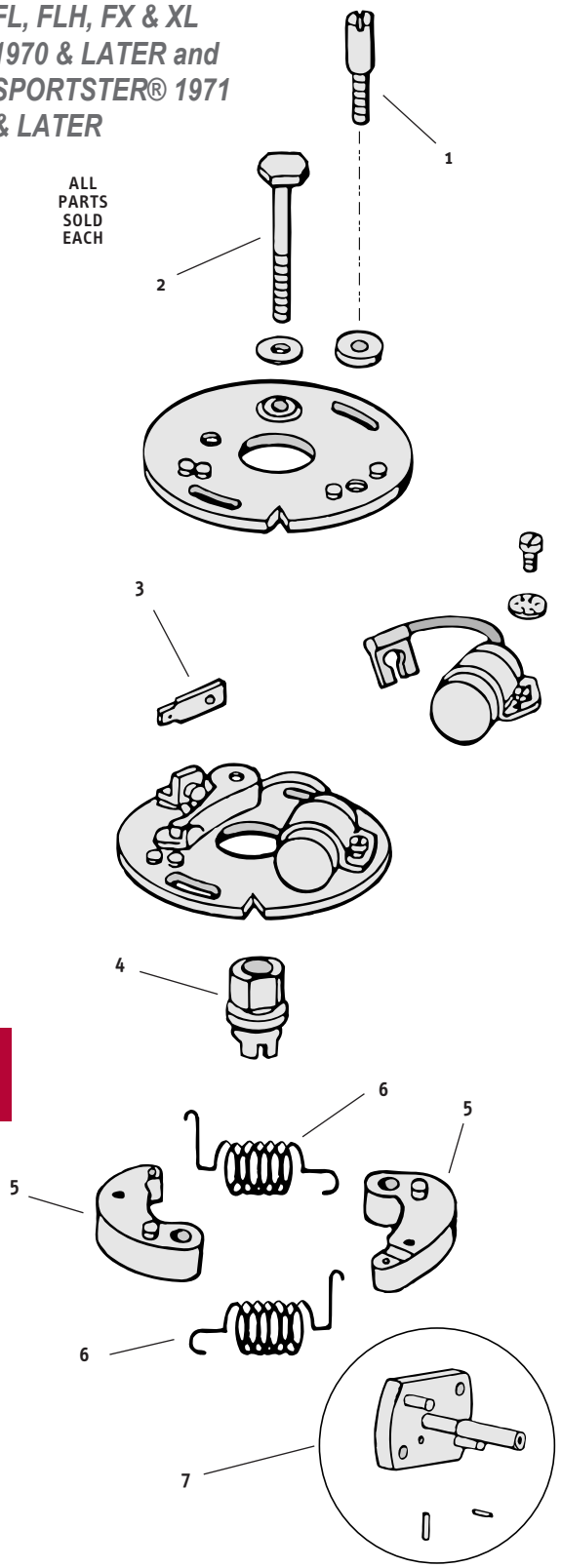

1	91-352	TIMER PLATE SCREW (OEM 32601-78) USE TWO
2	53-211	TIMER SCREW (OEM 3570)
3	53-207	CIRCUIT BREAKER TERMINAL ADAPTER (OEM 32670-70)
4	53-246	POINT CAM (OEM 32542-70A)
5	53-209	BREAKER ASSEMBLY WEIGHT (OEM 32522-70) USE TWO
6	53-208	BREAKER WEIGHT SPRING (OEM 32605-70) USE TWO
7	53-210	SHAFT & PLATE WITH PINS (OEM 32629-70)

A

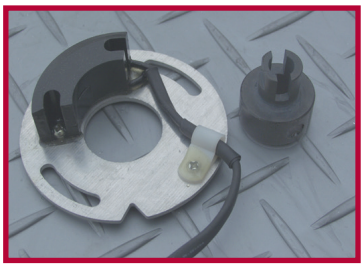

53-49

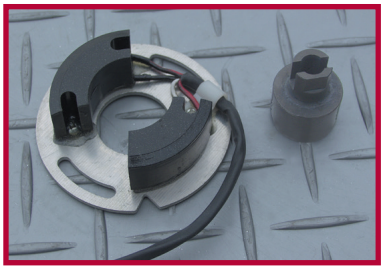

53-50

A. *ELECTRONIC IGNITIONS*

Fits Big Twin 1970 thru 1999 Evolution® and Sportster® 1971 thru 1995, when using mechanical advance unit part No. **53-245** or **53-244**. **Instructions available at www.ultimaproducts.com**

53-49* Dual fire ignition: same as stock,fires both plugs simultaneously. Use our part No. **53-452** coil or equivalent.
***Note:** Blue wire = power, White wire = trigger.

53-50 Single fire ignition: fires each cylinder individually — no power waste.
***Note:** Blue wire = power, White wire = trigger.

B

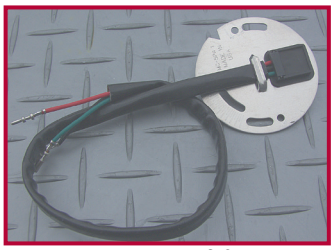

53-638



53-640

B. *BLUE STREAK IGNITION SENSOR PICKUP ASSEMBLIES*

PART NO.	OEM NO.	YEAR	MODEL
53-638 (Shown)	32400-80A	1980/1983	FLT.
		1980/1994	FXR.
		1984/1995	FXST.
		1980/1994	XL.
53-639	32404-90	1991/1995	Dyna®.
53-640	32400-94	1994 & 1995	FLT.
		1995/1997	XL.
		1998/2001	XL 1200S.

SOLD AS KIT

A

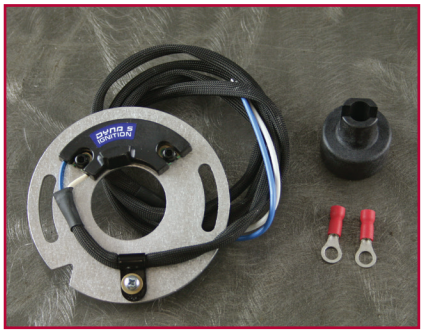

53-389

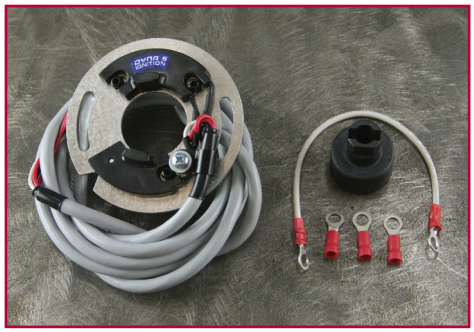

53-390

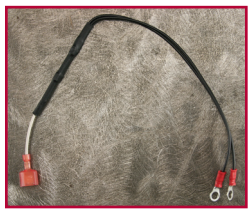

53-404

A. *DYNA S ELECTRONIC IGNITIONS*

These ignitions improve overall performance and provide perfect ignition timing once and for all. You only have to set it once, when it is installed. Dyna ignitions have been used by top drag and road racers to set new records and win numerous championships over the past decade. The Dyna S is a complete self-contained electronic ignition system built with the latest engineering design. This unit is completely housed behind the ignition cover and uses a magnetic rotor with the original spark advancer, so the factory advance curve is maintained. The Dyna S, available in single or dual fire versions, is factory warranted for three years.

Fits Big Twin 1970 and later and Sportster® 1971 & later with mechanical advance unit.

NOTE: Please purchase part No. **53-404** tach adapter to retain tachometer when using single fire ignition system.

53-389	Dual fire ignition system.	SOLD EACH
53-390	Single fire ignition system	
53-404	Tach adapter.	

B. *DYNA 2000 DIGITAL IGNITION SYSTEM*

The Dyna 2000 digital ignition system for H-D®, which has become the standard for performance and versatility in the H-D® aftermarket, has been enhanced to include even more features. there are two new modules available, the DD2000-HD1E, which operates in single fire or dual fire modes and the DD2000-HD2E, which operates in dual fire only. these new modules include expanded advance curve functionality with the option to use vacuum advance compensation via a VOES switch. The new modules also include a special Retard Mode for use with turbocharged and nitrous bikes. **NOTE:** Programmable features and data recovery features require programming kit sold below
The Dyna 2000 allows selection between four different advance curves. The new modules offer a quick curve which simulates a mechanical advancer for hot rod motors. There are also four independent rev limiter settings from 6000 to 7500 rpm. The new retard mode allows selection of ignition retard of 5, 7, or 10 degrees upon activation of retard input.
Dyna 2000 ignition modules use the stock factory pick-up and simply plug into the existing factory wiring harness on 1991 & later bikes. An extension harness is available for installing the Dyna 2000 on 1990 & earlier bikes. The modules should be used with coils in the range of 2.5 to 3 ohms primary resistance and hould run with carbon core type supression spark plug wires. The Dynatek DD2000 digital systems can be used with your stock coil, but Dynatek recommends Dyna® ignition coils with matching ignition wires for better results and maximum performance.

9

B



53-399

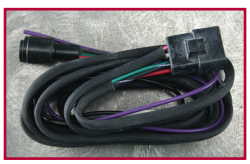

53-401

53-399	Ignition system, single / dual fire, 7 pin.	SOLD EACH
53-419	Ignition system, single / dual fire, 8 pin.	
53-400	Ignition system, dual fire, 7 pin.	
53-420	Ignition system, dual fire, 8 pin.	
53-401	Extension harness.	

These Dyna® Programming kits must be used to access programmable features and data recovery on the above ignition systems.

53-658 Programming kit for above part No. **53-399, 53-400.**

SOLD EACH

53-659 Programming kit for above part No. **53-419, 53-520.**

A. *DYNA 3000 DIGITAL IGNITION FOR VT1100C SPIRIT '97-UP*

FEATURES

- Eight selectable advance curves
- Selectable rev limits (increase rev limits over stock)
  Status LED: indicates power-up, pickups, TPS (throttle position sensor) operation and MAP sensor operation (applicable models only)
- Easier starting
- Plug-and-ride, 5-minute installation (on most models)
- Uses all factory sensors
- Mounts directly to factory location
- Uses factory coils or Dyna coils
- Reverse battery protection
- Retard mode for nitrous or blower applications

53-701 Ignition system for VT1100C Spirit SOLD EACH



B. *DYNA 2KiP IGNITION FOR H-D®*

The dual featured D2KiP has all the selectable features of its predecessor, the D2Ki. Other features: Intelligent overvoltage / overcurrent protection. Adjustable retard timing. Short circuit protection. **NOTE:** Programmable features and data recovery features require programming kit sold below.

PROGRAMMABLE FEATURES (PC)

- 8 Point fully definable wide open throttle curve.
- 8 Point fully definable part throttle curve.
- Rev limit programmable in 50 rpm steps.
- Programmable dead cranking revs 0 - 10.
- Programmable rear cylinder offset, total of +/- 10°.
- Programmable rev limiter.
- Separate programmable break-in rev limiter.

DATA RECORDING FEATURES

- Total engine hours.
- Time at wide open throttle.
- Number of engine starts (two minutes running time counts as one start).
- Longest time operating at wide open throttle.
- Maximum rpm.
- Seconds near rev limit.
- Statistical analysis of time at rpm.

53-520 1970 Thru 1998 carbureted models, module only. SOLD EACH
53-521 1970 Thru 1998 carbureted models, single plug, single fire kit of module and pair of part No. **53-394** coils. SOLD AS KIT
53-522 1970 Thru 1998 carbureted models, dual plug, single fire kit of module and pair of part No. **53-392** coils. SOLD AS KIT
53-598 1970 Thru 1998 carbureted models, single plug, single fire kit of module and part No. **53-591** (miniature) coil. SOLD AS KIT
53-642 USB Programming Kit DFA & 2000i Apps for above ignitions.

B



53-520



53-598

DYNA



53-521

C



53-597



53-691

C. *DYNA PROGRAMMABLE DIGITAL IGNITION SYSTEM FOR TWIN CAM 88™*

These Dyna ignitions are Single Fire, fully programmed performance ignitions with 16 programmable advance curves and 8 Rev. Limiter settings. All functions feature full digital accuracy and full J1850 compatibility with all stock devices. Coil compatibility from stock to performance (less than 1 ohm resistance). Coil current constantly monitored to provide constant full spark energy. Utilizes all stock sensors, stock OE connectors and the stock OE mounting. Reverse battery and spike protection are also built in and these ignitions feature a 1 year warranty.

53-597 For 1999-2003 Twin Cam 88™ carb models. SOLD EACH
53-690 Fits 2004-2006 Twin Cam® carb models.
53-691 Fits 2004-2005 XL carb models.

A



B





C

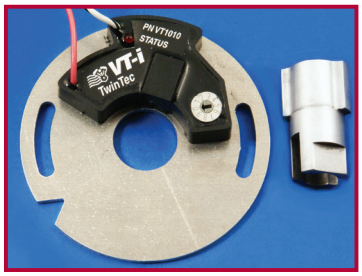

D

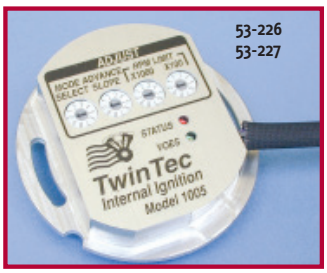



53-227 Twin Tec Internal Ignition Model 1005S. For 98'-02' Sportster® except 1200S - includes harness for single fire conversion. SOLD EACH

53-231 Internal Ignition Kit, includes 1005 ignition, single fire coil and universal wire set. SOLD AS KIT

53-232 Internal Ignition Kit, includes 1005S ignition, single fire coil and universal wire set. **Fits XL's.** SOLD AS KIT

A. *DAYTONA TWIN TEC IGNITION FOR 2003-2006 H-D CARBURETED MOTORS*

Features
- Wide timing advance adjustment range
- Digitally set RPM limit
- Full support for J1850 data bus
- Built-in data logging
- Compatible with H-D scan tool

NOT LEGAL FOR SALE OR USE in the State of California

53-235 Plug-in ignition for 03'-06' carbureted Twin Cam® and Sportster® with 12 pin ignition module. SOLD EACH

B. *DAYTONA TWIN TEC IGNITION FOR 1999-LATER CARRBURETED TWIN CAMS®*

Features
- Two 12 pin connector
- Five rotary switches to set operating modes, timing, advance and RPM limit
- Communicates basic diagnostic information by blinking codes on the check engine LED

NOT LEGAL FOR SALE OR USE in the State of California

53-234 Plug-in ignition for 99'-03' carbureted Twin Cam®. SOLD EACH

53-233 Twin Cam® ignition kit, includes TC88 ignition (**53-234**), Twin Cam® coil and universal wire set SOLD AS KIT

C. *DAYTONA TWIN TEC VT-I ELECTRONIC IGNITION SYSTEM*

Features:
- Ultra reliable dual fire electronic ignition system For all Harley Davidson® V-twin engines except early magneto type and 1999 & later Twin-Cam®.
- Includes special trigger rotor for use with traditional mechanical advance mechanism (supplied by customer)
- Precise digitally set RPM limiter (200 RPM steps from 5,200 to 7,000 RPM)
- Operates down to below 6 volts for reliable starting under all conditions, including kick start.

NOT LEGAL FOR SALE OR USE in the State of California

53-239 VT-i Electronic Ignition System for Harley-Davidson® V-Twin engines. Not legal for use or sale on pollution controlled vehicles. SOLD EACH

D. *DAYTONA TWIN TEC INTERNAL IGNITIONS*

Features
- Two advance curve families with adjustable advance slope accomodate stock to highly modified engines.
- Digitally set RPM limit
- Selectable single or dual fire mode

NOT LEGAL FOR SALE OR USE in the State of California

53-226 Twin Tec Internal Ignition Model 1005. For 84'-99' Evo, 71'-97' Sportster® and 70'-84' Shovelhead. SOLD EACH

A. *DAYTONA TWIN TEC EXTERNAL IGNITIONS*

Features
- Two advance curve families with adjustable advance slope accomodate stock to highly modified engines.
- Digitally set RPM limit
- Selectable single or dual fire mode

53-228 Twin Tec External Ignition Model 1006. For 90'-94' Evo and 90'-93' Sportster® with 7 pin Cannon plug. **SOLD EACH**

53-229 Twin Tec External Ignition Model 1007. For 95'-98' Evo and 94'-97' Sportster® with 8 pin Deutsch plug. **SOLD EACH**

53-259 External Ignition Kit, includes 1006 ignition, single fire coil and universal wire set. **SOLD AS KIT**

53-260 External Ignition Kit, includes 1007 ignition, single fire coil and universal wire set. **SOLD AS KIT**

B. *DYNA "S" ELECTRONIC IGNITION & COILS KITS*

The Dyna "S" Ignition & Coil is now available as a kit. Kit features the Dyna "S" electronic ignition for dual or single fire ignitions and a Dyna coil. This is the same ignition used by top drag racers and road racers to win numerous victories and set records over the past decade. The Dyna "S" is completely housed behind the ignition cover and uses a magnetic rotor with the spark advancer, so the factory advance curve is maintained. Dyna coils produce high voltage (30,000 plus) with fast rise times and high energy.

53-500 Dyna "S" Ignition & Coil kit Fits all models 1970 & later with dual fire ignitions. Stock type 5 ohm coil. **SOLD AS KIT**

53-501 Dyna "S" Ignition & Coil kit. Fits all models 1970 & later with single fire ignitions. Single tower 5 ohm coil (pair).

C. *INDUCTIVE IGNITION SYSTEM*

The Dual Fire Inductive Ignition System is a single module, single coil **DUAL FIRE** system. The Single Fire Inductive Ignition System is a dual module, dual coil system. Both of these systems can be used with any high quality coil with 2-3 ohms primary resistance.

53-244 Midwest automatic advance unit for use on pointless ignition. Includes shaft and plate with pins, weights and springs. **SOLD EACH**

YEAR	MODEL	DESCRIPTION
1971/1979	Big Twin	Converts from point-triggered to
1970/1979	Sportster®	electronic ignition.
1980/1991	Big Twin	Replaces stock electronic ignition
1980/1991	Sportster®	and eliminates external module and rev limiter. Requires the installation of mechanical advance assembly (not included).

A

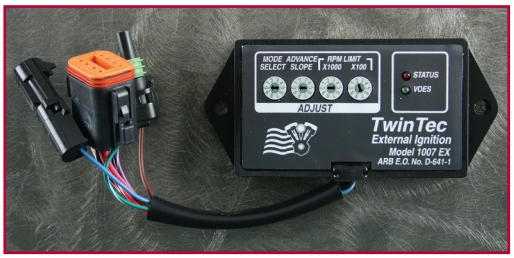

53-229





B

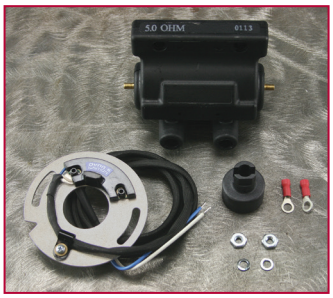

53-500

DYNA

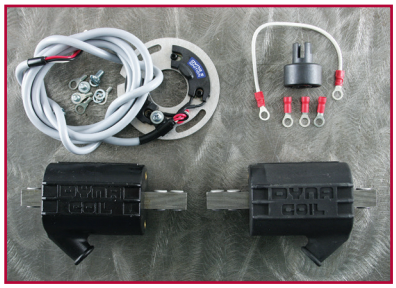

53-501

C

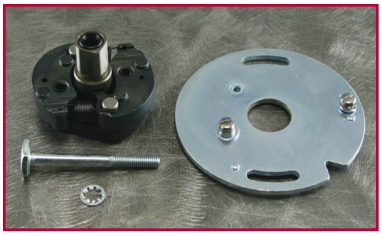

A



A. *TWIN SCAN II*

53-236 Twin Scan II for 01'-07' fuel injected models with Delphi System, including V-Rod and 03'-06' carbureted models with 12 pin ignition module. SOLD EACH

Features
- Compatible with 01'-07' HD fuel injected models with Delphi System (including V-Rod) and 03'-06' carbureted models with 12 pin ignition module.
- Uses laptop PC for display, includes Windows software
- Real time display of engine data on instrument panel type display.
- Built-in data logging.

B



B. *TWIN SCAN III*

53-427 Twin Scan III for 2011-2012 Softails® and 2012 Dyna® models with CAN bus. Includes USB cable and software. SOLD EACH

Features
- Compatible with 2011-2012 Softails® and 2012 Dyna® with CAN data bus.
- Uses laptop PC for display.
- Real time display of engine data on instrument panel type display.
- Built-in data logging.

CHROME PLATED

C



70-120



70-123

C. *DISTRIBUTORS*

A complete plated distributor. This top quality distributor features automatic advance, late style points and condenser for performance & reliability. Complete with drive gear, points, condenser, breaker-to-coil wire, terminal adapter and chrome plated cap.

BIG TWIN

70-120 Use as a direct replacement for 1936 thru 1969 Big Twin by using hold down clamp part No. **53-151** included in kit. SOLD EACH

70-123 Complete distributor with 2 hole mount just as original.

A. *IGNITION ROTOR*

53-528 Electronic ignition rotor. Fits Big Twin & XL models, except fuel injection equipped, 1983 & later. OEM 32402-83. SOLD EACH

53-529 Ignition rotor screw. OEM 2611B/C. SOLD EACH

91-352 Timer plate screw (OEM 32601-78) SOLD EACH

A


53-529

53-528

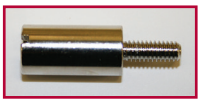
91-352

B. *EARLY H-D® IGNITION POINTS SET*

53-135 Fits : EL 36-47 / FL41-47 / VL 30-35 / W 36-47 HD models.

B



NEW!

C. *IGNITION POINTS FOR H-D®*

53-16 For all Big Twins 1930 thru 1947. OEM 32658-30. SOLD AS SINGLE SET

53-13 For all Big Twins 1948 thru 1969, Sportster® & K Model 1954 thru 1970 and all 45" 1948 & later. OEM 30605-48A.

53-12 For all Big Twins & Sportster® 1970 & later. OEM 32661-70.

53-20 For XLCH with magneto 1958 thru 1969. OEM 29533-55A.

C


53-20

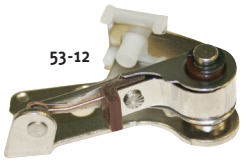
53-12

D. *H-P BLUE STREAK IGNITION POINTS & CONDENSER KIT*

High performance point set & condenser kit Includes part No .**53-387** & **53-388** below. These high performance, heavy duty components which are famous in the auto racing industry are now available for Harley-Davidson® motorcycles.

53-418 Blister packed points and condensor kit. SOLD AS KIT

53-387 Point set. Fits Big Twin 1970 thru early 1978 and Sportster® 1971 thru early 1978. Replaces OEM 32661-70. SOLD AS SET

53-388 Condenser. Fits Big Twin 1930 thru early 1978 and Sportster® (except with magneto) 1954 thru early 1978. Replaces OEM 32726-30A and 30802-47. SOLD EACH

D


53-387

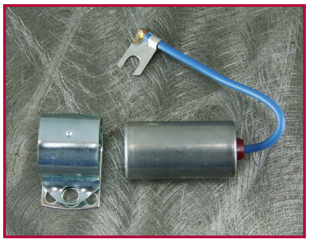
53-388

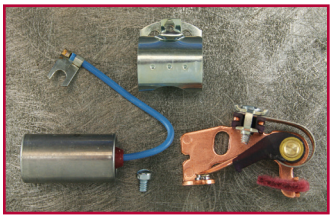
53-418

9

E. *COMPLETE ADVANCE UNIT*
BIG TWIN AND SPORTSTER® 1971 & LATER

Complete advance unit including points, condenser, wire & clips.

53-242 For FL, FLH, FX, 1970 & later and Sportster® 1971 & later. May be used on late 1978 & later H-D® twins with electronic ignition for conversion to points. SOLD AS KIT

53-244 For use on pointless ignition. Includes shaft and plate with pins, weights & springs.

E


53-242

F. *ADVANCE UNIT WITH BEARING*

New design for auto advance unit incorporates roller bearing at pivot points for smooth and positive advance everytime, all the time. Also includes 3 sets of different tension springs for variable advance rate. Fits Big Twin 1970 & later and Sportster® 1971 & later, when point type ignitions are used.

53-384 Advance unit; complete kit. SOLD AS KIT

53-385 Weights with bearing. Can only be used on part **53-384** above. SOLD AS PAIR

53-245 Advance unit for use on pointless ignition. Includes shaft and plate with needle bearing weights and three sets of springs. SOLD AS KIT

F

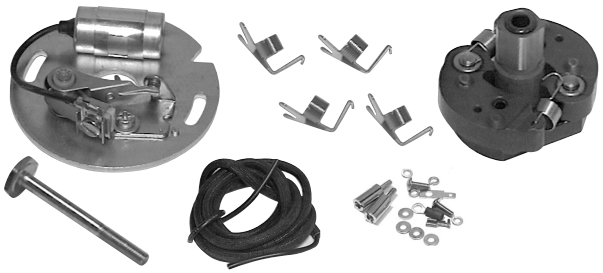









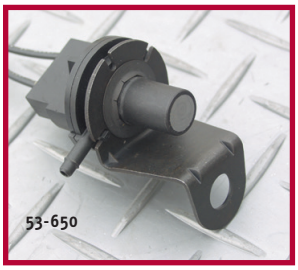



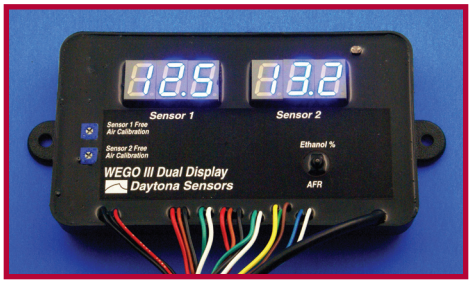

53-471

- Input for optional customre supplied flex fuel sensor. A switch under the sensor 2 LED allows selection of normal AFR display or 0-100% ethanol display.

NOT LEGAL FOR SALE OR USE in the State of California

53-471 WEGO 3 System with AFR display
53-472 WEGO 3 System with Lambda display

A. *MAGNETO CLAMP*

Another item that is a must for H-D® magneto conversions is this magneto hold down clamp. Made of high grade steel, this clamp provides trouble free installation.

53-151 For Sportster® 1971 & earlier and Big Twin 1969 & earlier. **SOLD EACH**

B. *MAGNETO CAP COVER GASKET*

U.S.A. MADE magneto caps and gasket.

78-412 Cap cover gasket. OEM 29550-55. **SOLD AS PKG OF 10**

C. *CONDENSER & POINTS FOR MAGNETOS*

53-21 Condenser for all magnetos. **SOLD EACH**
53-20 Point set for magnetos part No. **70-115**, **70-116** & **70-119**. **SOLD AS SET**

D. *BLUE STREAK VOES*

VACUUM OPERATED ELECTRICAL SWITCHES

DIRECT OEM REPLACEMENTS

PART NO.	OEM NO.	YEAR	MODEL
53-650	26558-84	1986/1993	All Sportsters®.
		1984/1990	FXST.
		1986/1989	FLT.
53-651	26557-83	1983/1985	XL, XLS & XLX.
		1984/1990	All FXR.
53-652	26566-91	1991/1995	All FXST & FLST.

SOLD EACH

SELF ASSEMBLY KITS

53-653 Set at 3" of mercury. **SOLD EACH**
53-654 Set at 4" of mercury.
53-655 Set at 5" of mercury.
53-656 Set at 6" of mercury.

High quality **U.S.A. MADE** vacuum operated electrical switches for use as direct replacements or custom bike building.

E. *DAYTONA TWIN TEC TWIN TUNER FUEL INJECTION CONTROLLER*

Features

- Allows easy fuel trim adjustments to increase horsepower and throttle response.
- Makes adjustments to match the requirements of performance camshafts, free flowing exhaust, low restriction air filters, etc.
- Easy plug-in installation and setup.

NOT LEGAL FOR SALE OR USE in the State of California

53-238 Twin Tuner fuel injection controller, for 2001-2007 Twin Cam® 88 with Delphi system.

F. *WEGO 3 DUAL DISPLAY WIDE BAND AIR/FUEL RATIO SYSTEM*

Features

- Displays Lambda or correct AFR values for any hydrocarbon fuel with a known stoichiometric ratio.
- Versatile tuning aid for all carbureted and fuel injected motors. Displays AFR and logs over 2 hours of data. Including two channels of AFR, engine RPM, and a spare 0-5V analog input for sensors such as throttle position or manifold pressure.

A. *DAYTONA TWIN TEC TWIN TUNER 2 FUEL INJECTION CONTROLLER*

- Has all the features of the original Twin Tuner and includes ignition timing control capability.
- Can use your Dynojet Power Commander maps.

NOT LEGAL FOR SALE OR USE in the State of California

53-270 Twin Tuner 2 fuel injection & ignition controller, for 2001-2011 Twin Cam® 88 with 36 pin Delphi system.

53-271 Twin Tuner 2 fuel injection & ignition controller, for 2008-2012 Twin Cam® touring models with 73 pin Delphi system.

A



B. *TCFI 4 FUEL INJECTION CONTROLLER*

Features

- Simultaneously auto-tune fuel curves for front and rear cylinders under actual riding conditions with new WEGO IIID dual channel wide-band oxygen sensor interface
- Fully programmable plug-in replacement for 36 pin Delphi® controller. Not compatible with 2008-2012 touring models with electronic throttle control, or 2011-2012 Softail® and 2012 Dyna® models with CAN data bus.
- Robust alpha-N fuel control eliminates problems with long duration/high overlap camshafts
- Powerful Windows software for custom programming and data analysis
  - Full support for J1850 data bus used for communications with turn signal security module (TSM/TSSM) and instrument cluster on 2004-2012 models.
  - Supports for new 6th gear indicator on 2007-2012 models.
  - Supports all sensors including theft/security module.

NOT LEGAL FOR SALE OR USE in the State of California

53-426 Fits 2001-2011 Twin Cam® using 36 pin Delphi System with J1850 data bus. Not compatible with 2008-2012 touring models or 2011-2012 Softails®.

B



9

C. *TCFI 6 FUEL INJECTION CONTROLLER*

Features

- Fully programmable plug-in replacement for the 73 pin controller with J1850 data bus used on 2008-2013 touring models with electronic throttle controller.
- Offers real-time and continuous auto-tuning with monitoring, control and override
- Built in extended data logging that helps you diagnose real world problems. Data FLASH memory stores full 60 minutes of operating data at 10 samples/second.
- Two programmable user inputs for functions such as two stage RPM limiter, nitrous retard, and shift kill.
- Two programmable user outputs for functions such as shift light, nitrous activation, and electric shifter.
- Easy to install. Just replace stock ECM and O2 sensors and follow the detailed instructions.

NOT LEGAL FOR SALE OR USE in the State of California

53-470 TCFI 6 Fuel Injection Kit for 2008-2013 touring models with J1850 data bus.

C



A



A. *DAYTONA TWIN TEC FUEL INJECTION CONTROLLER*

Features
- Simultaneously auto-tune fuel curves for front and rear cylinders under actual riding conditions with new WEGO IIID dual channel wide-band oxygen sensor interface
- Fully programmable plug-in replacement for Delphi® controller
- Robust alpha-N (throttle position and RPM based) fuel control eliminates problems with long duration/high overlap camshafts
- Full support for SAE J1850 data bus used on 2004-2008 models
- Powerful Windows software for custom programming and data analysis
- Data logging and diagnostics

NOT LEGAL FOR SALE OR USE in the State of California

53-425 TCFI III Fuel Injection Kit, fits 2001-2008 Twin Cam® 88 with Delphi system. Kit includes TCFI III Plug-in fuel injection controller, USB interface for PC link, WEGO IIID Dual Channel wide-band exhaust gas oxygen sensor interface, two Bosch LSU 4.2 wide-band exhaust gas oxygen sensors, and two 18 x 1 .5mm weld nuts for exhaust pipe.

B



B. *USB INTERFACE FOR ALL DAYTONA TWIN TEC ENGINE CONTROLS*

Features
- Includes all required adapters for Daytona Twin Tec systems 53-226, 53-229, 53-234, 53-235 and 53-425
- Compatible with all Daytona Twin Tec software and Windows 98/ME/XP. Software drivers included on CD ROM.

53-237 USB interface. **SOLD EACH**

C

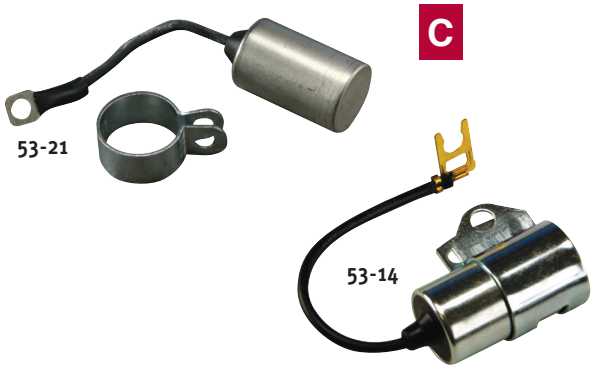

C. *CONDENSERS FOR H-D®*

All Midwest condensers meet or exceed original equipment manufacturer's specifications.

53-15 For all Big Twins 1930 thru 1948. OEM 32726-30.

53-14 For all Big Twins 1949 & later, Sportster®, K Model, with battery ignition, all years. OEM 32726-30A.

53-21 For Sportster® 1958 thru 1969, with magneto ignition. OEM 29534-55A.

9

ULTIMA® COILS

DUAL FIRE STOCK STYLE REPLACEMENT COILS

SOLD EACH

53-315 Black coil. Fits Big Twin 1965-1979. OEM 31609-65A.
53-430 Chrome coil. Fits Big Twin 1965-1979. OEM 31609-65A.

53-316 Black coil. Fits Big Twin 1980-1984 Electronic ignition. OEM 31609-80.
53-431 Chrome coil. Fits Big Twin 1980-1984 Electronic ignition. OEM 31609-80.

53-317 Black coil. Fits Big Twin late 1983-later. OEM 31614-83.
53-432 Chrome coil. Fits Big Twin late 1983-later. OEM 31614-83.


53-315

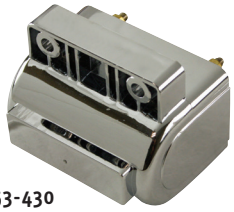
53-430


53-316

HIGH PERFORMANCE STOCK REPLACEMENT COILS

30,000 volt coil adds 20% peak spark voltage.
Mounts in stock location.

SOLD EACH

53-29 Fits Big Twin 1965-1979. OEM 31609-65A.
53-438 Same as **#53-29**, except in a compact square configuration.
53-230 Fits Big Twin 1980-1984 Electronic ignition. OEM 31609-80.
53-439 Same as **#53-230**, except in a compact square configuration.
53-297 Fits Big Twin late 1983-later. OEM 31614-83.
53-440 Same as **#53-297**, except in a compact square configuration.
53-434 Black Single fire high performance 12V coil. 40,000V, 3 OHM primary resistance. Mounts to stock bracket and fits under most coil covers.
53-441 Chrome Single fire high performance 12V coil. 40,000V, 3 OHM primary resistance. Mounts to stock bracket and fits under most coil covers.
53-433 Fits Twin Cam®(carburetor only) models 1999-up. OEM 31655-99 OE style, .6 OHM. Greater than 50mJ and 40,000V for high performance.
53-435 Fits Twin Cam® EFI models 2001-2006. OEM 31743-01.
53-436 Fits Twin Cam® models 2007-2013. OEM 31696-07A.
53-437 Fits Sportster® models 2007-2013. OEM 31656-07.


53-317


53-432

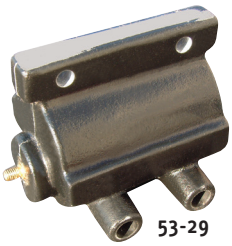
53-29

53-438



53-230


53-439

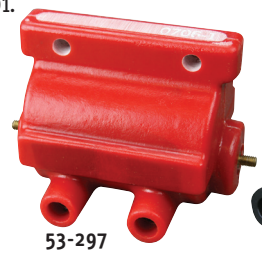
53-297


53-440


53-434


53-433


53-435


53-441

9

53-480 Coil, EFI 95-98, OE 31639-95
53-481 Coil, EFI 99-01, OE 31639-99
53-482 Coil, Softail® FXC/W 08-10, OE 31684-08
53-483 Coil, Softail® FXC/W, FXS, FXSB, 11-16 OE 31684-11

53-530* Coil, 2017 & up Milwaukee-Eight 107 & 114, OE 31600017


53-480


53-530


53-481


53-482


53-483


53-436


53-437

A



A. *HIGH PERFORMANCE 45,000 VOLT SINGLE FIRE COIL*

Single fire coil mounts in the stock location and will fit under most coil covers. Use with ignitions that require a 2-3 ohm primary resistance. More horsepower, no high rpm break-up. 45,000 Volts.

53-632 12 Volt single fire coil. SOLD EACH



B

BLACK OR CHROME

53-450

B. *REPLACEMENT COILS*

Except for part No. **53-51**, these coils have the same electrical specifications as OEM, but the physical appearance of these coils is the same as OEM 31614-83.

APPLICATION	OEM NO.	BLACK	CHROME
All Big Twin 1965/1979	31609-65A	**53-450**	**53-453**
All Big Twin 1980/E. 1983	31609-80	**53-451**	**53-454**
All Big Twin L. 1983/1998 and FXST 1999 & earlier.	31614-83	**53-452**	**53-455**
All Big Twin 1999 & later, Sportster® 2004 & up and FXST 2000 & later, carburetor only.	31655-99	**53-51**	N/A

SOLD EACH

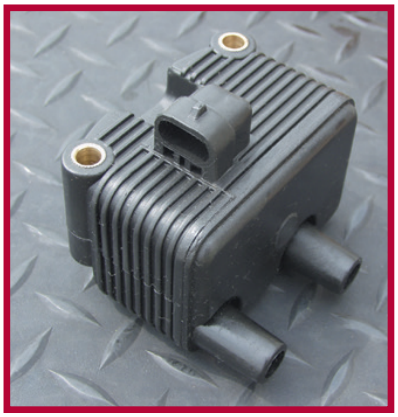

53-51

C. *DAYTONA TWIN TEC COILS*

53-258 High-output Twim Cam coil

Features
- Fits most 99' and later carbureted models
- Same size as OEM P/N 31655-99 and 31704-99
- Greater than 50 mJ and 40,000V output

53-257 3 ohm single fire coil

Features
- Fits stock bracket and covers
- Great value!



C



9

A. *DYNA® IGNITION COILS*

These high tech, top quality coils are designed for maximum performance. They produce spark voltages in excess of 30,000 volts and spark energies second to none. Dyna® coils are made to replace stock coils. Choose from three configurations and three variations of resistance for different applications. Dyna® coils work with point ignitions, aftermarket electronic ignitions and factory electronic ignitions.

FOR DUAL FIRE IGNITION

Dual plug heads — race or street.

53-393 Dual tower, 1.5 ohm, Brown. Mfg. # DC2-1. SOLD AS PAIR

Single plug heads — street.

53-397 Dual tower, 5.0 ohm, Black. Mfg. # DC8-1. SOLD AS PAIR
53-396 Stock style, 5.0 ohm, Black. Mfg. # DC7-1. SOLD EACH

Single plug heads — race.

53-392 Dual tower, 3.0 ohm, Green. Mfg. # DC1-1. SOLD AS PAIR
53-395 Stock style, 3.0 ohm, Green. Mfg. # DC6-1. SOLD EACH

FOR SINGLE FIRE IGNITION

Dual plug heads — race

53-392 Dual tower, 3.0 ohm, Green. Mfg. # DC1-1. SOLD AS PAIR
53-395 Stock style, 3.0 ohm, Green. (Two coils required). Mfg. # DC6-1. SOLD EACH

Dual plug heads — street.

53-397 Dual tower, 5.0 ohm, Black. Mfg. # DC8-1. SOLD AS PAIR
53-396 Stock style, 5.0 ohm, Black. (Two coils required.) Mfg. # DC7-1. SOLD EACH

Single plug heads — race.

53-394 Single tower, 3.0 ohm, Green. Mfg. # DC3-1. SOLD AS PAIR

Single plug heads — street.

53-398 Single tower, 5.0 ohm, Black. Mfg. # DC10-1. SOLD AS PAIR

FOR ELECTRONIC DYNA® 2000 IGNITION SYSTEM

Dual fire with single plug heads.

53-392 Dual tower, 3.0 ohm, Green. Mfg. # DC1-1. SOLD AS PAIR
53-395 Stock style, 3.0 ohm, Green. Mfg. # DC6-1. SOLD EACH

Dual fire with dual plug heads.

53-393 Dual tower, 1.5 ohm, Brown. Mfg. # DC2-1. SOLD AS PAIR

Single fire with single plug heads.

53-394 Single tower, 3.0 ohm, Green. Mfg. # DC3-1. SOLD AS PAIR

Single fire with dual plug heads.

53-392 Dual tower, 3.0 ohm, Green. SOLD AS PAIR
53-395 Stock style, 3.0 ohm, Green. (Two coils required). Mfg. # DC6-1. SOLD EACH

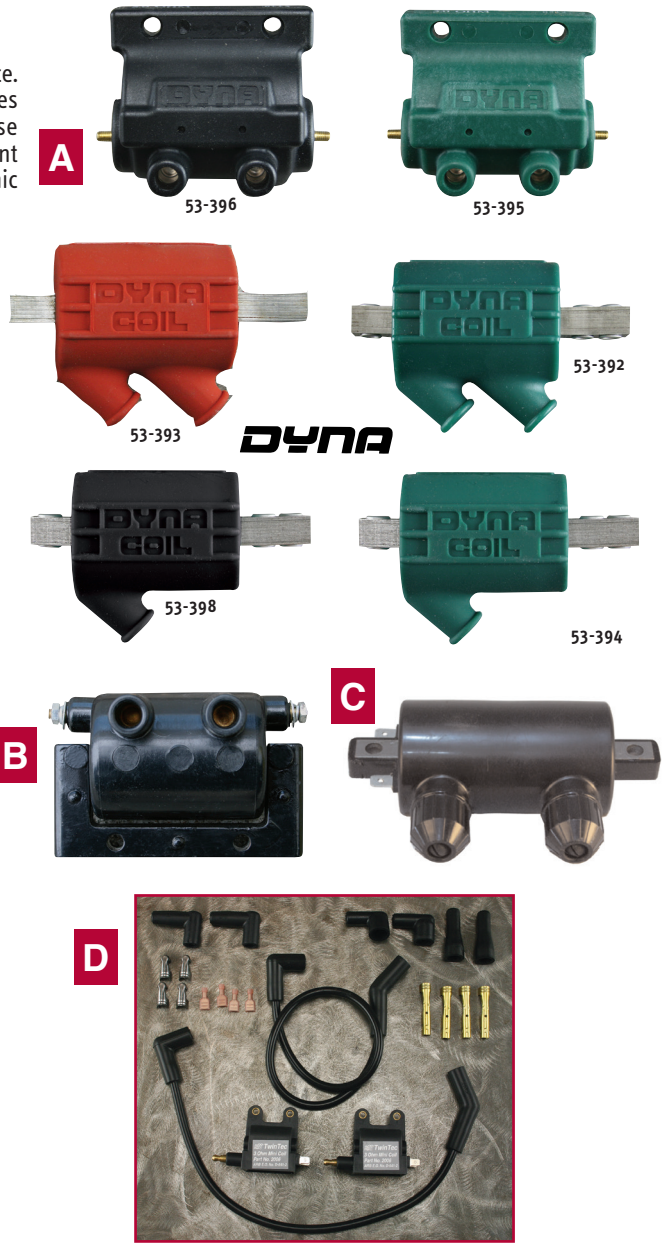

B. *12 VOLT COIL*

53-40 12V Coil for Big Twin 1948 & later and Sportster® 1971 & later. Replaces OEM 31609-65A. Imported. SOLD EACH

C. *UNIVERSAL MOUNT COIL*

Universal mount coil. 12V 2.45OHMS, Dual fire. 1/4" mounting holes, 4" center to center.

53-44 Universal mount, dual fire coil. SOLD EACH

D. *DAYTONA TWIN TEC MINI IGNITION COIL*
FOR EVO SINGLE FIRE APPLICATIONS

Features

- Miniature coil intended for custom motorcycles where space is at a premium and single fire is required for maximum performance
- 3 ohm primary is compatible with Twin Tec Models 1005-1007 and most aftermarket single fire ignitions including Compufire, Crane HI-4, and Dyna® 2000. Not compatible with older Dyna® S series
- Kit includes universal spark plug wireset with choice of 90 and 135 degree spark plug boots and all required electrical terminals
- Overall dimensions: 2.4" x 2.3" x 1.6" (not including terminals and tower).

53-312 Daytona Twin Tec 3 OHM Mini Coil it. Includes two coils, universal wire sets and parts bag with terminals.

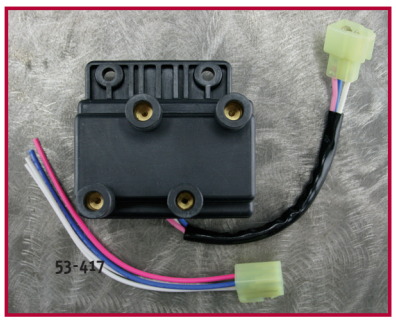

A



53-591



B



C



CHROME PLATED

A. *DYNA® TWIN FIRE COILS*

COIL FOR DUAL PLUG HEADS

This coil will enhance the benefits of, and is the perfect compliment to the Dyna Digital Ignition System (part No. **53-399**) for which it was designed. The Twin Fire coil has all of the features people have come to expect from a Dyna® coil; high voltage (greater than 30,000 volts) with fast rise times, and high energy.

The Dyna Twin Fire coil can be used with any electronic advance ignition system that incorporates dwell control, but can not be used with the DS6-2 Dyna® S or similar ignitions.

53-417 Coil with four output towers. For use on all dual spark plug head applications. SOLD EACH

TWIN FIRE II PERFORMANCE COIL

This coil is designed to give optimum performance when used with the Dyna® 2000 series of ignitions. Over 40,000 volts per/output. Accepts 7 to 8.5mm wires. **CAUTION:** Do not use this coil with the Dyna®-S ignition, breaker points, or similar non dwell-controlled ignitions. The coil may overheat and become damaged. Ignitions designed for the Twin Cam® motor are not compatible with this coil.

53-591 Twin Fire II performance coil. Fits all H-D® equipped with Dyna® 2000 & 2000i series of ignitions. SOLD EACH

B. *DYNA® MINIATURE COILS*

Advanced magnetic core technology delivers high output in one of the smallest packages available. Great for customs where coils need to be hidden. These coils are designed for use with the Dyna® 2000 and 3000 series ignitions, factory installed electronics, or other aftermarket ignitions that employ dwell control. Primary resistance: 3 ohms, secondary resistance: 11.5 ohms. Overall dimensions 4.2" x 2.3" x 1.6", mounting centers 2.9" minimum to 3.5" maximum, approximate weight 9.8 oz. **NOTE:** These coils should NOT be used with the Dyna® "S," Dyna® III or earlier generation ignitions.

53-647 Quantity of two coils with two outputs, 3.0 ohms, 11.5 ohms SOLD AS KIT

53-648 Quantity of one coil with two outputs, 3.0 ohms, 11.5 ohms.

Mini Coils for Metric Cruisers

One of the smallest packages that deliver high output with advanced magnetic core technology. Designed for use with Dyna 2000 & 3000 series ignitions, factory installed electronics or with aftermarket ignitions that employ dwell control. Great for customs where coils need to be hidden

53-710 Quantity of two coils with two outputs, 3.0 ohms, 11.5 ohms. SOLD AS KIT

53-711 Quantity of two coils with one output, 3.0 ohms, 11.5 ohms. SOLD AS KIT

C. *1960'S STYLE COIL COVER*

89-307 Fits all Big Twin 4 speed 1965 thru 1986 and Softail® 1984 thru 1999. SOLD EACH

A. *DIE CAST DOMED IGNITION COVER*

Beautifully chromed die cast aluminum covers give that classic chromed look. Use on 1999 & later Twin Cam 88™. Includes five button head chrome allen screws & wrench. No gasket provided.

89-497 Five hole cover. Replaces OEM 32679-99. SOLD EACH

SEE SEC. 7 FOR MATCHING DERBY COVER

A



B. *POINT COVER*

89-128 Plain chrome cover for Big Twin 1970 thru 1998 and XL 1970 & later. SOLD EACH

B



CHROME PLATED

C. *DOMED POINT COVER*

Die-cast domed chrome plated cover replaces OEM 32584-88T.

89-304 Fits Big Twin 1970 thru 1998 and XL 1970 & later. SOLD EACH

C



CHROME PLATED

D. *ULTIMA® ENGRAVED POINT COVER*

Dress up your engine with an Ultima® etched point cover. This point cover is light weight, laser etched & chrome plated.

89-114 Ultima® point cover. SOLD EACH

D



E. *CHROME COIL COVERS*

Fits Big Twin 1965 thru 1984 and Softail® 1984 thru 1999.

89-70 Plain cover. OEM 31800-78. SOLD EACH
89-71 Louvered cover. OEM 31610-83T.

Fits all Softail® models 2000 & later.

89-528 Plain cover. OEM 31606-00. SOLD EACH

Fits all Dyna Glide® models 1991 thru 1998.

89-399 Plain cover. OEM 31640-91. SOLD EACH

Fits all Dyna Glide® models 1999 & later.

89-492 Plain cover. OEM 31644-99. SOLD EACH

E



ALL PARTS CHROME PLATED

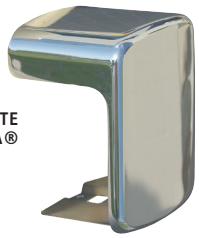

LATE DYNA®

LATE SOFTAIL®



PLAIN



LOUVERED



A. *WING STYLE COIL COVER*

Wing style coil covers reminiscent of the covers of the 1940's with two holes in the front for plug wires.

89-301 For FL & FX 4-speeds, 1965 thru 1986. SOLD EACH
89-302 For all Softail® 1984 & later.

B. *CHROME COIL COVER*

Chrome plated teardrop coil cover.

89-47 Fits Sportster® 1971 & later and Big Twin 1965 & later. SOLD EACH

C. *IGNITION MODULE COVER FOR SPORTSTER®*

Add a little chrome to an otherwise dark area.

89-320 For Sportsters® 1982 & later. Replaces OEM 66328-82T. SOLD EACH

D. *COIL BRACKETS*

5-86 Fits Big Twin 1948 & later. OEM 31728-78. SOLD EACH
5-113 Fits Sportster® 1971 & later except 1982 XLS. OEM 31723-71A & OEM 31727-72. SOLD AS KIT

E. *COIL MOUNTING STUD KITS*

Cad plated studs, nuts, and washers to mount coil and terminal box to the frame. SOLD AS KIT

53-406 Fits Big Twin 1956 thru 1982. Replaces OEM 72341-56A.

COLONY

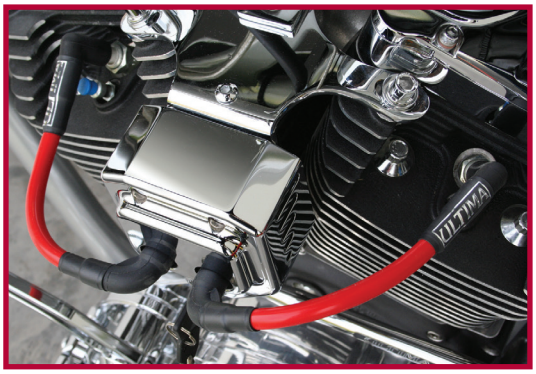

ULTIMA® SPARK PLUG WIRES

Ultima® universal plug wires for use with our Ultima® coil cover & other OEM/custom applications. 300 ohms. SOLD AS SET

18-584 Ultima® plug wires, red.
18-585 Ultima® plug wires, blue.
18-586 Ultima® plug wires, gray.
18-587 Ultima® plug wires, black.
18-589 Ultima® plug wires, yellow.
18-590 Ultima® plug wires, orange.
18-591 Ultima® plug wires, white.

ULTIMA



A. *ULTIMA® HIGH PERFORMANCE SPARK PLUG WIRES*



- High performance 8mm wire-wound supression core producing **300 ohms** of resistance per foot.
- Up to 15 times more efficient than factory OEM wires to promote faster and more complete fuel burn in the cylinder head.
- Resists temperatures up to 600°F.
- Competition Sleeving (used by most WInston Cup teams), covers the entire length of wire, boot to boot, is silicone over fiberglass braid, provides 8000 volts of additional insulation to the wire and eliminates spark plug misfire and spark jump.
- Dyno tested, resulting in 2 - 6 hp increase over factory OEM wires.
- Highest quality silicone spark plug boots and coil boots.
- Posi-snap lock stainless steel spring clip terminals.
- Suppresses radio frequency interference that electronic ignition systems demand.
- Double insulated at spark plug and coil ends.
- Available in 8 custom colors: Red, Blue , Gray, Purple, Orange, Yellow, White and Black.
- Available for H-D® and most aftermarket V-Twin applications (i.e. Fat Bastard®, Big Dog™, Bourget™, etc.)
- Wire sets come complete and ready for installation.

APPLICATION	RED	BLUE	GRAY	BLACK*	PURPLE	YELLOW	ORANGE	WHITE
Twin Cam® Softail®, FXD 99'-up, & FXDWG, side mount coil behind engine.	**18-427**	**18-428**	**18-429**	**18-430**	**18-431**	**18-432**	**18-433**	**18-578**
Twin Cam® FLT 1999-2008.	**18-434**	**18-435**	**18-436**	**18-437**	**18-438**	**18-439**	**18-440**	**18-579**
FLH, FLT 2009-2010.	**18-770**	**18-771**	**18-772**	**18-773**	**18-774**	**18-775**	**18-776**	**18-777**
Softail® Evolution® 1999 & earlier, Big Twin FX & FL 1965 1984, side mount coil behind engine. Also Sportster® 1971 thru 1976 front mount coil.	**18-441**	**18-442**	**18-443**	**18-444**	**18-445**	**18-446**	**18-447**	**18-580**
Sportster® Evolution® 1985 & later (except XLS), and FLT 1985 thru 1998, coil mount up front under gas tank.	**18-448**	**18-449**	**18-450**	**18-451**	**18-452**	**18-453**	**18-454**	**18-581**
FXR models, custom bikes with coil mount between cylinders on motor mount (i.e. Fat Bastard®, Big Dog™, Iron Horse™, Bourget™, etc.).	**18-455**	**18-456**	**18-457**	**18-458**	**18-459**	**18-460**	**18-461**	**18-582**
Sportster® Evolution® 2004 & up	**18-571**	**18-572**	**18-573**	**18-574**	**18-575**	**18-576**	**18-577**	**18-570**

SOLD AS SET

* All sleeved plug wires have chrome embossment of the Ultima® logo.

9

B. *ULTIMA® ATOMIC 40 PLUG WIRES*

These wires provide at least 4-10 added horsepower (conservative estimate) for a boost of firepower. Available in black. 40 ohms.

SOLD AS SET

ATOMIC 40 APPLICATIONS.

18-795	FXD/Softail® 1999-up
18-796	FLT - TC 1999-up
18-797	Early Softail® 1985-1998
18-798	Sportster® EVO 1985-2003
18-799	FXR style/Big Dog/Customs
18-800	Sportster® XL 2004-up
18-801	Rocker 2008-2009
18-802	FLH-FLT 2009-2012, 90 degree
18-803	FLT-TC 1999-2008, 90 degree
18-804	EVO 1985-1998, 90 degree
18-805	For Ultima® coil cover #89-608



A

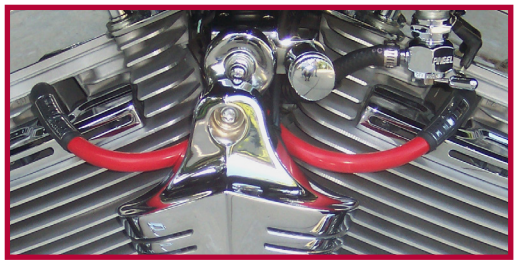

A. *ULTIMA® SPARK PLUG WIRES (NEW LOOK)*

Ultima® plug wires (new look) for Touring models, for all undertank mounted coils. 300 ohms. SOLD AS SET

Twin Cam® - FLH 1999-2008

18-685 Ultima® plug wires, blue.
18-687 Ultima® plug wires, black.
18-688 Ultima® plug wires, purple.

Evolution Touring - EARLY FLH 1985-1998

18-695 Ultima® plug wires, black.
18-699 Ultima® plug wires, white.

Twin Cam® - FLH 2009-2011

18-781 Ultima® plug wires, gray.
18-782 Ultima® plug wires, black.
18-784 Ultima® plug wires, yellow.
18-785 Ultima® plug wires, orange.

B

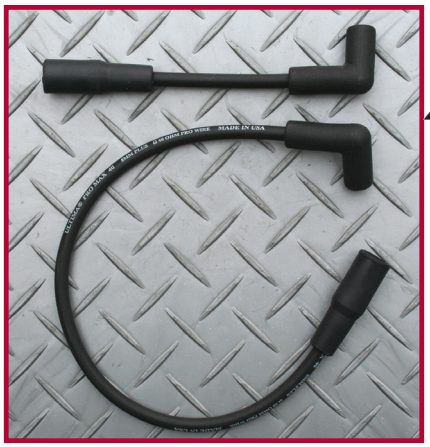



B. *ULTIMA® 40 OHM SPARK PLUG WIRES*

THE ULTIMATE IN SPARK PLUG WIRE TECHNOLOGY, 8MM PLUS

▲ **40 ohms** of resistance per foot, which gives the highest spark energy transfer and the highest EMI/RFI supression. Kevlar® core center with a nickle copper alloy conductor wire, which is wound 124 times per inch. This type of center conductor is a slightly smaller diameter allowing for an increased amount of premium EPDM insulation material. The use of Kevlar® produces a core that has four times the strength of other aramid fiber cores resulting in a very high tensile strength from a small diameter. the insulated core is braided with high strength fiberglass strand for improved resistance to terminal pull off.

▲ The jacket is a high quality silicone product resisting temperatures up to 600°F. Highest quality silicone spark plug boots and coil boots. Posi-snap lock stainless steel spring clip terminals. Dyno-tested, resulting in 2 - 8 hp increase of factor OEM wires. Every wire factory tested for quality and reliability. Wire sets come complete and ready for installation. SOLD AS SET

18-481 For Twin Cam 88® Softail® & Dyna® models.
18-483 For Softail® 1984 thru 1999, FX & FL 1965 thru 1984, and Sportster® 1971 thru 1976.
18-484 For Sportster® 1985 thru 2003 (except XLS) and FLT 1985 thru 1998.
18-485 For FXR models & custom applications with the coil located between the cylinders.
18-769 For HD® Rocker 2008/2009.

C





C. *UNIVERSAL SPARK PLUG WIRE KIT*

Hi-performance grade **U.S.A. MADE** wire set at an economical price. 28" Long wires with 90° heavy duty red oxide boots. FL, FX, & XL 1979 & earlier use solid core wires. All H-D® models 1980 thru 1987 use suppression core wires.

18-103 Yellow solid core wire set. SOLD AS SET
18-110 Black solid core wire set.
18-181 Black suppression core wire set.

ACCEL PLUG WIRES



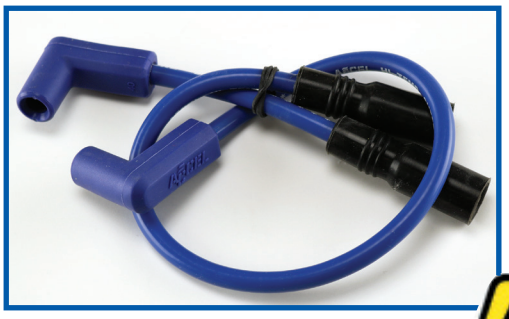



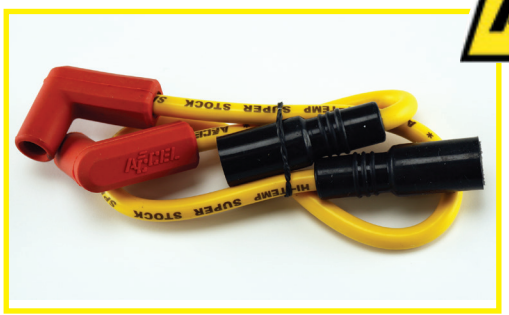

FAMILY	MODEL	YEAR	BLACK	BLUE	RED	YELLOW
Softail	All Models, Exc. Rocker, Blackline, Breakout	2000-2016	18-51	18-50	18-52	18-53
Dyna	FXD Carb or EFI	1999-2016	18-71	18-70	18-72	18-73
Touring	All w/carb or EFI All Models	1999-2008 2009-2016	18-59 18-55	18-58 18-54	18-60 18-56	18-61 18-57
Sportster	XL Models XL Models XR1200	2004-2006 2007-2016 2009-2013	18-59 18-63 18-67	18-58 18-62 18-66	18-60 18-64 18-68	18-61 18-65 18-69
Buell	All except Blast	1999-2009	18-71	18-70	18-72	18-73

FEATURES

- Designed Specifically for Harley Davidson Twin Cam and Late Model Sportsters
- Delivers up to 5 times more peak energy than other “Performance Wires”
- Maximum RFI protection to shield sensitive electronics with 500 Ohms per foot
- Spiral core wire utilizes stainless steel alloy conductor with fiberglass/Kevlar inner core for strength
- Lower resistance delivers more energy to the spark plug
- Custom fit sets are ready to install- no cutting or crimping required
- Fully capable with Delphi fuel injection system

A. *DYNA® PLUG WIRES*

These 8mm grey silicone wires are recommended for late model bikes with electronic advance ignitions or other sensitive electronic equipment. Dyna® suppression core plug wires use the highest grade graphite suppression core for best electrical noise reduction and engine performance. Wires are two foot in length.

18-274 Dyna® plug wires. SOLD AS SET OF FOUR

B. *CUSTOM SPARK PLUG COVERS*

Custom spark plug covers allow you to see the spark through your choice of blue or red tinted lenses.

18-276 Spark plug covers with red lenses. SOLD AS PAIR

C *SPARK PLUG HOLDER*

1" Clamp fits to rear frame tube. Will accept H-D® Long reach plugs. OEM 91775-51.

5-96 For Big Twin 1940 thru 1958. Also any motorcycle accepting 1" clamp. SOLD EACH

D. *CHROME SPARK PLUG COVERS*

They say details make the difference — and these chrome spark plug covers are as easy to install as they are good lookin'. With black silicone seals.

18-234 Spark plug covers for 13/16" plugs (fits Big Twin models). SOLD AS PAIR

E. *HEAD BOLT COVERS FOR EVOLUTION®*

Chrome die cast covers for the head bolt and spark plugs which are held in place by a hi-temp rubber grommet.

89-402 For Evolution® Big Twin 1986 & later. SOLD AS SET



9

ULTIMA® MOTORCYCLE SPARK PLUGS





Ultima® premium spark plugs deliver a quick and clean spark for easy starting, less misfires and a good clean burn. These are the same spark plugs used in our Ultima® Competition Series Engines providing improved fuel efficency for customers world wide.

3-50 For Big Twin EVO Motors. OEM 32311-83. SOLD EACH

3-51 For Twin Cam® Motors 1999-later & XL 1986-later. OEM 32317-86. SOLD EACH

CHAMPION SPARK PLUGS

Champion's motorcycle plug withtwice thecarbon fighting power & about half the plug types; only 6 plug types will cover 90% of the bike market for you. Anti-fouling performance. This spark plug is a real "carbon fighter." Engineering tests show the design offers twice the anti-fouling resistance of Champion's previous design. With improvements like this, no wonder more & more Harley® motorcycle owners are installing Champion Plugs.

CHAMPION POWERSPORT SPARK PLUG: Champion plug number listed numerically first, then alphabetically. To insure accuracy in your order, find the plugs you need & **ORDER BY THE MIDWEST PART NUMBER ONLY**.



MAKE/YEAR & MODEL	NEW POWERSPORT	COPPER PLUS PLUG TYPE	GAP PLUG GAP
1450 1999 & later Twin Cam® 88B All Models	**8812**	RA8HC	.040
1340 (V-2 EVOLUTION)			
1995-99 FL (F.I.) - All Models OHV	**8405**	RN12YC/N12YC	.040
1984-99 FL - All Models OHV	**8405**	RN12YC/N12YC	.040
1985-00 FL - All Models OHV	**8405**	RN12YC/N12YC	.040
1340 (SHOVEL HEAD)			
1982-83 FL - All Models	**8405**	RN13LYC	.040
1980-81 FL - All Models	**8405**	RN12YC/N12YC	.040
1978-79 FL - All Models	**8405**	RN12YC/N12YC	.040
1982-83 FX - All Models	**8405**	RN13LYC	.040
1980-81 FX - All Models	**8405**	RN12YC/N12YC	.040
1978-79 FX - All Models	**8405**	RN12YC/N12YC	.040
1984 FXE	**8405**	RN13LYC	.040
1984 FXSB	**8405**	RN13LYC	.040
1984 FXWG	**8405**	RN13LYC	.040
1200 (V-2 EVOLUTION)			
1988 & later XL- All Models	**8810**	RA8HC	.040
1200 (SHOVEL HEAD)			
1975-80 FL, FX - All Models	**8405**	RN12YC/N12YC	.040
1948-74 FL, FX - All Models	–	RJ12YC/J12YC	.025
1130 2002 & later VRSCA V-ROD (Liquid Cooled)	–	RA4HC	.035
1100 (V-2 EVOLUTION)			
1986-87 - All Models	**8810**	RA8HC	.040
1000 1979-85 XL - All models	**8814**	RL82YC/L82YC	.040
1972-78 XL - All models	–	RH8C/H8C	.030
1983-85 XR - All models	–	RN7YC/N7YC	.040
900 1957-71 XL - All models	–	RH8C/H8C	.030
883 (V-2 EVOLUTION)			
1985 & later XL - All Models	**8812**	RA8HC	.040
350 1973-74 - All Models (3/4" Rch. Hd.)	–	RN3C/N3C	.025

SHOP PACK OF 24 CHAMPION SPARK PLUGS

Contains 24 each of Champion Copper Plus plugs.

3-44 RN11YC4

Perfect Plug for your 113 C.I. Evo Style Engine



COPPER PLUS CHAMPION	MIDWEST PART NO.
N3C	**3-167**
RA4HC	**3-45**
RN7YC	**3-170**

SOLD EACH

Exhaust Drag Pipes Mufflers

10

EXHAUST SYSTEM PARTS FROM THE ENGINE OUT

BIG GROWL® EXHAUSTS FOR SOFTAIL® 1986 THRU 2005

The 2-1/4" Big Growl® pipes feature thick wall tubing, reinforced mounting brackets, one piece step ups, no welds! Available in beautiful show quality chrome. SOLD AS PAIR

60-300 Big Growl® Down 'n Outs, chrome.
60-301 Big Growl® Snub Nose, chrome.
60-302 Big Growl® Down 'n Dirty, chrome.
60-303 Big Growl® Sharp Shooters, chrome.
60-304 Big Growl® Straight Shooters, chrome.
60-305 Big Growl® Long Barrels, chrome.

Heat Shield Sets

60-311 3 Piece heat shield set.
Fits all Big Growl® exhaust.
60-312 2 Piece extended coverage heat shield set.
Fits all Big Growl® exhaust.


60-300


60-301


60-302


60-303


60-311

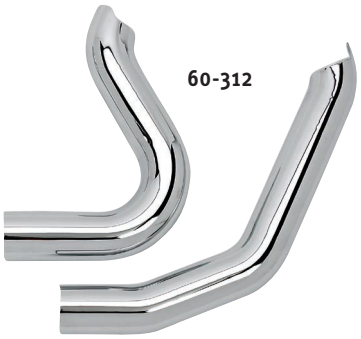
60-312


60-304


60-305

BIG GROWL® EXHAUSTS FOR SOFTAIL® 1986 THRU 2005

The 2-1/4" Big Growl® pipes feature thick wall tubing, reinforced mounting brackets, one piece step ups, no welds! Available in beautiful show quality chrome. SOLD AS PAIR

60-306 Big Growl® Upswept Up 'n Outs, chrome.
60-307 Big Growl® Long Rifles, chrome.
60-308 Big Growl® Short Shooters, chrome.
60-309 Big Growl® Upswept Double Barrels, chrome.
60-310 Big Growl® Long Guns, chrome.

Heat Shield Sets (see previous page for photo)

60-311 3 Piece heat shield set. Fits all Big Growl® exhaust.
60-312 2 Piece extended coverage heat shield set. Fits all Big Growl® exhaust.


60-306


60-307


60-308


60-309


60-310

2" BIG GROWL® SHORT SHOTS

FOR SOFTAIL® 84'-15'
DYNA FXD/FXDWG W/FWD CNTRLS ONLY 91'-15'
ALL TOURING MODELS 86'-15'
FOR SPORTSTER® 86'-15' USING FORWARD CONTROLS

These 2" Big Growl® pipes feature thick wall tubing, O2 sensor bungs with plugs, reinforced mounting brackets available in beautiful show quality chrome or black powder coat.

60-360 Big Growl® Short Shots, chrome.
60-361 Big Growl® Short Shots, black.

WITH BLACK WRAP

60-370 Big Growl® Short Shots, chrome.
60-371 Big Growl® Short Shots, black.



60-360



60-361

NEW!



60-370



60-371

ULTIMA® COMPETITION EXHAUST SYSTEMS FOR SOFTAIL® 86-11 & SPORTSTER® 04 - LATER



NEW!





Complete competition exhaust system includes heat shields, baffles, O2 bung with plug & mounting hardware.

60-362 Chrome exhaust pipes for Softail® 86-11 with heat shield

60-363 Black exhaust pipes for Softail® 86-11 with heat shield

60-364 Chrome exhaust pipes for Sportster® 04-later with full length heat shield

60-365 Black exhaust pipes for Sportster® 04-later with full length heat shield

Replacement O2 Plug & Adaptor

66-291 O2 Plug, 12 mm

66-292 O2 Plug, 18mm

66-293 Adaptor, 18-12mm



ULTIMA® 2 INTO 1 COMPETITION EXHAUST SYSTEMS FOR TOURING & SOFTAIL® MODELS

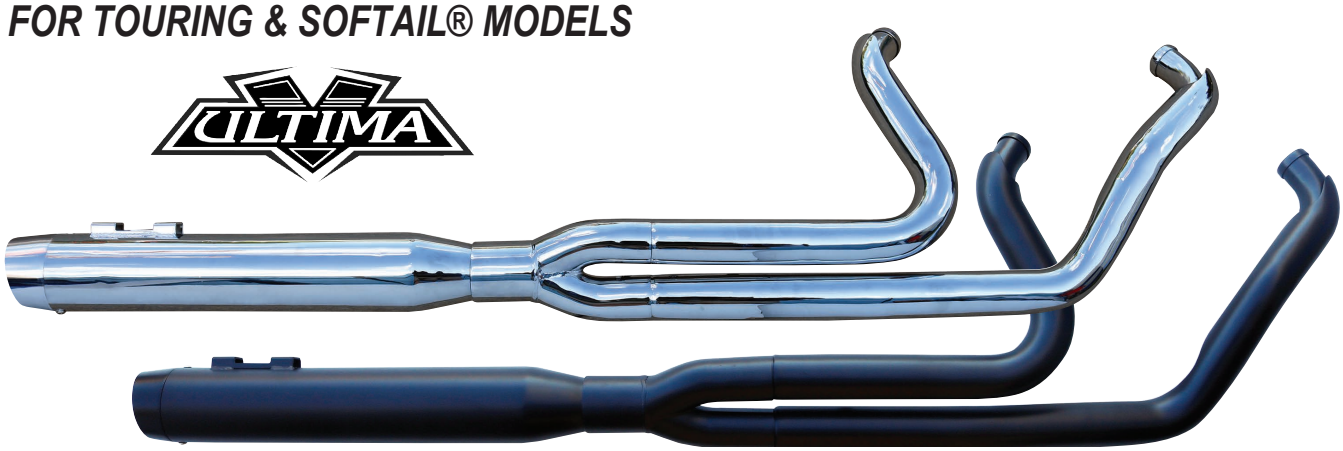

These Ultima® Touring 2 into 1 exhausts have it all, good looks, competition inspired performance, and an excellent exhaust tone. Removeable baffles, O2 Sensor plugs and full length heat shields included and installed.

For'95 to present Touring models. (Shown with optional black tip 60-101)
60-366 2 into 1 exhaust system. Chrome with chrome tip.
60-367 2 into 1 exhaust system. Black with black tip.

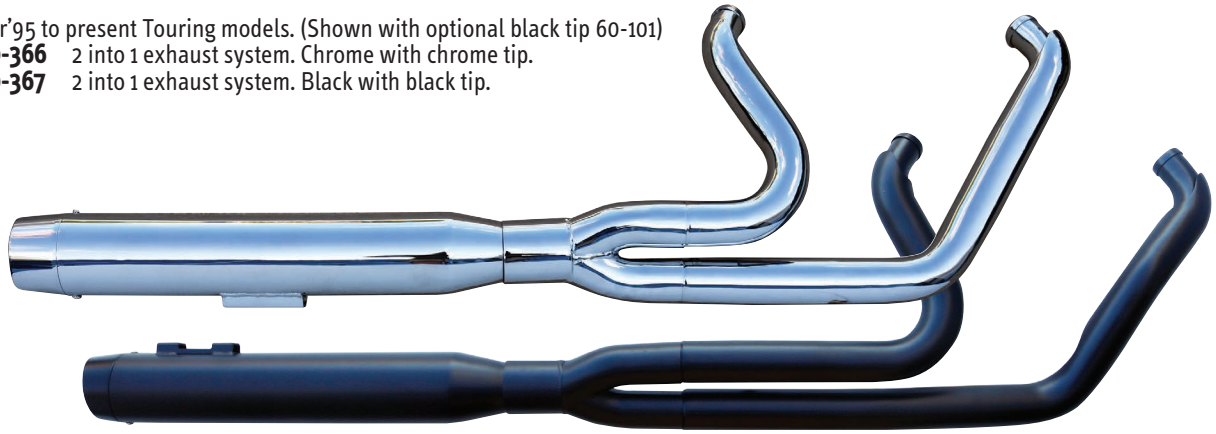

These Ultima® Softail® 2 into 1 exhausts have it all, good looks, competition inspired performance, and an excellent exhaust tone. Removeable baffles, O2 Sensor plugs and full length heat shields included and installed.

For'86 - '14 Softail® models.
60-368 2 into 1 exhaust system. Chrome with chrome tip.
60-369 2 into 1 exhaust system. Black with black tip.

ULTIMA REPLACEMENT EXHAUST TIPS

FOR USE WITH ULTIMA COMPETITION 2 INTO 1 EXHAUST SYSTEMS.

60-100 Exhaust tip, slanted, chrome
60-101 Exhaust tip, slanted black
60-102 Exhaust tip, standard chrome
60-103 Exhaust tip, standard black
60-104 Exhaust tip, slotted chrome
60-105 Exhaust tip, slotted black



60-100



60-101



60-102



60-103



60-104



60-105

ULTIMA® DUAL EXHAUST FOR 1995 - 2008 TOURING MODELS & 2009 - 2016 TOURING & HD® TRI GLIDE® MODELS

- Exclusive design moves the rear cyclinder header under the bike to reduce radiated heat to the passenger
- Full chrome heat shielding with 220˚ coverage



For 1995 - 2008 Touring Models

with non-catalyst mufflers (except Road Glide & Street Glide)

60-372 Chrome dual exhaust

60-373 Black dual exhaust



For 2009 - 2016 Touring & HD® Tri Glide® Models

with non-catalyst mufflers

60-374 Chrome dual exhaust

60-375 Black dual exhaust

ULTIMA® 3.5" & 4" SLIP-ON MUFFLERS

FITS: 1995-2016 Harley Davidson Touring Models (Bagger, Dresser)Electra Glide / Road Glide / Street Glide / Ultra Classic / Road King FLHT / FLHTR / FLHX / FLHTCU / FLHR

(Will not work with the 2010 FLHX & FLHTRX with the factory 2 to 1 system)

Features:

- Removable High-Flow Performance Steel Baffles
- Slotted channel mounting system allows for easier installation & guaranteed fitment/alignment
- Tips can be removed and replaced as desired
- Set does NOT include clamps
- Sold as a set/pair

64-390 Muffler, Megaphone, chrome with chrome tip

64-391 Muffler, Megaphone, black with black tip

64-392 Muffler, 3.5" Slip On, chrome with straight cut black tip

64-393 Muffler, 3.5" Slip On, black with straight cut black tip

64-394 Muffler, 4" Slip On, chrome with slanted cut chrome tip

64-395 Muffler, 4" Slip On, black with slanted cut black tip

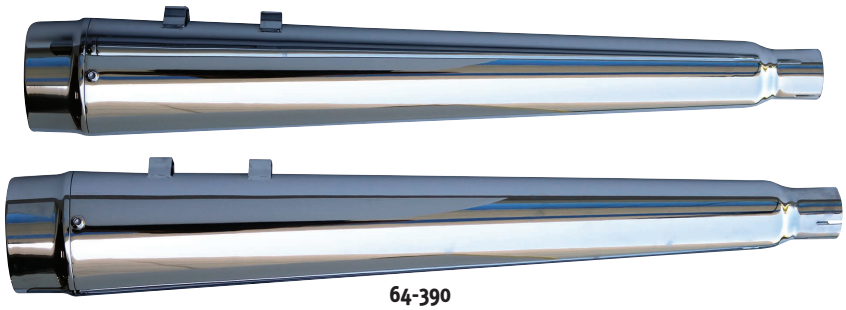

64-390

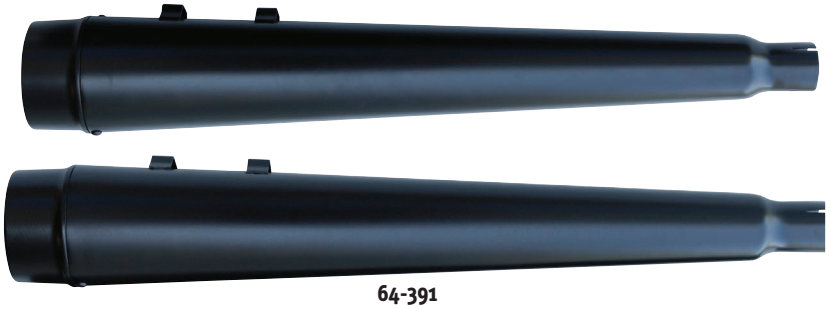

64-391

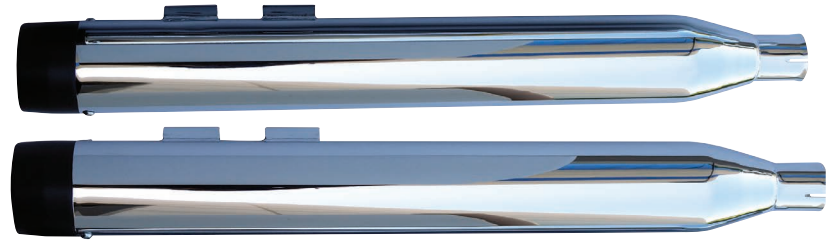

64-392



64-393

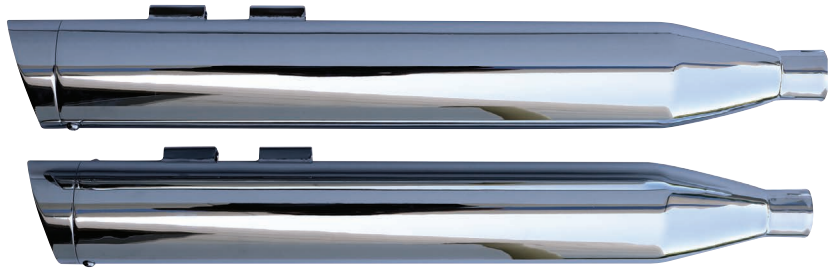

64-394



64-395

ULTIMA® 2-1/4" RADIUM MUFFLERS FOR 2014 -UP XL MODELS W/ BILLET END CAPS

NEW

Features:

- Removable High-Flow Performance Steel Baffles
- Slotted channel mounting system allows for easier installation & guaranteed fitment/alignment
- Ends are straight cut to accept billet end cap
- Set does NOT include clamps
- Sold as a set/pair

64-310 Chrome Radium XL muffler w/ black end caps
64-311 Black Radium XL muffler w/ chrome end caps
64-312 Chrome Radium XL muffler w/ chrome end caps
64-313 Black Radium XL muffler w/ black end caps

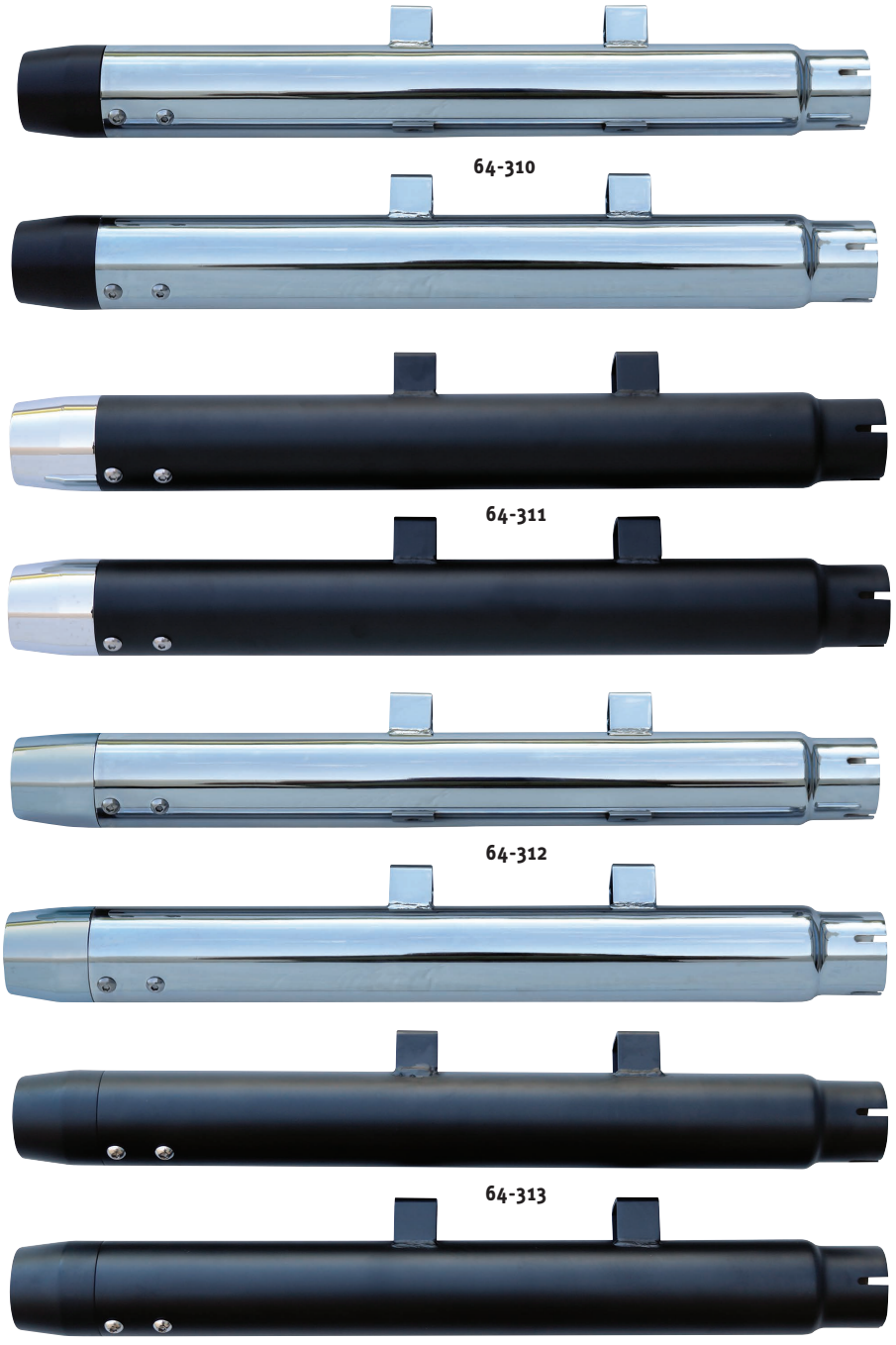

64-310

64-311

64-312

64-313

ULTIMA® 2-1/4" RADIUM MUFFLERS FOR 2017 -UP

NEW

Features:

- Removable High-Flow Performance Steel Baffles
- Slotted channel mounting system allows for easier installation & guaranteed fitment/alignment
- Ends are straight cut to accept billet end cap
- Set does NOT include clamps
- Sold as a set/pair

64-396 Megaphone, Touring, 17-20 Chrome
64-397 Megaphone, Touring, 17-20 Black

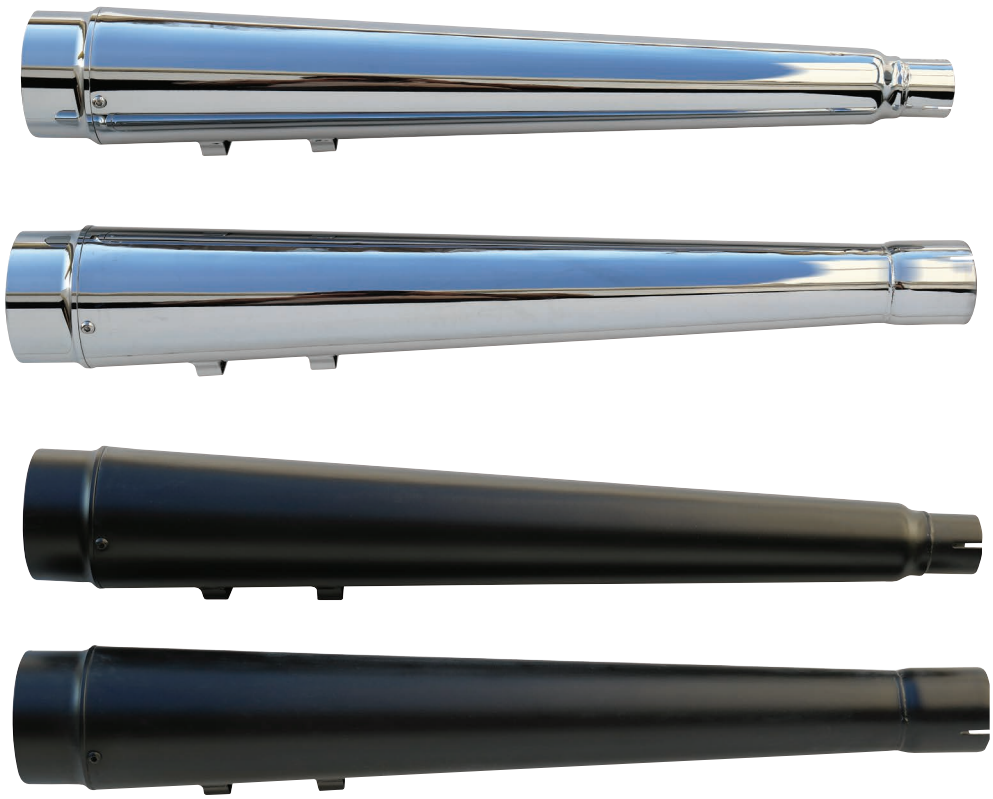

ULTIMA® 1-7/8” FISHTAIL EXHAUST SLIP ON MUFFLERS FOR TOURING MODELS IN CHROME OR BLACK

NEW

33 INCH FISHTAIL

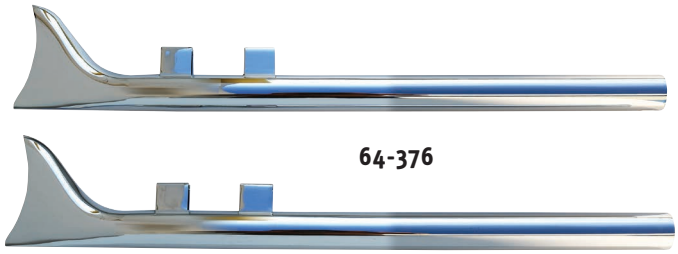

64-376



64-377

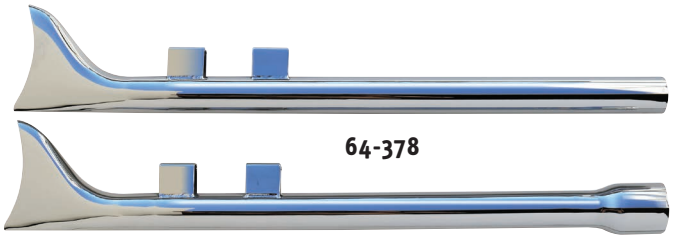

64-378



64-379

36 INCH FISHTAIL

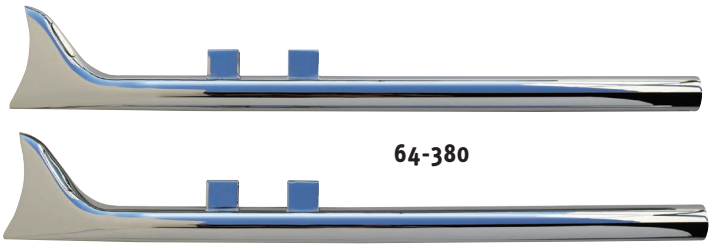

64-380



64-381

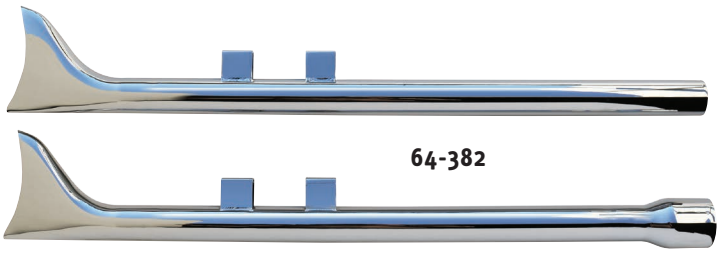

64-382

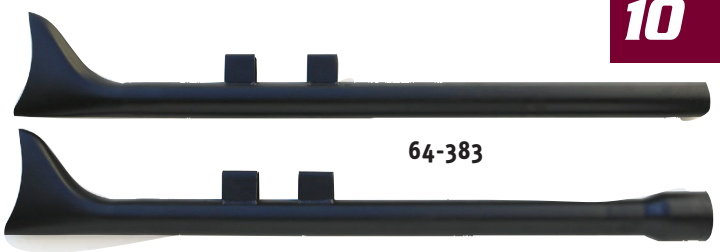

64-383

10

Features
- 1-3/4" I.D.
- 1-7/8” O.D.
- Hardware included
- Sold as a set/pair
- No baffles

64-376 Fishtail, 33 Inch 95-16 Touring Chrome
64-377 Fishtail, 33 Inch 95-16 Touring Black
64-378 Fishtail, 33 Inch 17-20 Touring Chrome
64-379 Fishtail, 33 Inch 17-20 Touring Black

64-380 Fishtail, 36 Inch 95-16 Touring Chrome
64-381 Fishtail, 36 Inch 95-16 Touring Black
64-382 Fishtail, 36 Inch 17-20 Touring Chrome
64-383 Fishtail, 36 Inch 17-20 Touring Black

A



A. *ULTIMA® 1-3/4" UPSWEPT HEADER EXHAUST*

For Softail® Evolution® 1986-1999. 1-3/4" upswept header exhaust with mounting bracket.

62-626 1-3/4" Upswept header exhaust. SOLD AS SET

B



B. *ULTIMA® 1-3/4" DUAL CROSSOVER HEADERS FOR FLH SHOVEL 1970 THRU 1984*

1-3/4" Dia. independent dual crossover header exhaust will fit FLH Shovel 1970 thru 1984, kick or electric start. Includes mounting bracket.

62-632 Crossover header exhaust. SOLD AS SET

C



C. *ULTIMA® 1-3/4" DRAG PIPES FOR FLH SHOVEL 1970 THRU 1984*

34" Long, 1-3/4" dia. drag pipes will fit FLH Shovel swingarm 1970 thru 1984, kick or electric start. Floorboard must be moved for pipe clearance.

62-616 Goose style drag pipes. SOLD AS SET

D. *ULTIMA® 1-3/4" UPSWEEP HEADERS FOR SHOVEL 1970 THRU 1984*

1-3/4" Dia. upsweep header exhaust set will fit Shovel swingarm 1970 thru 1984. Will fit FXE type battery boxes. Includes mounting bracket.

62-623 Upsweep header exhaust. SOLD AS SET

D

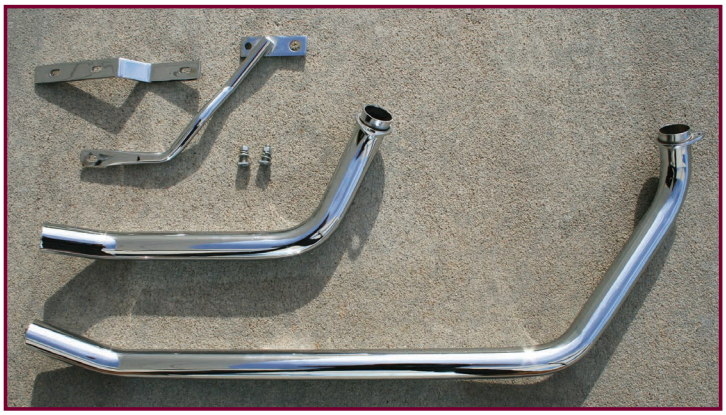

E. *29" FISHTAIL EXTENSION FOR UNIVERSAL USE ON 1-3/4" HEADERS*

This fishtail extension fits right or left side and can easily be added to exisitng head pipes. Use part No. 66-48 clamps.

64-369 Fishtail extension. 29" Long, no baffle. SOLD EACH

E



ULTIMA® DRAG PIPES

PANHEAD

60-200 1-3/4" O.D., 34" long.

SHOVELHEAD 1970 & LATER

Will clear FL big battery with relay cover off. Rear pipe routes over the transmission

60-203 1-3/4" O.D. 40" long.
60-204 2" O.D., 40" long.

FXST 1984 THRU 1999 AND FX 1984 & 1985

Mounts to OEM mounting bar.

60-205 1-3/4" O.D., 40" long.
60-206 2" O.D., 40" long.

DYNA® 1991 & LATER

Mounts to OEM mounting bar.

60-207 1-3/4" O.D., 40" long.
60-208 2" O.D., 40" long.

FXR 1984 THRU 1999

Mounts to OEM mounting bar.

60-209 1-3/4" O.D., 40" long.
60-210 2" O.D., 40" long.



NOTE: Drag pipes are not legal for street use anywhere. Intended for competition use only.

ULTIMA® DRAG PIPES

IRONHEAD XL 1957 THRU 1985 (EXCEPT 1979)

Requires brake pedal stop part No. **66-73** on 1980 thru 1985.
Also uses channel mount bracket.

60-211 1-3/4" O.D., 40" long.
60-212 2" O.D., 40" long.

V2 XL 1986 THRU 2003

Mounts to OEM mounting bracket.

60-213 1-3/4" O.D., 40" long.
60-214 2" O.D., 40" long.

V2 XL 2004 THRU 2006

Mounts to OEM mounting bracket.

60-217 1-3/4" O.D., 40" long.
60-218 2" O.D., 40" long. SOLD AS SET

SPORTSTER® 2007 & LATER

Features exhaust crossover bung, O2 sensor bungs, reinforced mounting brackets & includes mounting hardware.

60-219 1-3/4" O.D., 40" long.
SOLD AS SET

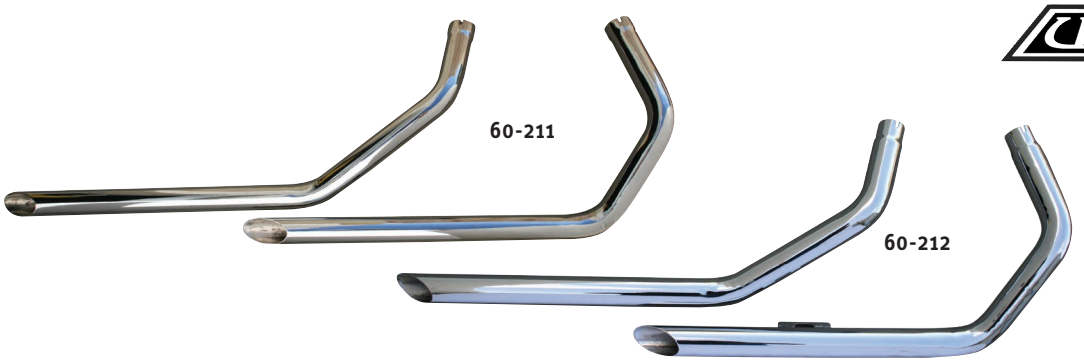

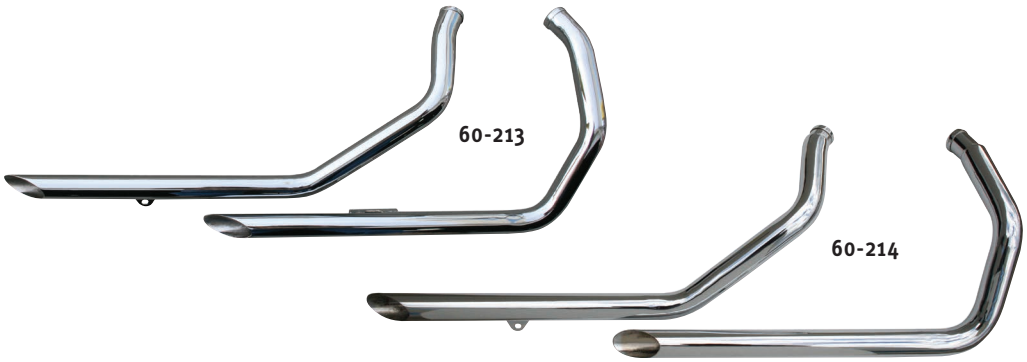

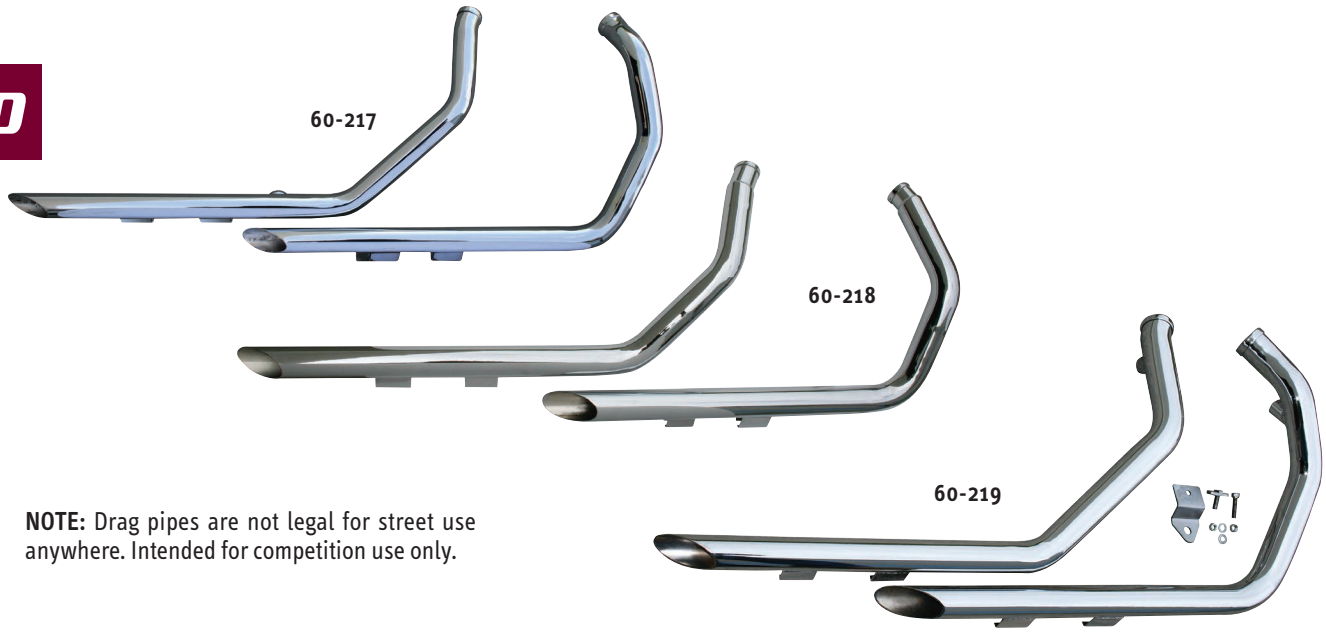

NOTE: Drag pipes are not legal for street use anywhere. Intended for competition use only.

O2 SENSORS DIRECT FIT



These U.S.A. Made O2 sensors are all direct fit, no modifications needed.
Features:

- Extra high temperature dual shield end.
- Improved engine performance.
- Best consolidation - fewer SKU's for more coverage
- ISO 9001 and TS16949 certified manufacturing plant.
- Meets OEM specifications.

64-150 Replaces OEM 27719-07
64-151 Replaces OEM 27683-07
64-152 Replaces OEM 27703-08
64-153 Replaces OEM 27729-10
64-154 Replaces OEM 27809-10
64-155 Replaces OEM 32700005
64-156 Replaces OEM 32700006
64-157 Replaces OEM 32700026
64-158 Replaces OEM 27690-08



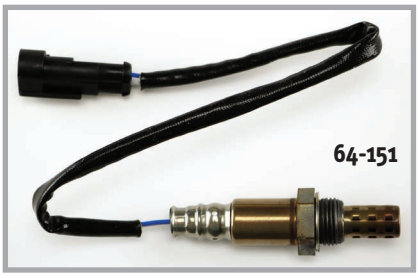















O2 SENSOR PLUGS

Replacement O2 Plug & Adaptor
66-291 O2 Plug, 12 mm
66-292 O2 Plug, 18mm
66-293 Adaptor, 18-12mm



NEW

A. *REPLACEMENT MUFFLER FOR H-D®*

These replacement mufflers fit 1-3/4" pipes. SOLD EACH

64-368 Standard muffler, 25" long.



CHROME PLATED

B. *FISHTAIL MUFFLERS*

64-339 2-7/8" Dia. with 1-3/4" I.D. inlet. 30" Long. SOLD EACH
Includes inner steel-cut baffle & clamp.

64-373 Same as above part No. **64-339** except 36" long.



64-339



64-373

C. *CUSTOM MUFFLERS FOR UNIVERSAL USE*

FIts 1-3/4" and 1-1/2" head pipes with use of sizing sleeve included. These custom slip-on mufflers, available in 3 styles, feature heavy gauge outer shell, glass-pak baffle, hidden mounting studs and show chrome finish.

64-300 Slash-cut muffler; 15" long. SOLD EACH

64-319 Tapered muffler; 15" long.

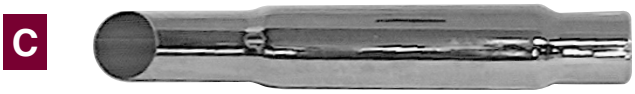

CHROME PLATED

64-300



64-319

D. *SHORTY MUFFLER FOR UNIVERSAL USE*

12" Long. 1-1/2" x 1-3/4" Inlet, fits either size. Comes with replaceable fiberglass packed diffuser.

64-3 SOLD EACH

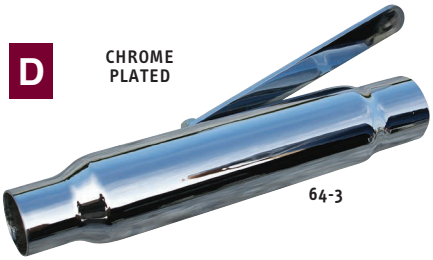

CHROME PLATED

64-3

E. *RUBBER MOUNT ISOLATORS*

Are your pipes squeaking? You should replace your isolators!
Muffler rubber mount isolators fit under saddle bags.
Should be replaced every 2 years. OEM 65724-85

65-108 Rubber mount isolators. SOLD AS PAIR



A



64-45



64-48

B



C

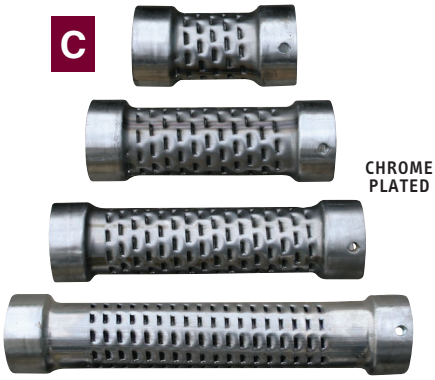

CHROME PLATED

D



66-14

E

CHROME PLATED

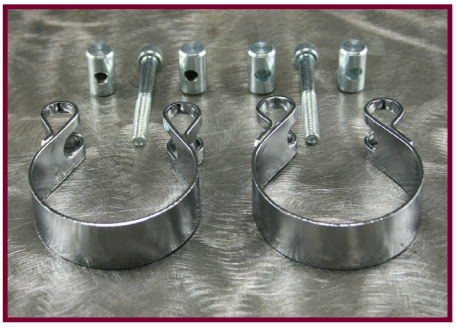

F



CLAMP & ALLEN HEAD BOLT CHROME PLATED

G



A. *4" LONG BAFFLES FOR UNIVERSAL USE*

These 4" long baffles fit in the end of exhaust pipes and some mufflers to reduce noise level and offer a minimum performance restriction.

64-45 For 1-1/2" pipes. SOLD EACH
64-47 For 1-3/4" pipes.
64-48 For 2" pipes.

B. *8" LONG BAFFLES FOR DRAG PIPES*

These 8" long inserts slide straight through drag, TT, and side pipes and fasten in place with a single nut & bolt (included).

64-100 For 1-1/2" pipes. SOLD EACH
64-105 For 1-3/4" pipes.
64-190 For 2" pipes.

C. *ULTIMA® BAFFLES*

Made to fit 2-1/4" exhaust to help reduce noise and provide better low end torque. Offered in 4", 6", 8" & 10" lengths. Installs in minutes.

64-103 Baffle, 2-1/4", 4" long.
64-101 Baffle, 2-1/4", 6" long. SOLD EACH
64-104 Baffle, 2-1/4", 8" long.
64-102 Baffle, 2-1/4", 10" long.

D. *END CLAMPS FOR UNIVERSAL USE*

For use on muffler ends or pipes.

66-14 1-1/2" Inside diameter. SOLD EACH
66-15 1-5/8" Inside diameter.
66-16 1-3/4" Inside diameter.
66-17 1-7/8" Inside diameter.
66-18 2" Inside diameter.

E. *EXHAUST HEAD CLAMPS FOR SPORTSTER®*

Designed to tighten pipes securely to head. These are barrel type exhaust port clamps made of quality steel.

66-42 For Sportster® SOLD AS SET

F. *EXHAUST CLAMPS FOR PAN AND SPORTSTER®*

Exhaust clamps add the finishing custom touch while insuring unmatched, super-sealing exhaust port connections. Made from heavy-wall cold-rolled steel (1/8" wall). Allen head bolts feed into barrel-type pre-threaded nuts which are heli-arc welded to clamps. A must for those extra show points.

66-49 For H-D® Pan 1948 thru 1965. Set of two for 1-3/4" & 2" pipes. OEM#65274-88T SOLD AS SET
66-48 For Sportster® 1957-1985. Set of two for 1-3/4" pipes. OEM#65273-88T

G. *PIPE CLAMPS FOR UNIVERSAL USE*

A long exhaust pipe clamp.

66-10 1-3/4" Inside diameter. SOLD EACH
66-61 2" Inside diameter.

A. *STAINLESS STEEL SAFETY WIRE*

Wire comes in a handy 1 pound dispensing canister. Meets ASTM A580 chemistry. SOLD AS ROLL

18-790 22 gage safety wire, .025" dia.; aprox 595 ft. per roll.
18-791 20 gage safety wire, .032" dia.; aprox 362 ft. per roll.
18-792 18 gage safety wire, .041" dia.; aprox 221 ft per roll.

A



B. *ACORN NUT & GASKET KIT FOR SHOVELHEAD*

Our kit includes 2 studs, 2 exhaust gaskets, chrome plated acorn nuts and lockwashers.

66-100 For Shovel 1966 thru 1984. SOLD AS KIT
78-143 Gasket only.

B



ACORN NUTS
CHROME PLATED

C. *ULTIMA® EXHAUST FLANGES, FOR SHOVELHEAD / PANHEAD*

These Ultima® 3-bolt exhaust flanges are ideal when building your own custom exhaust for Ultima® Shovelheads, or S.T.D.® & other custom Shovelhead & Panhead motors. Will work with single bolt style exhaust gaskets. MADE IN USA.

66-102 Ultima® 3-bolt exhaust flanges. SOLD AS PAIR

C



D. *FIRE RING FOR SHOVEL*

This fire ring is a one piece copper & fiber exhaust port gasket shaped like the exhaust port flange. Copper fire ring helps prevent burn out.

78-143 SOLD EACH

D



E. *EXHAUST PORT ITEMS FOR 84'-LATER BIG TWIN*

Exhaust port related items for Evolution® Big Twin 1984 & later, and Evolution® Sportster® 1986 & later. Twin Cam® models '99 - present.

66-96 Retaining ring. OEM 65325-83. **U.S.A. MADE.** SOLD EACH
66-203 Exhaust flange. Chrome. OEM 65328-83. SOLD AS PAIR
78-445 Exhaust gasket; Cometic. Woven wire with graphite, tapered. Replaces OEM 65324-83A. SOLD AS PKG. of 10
78-538 Exhaust gasket; Cometic. EVO race style. SOLD AS PKG. of 10
78-206 Exhaust Gasket, Stainless Spiral, 99'-later. SOLD AS PKG. of 10
66-242 Exhaust stud. SOLD EACH

E



78-445



66-96

ULTIMA® EXHAUST GASKETS SOLD EACH

77-751 Exhaust Gasket, Tapered. OEM 65324-83 .
77-752 Exhaust Gasket, Flat race style, Carbon & Steel OEM 65324-83
77-753 Exhaust Gasket, Flat race style, Mashed Steel, OEM 65324-83
77-754 Exhaust Gasket, Shovelhead 66-84, Copper



66-203

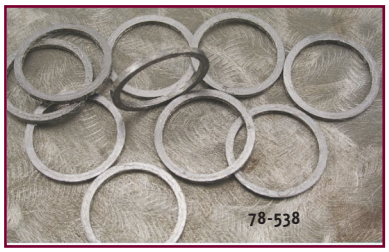

78-538

F. *ULTIMA® EXHAUST FLANGE KIT*

Exhaust port related items for Evolution® Big Twin 1984 & later, and Evolution® Sportster® 1986 & later. Twin Cam® models '99 - present.

66-290 Exhaust flange kit with retaining rings.
2 Retaining ring. OEM 65325-83.
2 Exhaust flange. OEM 65328-83.

F



NEW

A



B

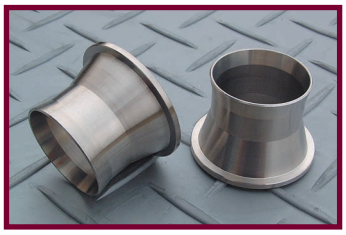

C



NEW

D



E



F



A. *EXHAUST PORT FOR PAN*

This individual casting with the correct fO.D. and tapered I.D. in extra length for the replacement of worn, cracked, or missing exhaust ports. It is cast from the same high temperature alloy as used in the head. This alloy is not available in standard stube form nor is there a standard tube, which has the correct O.D. or I.D.

66-101 Pan exhaust ports. **SOLD AS PAIR**

B. *EXHAUST POWER CONES*

Steel cones are CNC machined and require no special tool or alteration to install between the head and head pipe. Can be welded in place to help stop any rattles or leaks. Should be used on straight pipes to increase low end torque. Helps eliminate flat spots and increase back pressure.

64-477 Fits Evolution® and Twin Cam®. **SOLD AS PAIR**

EXHAUST TORQUE CONES

64-478 Stainless steel torque cones. **SOLD AS PAIR**
64-479 Chrome plated torque cones.

C. *O2 SENSOR PLUGS*

Replacement O2 Plug & Adaptor

66-291 O2 Plug, 12 mm
66-292 O2 Plug, 18mm
66-293 Adaptor, 18-12mm

D. *EXHAUST INSULATING WRAP*

Increases horsepower and fuel efficiency by maintaining hotter exhaust gases that exit faster through decreased density. Wraps withstand continuous heat up to 2000˚ F.

64-110 Brown, 2" x 50' Exhaust Wrap **SOLD EACH**
64-111 Black, 2" x 50' Exhaust Wrap
64-112 Copper, 2" x 50' Exhaust Wrap

E. *EXHAUST WRAP KITS*

Everything you need for a professional installation in one kit. Includes 2 rolls of 2" x 15' exhaust wrap, 1 can of HT silicone coating and locking ties (eight 8" & four 14").

64-113 Black wrap & black HT silicone coating. **SOLD AS KIT**
64-114 Tan wrap & aluminum HT silicone coating.
64-115 Tan wrap & white HT silicone coating.

F. *SNAP STRAP KIT*

Stainless steel straps offer quick and clean looking installation. Just insert end and pull to tighten.

66-110 Snap strap kit, 12 pack of 9" straps. **SOLD EACH**

ULTIMA® GASKETS

MW#	OEM#	DESCRIPTION	QTY.
EXHAUST GASKETS			
77-751	65324-83	EXHAUST GASKET, TAPERED STYLE	EA
77-752	65324-83	EXHAUST GASKET, FLAT RACE STYLE, CARBON & STEEL	EA
77-753	65324-83	EXHAUST GASKET, FLAT RACE STYLE, MASHED STEEL	EA
77-754	65834-68	EXHAUST GASKET, SHOVELHEAD 66-84, COPPER	EA

TWIN CAM® INDIVIDUAL REPLACEMENT GASKETS, SEALS, O-RINGS 1999-UP

IMPORT MW#	COMETIC MW#	COMETIC REF#	OEM REF#	APPLICATION	QTY
• **Exhaust Gaskets**					
78-538	C9719			Exhaust Gasket All Models 1999 -UP "RACE STYLE"	10
78-445	C9288		65324-83A	Exhaust Gasket All Models 1999 -UP "TAPERED"	10
78-206	C9540			Exhaust Gasket, Stainless Spiral	10

1984-99 BIG TWIN EVO INDIVIDUAL REPLACEMENT GASKETS, SEALS, O-RINGS

IMPORT MW#	COMETIC MW#	COMETIC REF#	OEM REF#	APPLICATION	QTY
• **Intake and Exhaust**					
95-759	C9088		27002-89	89' to Present Carb to Manifold Sealing Ring	1
78-411	C9299		29242-83	84'-89 Intake to Head Compliance Fitting Gasket	10
95-758	C9290		26995-86A	90'-99 Intake to Head Compliance Fitting Gasket	10
78-538	C9719		65324-83	84'-91 Exhaust Port Gasket "RACE STYLE"	10
78-445	C9288		65324-83A	92'-99 Exhaust Port Gasket "Taper Style"	10

MOTOR KITS FOR SHOVELHEAD & PANHEAD MOTORS

IMPORT MW#	COMETIC MW#	COMETIC REF#	OEM REF#	APPLICATION	QTY
• **Intake and Exhaust Gaskets**					
78-446	C9587		65834-68X	66'-84 Exhaust Gasket with Fire Ring	10

BUELL® & EVO SPORTSTER®

IMPORT MW#	COMETIC MW#	COMTEIC REF#	OEM REF#	APPLICATION	QTY
• **Exhaust Gaskets**					
78-538	C9719		65324-83	86'-04 Exhuast Port Gasket "RACE STYLE"	10
78-445	C9288		65324-83A	93'-04 Exhaust Port Gasket "TAPERED STYLE"	10

NOTE: COMETIC REF# AND OEM REF# FOR REFERENCE PURPOSES ONLY

Seats Luggage Racks Touring Saddlebags

-11-

SEAT SPRINGS, BRACKETS
HEADLIGHT FAIRING,
CARGO STRAPS,
GOGGLES

ULTIMA® SADDLES

"HIGH NOON"

SPRING MOUNTED SOLO SEATS

METAL SEAT PAN

76-928 9" Solo, black
76-929 13" Solo, black

SMOOTH DESIGN

76-740 Brown Leather 13" wide
76-741 Black Leather 13" wide
76-742 Black Vinyl 13" wide
76-743 Black Vinyl 9" wide
76-745 Black Leather 9" wide
76-746 Brown Leather 9" wide


76-740


76-741


76-746


76-743


76-742


76-932

CROSS WEAVE DESIGN

76-932 9" Solo, beige
76-933 13" Solo, brown


76-933

METAL SEAT PAN

76-929 13" Solo, black


76-929

ULTIMA® "CROSS STITCHED" SPRING MOUNTED SOLO SEATS

SPRING MOUNTED, LEATHER

These solo seats are stitched all around underneath the leather cross-lacing.

76-891 Rust Colored Leather, 13" wide
76-892 Black Leather, 9" wide
76-893 Rust Colored Leather, 9" wide


76-891


76-892


76-893

SOLO SEAT MOUNT KITS
WITH DUAL SHOCKS, 4",5" & 6.5"

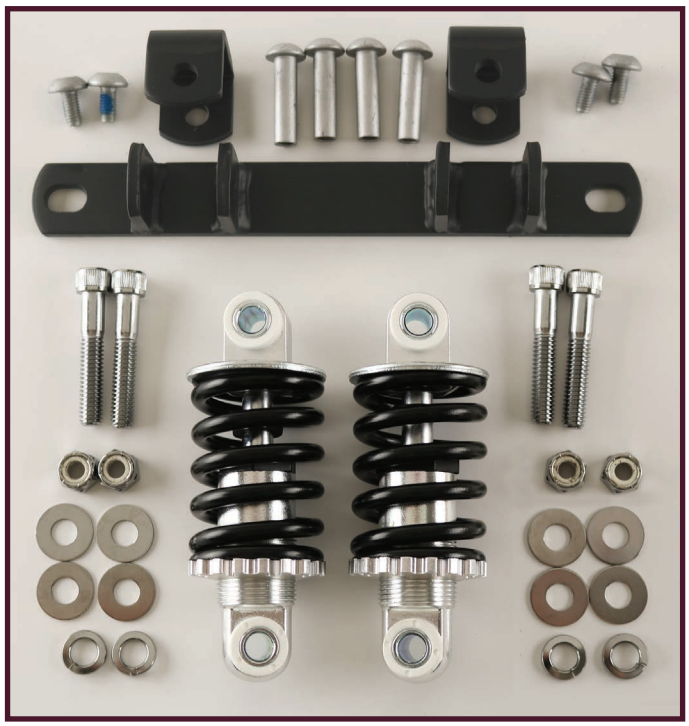

82-53



82-54

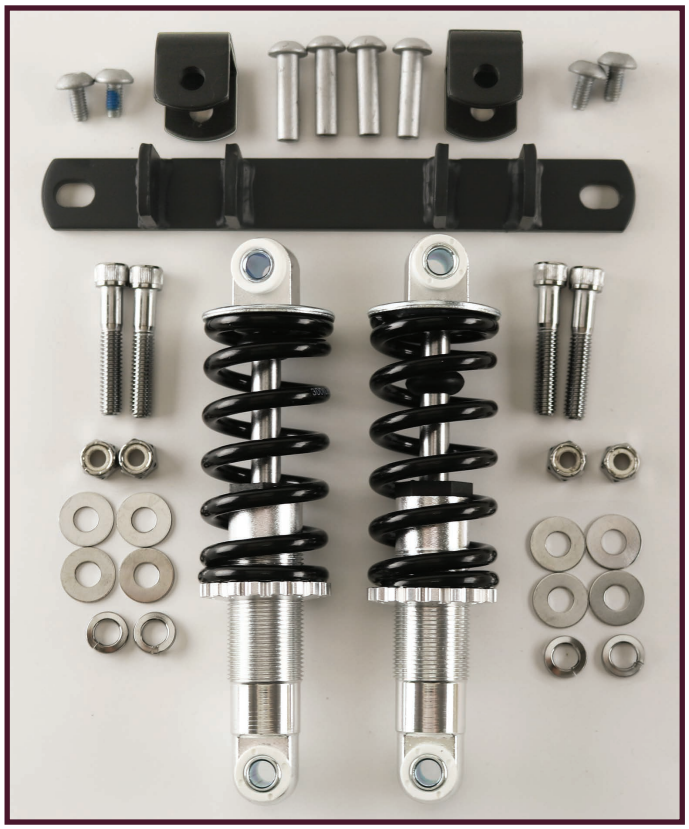

82-55

NEW!

82-53 Solo seat mount kit with dual 4" shocks
82-54 Solo seat mount kit with dual 5" shocks
82-55 Solo seat mount kit with dual 6.5" shocks

11



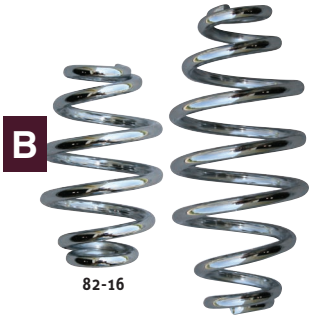



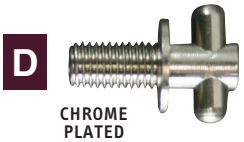









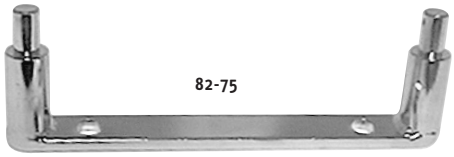





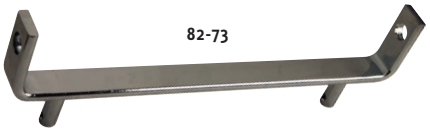

A. *SEAT BRACKET MOUNTING BRACKET*

This bracket allows you to mount your seat to most frames — no more welding.

82-74 For use with part No. **82-12** seat bracket. SOLD EACH

B. *SOLO SEAT SPRINGS*

Chrome plated solo seat springs. Available in two heights.

82-16 3" Seat spring. SOLD EACH
82-76 5" Seat spring. Works well with later seats for FXST.

C. *NYLON SEAT BRACKET WASHER*

This **U.S.A. MADE** 1/4" nylon washer keeps the seat bracket from scratching the paint on the rear fender.

24-1 Fits 1982 & later FXE, FXSB, FXWG, FXST, XLH, XLS, XLX & XR-1000. OEM 6410. SOLD EACH

D. *QUICK RELEASE SEAT PINS*

Threads into existing seat mounting hole in rear fender. Spring loaded pin can be quickly removed for an easy on/off seat.

82-1 Quick release seat pin, 1/4 - 28. SOLD AS SET
82-7 Quick release seat pin, 1/4 - 20. Used on 1996 & later models. SOLD AS SET
82-2 Replacement pin only. SOLD EACH

E. *SEAT CLEVIS PIN & SPRING*

Nice reproduction of seat pin and spring retainer used on all H-D® models with seat post, 1929 & later.

82-78 Seat clevis pin & spring. SOLD AS KIT

F. *UNIVERSAL SEAT BRACKETS*

Designed to fit most custom made seats. Made of heavy gauge steel.

82-12 A 1" x B 4-3/4" x C 1-3/4" x D 1-1/2". SOLD EACH
82-67 A 1-1/2" x B 4-1/4" x C 2" x D 1-1/2".

G. *SEAT POST ROD LOCK NUT & LOCKWASHER*

Cad plated nut and lockwasher fits all H-D® models, 1925 thru 1981, except FX & FL.

82-80 Kit. Replaces OEM 51674-25 nut. SOLD AS KIT

H. *SOLO SEAT MOUNTING BRACKETS*

These solo seat mounting brackets eliminate having to weld your own mounts.

82-71 For 74" H-D® swingarm. SOLD AS KIT
82-75 For all custom FXST & FLST models. SOLD AS SET
82-72 For 74" H-D® rigid. SOLD EACH
82-73 For Sportster® H-D® swingarm. SOLD EACH

A. *SEAT BOLTS*

Trash that ugly phillips screw on the back seat bracket and check out these **U.S.A. MADE** hold-down kits. A trick little add-on that looks sharp. Fits Big Twin & Sportsters®, all models thru 1995. Kits includes flat nylon washer & chrome washer.

41-22 1/4 - 28 Acorn seat bolt kit. SOLD AS KIT
41-23 1/4 - 28 Allen seat bolt kit.

U.S.A. MADE

A

CHROME PLATED

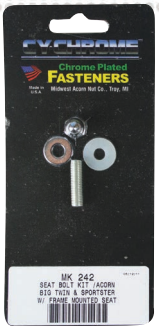

41-22



41-23

B. *BOLT-ON SISSY BARS FOR H-D®*

These bolt-on sissy bars are available in 20" Lowboy style, come **complete with chrome side mount brackets** and all mounting hardware.

68-100 20" Lowboy for Sportster® 1957-1978 with or without turn signals.

B

CHROME PLATED

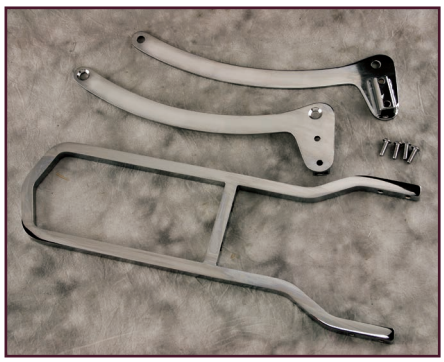

C. *CHROME SISSY BAR KIT 6-1/4" TALL*

Measures 6-1/4" high x 7-1/2" wide for rigid side plate. OEM 51512-02

68-150 Fits FXD '02-'05 models with rigid or detachable side plates. XL '04 - up models with rigid side plates only. Mounting hardware included.

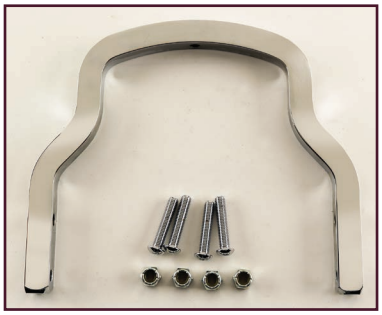
68-150

C NEW!



CHROME SISSY BAR UPRIGHT 8-3/4" TALL

Measures 8-3/4" wide shorty hand rail style. OEM 52737-94A

68-151 Fits XL '04 - up models with detachable side plates. Fits FXD '06-'17 models (except FXDF, FXDSE2, & 2010 FXDWG), Fits FXST '84-'05 models (except FXSTD) & FLST '06 models (except '06 FLSTFSE2,'07 FLSTF, FLSTFB, FLSTSE2, FLSTSB) No hardware.

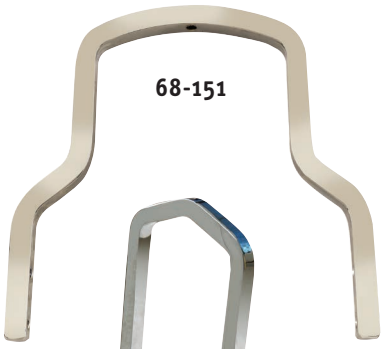
68-151

BLACK BACKREST PAD KIT

Measures 5-1/2" wide x 3.0" high x 1-1/4" deep. Comes with chrome hardware & surround bracket with a stainless steel cover plate. OEM 52513-94

68-152 Fits all models with short sissy bar. SOLD AS KIT
1/4 - 28 Allen seat bolt kit.

11

D. *BOLT-ON 15" CHROME SISSY BAR W/ CHROME SIDE MOUNT BRACKETS FOR FXR 1982-1992*

These bolt on sissy bars come complete with chrome side mount brackets and alll mounting hardware.

68-116 Fits FXR 1982 thru 1992

NEW!

D


68-116

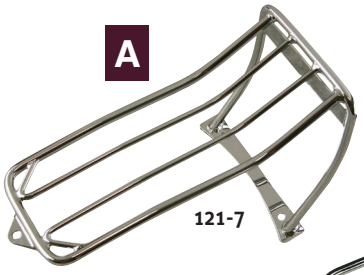

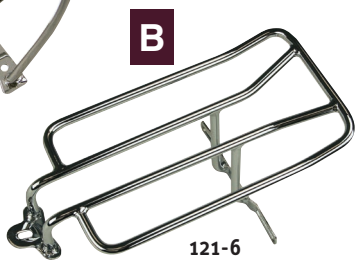

A. *LUGGAGE RACK*

Chrome steel fender rack fits 2000 & later FXST, FXSTS & FXSTB.

121-7 Rack. Replaces OEM 56481-03 SOLD EACH

B. *FENDER RACK FOR HERITAGE® & FAT BOY®*

Chrome plated fender rack made from 3/8" steel tubing is perfect for tying up items and protecting paint. Easily installs to stock seat bolt and license plate bracket for quick mounting and removal.

121-6 Fits Big Twin Heritage® & Fat Boy® models, 1986-2005. SOLD EACH

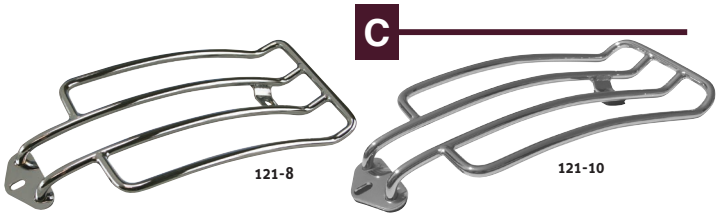

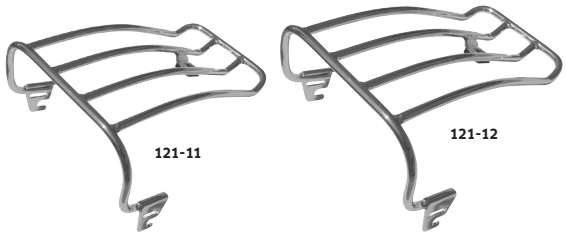

C. *LUGGAGE RACKS*

Chrome plated steel racks for solo bikes.

121-8 Fits 1995 thru 2003 XL.
121-10 Fits 1993 thru 2003 FXDWG.
121-11 Fits 1984 thru 1996 Softail®.
121-12 Fits 1997 thru 1999 Softail®.
121-13 Fits 2000 thru 2003 Softail®.

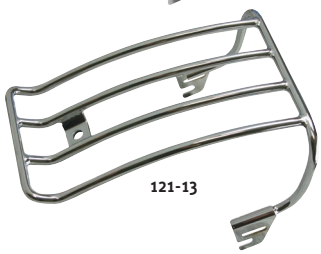

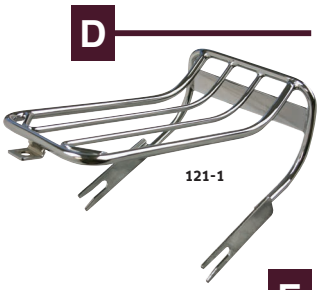

D. *FENDER RACK FOR FAT BOB®*

Chrome steel tubing contoured to match Fat Bob® fender. This rack keeps any pack you might tie up to the sissy bar from scratching up the rear fender paint. A good looking and functional accessory.

121-1 Fits all H-D® with Fat Bob® fender FXST, FXSTC, FXSTS and FX WG.

E. *LUGGAGE RACKS*

Chrome plated steel racks. SOLD EACH

121-19 Fits 94'-09' XL (8-1/2" L x 6"W)
121-20 Fits 91'-05' Dyna Glide (except FXDWG) (10" L x 6" W)
121-21 Fits 02'-05' FXDWG #56495-02
121-22 Fits 97'-05' FLHT, FLTR, FLHR, for solo rider
121-23 Fits 06'-UP FXST, FXSTB, FXSTS #60161-06
121-24 Fits 06'-UP FXDWG #56802-06
121-25 Fits 04'-UP XL stock
121-26 Fits 04'-UP XL custom
121-27 5'-UP FLSTF (Fat Boy)

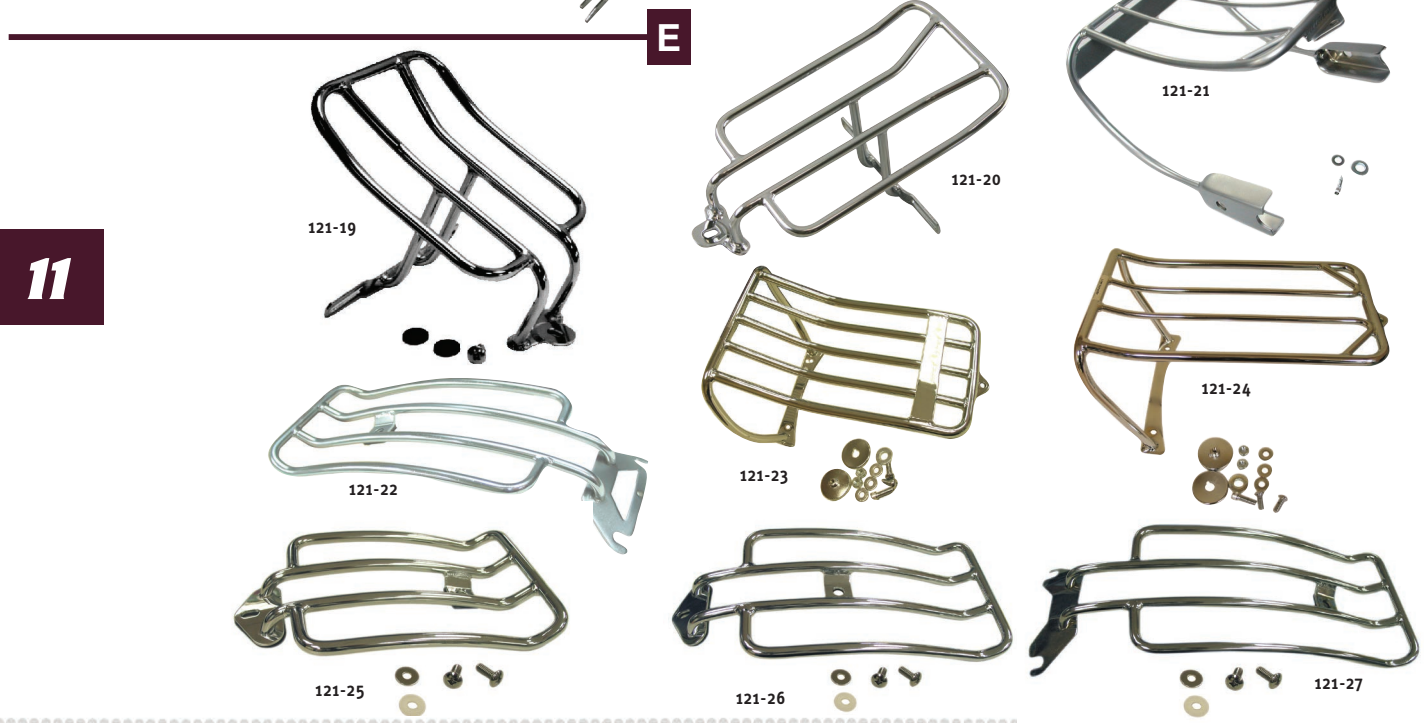



BLACK COWHIDE, RIGHT SHOWN



MAHOGANY BROWN COMPOSITE, LEFT

A. *SINGLE SIDE SADDLEBAGS*

Single side saddlebags for Softail® or Rigid applications.
Adjustable buckes attached from back.

THICK: 9-1/2" X 14" X 4".

74-49 Right side, Brown Cowhide. SOLD EACH
74-57 Right side, Black composite construction.
74-59 Right side, Mahogany Brown, composite construction.

THIN: 9-1/2" X 14" X 3".

74-51 Right side, Black Cowhide. SOLD EACH
74-53 Right side, Black, composite construction.



BLACK COMPOSITE, RIGHT SHOWN



BROWN COWHIDE, LEFT SHOWN

NEW!

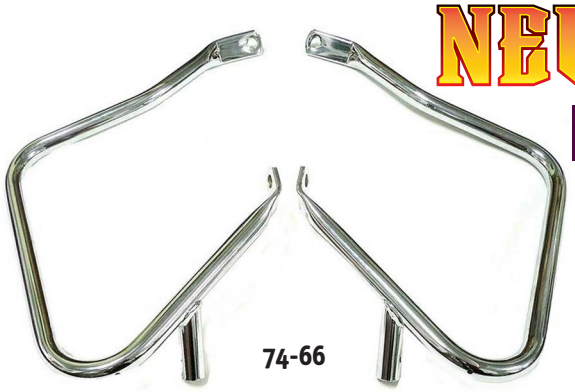

A

A. *SADDLEBAG GUARD KIT FOR FL 2014 - UP*

The New saddle bag guard kits are made from heavy duty steel and offer protection & style to any ride. While the guards offer additional support to the saddle bag they also protect the saddle bag leading edge from nicks, dents & road debris that causes damage. Designed to work with OEM saddle bag supports with all hardware included. Sold in pairs

Fits: 09-13 FLHT/FLHR without saddle bag rails & 14 later FLHR, FLHRC, FLHTCU/L FLHTK/L & FLHTKSE models

74-66 Chrome Solo 14 up FL saddle bag guard kit **SOLD AS SET**



B

B. *SADDLEBAG LOCK KIT*

Keep the contents of your soft saddlebags safe. With beautiful design and function, these new lock kits are easy to install and fit most soft-sided saddlebags. Does not fit FLHRC/FLHRS models.

74-402 Universal saddlebag lock kit. **SOLD AS KIT**

C. *SIDE COVER TRIM RAILS*

These custom side cover trim rail sets are made from quality welded steel rod, hand polished & beautifully chrome plated. This kit includes left & right chrome side cover trim rails and all necessary mounting hardware. Fits 93'-later Touring models.

74-426 Chrome side cover trim rail set. **SOLD AS KIT**



C



Trim Rail shown on side cover

D. *CUSTOM SADDLE BAG SUPPORT BRACKETS FOR TOURING MODELS '93 -'13*

These custom saddle bag support brackets are designed to be used when removing the rear highway bar and guard rails. Gives your saddle bags a clean streamline look, while they support & strengthen the underside saddle bag rails. Bolts directly onto the lower support rails, OEM 49194-85, OEM 90781-93, OEM 49149-09 and fits Touring models '93-'13. Available in a chrome or gloss black finish. Sold in pairs.

74-308 Chrome saddle bag support kit Touring models 93-13

74-309 Black saddle bag support kit Touring models 93-13

NEW

D

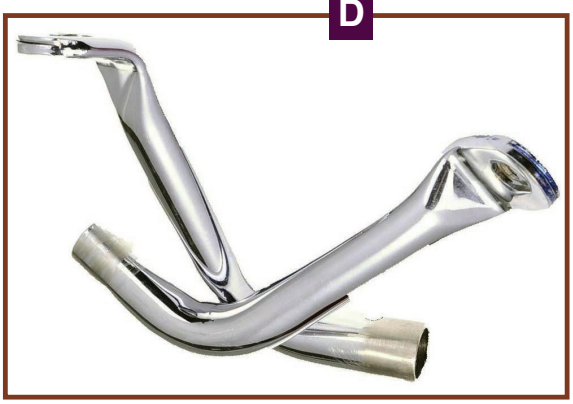



A. *AIR DEFLECTORS FOR TOURING MODELS*



These mid-frame air deflectors are tested for severe duty & extreme temperature applications. They attach to the frame below the seat and direct heat away from the rider to improve comfort on hot summer rides. Easy to install w/all hardware included. For 01'-later touring models, does not fit models equipped w/adjustable rider backrests.

13-110 Black mid-frame air deflector kit.
SOLD AS KIT

B. *TOUR BOX MOUNTS*

These new Tour box mounts are constructed from durable steel with a chrome or gloss black finish. Allows quick removal of Tour box on Dresser models. Compatible with OEM quick-detach mounts. Includes hardware to attach Tour box to mount.
Sold each.

74-500 Chrome Quick-detach Tour box mount kit '99-'08 models. OEM 53276-04
74-501 Black Quick-detach Tour box mount kit '99-'08 models. OEM 53276-04

74-502 Chrome Quick-detach Tour box mount kit '09-'13 models. OEM 53276-09
74-503 Black Quick-detach Tour box mount kit '09-'13 models. OEM 53276-09

NEW

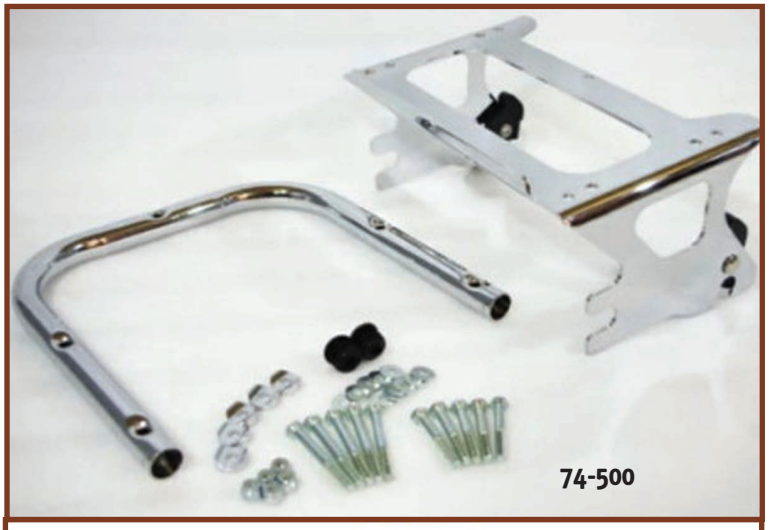





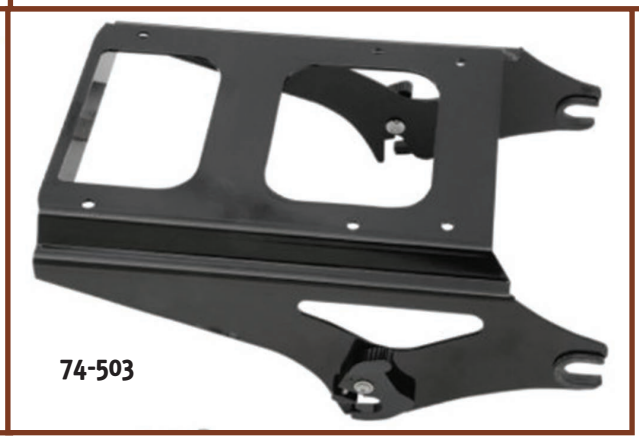

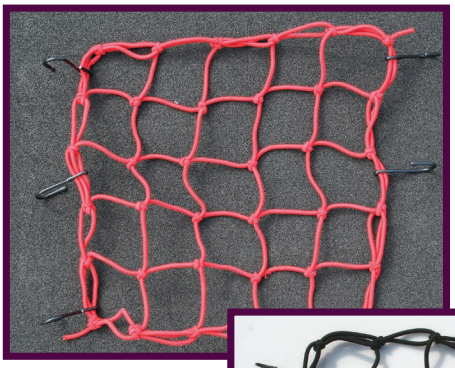

A

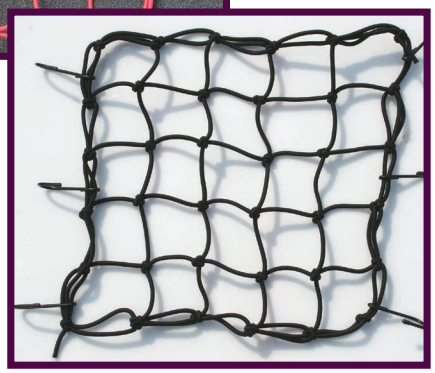

A. *CARGO NETS*

Cargo nets are the hot step up for things that are hard to strap on with conventional bungee cords. Perfect for helmets and larger, awkward items. 15" x 15" With six hooks which are coated to help prevent scratches.

55-8 Black cargo net. OEM 98170-88T. SOLD EACH
55-9 Red cargo net.

B. *BLACK TIE DOWN/BUNGEE CORDS*

Highest quality material. Black color. Superior tension, full 3/8" diameter, steel capped ends and extra strong plastic covered hooks.
NOTE: All measurements shown are end to end.
55-7 Single strap, 24" long. SOLD EACH

B

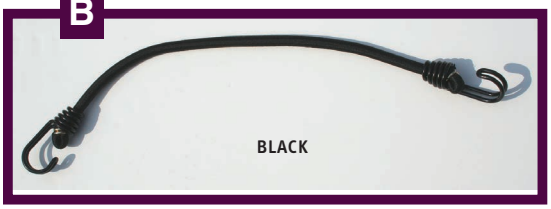



C

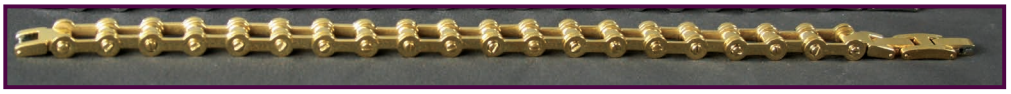

C. *ULTIMA® GOLD CHAIN BRACELET*

Ultima® top quality surgical stainless steel bracelets. Dual clasp offers length adjustability to help fit most everyone. 9" long when both clasps are used. Available in gold chrome & premium polished finish.
245-11
9" bracelet, gold chrome finish

D



D. *QUICK RELEASE HELMET BUCKLE*

This is a fast & convenient way to buckle/unbuckle your helmet chin strap. Exceeds safety & durability standards in both DOT 218 and *Z90.1 1992 (*same testing requirements as Snell). Patented (Patent No. 4,559,679) laboratory tested design features construction of tempered steel & high impact nylon. Metal-to-metal locking feature. Easy assembly with included instructions.

61-1 Black Quick Release Helmet Buckle. SOLD EACH
FOR BEST PRICE BUY BOX OF TWELVE

E

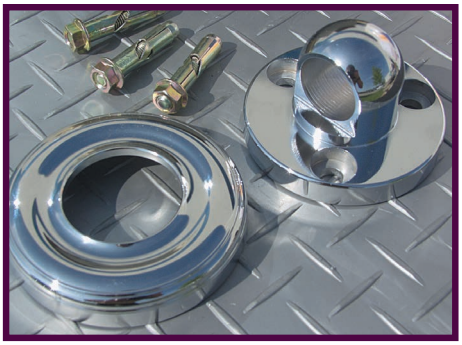

E. *ADAPTOR RING FOR LOCKDOWN*

Boltdown is a maximum security ground anchor turned from a solid steel bar, case-hardened and then show chromed. Will last a lifetime no matter how many times you move it to a new location. Bolt it to your trailer to secure bikes and bolt it back in the garage when home. Guaranteed for life. Patent & patent infringement insured.

102-21 Adapter ring. Sits on top of the cap to make the padlock hole smaller to prevent access to the anchoring bolts. Use two if possible. For example, eyelet hole dia. with 1 adapter ring installed 25.4mm, or with 2 adapter rings installed 13.5mm. SOLD EACH

Chemical Shop Tool

12

CLEANERS, POLISHES,
LUBRICANTS, PAINTS, SEALANTS,
ENGINE & GEAR OIL,
ESSENTIAL MECHANICS TOOLS

A



A. *VHT ENGINE ASSEMBLY LUBE*

VHT Engine Assembly Lube adds the high performance edge to professional engine building and restoring. It drastically reduces friction on all moving metal parts with precision tolerances, including wrist pins, cams, lifters, gears, bearing and timing chains. VHT Engine Assembly Lube can prevent permanent damage caused by seizing and galling, because it will cling tenaciously to all metal surfaces and it will provide essential lubricity before the engine's oiling system can establish a permanent oil film.

103-175 7 oz. Aerosol. SOLD EACH

PJ1 CHEMICALS

B



103-25



103-26

B. *PJ1 FAST BLACK™*

PJ1 Gloss Black 500° Engine & Case Paint. High gloss finish. Restores case & engine components. Prevents rust & corrosion. Resists chipping/rubbing off.

103-24 11 oz can. SOLD EACH

PJ1 Gloss Black Epoxy Paint. High gloss durable finish. Prevents rust & corrosion. Resists chipping/rubbing off.

103-25 11 oz can. SOLD EACH

PJ1 Flat Black 1500° Exhaust Paint. For all 4 stroke & 2 stroke exhaust systems. Factory-like smooth finish. Prevents rust & corrosion. Resists chipping/rubbing off.

103-26 11 oz can. SOLD EACH

PJ1 Satin Black 500° Engine & Case Paint. Semi gloss finish. Restores case & engine components. Prevents rust & corrosion. Resists chipping/rubbing off.

103-27 11 oz can. SOLD EACH

PJ1 Wrinkle Black 500° Texture Paint. Provides durable textured finish. Dissipates heat quicker. Prevents rust & corrosion. Resists chipping/rubbing off.

103-28 11 oz can. SOLD EACHD

C



103-19

D



103-15

E



103-17

C. *PJ1 PENETRATING CABLE LUBE*

Cleans and lubricates in one application. Makes cables operate smoother. Extends cable life. Easy-to-use formula.

103-19 16 Ounce can. SOLD EACH

D. *PJ1 HEAVY DUTY CHAIN LUBE*

Super tacky formula won't fly off. Extends chain and sprocket life. Prevents rust and corrosion. Ideal for on/off road applications.

103-15 5 Ounce can. SOLD EACH
103-16 20 Ounce can.

E. *PJ1 BLUE LABEI™ CHAIN LUBE*

Super tacky formula won't fly off. Extends chain and sprocket life. Prevents rust and corrosion. Ideal for on/off road applications.

103-17 8 Ounce can. SOLD EACH
103-18 20 Ounce can.

PJ1 CHEMICALS

A. PJ1 FORK TUNER™ OIL

Three different multi-viscosity weights for precise tuning. Consistent smooth damping action for more predictable ride in summer or winter temperatures. Fine tune your ride to your personal preference. Contains preservative to prevent messy seal leaks. Non-fading, non-foaming formula. 16 Ounce bottle.

103-54 Light; SAE 15W. SOLD EACH
103-55 Medium; SAE 20W.
103-56 Heavy; SAE 30W.

B. PJ1 SUPER CLEANER™

Great for all preassembly of motor, surface preparation for paint, decals and grip installation. Cleans carburetors, injector systems, disc brake rotors, pads, brake shoes, spark plugs, electrical switches... Everything! Removes moisture from ignition systems. Harmless to most plastics and paint.

103-29 13 oz can. SOLD EACH

C. PJ1 SPRAY WASH™ & DEGREASER

Deep penetrating formula dissolves grease, dirt and oil in one step. Easy to use — spray on and hose off. Leaves a pleasant smelling sparkling clean surface. No annoying vapors.

103-30 15 oz can. SOLD EACH

D. PJ1 SPRAY FOAM FILTER TREATMENT

Easy, no-waste application. Super tacky to filter out dirt and sand. Water repelling. Makes engine breathe more efficiently.

103-13 13 oz can. SOLD EACH

E. PJ1 SPRAY FABRIC FILTER OIL

For gauze type air filters. Filters out dirt and sand. Water repelling. Makes engine breathe more efficiently.

103-14 15 oz can. SOLD EACH

F. WHEEL BEARING GREASE

Lithium complex high temperature grease. Meets the requirements for disc and drum brakes. Good temperature stability. Protects against rust and oxidation. May also be used in general purpose applications.

103-300 1 lb. Container grease. SOLD EACH

A



103-54

B



103-29

C



103-30

D



103-13

E



103-14

F

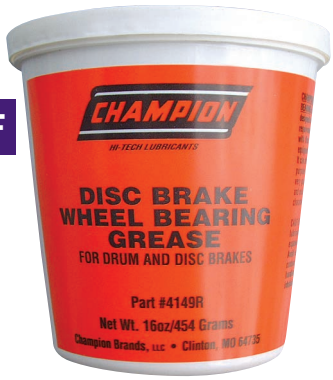



A

B







ORDER
CASE QTY.
FOR BEST PRICE!

THREEBOND PRODUCTS

A. THREEBOND GRIPLOCK

A high strength adhesive specially formulated to keep grips in place without damaging the rubber. Griplock puts an end to grips twisting or sliding off.

103-86 ThreeBond Griplock. SOLD EACH

B. THREEBOND THREAD LOCK PRODUCTS

No matter what locking properties are required, one of ThreeBond's thread locking products will get the job done right the first time. ThreeBond's Thread Lock line-up includes high strength retaining properties for various threads, screws, bolts, bearings, piping joints, gears, pulleys, fans, and studs which are not frequently removed, and must remain secure for safety and/or structural integrity reasons.

ThreeBond Hi Temperature Thread Lock is a new sealing and locking agent made to withstand extreme temperatures without weakening. It incorporates the various strengths of anaerobic locking agents, plus a heat-resistant element capable of withstanding 200°C, which makes it ideal for sealing engine and exhaust components.

At the bottom end of the range, ThreeBond's Low Strength/Frequent Repair product is perfect for small screws and bolts which are frequently removed, and require a force of only 10 - 20% greater than that used for tightening.

All ThreeBond Thread Lock products inhibit the development of leaks and rust, and are not affected by oils, chemicals, various gasses, salt water or organic solvents. All four products widen the range of tolerance limits, thus streamlining assembly operations and eliminating the need for lock washers. All four products are available in 10 ml and 50 ml containers.

Low strength (Blue) Frequent Repair.

103-85 10 ml Bottle. SOLD EACH

103-87 50 ml Bottle.

Medium strength (Red) Bearing & Stud.

103-82 10 ml Bottle. SOLD EACH

103-88 50 ml Bottle.

Medium strength (Red) High Temperature.

103-83 10 ml Bottle. SOLD EACH

103-89 50 ml Bottle.

High strength (Green) Retaining.

103-84 10 ml Bottle. SOLD EACH

103-90 50 ml Bottle.

A. *LIQUID HORSEPOWER OCTANE BOOSTER*

- Boosts octane 5-10 points
- Combustion catalyst improves fuel mileage and performance
- Cleans fuel system
- Upper cylinder lubricant
- Stabilizes fuel

103-250 Liquid Horsepower, 1 oz bottle, treats 5 gallons. SOLD EACH
103-252 Liquid Horsepower, 6 oz bottle, treats 30 gallons. SOLD EA.

A



103-252



103-250

B. *ULTIMA® D.O.T. 5 BRAKE FLUID*

Silicone based DOT 5 brake fluid is specified for use in H-D® brake systems. Ultima® DOT 5 brake fluid is designed for severe service applications and will not boil at temperatures up to 500°F. Will not absorb moisture. Premium quality at at budget price!

103-197 Ultima® DOT 5 brake fluid, 12 ounces. SOLD EACH
BEST PRICE BREAK — CASE OF 12 EACH

B



C. *CHAMPION SYNTHETIC D.O.T. 4 BRAKE FLUID*

Provides the ultimate in high temperature protection, moisture resistance, and lubricity for ABS, hydraulic drum, disc braking systems, and hydraulic clutches requiring DOT 4 & 3 brake fluid.

103-704 Champoin synthetic brake fluid, 12 ounces. SOLD EACH

C



D. *EZE BLEEDER*

Save time and money using the EZE Bleeder. Bleed air from the brake system by starting at the low points. Inject brake fluid into the caliper in its natural direction up to the the master cylinder. Instructions included.

97-208 EZE Bleeder. SOLD EACH

D



E. *ROCKET FUEL*

Increases motor octane. Increases research octane. Increases anti-knock rating. Requires **NO** mixture adjustment. Reduces engine varnish and sludge. Aids valve and seat lubrication. Helps protect pistons and heads. Releases full torque and power. **Warning:** Not for Jap bikes. Formulated for use in Harley® engines only.

103-191 One-ounce pocket-size squeeze packet; treats 2.5 to 5 gallons of gas. Sold as 55 individual packets in point-of-purchase display tin.
NOTE: For best price order quantity of two tins. SOLD AS BOX

E



F. *ULTIMA® COOL CRUSIN' OIL TREATMENT*

Check out Ultima®'s new Cool Crusin' oil treatment. Recommended for all hi-performance V-twins and Harley-Davidson® motorcycles.

- Cools engine oil and gear lube
- Cool cylinder head temperature
- Dramatically improves engine oiling.
- Doubles life of all lubricated parts.
- Reduces trans noise/clunk

103-1 Ultima® Cool Crusin' oil treatment, 16oz. SOLD EACH

F



A



103-110



103-112

ULTIMA® OIL

A. *ULTIMA® PREMIUM BLEND STRAIGHT WEIGHT ENGINE OILS*

Ultima® Engine Oils have been specifically engineered to provide protection for all 4 Stroke Engines even in the most extreme temperature environments. Ultima® Oils carry one of the best Anti wear packages available for maximum performance and longer engine life. All of our Premium Blend motor oils are produced using "severe hydro-cracked" low volatility base oils. This process produces base oils that are as clear as water, provide high natural resistance to oxidation and thermal breakdown; resist sludge formation and combat corrosive acids from fuel combustion better than less expensive hydro-treated base oils. Straight weight Motor Oils are recommended for use in Engines where higher ambient temperatures are experienced and in older cast iron cylinder engines requiring high thermal stability. **Exceeds all known motorcycle manufacturers warranty requirements including API SF,SG,SH,SL and JASO MA and does not void new vehicle warranty. Check manufacturer's recommendation for viscosity and change interval.**

BENEFITS INCLUDE

- High Zinc additive resists wear and provides exceptional load carrying characteristics
- Resist high temperature oxidation and deposit formation
- Strong detergents keep engine cleaner

103-110	Ultima® Oil 50W	SOLD EACH/CASE BOX IS 12PC
103-111	Ultima® Oil 60W	
103-112	Ultima® Oil 70W	

B. *ULTIMA® PREMIUM BLEND MULTI VISCOSITY 20W50 SYNTHETIC BLEND*

Ultima® 20W50 Premium Blend Oil is a Synthetic Blend specifically engineered to provide outstanding service as a **4 Stroke Engine Oil, Primary and Transmission Oil**. This premium synthetic blend motor oils is produced using "severe hydro-cracked" low volatility base oils mixed with pure synthetic base oils producing a higher resistance to oxidation and thermal breakdown than conventional base oil technology is capable of. Our advanced multi-grade should be used in all Air Cooled engines where high temperature or high stress applications might occur. It will maximize power transfer performance, provide critical protection against ring wear and piston scuffing and offers excellent reserve alkalinity to absorb acids that degrade clutch material and performance.. **Exceeds all known motorcycle manufacturers warranty requirements including API SF,SG,SH,SL and JASO MA and does not void new vehicle warranty. Check manufacturer's recommendation for viscosity and change interval This Oil is recommended by Ultima® for protection during break in periods on all Ultima® Brand Engines.**

BENEFITS INCLUDE

- High Zinc additive resist wear and provides maximum load carrying characteristics
- Higher resistance to oil oxidation and deposit formation than conventional oils
- Strong detergents keep engine cleaner , even at elevated temperatures
- Formulated to resist extreme sheer stress imposed by transmission gears when used as transmission oil and includes proper friction modifiers to provide wet clutch protection and clutch control.

103-114 Ultima® Oil 20W50 Synthetic Blend

SOLD EACH/CASE BOX IS 12PC

B

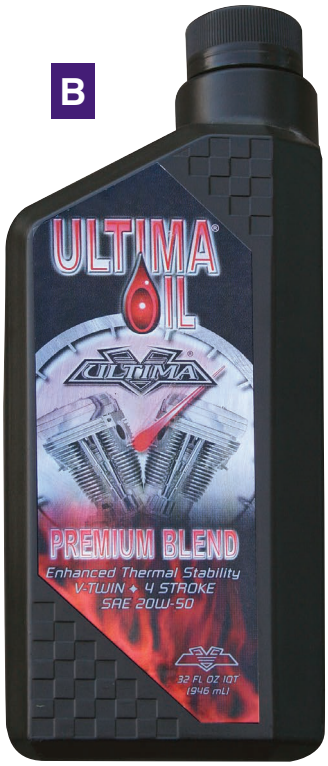

ULTIMA® OIL

ULTIMA® RACING 20W50 FULL SYNTHETIC

Ultima® Racing 20W50 motor oil is a full synthetic olefin-ester based oil specifically engineered to provide protection during extreme service conditions where conventional oils fail. This extreme performance multi-grade motor oil should be used in all 4 Stroke engines where maximum service life and top performance are required and expected. This oil will maximize power transfer performance, provide critical protection against ring wear and piston scuffing and improve the wear characteristics in any engine, even under extreme conditions. This oil is not recommended as a "break-in oil" for any Air Cooled V-Twin and should not be mixed with petroleum based oils. When switching to Ultima® Full Synthetic Oil , change oil and filter for a complete fluid change. **Exceeds all known motorcycle manufacturer's warranty requirements including API SF,SG,SH,SL and JASO MA and does not void new vehicle warranty. Check manufacturer's recommendation for viscosity and change interval. This Oil is recommended by Ultima® for protection AFTER break in periods on all Ultima® Brand Engines.**



BENEFITS INCLUDE

- Reduces friction on all contact surfaces
- Lower engine operating temperature
- Maximize horsepower
- Improves fuel economy
- Maximize engine life

103-115 Ultima® Oil 20W50 Full Synthetic

SOLD EACH/CASE BOX IS 12PC

THE PERFECT COMBINATION OF 2 ULTIMA® PRODUCTS!





GREAT PAIR!!

ULTIMA® OIL



A. *ULTIMA® RACING 80W140 GEAR OIL*

Ultima® Full Synthetic Transmission Oil is designed for use in all manual transmissions where the clutch uses a separate lubricant. This is a highly effective and efficient lubricant designed for extended use and maximum performance. We strongly recommend this oils use after Transmission break in for Maximum component performance and life.

BENEFITS INCLUDE

- Ultimate gear and bearing protection during high temperature operation.
- Excellent chemical stability to prevent oil oxidation and corrosion.
- Unsurpassed shear & load stability preventing metal-to-metal contact while shifting at high speeds & temperatures.
- Quieter operation and smoother shifting
- Helps extend component life & improve power transfer

This Heavy Duty Gear lubricant specially engineered for extended use in manual transmissions where API GL-4, GL-5, MT-1 and MIL-L-2105D are specified. Additional specific applications are Mack GO-J Plus, SAE J 2360, Navistar TMS 6816, Dana Spicer SHAES256, Eaton PS-163, Arvin Meritor TP-9539. **Check manufacturer's recommendation for viscosity and change interval. This Oil is recommended by Ultima® for protection in all Ultima® Brand Transmissions . Not for use in wet clutch applications.**

103-117 Ultima® 80W140 Full Synthetic Gear Lube

SOLD EACH/CASE BOX IS 12PC



B. *ULTIMA® PREMIUM 80W90 GEAR OIL*

Ultima® 80W90 Gear Oil is our mineral based general purpose gear oil for use in all on and off road gear box applications. We recommend this oil in all Ultima® transmissions for break-in and continued GL-3 service where mineral based lubricants are recommended or preferred.

BENEFITS INCLUDE

- Great oxidation control under high thermal conditions
- Protection against excessive contact wear, pressure and corrosion
- Anti-foaming properties
- Universal compatibility with all mineral based and synthetic fluids

Recommended for use in all major transmission, final drive and gearboxes requiring API GL-3 service classification or US Steel 224, AGMA 9005 EP or Cincinnati Machine approvals. **Check manufacturer recommendations for viscosity and change interval.**
This Oil is recommended by Ultima® for protection in all Ultima® Brand Transmissions during break-in.

103-116 Ultima® 80W90 Gear Lube SOLD EACH/CASE BOX IS 12PC

A. *RECHARGER FILTER CARE SERVICE KIT*

A six step maintenance system designed to recharge any K&N Filtercharger® air filter. Completely restores air flow efficiency so your Filtercharger® performs like new!

103-201 Service kit. Includes 6.5 oz. air filter spray oil, 12 oz. filter cleaner and service decal. — SOLD AS KIT

103-12 K&N air filter oil, only. — SOLD EACH

ORDER CASE QUANTITY (12) FOR BEST PRICE!

A



B. *BRUSHES*

97-318 Stainless steel wire brush with wood handle. — SOLD EACH

97-319 Brass wire brush with wood handle.



B

C. *BIN BOXES*

To make the most of your parts storage shelf space, use spacesaving **U.S.A. MADE** parts bins. 200 Lb. Test corrugated fiber board, treated for oil resistance — Mack Oil Shield™, yet some of the lowest priced bins in the world. An unbeatable bin for small parts inventory control, stocking parts at assembly stations, parts display, and the other small parts storage situations you are frequently faced with in your business. They keep things where your know you can find them, see them, and use them.

97-14 Width 2", length 12", height 4". — SOLD EACH

97-15 Width 4", length 12", height 4".

97-16 Width 8", length 12", height 4".

U.S.A. MADE

BRUSHES

C

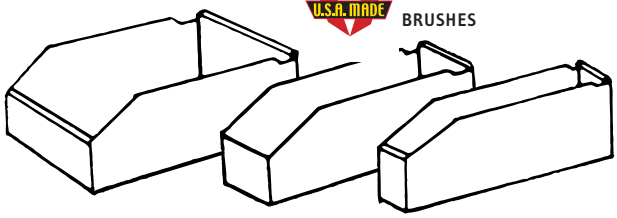

D. *CAM GEAR GAUGE PINS*

Gauge pins are used to determine correct size cam gears to use if a too-tight or too-loose fit is found. Consult a repair manual for instructions on proper use of gauge pins.

97-181 Gauge pins; .105 diameter. — SOLD AS PAIR

97-182 Gauge pins; .108 diameter.

D



97-42

E. *TAPPET ROLLER TOOL*

Use this **U.S.A. MADE** tool to ease and simplify removing and replacing tappets on all H-D® models.

97-57 Tappet roller tool for Big Twin, Sportster® and Evolution®. — SOLD EACH

E

U.S.A. MADE

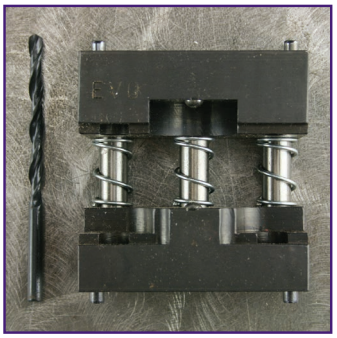



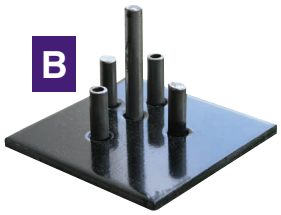



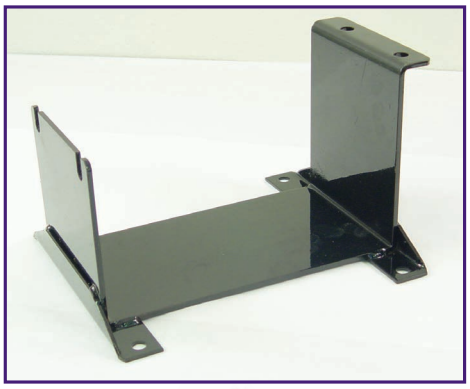





97-126

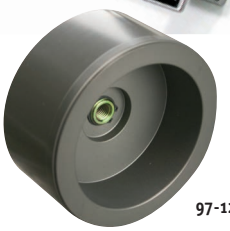

97-127

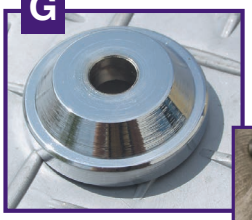

97-31

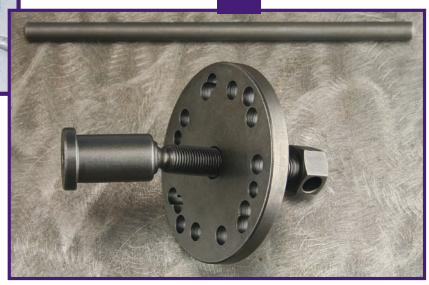



A. *OIL FILTER WRENCH WITH CUTOUT*

97-60 Oil filter wrench with cutout clearance for crank position sensors. SOLD EACH

B. *TWIN CAM@ CHAIN TOOL*

77-909 Cam chain tensioner shoe installation & removal tool SOLD EACH

C. *OIL PRESSURE SWITCH WRENCH*

Use extension for Big Twin Evolution®, for Sportster® 1983 & 1984, use without extension (short).

97-106 Wrench. OEM 34816. SOLD EACH

D. *ENGINE STANDS*

Black powder coated engine stands. SOLD EACH

97-173 Engine stand for Big Twins 1999-present & Twin Cam 88.

97-174 Engine stand for Big Twins 1936-1998.

E. *PARK TOOL ALUMINUM VISE INSERT*

Provides a safe way to hold small suspension shafts & fittings securely without damage — perfect for suspension overhauls! Magnetic strips attach to vise jaws for easy, trouble free use.

97-301 Heavy duty aluminum jaws have 3 machined openings to hold shafts from 7mm to 15mm. SOLD AS SET

F. *CLUTCH SPRING TOOLS*

Diaphragm clutch spring compression tools. Makes it easy to remove and re-install retainer ring. **U.S.A. MADE**.

97-126 Fits Big Twin 1990 & later and Sportster® 1991 & later.

97-127 Fits Sportster® 1984 thru 1990. SOLD EACH

G. *CLUTCH REMOVAL TOOLS*

Allows removal of clutch pressure plate, springs and spring retainer as one unit. Unique, self-centering design, polished & chrome plated.

97-31 Clutch removal tool; fits Big Twin 1941 thru 1984. SOLD EACH

Used to lock outer shell to inner hub for removal and installation.

97-32 Clutch lock plate; fits Big Twin 1941 thru 1984. SOLD EACH

H. *CLUTCH HUB PULLER*

Eliminates the need to remove kickstart cover when removing clutch hub.

97-3 Fits all Big Twins 1941 thru 1983, including hubs with 10 long studs. SOLD EACH

I. *CLUTCH ALIGNMENT TOOL*

97-432 Clutch Alignment Tool. SOLD EACH

NEW!

A. *WHEEL BEARING REMOVAL & INSTALLATION KIT*

Wheel bearing removal and install tool is a must for every shop. Removes and installs 3/4 25mm & 1" sealed bearing for 2000-later wheels.

97-290 Wheel bearing removal & install kit. SOLD AS KIT

A



B. *FORK CAP SOCKET*

97-400 Fork cap socket.

B

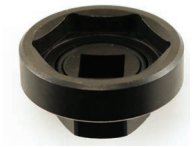

C. *39mm & 41mm FORK SPRING COMPRESSOR KIT*

97-402 Fork spring compressor kit.

C



D. *STEERING HEAD BEARING RACE INSTALLATION TOOL*

97-409 Steering head bearing race installation tool.

D



E. *SWINGARM PIVOT BEARING PULLER*

97-407 Swing arm pivot bearing puller tool.

F. *MAIN-SHAFT BEARING RACE PULLER / INSTALLER SET*

97-401 Main shaft bearing race puller & installer set.

E



F



G. 5 SPEED MAIN DRIVE GEAR TOOL

97-414 5 Speed main drive gear tool.

G



H. *MAIN SHAFT SPROCKET NUT SOCKET*

97-420 Main shaft sprocket nut socket.

H




A

A. *CLUTCH SPRING COMPRESSION TOOL*

97-126 Clutch spring compression tool.


B

B. *MAIN DRIVE GEAR SEAL INSTALLER TOOL*

97-421 Main drive gear installer tool.

C. *FLYWHEEL NUT SOCKET TOOL SET*

97-410 Flywheel nut socket tool set.

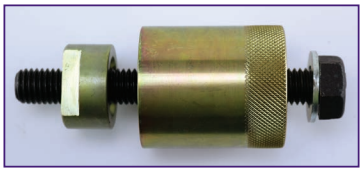
C

D. *INNER CAM BEARING CAM BEARING REMOVAL & INSTALLATION TOOL KIT*

97-415 Inner cam bearing removal & installation tool kit


D

E. *CAM / CRANK SPROCKET LOCKING TOOL*

97-412 2006-present Dyna and 2007-present FL & FXST.


E

F. *CAM / CRANK SPROCKET LOCKING TOOL*

97-413 1999-06 FL, 1999-05 FXD, and 2000-06 FXST.


F

G. *CAM COVER PULLER*

97-419 Cam cover puller.


G

H. *CAM CHAIN TENSIONER TOOL*

97-408 Cam chain tensioner tool.

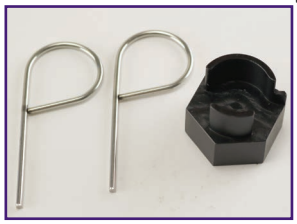
H

I. *CRANKSHAFT TURNING / ROTATING TOOL*

97-431 Crankshaft turning/roatating tool.


I

NEW!

J. *ROCKER BUSHING & BEARING SERVICE TOOL SET*

97-418 Rocker bushing & bearing service tool set.


J





WRIST PIN CLIP REMOVAL & INSTALLATION TOOL

97-417 Wrist pin clip removal & installation tool.

PISTON PIN KEEPER TOOL

97-416 Piston pin keeper tool.



A

A. *CLUTCH HUB PULLER*

NEW!

Use to remove clutch hub without removing clutch release rod. Puller works on wet and dry clutches. 4 bolts included for dry clutch removal. Pat. Pending

97-422 For all H-D® Big Twin 1936-90. SOLD AS KIT



B

B. *OUTER CAM BEARING PULLER*

It is designed to remove the bearing straight from the camshaft without slipping or binding. Pat. Pending

97-423 For H-D® 1999 – 2006 models.. SOLD AS KIT



C

C. *INNER CAM BEARING PULLER*

Easily removes inner cam bearing without damaging the crankcase. It also can keep rollers from falling into the crankcase during removal. Pat. Pending

97-424 For H-D 57-90 Sportster, 57-85 XL and 87-90 Buell SOLD AS KIT



D

D. *ALTERNATOR ROTOR REMOVER*

It will protect threads on sprocket shaft from damage while pulling rotor free from its magnetic hold.

97-425 For Harley-Davidson® 1997 to present FLHT Ultra or any Big Twin with a 45 AMP high output charging system. SOLD AS KIT

E. *TRANSMISSION DOOR REMOVER TOOL*

Use to remove the complete door with gears and shafts from the transmission. Just prepare the trans for disassembly, bolt this tool to the outside of door, and place the two supplied press pins into the two screw holes of trans case. Thread in two of the screws, securing the door to case, and the door is pulled from case. Can be used with transmission in frame.

97-426 Fits all 2006 Dyna and 2007 FLHT & FXST. SOLD AS KIT

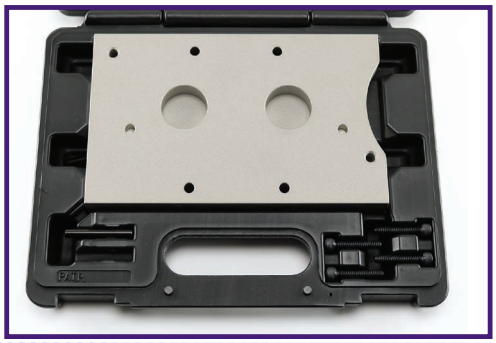

E

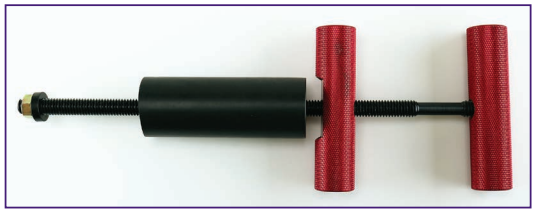

A. *WRIST PIN REMOVAL & INSTALLATION TOOL*

97-406 Wrist pin removal and installation tool.



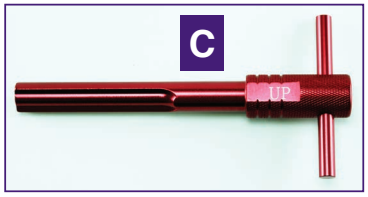

B. *TAPPET BLOCK / OIL PUMP ALIGNMENT SCREWS*

97-403 Set of three alignment screws.

C. *IGNITION SWITCH HOUSING ALIGNMENT TOOL*

97-405 Ignition switch housing alignment tool.

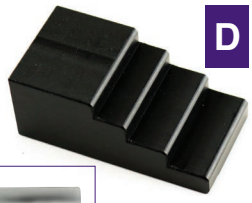

D. *PRIMARY DRIVE HOLDING TOOL*

97-404 Primary drive holding tool.



E. *TIMING PLUG*

91-104 Timing plug.



F. *TAPPET SCREEN PLUG TOOL*

97-411 Tappet screen plug tool.



G *STEERING HEAD CUP/RACE PRESS*

The Headcup Press easily and accurately presses steering head races, and select other applications, eliminating damaged or misaligned races/cups; dented and chipped frames. Our unique design permits quick release after races are seated. Multiple bushings provide a precise fit and alignment for most brands and, like all other Park Tools, has a limited lifetime warranty.

97-360 Head cup/race press **SOLD EACH**



H. *STEERING HEAD CUP REMOVER*

The Park Took head cup remover makes steering head bearing race/cup removal simple. The tool is pulled through the steering tube until the flared ends snap in behind the race/cup. A hammer strike on the tool head removes the race/cup. Now there is no reason to damage another race. Spring blades fit most brands with 35-55 mm races. Made in USA.

97-361 Steering head cup remover **SOLD EACH**



I. *SHOCK SPANNER*

97-2 Works on all H-D® V-Twins 1958 & later, & XL 1958 thru 1974. OEM 94700-65. **SOLD EACH**

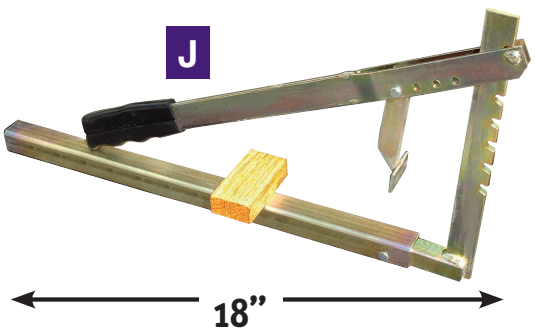

J. *PORTABLE MOTORCYCLE TIRE BEAD BREAKER*

This is a great tool for the home work shop or the touring enthusiast. It will break the bead on any motorcycle wheel that is open in the middle. It can not be used on solid wheels. The tool breaks down for easy storage in saddlebags or bed roll.
USA. MADE. Includes instructions.

97-207 Motorcycle tire bead breaker. **SOLD EACH**

A. *INTAKE MANIFOLD WRENCH FOR EVOLUTION®*

Special design for hard-to-reach Evolution® intake manifold bolts on Big Twin & Sportster®.

97-274 Intake manifold wrench. SOLD EACH



B. *STAINLESS STEEL SAFETY WIRE*

Wire comes in a handy 1 pound dispensing canister. Meets ASTM A580 chemistry. SOLD AS ROLL

18-790 22 gage safety wire, .025" dia.; aprox 595 ft. per roll.
18-791 20 gage safety wire, .032" dia.; aprox 362 ft. per roll.
18-792 18 gage safety wire, .041" dia.; aprox 221 ft per roll.



C. *3 PIECE BOX END COMBINATION WRENCH SET*

This 3 piece box end combination wrench set stores neatly in small tool bags and eliminates the need for 6 different tools. Combination wrench sizes are: 7/16" & 1/2", 9/16" & 5/8" and 11/16" & 3/4".

97-215 Combination wrench set. SOLD AS SET



D. *TIRE IRONS*

High tension steel.

97-11 Straight tire iron, 9" x 1".
97-7 Straight tire iron, 17" x 1". SOLD EACH
97-6 Curved tire iron, 17" x 1".



97-11



97-7



97-6

E. *HOSE CRIMP TOOL & CLAMPS*

97-104 Hose band clamp crimp tool. SOLD EACH

66-204 11/32" I.D. For chain oiler. OEM 9992. SOLD EACH
66-205 7/16" I.D. For chain oiler. OEM 9996.
66-206 17/32" I.D. For 1/4" fuel line. OEM 10014.
66-207 19/32" I.D. For oil line. OEM 10084.
66-208 11/16" I.D. For oil line. OEM 10020A.
66-209 13/16" I.D. For oil line. OEM 10086.

BUY CLAMPS AT QTY. 25 OR 50 FOR BEST PRICE



97-104



66-204

66-205



A. *TRAP DOOR BEARING INSTALL/REMOVAL TOOL FOR TWIN CAM®*

It can accurately install a lubed ball bearing into the transmission trap door, also removes bearing. It fits Twin Cam® Harley-Davidson® 6-speed Cruise, 2006 Dyna's and all 2007-up Twin Cam® models.

97-428 Trap door bearing install/removal tool. SOLD AS KIT



B. *BALANCER INNER BEARING INSTALL/REMOVE*

Used to install or remove the inner balancer bearing mounted in the left engine case. It can all be done on a work bench without using an arbor press. Fits all Beta Twin Cam models® 2000 to present. Pat. Pending

97-429 Balancer inner bearing install / removal tool. SOLD AS KIT



C. *6 SPEED BEARING INSTALLER TOOL*

Use for 6-Speed main drive case bearing installer, holds bearing square to its bore, eliminates marring of the bearing bore. It fits H.D FXD '06-up & Big Twin '07-up 6 Speed models.

97-430 6 Speed bearing installer tool SOLD AS KIT



SEE OUR LINE OF FINAL DRIVE CHAINS
SEC 7/ PAGE 67

A. *CHAIN BREAKER & RIVETING TOOL KIT*

97-21

This Kit is supplied with adequate components to break chains from #35 to #630. It can be used on cam chains and drive

Contents:

- Handle
- Lever
- Spring
- Two press plates
- Large anvil and small anvil
- H.S.S. Rivet tip for riveting hollow nose master links
- Body, alignment bolt and push bolt
- H.S.S. 2.2mm breaking tip for most cam chains
- H.S.S. 2.9mm breaking tip for chains #25 - #35 only
- H.S.S. 3.8mm breaking tip for chains #428 - #630
- Upper and lower guide for 2.2mm breaking tip

A NEW!

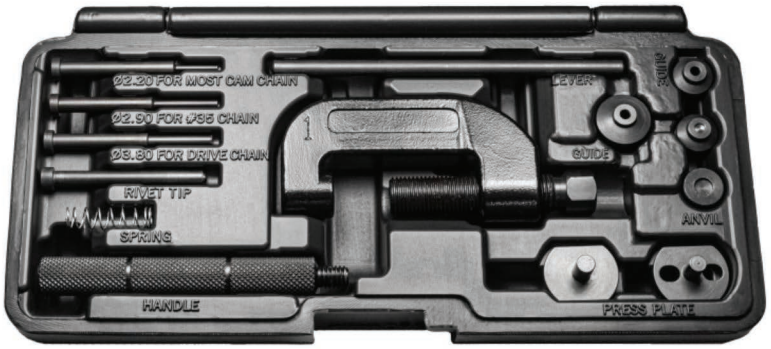

B. *CHAIN BREAKER*

97-23

This Chain Breaker is equipped with two hardened pins in 4.0mm. It covers the gamut from 420 to 620 chains. The handle can be folded away for easy storage.

B NEW!



C. *MASTER LINK PLIERS*

97-24

Many chains use a “master link” that allows the chain to be replaced by hand, over time, wear, dirt and corrosion can make it difficult to separate by hand.

Master Link Pliers can solve the problem and make removal and replacement of these master links quick and effortless. Insert the jaws into the master link and squeeze the handles until link is separated.

Note: Inquire chain manufacturer for recommendations on reuse or replacement of masterlinlk. Squeeze side plates of link between fingers throughout the removal process to prevent damage to “power link” master links on chains.

C NEW!



C. *ATV CLUTCH SPIDER NUT DRIVERS*

97-500 ATV Clutch spider nut driver P85/P90
97-501 ATV Clutch spider nut driver P95/P90

C



NEW!



Hardware Nuts & Bolts Show Chrome



NUTS, BOLTS, FASTENERS & MISCELLANEOUS ITEMS

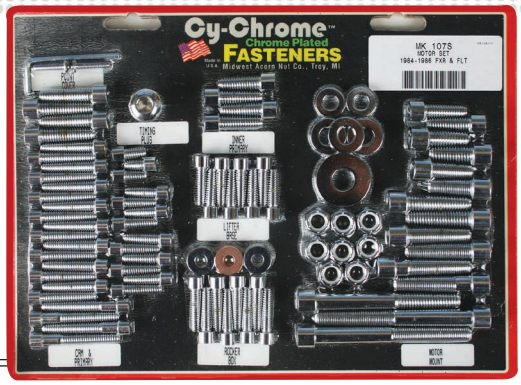

MOTOR SETS — SMOOTH ALLEN HEADS

Knurls have been removed by centerless grinding process. This ensures head purchase contact area is not compromised.

NOTE: If the kits do not contain allen heads or if they are hidden in the application they will not be smooth.

PART NO.	YEAR	MODEL	DESCRIPTION
SPORTSTER®			
40-16	1986/1990	XL Evolution®	Allen head screws for cam, primary, rocker box, lifter base, top motor mount, oil filter mount and point cover.

SMOOTH ALLEN KITS FOR SPORTSTER®

Knurls have been removed by centerless grinding process. This ensures head purchase contact area is not compromised. **NOTE:** If the kits do not contain allen heads or if they are hidden in the application they will not be smooth.

PART NO.	YEAR	MODEL	DESCRIPTION
40-105	1991/1993	XL	Cam cover set. Allen head screws.
40-587	1991 & Later	XL	Cam & sprocket cover set. Allen head screws.
40-31	1977/1983	XL	Disc brake caliper mount for front dual disc. Allen head screws.
40-111	1979/1991	XLS	Disc brake rotor to hub. Rear. Spoke or cast wheel. Flat head screws.
40-40	1977/1983	XL	Disc brake to rotor hub. Dual front. Spoke wheel. Flat head screws.
40-593	1986 & Later	XL	Gas tank mount kit. Allen head screws.
40-44	1982/1991	All Models	Handlebar lever mount and master cylinder cover. Button head screws.
40-45	1973/1981	All Models	Handlebar lever mount and master cylinder cover. Allen head screws.
40-51	1976 & Earlier	All Models	Kicker arm set. Upper and lower. Allen head screws.
40-54		All Models	License plate mounting kit. Button head screws.
40-114	1991/1993	XL	Motor mount. Lower front. Allen head screws.
40-115	1991/1993	XL	Motor mount. Front upper & top center. Allen head screws.
40-117	1957/1976	XL	Rocker box bolt set. Acorn nut and stud.
40-119	1971/1976	XL	Rocker box set. Allen head screws.
40-126	1991/1993	XL	Sprocket cover and rear master cylinder mount. Allen head screws.
40-97		All XL except 39mm tubes	Triple tree pinch bolts. Allen head screws.

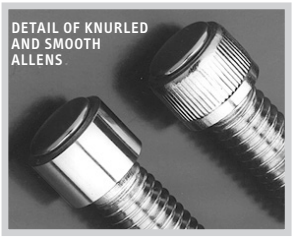

SMOOTH ALLEN KITS FOR BIG TWIN

Knurls have been removed by centerless grinding process. This ensures head purchase contact area is not compromised. **NOTE:** If the kits do not contain allen heads or if they are hidden in the application they will not be smooth.

PART NO.	YEAR	MODEL	DESCRIPTION
40-586	1999 / Up	Twin Cam	Cam cover. Smooth allen head screws w/ washers.
40-589	1999 / Up	Twin Cam	Cam cover. Knurled allen head screws w/ washers.
40-27	1973/1985	Big Twin	Chain sprocket to hub mount with cast rear wheel. Allen head screws
40-28	1973/1985	Big Twin	Chain sprocket to hub mount with spoke rear wheel. Allen head screws.
40-30	1936/1964	Big Twin	Derby and chain inspection cover. Flat head screws.
40-31	1977/1983	FX	Disc brake caliper mount for front dual disc. Allen head screws.
40-36	1984/1992	FXST & FXWG	Disc brake rotor to hub. Front single. Spoke wheel. Button head screws.
40-38	1982/1985 1980 & 1981	FLT FLT (Right side front)	Disc brake rotor to hub. Rear. Cast wheel. Flat head screws.
40-40	1977/1983 1982 & 1983	FX FXR	Disc brake rotor to hub. Dual front. Spoke wheel. Flat head screws.
40-591	All models	FXST	Fender rail kit. Allen head screws, flat washers.
40-44	1982/1992	All Models	Handlebar lever mount and master cylinder cover. Button head screws.
40-45	1973/1981	All Models	Handlebar lever mount and master cylinder cover. Allen head screws.
40-47	1948/1977	Big Twin	Head bolt set. Acorn nut and stud.
40-594	1990 & Later	Big Twin	Intake manifold kit. Allen head screws.
40-51	1976 & Earlier	All H-D® models	Kicker arm set. Upper and lower. Allen head screws.
40-54		All Models	License plate mounting kit. Button head screws.
40-56	1936/E. 1976	Big Twin	Lifter base bolt set. Oval head screws.
40-57	L.1976/1992	Big Twin	Lifter base set. Acorn nut and stud.
40-92	1936/1986	Big Twin	Transmission side cover set. Acorn nut style.
40-600	1998	FLHR & FLTR	Transmission side cover set. Allen head screws.
40-602	1999 / 2001	TC 88 Dyna®	Transmission side cover set. Smooth allen head screws.
40-601	1999 / 2001	TC 88 Dyna®	Transmission top cover set. Smooth allen head screws.
40-97		All FX except 39mm tubes	Triple tree pinch bolt Set. Allen head screws.



A

A. *SHOW CHROME ACORN NUTS*

Assortment tray of show chrome acorn nuts. 10 - 24 thru 1/2 - 20. 12 Sizes; 110 pieces.

40-134 Assortment tray. SOLD EACH

REFILL POLYBAGS

Sold as 10 piece bag or 5 piece bag.

40-135	10-24.	BAG OF 10	**40-141**	3/8-16.	BAG OF 10
40-136	10-32.	BAG OF 10	**40-142**	3/8-24.	BAG OF 10
40-137	1/4-20.	BAG OF 10	**40-143**	7/16-14.	BAG OF 10
40-138	1/4-28.	BAG OF 10	**40-144**	7/16-20.	BAG OF 10
40-139	5/16-18.	BAG OF 10	**40-145**	1/2-13.	BAG OF 5
40-140	5/16-24.	BAG OF 10	**40-146**	1/2-20.	BAG OF 5



B

B. *BUTTON HEAD SCREWS*

Assortment tray of chrome plated button head screws. #8 - 3/8 UNC & UNF. 24 Sizes; 240 pieces. Grade 8.

40-291 Assortment tray. SOLD EACH

REFILL POLYBAGS SOLD AS BAG OF 10

40-292	8 - 32 x 1/2.	**40-304**	1/4 - 28 x 3/4.
40-293	8 - 32 x 5/8.	**40-305**	1/4 - 28 x 1.
40-294	8 - 32 x 3/4.	**40-306**	5/16 - 18 x 1/2.
40-295	10 - 24 x 1/2.	**40-307**	5/16 - 18 x 3/4.
40-296	10 - 32 x 1/2.	**40-308**	5/16 - 18 x 1.
40-297	10 - 32 x 3/4.	**40-309**	5/16 - 24 x 3/8.
40-298	10 - 32 x 1.	**40-310**	5/16 - 24 x 1/2.
40-299	1/4 - 20 x 5/8.	**40-311**	5/16 - 24 x 1.
40-300	1/4 - 20 x 3/4.	**40-312**	3/8 - 16 x 3/4.
40-301	1/4 - 20 x 7/8.	**40-313**	3/8 - 16 x 1.
40-302	1/4 - 20 x 1.	**40-314**	3/8 - 24 x 3/4.
40-303	1/4 - 28 x 1/2.	**40-315**	3/8 - 24 x 1.



C

C. *SMOOTH ALLEN HEAD SCREWS*

Assortment trays of chrome plated allen head screws. 1/4, 5/16 & 3/8. 24 Sizes; 215 pieces. Grade 8.

40-197 Assortment tray. Coarse thread. SOLD EACH
40-222 Assortment tray. Fine thread.

Assortment trays of chrome plated allen head screws. 8 - 32, 10 - 24, 10 - 32. 18 Sizes; 180 pieces. Grade 8.

40-247 Assortment tray. SOLD EACH

REFILL POLYBAGS

SOLD AS BAG OF 10.

40-248	8 - 32 x 1/2.
40-249	8 - 32 x 7/8.
40-250	10 - 24 x 3/8.
40-251	10 - 24 x 1/2.
40-252	10 - 24 x 5/8.
40-253	10 - 24 x 3/4.
40-254	10 - 24 x 1.
40-255	10 - 24 x 1-1/4.
40-256	10 - 24 x 1-1/2.
40-257	10 - 24 x 1-3/4.
40-258	10 - 24 x 2.
40-259	10 - 32 x 1/2.
40-260	10 - 32 x 5/8.
40-261	10 - 32 x 3/4.
40-262	10 - 32 x 7/8.
40-263	10 - 32 x 1.
40-264	10 - 32 x 1-1/4.
40-265	10 - 32 x 1-1/2.

SOLD AS BAG OF 10.

COARSE PART NO.	SIZE	FINE PART NO.
40-198	1/4 x 5/8	**40-223**
40-199	1/4 x 3/4	**40-224**
40-200	1/4 x 7/8	**40-225**
40-201	1/4 x 1	**40-226**
40-202	1/4 x 1-1/4	**40-227**
40-203	1/4 x 1-1/2	**40-228**
40-204	1/4 x 1-3/4	**40-229**
40-205	1/4 x 2	**40-230**
40-206	1/4 x 2-1/4	**40-231**
40-207	5/16 x 5/8	**40-232**
40-208	5/16 x 3/4	**40-233**
40-209	5/16 x 7/8	**40-234**

SOLD AS BAG OF 10.

COARSE PART NO.	SIZE	FINE PART NO.
40-210	5/16 x 1	**40-235**
40-211	5/16 x 1-1/4	**40-236**
40-212	5/16 x 1-1/2	**40-237**
40-213	5/16 x 1-3/4	**40-238**
40-214	5/16 x 2	**40-239**
40-215	5/16 x 2-1/4	**40-240**
40-216	3/8 x 3/4	**40-241**
40-217	3/8 x 1	**40-242**
40-218	3/8 x 1-1/4	**40-243**
40-219	3/8 x 1-1/2	**40-244**
40-220	3/8 x 1-3/4	**40-245**
40-221	3/8 x 2	**40-246**

A. *GARDNER-WESTCOTT SPECIALITY WASHER KIT FOR H-D®*

This specialty washer kit from Gardner-Westcott has many applications that will save your customers and service department a lot of time searching for that special application washer. Consisting of 24 different parts totaling 590 pieces ranging from copper washers, stainless steel washers with neoprene seal, nylon washers for various drain and filler plug applications and many more.

24-100 Speciality washer kit for H-D® applications. **SOLD EACH**

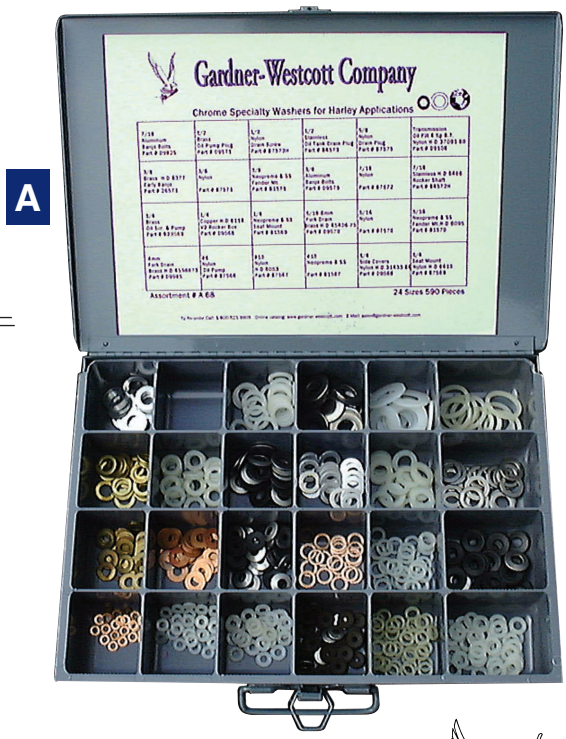

PART NO	SIZE	DESCRIPTION	OEM NO.
24-101	7/16"	Aluminum banjo bolt washer.	
24-102	1/2"	Brass oil pump plug.	
24-103	1/2"	Nylon drain plug washer.	
24-104	1/2"	Stainless steel oil tank drain plug washer.	
24-105	5/8"	Nylon drain plug washer.	
24-106		Nylon oil filler plug for Big Twin 4 speed.	37091-80
24-107	3/8"	Brass banjo bolt, early.	6377
24-108	3/8"	Nylon washer.	
24-109	3/8"	Neoprene & stainless steel fender washer.	
24-110	3/8"	Aluminum banjo bolt, late.	
24-111	7/16"	Nylon washer.	
24-112	7/16"	Stainless steel rocker shaft washers.	6466
24-113	1/4"	Brass washer for oil screen & pump.	
78-443	1/4"	Copper V2 rocker box cover washer.	6114
24-115	1/4"	Neoprene & stainless steel seat mount washer.	
24-116	8mm	Brass fork drain screw washer.	45406-75
24-117	5/16"	Nylon washer.	
24-119	5/16"	Neoprene & stainless steel fender washer.	6095
24-120	4mm	Brass fork drain screw washer.	45986-73
24-121	#8	Nylon oil pump washer.	
24-122	#10	Nylon washer.	6053
24-123	#10	neoprene & stainless steel washer.	
95-761	1/4"	Nylon side cover washer.	31433-84
24-1	1/4"	Nylon seat mount washer.	6410

SOLD AS BAG OF 10

B. *SHOW CHROME PLUGS FOR ALLENS*

Assortment tray of show chrome plugs for allen head screws. The kit consists of 100 pieces each for 1/4, 5/16 and 3/8. The kit also comes with 3 sample bolts with a hole plug applied for demonstration purposes. 100% metal, made in the **U.S.A. Note:** Plugs also fit corresponding metric bolts.

40-127 Assortment tray. **SOLD EACH**



REFILL POLYBAGS

SOLD AS 50 PIECE BAG OR 10 PIECE BLISTER PACK.

50 PIECE BAG PART NO.	SIZE	10 PIECE PACK PART NO.
40-128	1/4	**40-131**
40-129	5/16	**40-132**
40-130	3/8	**40-133**

A



A. *HEX NUTS, LOCK & FLAT WASHERS*

Assortment tray of chrome plated SAE flat and lock washers, and hex nuts in UNC & UNF threads. 1200 Pieces.

40-266 Assortment tray. SOLD EACH

REFILL POLYBAGS

SOLD AS BAG OF 100.

40-267	1/4 - 28	Hex nut.	**40-273**	1/4	Lockwasher.
40-268	5/16 - 24	Hex nut.	**40-274**	5/16	Lockwasher.
40-269	3/8 - 24	Hex nut.	**40-275**	3/8	Lockwasher.
40-270	1/4 - 20	Hex nut.	**40-276**	1/4	Flat washer.
40-271	5/16 - 18	Hex nut.	**40-277**	5/16	Flat washer.
40-272	3/8 - 16	Hex nut.	**40-278**	3/8	Flat washer.

B



B. *NYLON INSERT HEX NUTS*

Assortment tray of chrome plated nylon insert hex nuts. UNC & UNF. 11 Sizes; 105 pieces.

40-279 Assortment tray. SOLD EACH

REFILL POLYBAGS

SOLD AS BAG OF 10 OR BAG OF 5.

40-280	10 - 24.	**BAG OF 10**	**40-286**	3/8 - 16.	**BAG OF 10**
40-281	10 - 32.	**BAG OF 10**	**40-287**	3/8 - 24.	**BAG OF 10**
40-282	1/4 - 20.	**BAG OF 10**	**40-288**	7/16 - 14.	**BAG OF 10**
40-283	1/4 - 28.	**BAG OF 10**	**40-289**	7/16 - 20.	**BAG OF 10**
40-284	5/16 - 18.	**BAG OF 10**	**40-290**	5/8 - 18.	**BAG OF 5**
40-285	5/16 - 24.	**BAG OF 10**			

C



C. *HEX HEAD CAP SCREWS*

Assortment trays of show chrome hex head cap screws. 1/4, 5/16 & 3/8. 24 Sizes; 215 pieces. Grade 5.

40-147 Assortment tray. Coarse thread. SOLD EACH

REFILL POLYBAGS

SOLD AS BAG OF 10.

COARSE PART NO.	SIZE	FINE PART NO.
40-148	1/4 x 5/8	**40-173**
40-149	1/4 x 3/4	**40-174**
40-150	1/4 x 7/8	**40-175**
40-151	1/4 x 1	**40-176**
40-152	1/4 x 1-1/4	**40-177**
40-153	1/4 x 1-1/2	**40-178**
40-154	1/4 x 1-3/4	**40-179**
40-155	1/4 x 2	**40-180**
40-156	1/4 x 2-1/4	**40-181**
40-157	5/16 x 5/8	**40-182**
40-158	5/16 x 3/4	**40-183**
40-159	5/16 x 7/8	**40-184**
40-160	5/16 x 1	**40-185**
40-161	5/16 x 1-1/4	**40-186**
40-162	5/16 x 1-1/2	**40-187**
40-163	5/16 x 1-3/4	**40-188**
40-164	5/16 x 2	**40-189**
40-165	5/16 x 2-1/4	**40-190**
40-166	3/8 x 3/4	**40-191**
40-167	3/8 x 1	**40-192**
40-168	3/8 x 1-1/4	**40-193**
40-169	3/8 x 1-1/2	**40-194**
40-170	3/8 x 1-3/4	**40-195**
40-171	3/8 x 2	**40-196**

A. CHROME SPACERS

SOLD AS BAG OF 5.

PART NO.	SIZE	PART NO.	SIZE
40-801	1/4" I.D. x 1/8" long	**40-810**	5/16" I.D. x 1/2" long
40-802	1/4" I.D. x 1/4" long	**40-811**	5/16" I.D. x 3/4" long
40-803	1/4" I.D. x 3/8" long	**40-812**	5/16" I.D. x 1" long
40-804	1/4" I.D. x 1/2" long	**40-813**	3/8" I.D. x 1/8" long
40-805	1/4" I.D. x 3/4" long	**40-814**	3/8" I.D. x 1/4" long
40-806	1/4" I.D. x 1" long	**40-815**	3/8" I.D. x 3/8" long
40-807	5/16" I.D. x 1/8" long	**40-816**	3/8" I.D. x 1/2" long
40-808	5/16" I.D. x 1/4" long	**40-817**	3/8" I.D. x 3/4" long
40-809	5/16" I.D. x 3/8" long	**40-818**	3/8" I.D. x 1" long


40-804


40-812


40-815

CHROME HORSE® HARDWARE USA MADE

B. CHROME HORSE® STAINLESS STEEL ALLEN HEAD SCREWS

U.S.A. MADE stainless steel.
SOLD AS BAG OF 10.

SIZE	FINE PART NO.
1/4 x 5/8	**40-401**
1/4 x 7/8	**40-403**
1/4 x 1-1/2	**40-406**
1/4 x 1-3/4	**40-407**
1/4 x 2	**40-408**
1/4 x 2-1/4	**40-409**
5/16 x 1-3/4	**40-416**

C. CHROME HORSE® STAINLESS STEEL HEX HEAD SCREWS

SOLD AS BAG OF 10.

COARSE PART NO.	SIZE	FINE PART NO.	COARSE PART NO.	SIZE	FINE PART NO.
—	1/4 x 5/8	**40-353**	—	5/16 x 5/8	**40-362**
—	1/4 x 3/4	**40-354**	—	5/16 x 3/4	**40-363**
—	1/4 x 7/8	**40-355**	—	5/16 x 7/8	**40-364**
—	1/4 x 1-1/4	**40-357**	—	3/8 x 3/4	**40-371**
—	1/4 x 1-1/2	**40-358**	—	3/8 x 1	**40-372**
40-335	1/4 x 1-3/4	**40-359**	—	3/8 x 1-1/4	**40-373**
—	1/4 x 2	**40-360**	—	3/8 x 1-1/2	**40-374**
40-337	1/4 x 2-1/4	**40-361**	**40-351**	3/8 x 1-3/4	**40-375**
			40-352	3/8 x 2	**40-376**

D. CHROME HORSE® STAINLESS STEEL HEX NUTS

U.S.A. MADE stainless steel hex nuts in UNF threads.

40-429	1/4 - 28	Hex nut, UNF.	**PKG. OF 100**
40-434	7/16 - 20	Hex nut, UNF.	**PKG. OF 5**

E. CHROME PLATED FLATWASHERS

PART NO.	DIA.	QTY. PER PKG.
41-540	1/4"	12
41-541	5/16"	12
41-542	3/8"	6
41-543	7/16"	6

SOLD AS KIT

F. COLONY PIKE NUTS

PART NO.	DIA.	QTY. PER PKG.
40-711	1/4"-24 H.D.	5
40-713	1/4"-28 SAE	5
40-714	5/16"-24 SAE	4
40-715	3/8"-24 SAE	3
40-716	7/16"-20 SAE	2
40-717	1/2"-20 SAE	1
40-718	9/16"-18 SAE	1
40-722	1/4"-20 UNC	5
40-723	5/16"-18 UNC	4
40-724	3/8"-16 UNC	3
40-726	1/2"-13 UNC	1
40-728	5/8"-11 UNC 1"	1
40-729	5/8"-11 UNC 1-1/4"	1

SOLD AS KIT

G. COUNTERSUNK WASHERS

PART NO.	DIA.	QTY/ PER PKG.
41-133	1/4"	8
41-134	5/16"	8
41-135	3/8"	5

SOLD AS KIT



E



F



G



A





A. *CHROME PLATED ACORN NUTS & CAP NUTS*

No mix-ups — display skin packaged with labeling of thread size & stock number.

ACORN	THREAD SIZE	QTY. PER PKG.	CAP
41-500	1/4-24 H-D®	5	—
41-501	1/4-28 SAE	5	**41-521**
41-502	5/16-24 SAE	4	—
41-503	3/8-24 SAE	3	—
41-504	7/16-20 SAE	2	**41-524**
41-505	1/2-20 SAE	1	**41-525**
41-506	9/16-18 SAE	1	**41-526**
41-507	5/8-18 SAE	1	**41-527**
41-508	1/4-20 UNC	5	—
41-509	5/16-18 UNC	4	—
41-510	3/8-16 UNC	3	—
41-511	7/16-14 UNC	2	**41-531**
41-512	1/2-13 UNC	1	**41-532**
41-513	9/16-12 UNC	1	**41-533**
41-514	5/8-11 UNC	1	**41-534**

B



41-855



41-979



98-299



98-490

41-859



ALL TIMING PLUGS CHROME PLATED

COLONY

C



41-983

D



41-166



41-162

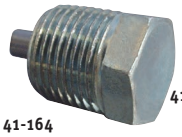

41-164

41-165





41-167



41-163

B. *TIMING PLUGS*

Acorn style plug fits all models H-D® Big Twin & Sportster® timing plug holes and oil tanks with 5/8 - 18 drain holes.

41-855 Acorn style; chrome plated. SOLD EACH

Acorn style plug with an oversize thread and one tap for rethreading the stripped out timing hole. Fits all H-D® timing holes.

41-859 Oversize chrome plated acorn plug only SOLD EACH

Quality reproduction of stock timing plug for FL & XL 1952 thru 1969. Replaces OEM 704.

98-299 Reproduction style; chrome plated. SOLD EACH

Exact duplicate of OEM 2326-26. Fits timing plug on Big Twin 1936 thru 1939 and Sportster® timing plug holes and oil tanks with 5/8 - 18 drain holes. Oil fill on 45" models 1940 & earlier.

41-979 Functional, custom design style. SOLD EACH

Chrome plated duplicate of allen style plug used on all models H-D® 1970 & later. Replaces OEM 720.

98-490 Allen timing plug; chrome plated. SOLD EACH

C. *DRAIN PLUGS*

Quality reproduction of drain plug and brass gasket used on Sportster® transmission, motor case, oil tank, and Big Twin 1937 thru 1986 transmission. 1/2 - 13 thread. SOLD EACH

41-983 Cad plated plug. OEM 707.

41-25 Washer only. OEM 62702-52.

This plug fits all H-D® oil tank drain holes with 5/8 - 18 hole. Also transmission oil fill on 45" models 1940 & earlier.

41-979 Chrome plated plug. SOLD EACH

D. *MAGNETIC DRAIN PLUGS*

Magnetic drain plugs have been proven to add to the life of your engine and transmission by removing metal particles from the oil. Cheap insurance! Cad plated.

41-162 Replaces OEM 707. 1/2 - 13 Drain plugs are. used on 1941 thru 1986 Big Twin 4 speed and 1954 thru 1976 Sportster® engine case and stock oil tank. SOLD EACH

41-163 Replaces OEM 734. 1/8 - 27 NPT hex head. Used for various aftermarket oil tank drain plugs and 1987 thru 1989 Big Twin inner primary.

41-164 Replaces OEM 722. 3/8 - 18 Plug used on FXR & FLT 5 speed transmission.

41-165 Replaces OEM 60348-65A, B. 1/2 - 20 Plug is used on 1979 & later XL engine, 1991 & later Dyna® & FLT transmission drain plug, 1965 thru 1984 Big Twin inner primary, and 1981 thru 1989 Big Twin OEM oil tank.

41-166 Replaces OEM 718. 1/4 - 18 Plug is used on 1980 thru 1984 FXR & FLT outer primary covers.

41-167 Replaces OEM 739A. 1/8 - 27 NPT internal hex head. Used on 1985 & later Big Twin outer primary and trap door.

CUSTOM CHROME PLATED HEX HEAD OIL PUMP PLUGS FOR BIG TWIN 1936 & LATER

41-886	Tappet oil screen plug, 1970 thru 1980. OEM 657.	SOLD EACH
41-888	Tappet oil screen, oil pump check valve, relief valve plug 1981 & later. OEM 26263-80.	
41-889	Tappet oil screen, 1952 thru 1965. OEM 24987-52.	CHROME PLATED
41-890	Tappet oil screen plug, 1966 thru 1969. OEM 655.	
41-891	Complete set of 3 plugs: tappet oil screen, oil pump check valve, and relief valve plug, 1970 thru 1980.	SOLD AS SET
41-892	Complete set of 3 plugs: tappet oil screen, oil pump check valve, and relief valve plug, 1981 & later. OEM 26263-80.	



CHROME ALLEN SCREW & NUT KITS FOR SPORTSTER®

COLONY

PART NO.	APPLICATION
41-751	Disc brake rotor bolt & nut kit for Sportster® (front) 1973.
41-752	Disc brake rotor-to-hub screw kit for Sportster® 1974 thru 1977.
41-753	Disc brake rotor-to-hub screw kit for Sportster® 1978 thru 1982.
41-792	Disc rear brake rotor-to-hub screw & nut kit for XL & FX, 1979 & later, and FL (spoke or cast) 1981 thru 1984.
41-754	Disc front brake rotor-to-hub screw kit for Sportster® 1984 & later.
41-757	Fork bracket cover screw kit for Sportster® 1952 & later.
41-796	Oil pump mounting kit for Sportster® 1977 thru 1990.
41-774	Point cover screws for all H-D® 1979 & later.
41-800	Rocker box screw kit for Sportster® 1977 thru 1985.
41-937	Rocker cover screw kit for XL 1986 & later.
41-779	Rocker shaft end plug & cap nut kit for Sportster® 1971 thru 1984.
41-802	Sprocket cover screw kit for Sportster® 1977 thru 1985.

ACORN NUT KITS — CAP NUT KITS FOR H-D® SPORTSTER®

ACORN	APPLICATION	CAP
41-598	Air cleaner screws for Sportster® & 74" pre-1978 with stock air cleaner.	**41-700**
41-545	Axle kit (rear) for Sportster® 1979 & later.	—
—	Cam cover screw kit for Sportster® 1971 thru 1985.	**41-701**
41-921	Cam cover screw kit for XL 883cc & 1100cc, 1986 & later.	—
—	Cylinder base nut kit for XLR style Sportster® 1957 thru 1985.	—
41-553	Handlebar clamp & gauge mount kit for Sportster® 1983 & later.	—
41-554	Handlebar clamp mount kit for Sportster® 1974 & later.	—
41-906	Head bolt covers for all Evolution® 1985 thru 1992.	**41-908**
—	Head bolt kit for Sportster® 1973 thru 1985.	—
—	License plate mounting kit.	**41-706**
41-610	Lifter base screw kit for Sportster® 1957 thru 1985.	—
41-923	Lifter base screw kit for XL 883cc & 1100cc, 1986 thru 1990.	—
—	Oil filter adapter screw kit for XL 883cc & 1100cc, 1986 thru 1990.	—
41-615	Primary cover screw kit for XLH 1967 thru 1970 and XLCH 1970.	—
—	Primary cover screw kit for Sportster® 1971 thru 1976.	**41-708**
41-927	Primary cover screw kit for XL 883cc & 1100cc, 1986 thru 1990.	—
41-618	Rocker box screw kit for Sportster® 1957 thru 1976.	—
41-587	Rocker shaft nut & washer kit for Sportster® 1957 thru 1985.	**41-418**
41-620	Sprocket cover screw kit for Sportster® 1957 thru 1970.	—
—	Sprocket cover screw kit for Sportster® 1971 thru 1976.	**41-713**
41-622	Sprocket cover screw & nut kit for Sportster® 1977 thru 1985.	—
41-929	Sprocket cover/master cylinder mounting kit for XL 883cc & 1100cc, 1986 & later.	—
41-588	Switch housing screws for Sportster® 1973 thru 1981.	—
41-623	Tachometer drive block-off plug for Sportster® 1957 thru 1984.	—



















ACORN NUT KITS — CAP NUT KITS FOR KNUCKLE, PAN, SHOVEL, EVOLUTION® & TC88™

ACORN	APPLICATION	CAP
41-545	Axle kit (rear) for Big Twins 1973 & later.	—
41-546	Circuit breaker screw kit for Big Twins 1936 thru 1957.	—
41-547	Cylinder base nut kit for Big Twins 1936 thru 1977.	—
41-548	Cylinder base nut kit for Shovel 1978 thru 1984.	—
41-549	Dash mounting kit for FXS.	—
41-551	Generator screw kit for Big Twins 1936 thru 1957.	—
41-553	Handlebar clamp & gauge mount kit for FX 1983 & later.	—
41-554	Handlebar clamp mount kit for FX 1974 & later.	—
41-906	Head bolt covers for all Evolution® 1985 thru 1992.	**41-908**
41-560	Kickstand mounting kit for Big Twins 1936 & later.	—
41-349	Knuckle nuts for Knucklehead 1936 thru 1947.	—
—	Lifter base screw kit for O.H.V. Big Twins 1936 thru 1975.	—
—	Lifter base screw kit for Big Twins 1976 & later.	—
41-152	Lifter base hardware for Twin Cam 88™ 1999 & later.	—
41-563	Late lifter bases to early case conversion kit.	—
41-564	Motor case stud & nut kit for Flathead 1936 thru 1939.	—
41-565	Motor case stud & nut kit for Flathead 1940 thru 1948.	—
41-566	Motor case stud & nut kit for Knucklehead 1936 thru 1939.	—
—	Motor case stud & nut kit for Shovel 1970 thru 1978.	—
41-571	Motor case stud & nut kit for Shovel & Evolution®, 1979 thru 1995.	—
41-159	Motor case stud & nut kit for Twin Cam 88™ Dyna®, FLT & Softail®	—
41-575	Oil pump screw kit for Big Twins 1968 thru 1977.	—
41-576	Oil pump screw kit for Big Twins 1978 thru 1991.	—
41-155	Oil hose cover screw kit for Twin Cam 88™ 1999 & later.	—
41-581	Primary cover screw kit for all Big Twin 5 speed 1980 thru 1984.	**41-684**
—	Primary cover screw kit for Big Twin 5 speed 1985 & later (except 1989 FXST.)	**41-915**
41-582	Rocker arm cover screw kit for all Pan.	—
—	Rocker box bolt kit for Knucklehead 1936 thru 1947.	**41-686**
41-584	Rocker box nut kit for Shovel 1966 thru 1984.	—
41-587	Rocker shaft nut & washer kit for Shovel 1966 thru 1984.	**41-418**
41-588	Switch housing screw kit for Big Twins 1973 & later.	—
41-592	Transmission filler cap/dipstick for FLT & 5 speed 1985 & 1986.	—
41-594	Transmission screw & nut kit for FLT 1980 thru 1985 and 5 speed.	**41-691**
—	Transmission side cover nut kit for Big Twin 1936 thru 1984 4 speed.	**41-692**
41-596	Transmission side cover nut kit for all Big Twin 4 speed 1936 thru 1984. Shovel & Evolution® 4 speed use on long studs.	—
—	Transmission shifter cover screw kit for FL & FX, Evolution® 1987.	**41-919**
41-913	Transmission shifter cover screw kit for FL & FX, Evolution® 1988 & later.	—
41-156	Transmission shifter cover screws for FLT/ST.	

CHROME ALLEN SCREW & NUT KITS FOR KNUCKLE, PAN, SHOVEL, EVOLUTION® & TC88™

COLONY

PART NO.	APPLICATION
41-751	Disc brake rotor bolt & nut kit for FL (rear) 1973 thru 1980, and FL (front) 1973 & 1974, and FX 1973.
40-320	Thin hex head disc brake rotor bolt & nut kit for FL (rear) 1973 thru 1980,FL (front) 1973 & 1974, and FX 1973.
41-752	Disc brake rotor-to-hub screw kit for FX 1974 thru 1977.
41-753	Disc brake rotor-to-hub screw kit for FX 1978 thru 1982.
41-754	Disc front brake rotor-to-hub screw kit for FX, FXR & FLT, 1984 & later.
41-755	Disc rear brake rotor-to-hub screw & nut kit for FX, FXR & FLT, 1981 & 1982. Will only work with cast wheel.
41-756	Disc front brake rotor-to-hub screw & nut kit for FXST & FXWG, 1984 & later.
41-897	Disc front brake rotor to hub screw & nut kit for FXWG 1978 thru 1983.
41-898	Sprocket bolt & nut kit for FL, FX & XL, with chain drive and spoke rear wheel, 1973 & later
41-899	Sprocket bolt & washer kit for FL & FX, 1973 & later, XL 1973 thru 1991, with cast rear wheel, including belt drive.
41-900	Sprocket bolt & nut kit fits FXWG & FXRS, with belt drive & spoke rear wheel, 1985 & later.
41-901	Disc brake rotor to hub kit for front or rear cast wheel FLT 1982 thru 1985.
41-757	Fork bracket cover screw kit for FX 1971 & later.
41-766	Head bolt & washer 12 point big bore kit for Pan & Shovel, 1948 & later.
41-767	Lifter base screw kit for Big Twin 1936 thru 1976.
41-768	Lifter base screw kit for Big Twin 1976 & later.
41-150	Motor mount (front) hardware for Dyna®, 1991 & later.
41-770	Oil pump mounting kit for OHV Big Twin 1936 thru 1967.
41-772	Oil pump mounting kit for Shovel & Evolution®, 1978 thru 1991.
41-774	Point cover screws for all H-D® 1979 thru 1992.
41-131	Point cover screws for Big Twin, 1993 & later.
41-775	Primary cover screw kit for Big Twin 1936 thru 1964.
41-776	Primary cover screw kit for Shovel & Evolution® 4 speed, 1971 & later.
41-935	Primary cover screw kit for FXR & FLT 5 speed, 1985 & later.
41-936	Primary cover screw kit for Softail® 1989 & later and Dyna Glide® 1991 & later.
41-937	Rocker cover screw kit for FX & FL 1985 & later.
41-779	Rocker shaft end plug & cap nut kit for Shovel 1971 & later.
41-780	Timing cover screw kit for Big Twin 1936 thru 1970.
41-781	Timing cover screw kit for Shovel & Evolution®, 1971 thru 1992.
41-131	Timing cover screw kit for Big Twin V2, 1993 & later.
98-490	Timing plug allen. Chrome plated duplicate replaces OEM 720.
41-149	Transmission-to-motor mounting hardware for Twin Cam 88™, 1999 & later.
41-782	Transmission side cover screw kit for Big Twin 4 speed, 1936 thru 1984.
41-939	Transmission side cover screw kit for FX & FL 1987 & later, Softail® and Dyna® 1991 & later.
41-695	Transmission top cover screw kit for Big Twin 1936 thru 1964. Cad plated - stock.
41-784	Transmission top cover screw kit for Big Twin 1965 thru 1979.

CHROME ALLEN SCREW & NUT KITS FOR KNUCKLE, PAN, SHOVEL, EVOLUTION® & TC88™ CONTINUED ON NEXT PAGE

ACORN NUT SETS

Neatly packaged acorn nuts available in many popular American SAE & UNC sizes.

PART NO.	SIZE	QTY. SOLD PER CARD
41-17	10 - 32 SAE	**5 on card.**
41-16	10 - 24 UNC	**5 on card.**
41-5	1/4 - 28 SAE	**5 on card.**
41-8	1/4 - 20 UNC	**5 on card.**
41-2	5/16 - 24 SAE	**4 on card.**
41-1	5/16 - 18 UNC	**4 on card.**
41-4	3/8 - 24 SAE	**3 on card.**
41-3	3/8 - 16 UNC	**3 on card.**
41-9	7/16 - 20 SAE	**2 on card.**
41-12	7/16 - 14 UNC	**2 on card.**
41-6	1/2 - 20 SAE	**1 on card.**
41-13	1/2 - 13 UNC	**1 on card.**
41-11	5/8 - 18 SAE	**1 on card.**

CHROME PLATED



41-5



41-3



41-6

A



40-318

53-195

B



C



CHROME PLATED

D



E



41-217

F



41-415



41-219

A. *ROCKER ARM COVER NUT KITS FOR SHOVEL*

Kit includes 18 hex nuts and 18 flat washers. For 1966 thru 1983. Replaces OEM 7753 and 6016.

40-318 Colony kit. Chrome plated. SOLD AS KIT

B. *INDIVIDUAL CHROME STOCK HARDWARE KITS FOR H-D®*

These kits are manufactured to the consistent high quality standards that everyone has come to expect from Colony. No compromise has been made that would sacrifice their quality or authenticity. These kits are perfect for restorations or for motor rebuilders who prefer the stock H-D® fasteners.

PART NO.	APPLICATION
41-870	Transmission top cover screw kit for Big Twin, 1936 & later.
53-195	Generator screw kit for Big Twin, 1936 thru 1957.
53-194	Generator screw kit for Big Twin, 1958 thru 1970.
33-118	Wheel hub star cover screws, 1965 & earlier.

C. *REPLACEMENT MOTOR CASE NUT, BOLT & STUD KIT FOR H-D®*

These stock style chrome plated complete motor case kits contain all the necessary hardware to bolt together the Harley® motor cases. Each kit is packaged for the specific application; there are no universal "fits all" kits. Colony knows that a rebuild job can be only as good as the nuts & bolts that hold it together.

PART NO.	APPLICATION
41-875	Flathead 1936 thru 1939.
41-881	Big Twins 1970 thru 1978.
41-882	Big Twins 1979 thru 1995.

D. *ROCKER BOX ALLEN SCREW KITS*

91-302 For Pan with thick D-ring. For both cylinders; 24 1/4" long bolts
41-412 For Sportster® rocker box cover, 1977 thru 1985. 14 Screws.

E. *HANDLEBAR ALLEN SCREW KITS*

Handlebar bolt kit (4 screws) to fasten riser top on 74" & Sportster®, all models 1974 thru 1981. 5/16 x 18.

41-413 Chrome plated kit. SOLD AS KIT
41-217 1981 & up XL & FX. SOLD AS KIT
41-414 Light control & switch screws for H-D® 74" & Sportster®, 1972 thru 1981. SOLD AS KIT
41-218 Handlebar Switch Boxes 1996 & up. SOLD AS KIT

F. *LIFTER BASE ALLEN SCREW KIT FOR BIG TWIN*

Lifter base screws. Oval head socket.

91-348 Chrome plated, for 1936 thru 1976. SOLD AS KIT 8 PER PKG.
41-415 Chrome plated, for 1976-1/2 thru 1999.
41-219 Chrome polished smooth 1999 & up Dyna and FLT 2000 & up Softail®.
41-220 Stainless Steel Polished 1999 & up Twin Cam®

ALLEN SCREW SETS FOR HARLEY-DAVIDSON® BY GARDNER - WESCOTT

PRIMARY & CAM COVER SCREWS — BOTH SIDES

41-404	Sportster® 1971-1976.	SOLD AS SET
41-405	Sportster® 1977-1985.	
41-200	Sportster® 1986-1990.	
41-201	Sportster® 1991-2003.	
41-202	Sportster® 2004 & up.	
41-406	Big Twin 1970-1986.	
41-203	1987-1999 Softail®.	
41-204	1991-1998 Dyna®.	
41-205	1999 & up FLT.	
41-206	1999-2005 Dyna®.	
41-207	2000 & up Softail®.	
41-208	2006 & up Dyna®.	



41-404

PRIMARY COVER SCREWS

41-334	Sportster® 1971-1976.	SOLD AS SET	CHROME PLATED
41-416	Big Twin 1965-1969.		
41-333	Big Twin 1970-1985. 4 Speed.		
41-212	1989-1998 Softail® & 1999-1998 Dyna®.		
41-213	2000 & up Softail® & 1999-2005 Dyna®.		
41-214	1999 & up FLT.		
41-215	2006 & up Dyna®.		

CAM COVER SCREWS

41-332	Big Twin 1970 & later.	SOLD AS SET
41-209	1987-1999 Softail®.	
41-210	1991-1998 FXR & Dyna®.	
41-211	1999 & up FLT, Dyna® & 2000 & up Softail®.	
41-335	Sportster® XLH & XLCH, 1971 & later.	

ULTIMA® MOTOR BOLT KIT

Complete motor bolt kit for all Ultima® engines, except shovelhead.

40-619 Ultima® motor bolt kit.



41-213



41-209



41-335



41-948



41-950

POINT COVER SCREWS

41-407	Big Twin 1970 thru 1978. Sportster® XLH & XLCH, 1971 thru 1978. Set includes gasket.	SOLD AS SET
41-216	Timing Cover 1999 & up Twin Cams®.	

CARBURETOR ALLEN KITS

41-419	Keihin carb on Big Twin 1976-1988 and XL 1976-1987.	SOLD AS SET
41-946	Keihin carb on Big Twin 1990 & later and XL 1988 & later.	
41-948	For S&S® Super "B".	
41-950	For S&S® Super "E" and "G" Shorty.	

A


21-321

B


33-179


33-181

C

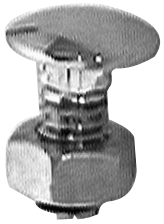
CHROME PLATED

D


CHROME PLATED

A. *CHROME OIL PRESSURE GAUGE BRACKET*

Oil pressure gauge bracket fits Big Twin Evolution® 1984 & later.

21-321 Chrome plated mount. SOLD EACH

B. *TIRE VALVE STEM COVERS*

33-179 Flared. Fits metal or rubber stems. SOLD EACH
33-181 Bullet shaped. Screws on metal stem.

C. *CARRIAGE BOLT & NUT*

Bolts and nuts.

24-118 5/16" -18 x 3/4" Long. SOLD AS PKG. OF 10

D. *SIDE COVERS FOR 2004 XL*

89-535 Right side oil tank cover. Chrome. eplaces OEM 66262-04. SOLD EACH
89-536 Left side battery cover. Chrome. Replaces OEM 66261-05.







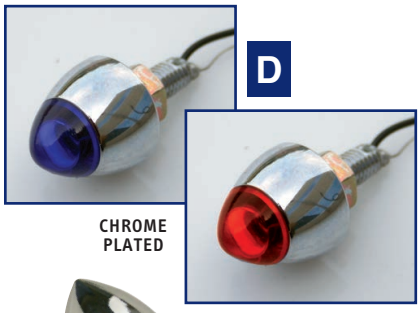





A. *IGNITION MODULE COVER FOR SPORTSTER®*

Add a little chrome to an otherwise dark area.

89-320 For Sportsters® 1982 & later. Replaces OEM 66328-82T. **SOLD EACH**

B. *SIDE COVERS FOR FXR*

89-242 Fits FXR & FXRS, 1982 & later. OEM 66351-82 & 66356-82. **SOLD AS SET**

C. *"BIG DADDY" SKULLS*

Same fine detail and bright plating as our smaller skulls. 1-1/2" High, 1" wide. With 8mm stud & nut.

41-975 Chrome with Black eyes. **SOLD EACH**

CHECK QUANTITY DISCOUNT FOR BEST PRICE

D. *"ELECTRIC" KROMETS*

"Electric" Kromets are great for license hold down bolts — gives extra light to rear of bike. They can be used any place you may normally use the standard kromets. Easy mounting with hollow mount stud for wiring. 12V.

41-971 "Electric" kromet. Red. **SOLD EACH**
41-972 "Electric" kromet. Amber.
41-973 "Electric" kromet. Blue.

E. *CHROME KROMET PACKAGE*

A decorative fastener which can be used anywhere on the bike.

41-284 Sold as package of twenty. **SOLD AS PKG**

F. *CHROME SKULL KROMET*

A decorative fastener that can be used anywhere on the bike but is best suited for license plate mounting. Comes with removable stud, nut, lock and flat washer. 1" High, 5/8" wide. 1/4-20.

41-960 Painted Black eyes. **SOLD EAC**

MIDWEST PART NUMBER / PAGE NUMBER REFERENCE

MIDWEST PART NO.	BOOK PAGE	MIDWEST PART NO.	BOOK PAGE	MIDWEST PART NO.	BOOK PAGE	MIDWEST PART NO.	BOOK PAGE	MIDWEST PART NO.	BOOK PAGE	MIDWEST PART NO.	BOOK PAGE
1-104	1.2	4-700	5.22	5-144	8.41	6-57	1.27	8-192	1.19	10-56	4.20	12-27	8.20
1-105	1.2	4-701	5.22	5-145	8.41	6-58	1.27	8-194	1.12	10-57	4.20	12-28	8.20
1-106	1.2	4-702	5.22	5-146	7.65	6-64	1.17	8-195	1.12	10-60	4.21	12-29	8.20
1-110	1.2	4-703	5.22	5-147	7.65	6-68	1.17	8-196	1.12	10-61	4.21	12-40	8.20
1-117	1.2	4-704	5.22	5-150	2.19	6-104	1.17	8-197	1.13	10-62	4.20	12-44	8.20
1-140	1.3	4-705	5.22	5-153	7.66	6-112	1.17	8-198	1.19	10-64	4.20	12-51	8.20
1-141	1.3	4-706	5.23	5-154	2.4	6-113	1.17	8-200	1.31	10-84	4.21	12-75	8.39
1-142	1.3	4-707	5.23	5-155	2.4	6-114	1.17	8-215	1.18	10-85	4.21	12-76	8.39
1-143	1.3	4-708	5.23	5-156	2.18	6-115	1.17	8-232	1.19	10-86	4.21	12-105	8.39
1-144	1.3	4-709	5.22	5-157	7.65	6-116	1.27	8-233	1.19	10-87	4.21	12-108	8.32
1-145	1.3	4-710	5.22	5-158	7.66	7-25	1.13	8-251	1.12	10-88	4.21	12-109	8.34
1-146	1.3	4-711	5.22	5-159	7.66	7-45	1.15	8-252	1.12	11-1	1.30	12-113	8.36
1-147	1.3	4-712	5.23	5-160	8.5	7-46	1.14	8-270	1.29	11-2	1.30	12-114	8.36
1-148	1.3	5-30	1.5	5-161	7.66	8-16	1.13	8-277	1.20	11-3	1.30	12-115	8.39
1-150	1.3	5-31	1.5	5-162	7.66	8-20	1.12	8-285	1.20	11-7	1.24	12-116	8.36
2-19	5.51	5-32	1.5	5-163	7.66	8-21	1.12	8-286	1.27	11-10	1.16	12-117	8.36
2-23	5.51	5-33	1.5	5-164	2.20	8-30	1.11	8-287	1.27	11-26	1.16	12-118	8.20
2-24	5.51	5-34	3.15	5-165	8.5	8-31	1.11	8-289	1.19	11-37	1.24	12-122	8.36
2-25	5.51	5-42	2.18	5-175	7.64	8-41	1.12	8-301	1.19	11-38	1.24	12-126	8.39
2-26	5.51	5-43	2.19	5-179	7.66	8-55	1.27	8-302	1.19	11-40	1.16	12-127	8.39
2-27	5.51	5-53	2.19	5-180	7.66	8-56	1.21	8-303	1.27	11-44	1.23	12-128	8.39
2-28	5.51	5-60	3.22	5-181	8.5	8-59	1.21	8-304	1.27	11-54	1.14	12-129	8.39
2-29	5.51	5-61	7.65	5-182	2.18	8-70	1.19	8-305	1.27	11-72	1.29	12-130	8.39
2-56	5.51	5-62	7.65	5-185	2.20	8-71	1.32	8-307	1.26	11-79	1.32	12-131	8.39
2-57	5.51	5-63	7.65	5-186	2.20	8-73	1.21	8-309	1.27	11-80	1.32	12-146	8.22
2-58	5.51	5-64	8.5	5-187	7.66	8-74	1.22	8-310	1.27	11-81	1.30	12-147	8.22
2-59	5.51	5-69	1.36	5-191	2.23	8-75	1.26	8-311	1.27	11-82	1.30	12-148	8.22
2-65	5.51	5-74	7.58	5-192	2.23	8-78	1.13	8-312	1.27	11-83	1.30	12-149	8.22
2-66	5.51	5-75	7.58	5-193	2.19	8-79	1.18	8-332	1.12	11-85	1.30	12-150	8.21
2-69	5.51	5-76	2.18	5-194	8.5	8-82	1.27	8-341	1.18	11-86	1.30	12-150A	8.21
2-72	5.51	5-77	7.65	5-196	2.24	8-83	1.27	8-342	1.29	11-87	1.30	12-152	8.21
2-73	5.51	5-78	2.7	5-197	2.7	8-84	1.31	8-343	1.29	11-88	1.30	12-153	8.21
3-45	9.24	5-80	8.5	5-198	2.19	8-85	1.31	8-347	1.29	11-89	1.30	12-154	8.21
3-50	9.23	5-81	5.36	5-201	7.58	8-86	1.31	8-349	1.29	11-92	1.30	12-155	8.21
3-51	9.23	5-82	7.58	5-202	7.58	8-87	1.31	8-351	1.26	11-96	1.23	12-156	8.21
3-167	9.24	5-84	2.6	5-203	7.58	8-88	1.31	8-356	1.28	11-98	1.30	12-157	8.21
3-170	9.24	5-85	1.36	5-214	2.18	8-89	1.13	8-357	1.28	11-99	1.23	12-160	8.22
4-465	5.24	5-86	9.19	5-218	2.19	8-93	1.27	8-359	1.28	11-101	1.30	12-161	8.21
4-466	5.24	5-94	2.7	5-219	3.22	8-94	1.27	8-360	1.28	11-103	1.30	12-162	8.22
4-467	5.24	5-96	9.23	5-220	1.5	8-95	1.14	8-361	1.28	11-104	1.28	12-165	8.21
4-493	5.24	5-99	2.16	5-225	2.19	8-97	1.26	8-363	1.28	11-106	1.29	12-169	8.22
4-494	5.24	5-101	2.18	5-226	2.19	8-98	1.26	8-365	1.28	11-113	1.16	12-170	8.21
4-496	5.24	5-102	2.22	5-227	2.19	8-99	1.31	8-367	1.28	11-115	1.24	12-170A	8.21
4-497	5.24	5-103	2.22	5-230	2.23	8-101	1.31	8-436	1.14	11-118	1.25	12-171A	8.21
4-570	5.24	5-104	2.22	5-232	1.34	8-102	1.27	8-437	1.12	11-119	1.25	12-171	8.21
4-571	5.24	5-105	2.22	5-233	1.34	8-103	1.27	8-438	1.14	11-122	1.24	12-173	8.22
4-572	5.24	5-106	2.22	5-234	7.66	8-104	1.27	8-439	1.14	11-124	1.23	12-177	8.36
4-573	5.24	5-107	2.22	5-235	7.65	8-105	1.27	8-479	1.14	11-125	1.23	12-181	8.39
4-574	5.24	5-108	2.22	5-237	8.6	8-106	1.27	8-480	1.14	11-126	1.23	12-191	8.39
4-650	5.22	5-109	7.58	5-238	8.6	8-115	1.26	9-7	7.89	11-127	1.23	12-201	8.39
4-651	5.22	5-111	2.22	5-239	8.6	8-118	1.26	9-10	7.89	11-128	1.23	12-205	8.37
4-652	5.22	5-112	2.22	5-240	2.20	8-119	1.26	9-11	7.89	11-129	1.23	12-206	8.37
4-653	5.22	5-113	9.19	5-245	8.5	8-122	1.27	9-55	7.89	11-131	1.19	12-207	8.37
4-654	5.22	5-115	2.22	5-246	8.5	8-123	1.27	9-58	7.89	11-139	1.23	12-208	8.37
4-655	5.22	5-116	2.22	5-251	3.22	8-125	1.26	9-60	7.89	11-143	1.19	12-209	8.37
4-656	5.22	5-117	2.7	5-261	2.7	8-126	1.36	9-63	7.88	11-144	1.23	12-212	8.32
4-657	5.22	5-118	2.6	5-262	6.79	8-131	1.20	9-65	7.89	11-147	1.16	12-213	8.32
4-660	5.22	5-119	7.64	5-286	8.40	8-132	1.18	9-73	7.89	11-148	1.16	12-214	8.37
4-661	5.22	5-122	8.42	5-287	8.40	8-136	1.18	9-74	7.88	11-150	1.23	12-231	8.39
4-662	5.23	5-123	2.18	5-288	8.40	8-137	1.13	9-81	7.89	11-201	1.14	12-240	8.33
4-663	5.23	5-124	2.18	5-289	8.40	8-138	1.14	9-82	7.89	11-301	1.20	12-241	8.33
4-664	5.23	5-128	2.24	5-290	8.40	8-139	1.13	9-85	7.88	12-12	8.20	12-242	8.33
4-665	5.23	5-129	1.5	5-301	3.22	8-144	1.26	10-2	4.20	12-13	8.20	12-247	8.27
4-666	5.23	5-130	7.65	5-302	2.4	8-145	1.13	10-3	4.21	12-14	8.20	12-251	8.36
4-667	5.22	5-132	8.5	5-303	2.4	8-146	1.13	10-4	4.21	12-15	8.20	12-260	8.39
4-668	5.23	5-133	8.5	5-307	2.4	8-147	1.14	10-7	4.21	12-16	8.20	12-261	8.39
4-669	5.23	5-134	8.5	5-308	8.40	8-150	1.31	10-9	4.21	12-17	8.20	12-266	8.33
4-670	5.23	5-135	8.5	6-3	1.17	8-151	1.13	10-10	4.21	12-18	8.20	12-281	8.33
4-671	5.23	5-136	2.23	6-4	1.17	8-152	1.13	10-11	4.21	12-19	8.20	12-282	8.33
4-672	5.23	5-137	7.58	6-5	1.17	8-185	1.18	10-14	4.21	12-20	8.20	12-305	8.39
4-673	5.23	5-138	7.58	6-6	1.17	8-186	1.18	10-15	4.21	12-21	8.20	12-306	8.39
4-674	5.23	5-139	7.58	6-7	1.17	8-188	1.29	10-26	4.19	12-23	8.20	12-361	8.21
4-675	5.23	5-140	2.23	6-9	1.17	8-189	1.29	10-27	4.19	12-24	8.20	12-383	8.39
4-676	5.22	5-142	8.41	6-10	1.17	8-190	1.29	10-30	4.35	12-25	8.20	12-384	8.39
4-677	5.23	5-143	8.41	6-54	1.13	8-191	1.21	10-35	4.20	12-26	8.20	12-572	8.37

MIDWEST PART NO.	BOOK PAGE
12-575	8.38
12-576	8.38
12-577	8.38
12-578	8.38
12-579	8.38
12-580	8.38
12-581	8.38
12-582	8.38
12-583	8.38
12-584	8.37
12-585	8.37
12-586	8.37
13-110	11.9
14-20	1.5
14-21	1.5
14-26	1.43
14-27	1.43
14-28	1.4
16-17	1.47
16-18	1.47
16-21	1.47
16-22	1.47
16-24	1.47
16-32	1.47
17-1	1.47
17-3	1.48
17-5	1.51
17-9	1.48
17-19	1.50
17-21	1.47
17-22	1.47
17-23	1.47
17-25	1.48
17-27	1.47
17-30	1.50
17-35	1.51
17-36	1.51
17-40	1.50
17-41	1.51
17-42	1.51
17-43	1.49
17-44	4.33
17-45	1.48
17-46	1.51
17-47	1.51
17-49	1.51
17-50	1.51
17-51	1.51
17-52	1.51
17-53	1.51
17-54	1.51
17-57	1.52
17-58	1.50
17-60	1.48
17-61	1.49
17-62	1.10
17-63	1.10
17-64	1.49
17-65	1.49
17-70	1.50
17-72	1.49
17-74	1.48
17-75	1.50
17-76	1.10
17-77	1.10
17-78	1.10
17-79	1.10
17-80	1.10
17-81	1.10
17-82	1.50
17-84	1.48
17-85	1.48
17-87	1.51
17-88	1.51
17-89	1.51
17-90	1.51
17-91	1.9
17-92	1.9
17-93	1.9
17-94	1.9
17-95	1.9
17-96	1.9
17-97	1.9
17-98	1.9
17-99	1.10
17-100	1.9
17-101	1.9
17-102	1.9
17-103	1.9
17-104	1.9
17-105	1.9
17-106	1.9
17-107	1.9
17-108	1.9
17-109	1.48
17-115	1.48
17-116	1.9
17-120	1.10
17-121	1.10
17-122	1.10
17-124	1.48
17-125	1.10
17-131	1.51
17-132	1.29
17-133	1.50
17-149	1.52
17-150	1.52
17-151	1.52
17-701	7.40
17-702	1.49
17-703	1.49
17-801	1.48
17-802	1.48
17-803	1.48
17-804	1.48
18-18	1.11
18-19	1.11
18-20	1.11
18-21	1.11
18-23	1.11
18-50	9.22
18-51	9.22
18-52	9.22
18-53	9.22
18-54	9.22
18-55	9.22
18-56	9.22
18-57	9.22
18-58	9.22
18-59	9.22
18-60	9.22
18-61	9.22
18-62	9.22
18-63	9.22
18-64	9.22
18-65	9.22
18-66	9.22
18-67	9.22
18-68	9.22
18-69	9.22
18-70	9.22
18-71	9.22
18-72	9.22
18-73	9.22
18-83	1.53
18-103	9.21
18-104	1.8
18-106	1.6
18-107	1.6
18-108	1.6
18-110	9.21
18-181	9.21
18-187	1.9
18-188	1.9
18-190	1.9
18-191	1.9
18-192	1.9
18-193	1.9
18-222	1.8
18-230	1.8
18-231	1.8
18-234	9.23
18-258	1.9
18-259	1.9
18-260	1.9
18-261	1.9
18-262	1.9
18-263	1.9
18-264	1.9
18-265	1.9
18-274	9.23
18-275	1.8
18-276	9.23
18-330	1.8
18-331	1.8
18-332	1.8
18-333	1.8
18-335	1.8
18-336	1.8
18-346	1.7
18-427	9.20
18-428	9.20
18-429	9.20
18-430	9.20
18-432	9.20
18-433	9.20
18-441	9.20
18-442	9.20
18-443	9.20
18-444	9.20
18-445	9.20
18-446	9.20
18-447	9.20
18-448	9.20
18-451	9.20
18-454	9.20
18-455	9.20
18-456	9.20
18-458	9.20
18-459	9.20
18-460	9.20
18-461	9.20
18-481	9.21
18-483	9.21
18-484	9.21
18-485	9.21
18-530	1.7
18-531	1.7
18-533	1.7
18-535	1.10
18-536	1.7
18-567	1.53
18-568	1.53
18-569	1.53
18-574	9.20
18-578	9.20
18-579	9.20
18-580	9.20
18-584	9.19
18-585	9.19
18-586	9.19
18-587	9.19
18-589	9.19
18-590	9.19
18-591	9.19
18-602	1.53
18-604	1.53
18-606	1.53
18-608	1.53
18-610	1.53
18-612	1.53
18-614	1.53
18-616	1.53
18-618	1.53
18-620	1.53
18-622	1.53
18-685	9.21
18-687	9.21
18-688	9.21
18-695	9.21
18-699	9.21
18-701	1.6
18-702	1.6
18-703	1.6
18-704	1.6
18-705	1.6
18-706	1.6
18-707	1.6
18-708	1.6
18-709	1.6
18-710	1.6
18-711	1.6
18-712	1.6
18-713	1.6
18-714	1.6
18-715	1.6
18-716	1.6
18-717	1.6
18-718	1.6
18-719	1.6
18-720	1.6
18-721	1.6
18-722	1.6
18-723	1.6
18-724	1.6
18-730	1.6
18-731	1.6
18-732	1.6
18-733	1.6
18-734	1.6
18-735	1.6
18-736	1.6
18-737	1.6
18-738	1.6
18-739	1.6
18-740	1.6
18-741	1.6
18-742	1.6
18-743	1.6
18-744	1.6
18-745	1.6
18-746	1.6
18-747	1.6
18-748	1.6
18-749	1.6
18-750	1.6
18-751	1.6
18-752	1.6
18-753	1.6
18-754	1.6
18-760	1.6
18-773	9.20
18-781	9.21
18-782	9.21
18-784	9.21
18-785	9.21
18-790	12.15
18-791	12.15
18-792	12.15
18-795	9.20
18-796	9.20
18-797	9.20
18-798	9.20
18-799	9.20
18-800	9.20
18-801	9.20
18-802	9.20
18-803	9.20
18-804	9.20
18-805	9.20
19-2	2.9
19-5	2.14
19-6	2.14
19-20	2.9
19-22	2.11
19-25	2.13
19-26	2.13
19-27	2.13
19-28	2.13
19-30	2.13
19-31	2.13
19-43	2.14
19-51	2.15
19-53	2.13
19-57	2.11
19-60	2.14
19-61	2.14
19-62	2.11
19-64	2.14
19-65	2.11
19-73	2.9
19-75	2.11
19-76	2.12
19-77	2.11
19-79	2.9
19-80	2.9
19-83	2.9
19-84	2.11
19-85	2.14
19-89	2.11
19-90	2.15
19-91	2.15
19-118	2.11
19-120	2.9
19-121	2.11
19-123	2.11
19-136	2.13
19-137	2.15
19-140	2.14
19-143	2.14
19-145	2.13
19-147	2.13
19-148	2.12
19-152	2.10
19-154	2.13
19-156	2.12
19-157	2.10
19-159	2.10
19-165	2.15
19-168	2.10
19-170	2.12
19-172	2.13
19-179	2.10
19-183	2.10
19-189	2.14
19-246	2.15
19-262	2.11
19-263	2.11
19-265	2.11
19-269	2.15
19-270	2.10
19-271	2.10
19-272	2.10
19-273	2.15
19-274	2.15
19-283	2.12
19-290	2.12
19-291	2.12
19-292	2.12
19-293	2.12
19-301	2.14
19-305	2.15
19-306	2.15
19-307	2.15
20-1	8.4
20-20	8.4
20-40	8.2
20-41	8.2
20-51	8.4
20-53	8.4
20-59	8.2
20-60	8.2
20-61	8.4
20-62	8.2
20-63	8.2
20-65	8.2
20-66	8.4
20-93	8.4
20-94	8.4
20-98	8.3
20-99	8.3
20-100	8.3
20-101	8.4
20-102	8.4
20-110	8.3
20-112	8.3
20-125	8.3
20-137	8.3
20-139	8.3
20-141	8.4
21-1	8.10
21-9	8.11
21-10	8.9
21-21	8.10
21-23	8.9
21-32	8.42
21-38	8.6
21-55	8.7
21-56	8.7
21-62	8.43
21-63	8.43
21-68	8.10
21-72	8.44
21-90	8.44
21-91	8.44
21-92	8.44
21-101	8.7
21-102	8.7
21-106	8.9
21-107	8.6
21-108	8.53
21-111	8.46
21-115	4.53
21-116	4.52
21-118	8.6
21-123	8.42
21-132	4.52
21-133	8.11
21-134	8.9
21-136	8.5
21-137	8.8
21-138	8.8
21-141	8.9
21-145	8.47
21-146	8.47
21-150	8.47
21-152	8.47
21-154	8.47
21-158	8.8
21-160	8.9
21-161	8.42
21-163	8.42
21-164	8.42
21-166	8.7
21-170	8.43
21-171	8.6
21-172	8.6
21-173	8.47
21-174	8.47
21-177	8.10
21-178	8.10
21-180	8.53
21-181	6.96
21-182	8.53
21-183	8.53
21-184	8.53
21-185	8.53
21-186	8.53
21-188	8.44
21-189	8.42
21-190	8.53
21-194	8.9
21-195	8.9
21-196	8.9
21-197	8.9
21-198	8.9
21-199	8.9
21-201	8.9
21-203	8.10
21-204	8.10
21-207	8.42
21-211	8.53
21-237	8.53
21-238	8.53
21-239	8.46
21-249	8.7
21-250	8.7
21-252	8.9
21-253	8.9
21-260	4.53
21-261	8.9
21-262	8.9
21-263	8.47
21-264	8.47
21-265	8.10
21-274	8.6
21-275	8.6
21-276	8.6
21-303	8.6
21-304	8.42
21-305	8.44
21-306	8.44
21-307	8.34
21-315	8.47
21-316	8.47
21-321	13.13
21-322	8.6
21-323	8.6
21-324	8.6
21-329	8.6
21-330	8.8
21-331	8.8
21-332	8.8
21-333	8.8
21-334	8.8
21-335	8.8
21-340	8.8
21-341	8.8
21-343	8.8
21-344	8.8
21-345	8.8
21-346	8.8
21-347	8.8
21-361	8.44
21-365	8.6
21-366	8.6
21-370	8.8
21-371	8.8
21-372	8.8
21-403	4.55
21-404	4.55
21-406	4.55
21-407	4.55
21-408	4.55
21-409	4.55
21-410	4.55
21-411	4.55
21-412	4.55
21-413	4.55

MIDWEST PART NO.	BOOK PAGE
21-414	4.55
21-415	4.55
21-416	4.55
21-418	4.55
21-419	4.58
21-420	4.55
21-426	4.55
21-427	4.55
21-428	4.55
21-431	4.55
21-434	4.55
21-435	4.55
21-436	4.55
21-440	8.44
21-441	8.7
21-443	8.7
21-444	8.7
21-445	8.7
21-446	8.7
21-447	4.55
21-448	4.55
21-449	4.55
21-457	4.55
21-458	4.55
21-459	4.55
21-460	4.55
21-461	4.55
21-462	4.55
21-463	4.55
21-464	4.55
21-465	4.55
21-466	8.42
21-467	8.42
21-530	8.43
21-540	8.48
21-615	8.10
21-616	8.10
21-619	1.50
22-1	4.45
22-3	7.46
22-5	7.46
22-6	4.43
22-9	4.42
22-45	4.22
22-46	4.45
22-49	7.43
22-53	4.26
22-71	7.19
22-72	4.44
22-77	4.45
22-79	7.46
22-80	4.22
22-81	7.46
22-82	7.43
22-90	4.44
22-91	4.44
22-92	4.44
22-93	4.44
22-97	4.26
22-98	4.45
22-99	4.26
22-100	7.46
22-101	4.42
22-107	4.22
22-111	4.26
22-113	4.44
22-114	4.45
22-115	4.22
22-121	4.45
22-122	4.45
22-123	4.42
22-124	4.42
22-126	4.22
22-127	4.46
22-128	4.46
22-129	4.46
22-130	4.46
22-136	4.46
22-137	4.46
22-138	4.46
22-139	4.22
22-140	4.44
22-141	4.44
22-142	4.44
22-143	4.44
22-144	7.46
22-145	4.46
22-146	4.46
22-147	4.46
22-148	4.46
22-149	4.46
22-150	4.46
22-151	4.22
22-152	4.46
22-153	4.46
22-154	4.46
22-155	4.46
22-160	4.47
22-161	4.47
22-165	4.26
22-167	4.26
22-180	4.43
22-181	4.43
22-193	4.42
22-194	4.42
22-195	4.42
22-255	4.15
22-264	4.43
22-266	4.45
22-267	4.45
22-272	4.47
22-273	4.47
22-277	4.47
22-278	4.47
22-279	4.47
22-280	4.47
22-281	4.47
22-282	4.47
22-283	4.47
23-1	4.43
23-2	4.43
23-100	4.43
23-108	2.7
23-130	4.45
23-131	4.45
23-134	4.42
23-140	4.43
23-144	4.43
24-1	11.4
24-101	13.5
24-102	13.5
24-103	13.5
24-104	13.5
24-105	13.5
24-106	13.5
24-107	13.5
24-108	13.5
24-109	13.5
24-110	13.5
24-111	13.5
24-112	13.5
24-113	13.5
24-115	13.5
24-116	13.5
24-117	13.5
24-119	13.5
24-120	13.5
24-121	13.5
24-122	13.5
24-123	13.5
25-2	8.50
25-4	8.51
25-25	8.49
25-55	8.51
25-60	8.49
25-68	8.48
25-69	8.48
25-70	8.49
25-71	8.49
25-77	8.49
25-78	8.49
25-79	8.49
25-80	8.49
25-81	8.49
25-85	8.48
25-86	8.50
25-90	8.49
25-107	8.48
25-111	8.51
25-112	8.51
25-116	8.44
25-122	8.49
25-123	8.49
25-128	8.48
25-129	8.48
25-132	8.49
25-142	8.49
25-143	8.49
25-144	8.49
25-145	8.50
25-146	8.50
25-147	8.50
25-150	8.51
25-151	8.50
25-152	8.50
25-160	8.49
25-162	8.48
25-175	8.48
25-176	8.48
25-177	8.48
25-178	8.48
25-179	8.48
26-95	8.41
26-98	8.41
26-100	8.42
26-107	8.42
26-108	8.42
26-109	8.42
26-110	8.42
26-112	8.41
26-113	8.41
26-114	8.41
26-116	8.42
26-118	8.42
26-119	8.41
26-127	8.41
26-128	8.41
26-129	8.41
26-133	8.41
26-170	8.41
26-200	8.40
26-201	8.40
26-202	8.40
26-203	8.40
26-204	8.40
26-205	8.40
26-206	8.40
26-208	8.40
26-209	8.40
26-210	8.40
26-211	8.40
26-220	8.41
26-221	8.41
26-225	8.41
26-226	8.41
26-229	8.41
26-230	8.41
26-241	8.41
27-53	3.15
27-54	3.15
27-57	3.2
27-60	3.21
27-61	3.21
27-62	3.19
27-63	3.15
27-65	3.15
27-67	3.15
27-68	3.15
27-69	3.15
27-70	3.10
27-71	3.21
27-72	3.21
27-73	3.21
27-74	3.21
27-75	3.21
27-76	3.21
27-77	3.15
27-88	3.13
27-94	3.21
27-95	3.15
27-96	3.11
27-97	3.22
27-101	3.15
27-106	3.19
27-107	3.15
27-108	3.21
27-109	3.21
27-110	3.19
27-115	3.8
27-117	3.21
27-118	3.13
27-119	3.13
27-120	3.21
27-121	3.21
27-122	3.19
27-130	3.10
27-134	3.8
27-146	3.8
27-147	3.8
27-148	3.8
27-158	3.11
27-159	3.11
27-160	3.11
27-161	3.11
27-162	3.19
27-163	3.19
27-164	3.13
27-165	3.13
27-166	3.10
27-167	3.10
27-168	3.10
27-169	3.10
27-170	3.10
27-171	3.10
27-172	3.10
27-173	3.10
27-185	3.10
27-187	3.18
27-189	3.18
27-200	3.18
27-201	3.18
27-202	3.8
27-203	3.8
27-205	3.8
27-207	3.9
27-209	3.9
27-211	3.9
27-212	3.9
27-213	3.9
27-215	3.8
27-218	3.10
27-219	3.9
27-222	3.9
27-223	3.9
27-224	3.9
27-225	3.9
27-226	3.9
27-227	3.9
27-228	3.9
27-229	3.9
27-230	3.9
27-231	3.9
27-232	3.9
27-233	3.9
27-234	3.9
27-239	3.9
27-240	3.9
27-241	3.9
27-242	3.9
27-243	3.9
27-244	3.9
27-245	3.9
27-246	3.9
27-247	3.9
27-248	3.9
27-249	3.9
27-250	3.9
27-253	3.18
27-254	3.18
27-300	3.9
27-301	3.9
29-45	3.18
29-52	3.17
29-61	3.17
29-67	3.18
29-68	3.18
29-76	3.18
29-78	3.17
29-79	3.17
29-82	3.17
29-87	3.17
29-101	3.18
29-105	3.17
29-106	3.17
29-115	3.17
29-116	3.17
29-250	3.17
29-251	3.17
29-252	3.17
29-253	3.17
29-254	3.18
29-255	3.18
30-4	5.21
30-8	5.21
30-11	5.21
30-35	5.21
30-35	5.21
30-38	5.21
30-48	5.21
30-50	5.21
31-80	5.21
31-81	5.21
31-82	5.21
31-83	5.21
31-84	5.21
31-85	5.21
31-87	5.21
31-88	5.21
31-89	5.21
31-92	5.21
31-93	5.21
31-94	5.21
31-96	5.21
32-1	3.4
32-4	3.3
32-6	5.48
32-7	5.48
32-8	5.48
32-9	3.3
32-11	3.3
32-34	5.48
32-104	5.27
32-106	5.28
32-107	5.28
32-109	5.30
32-111	5.28
32-119	5.28
32-124	5.48
32-126	5.37
32-132	5.28
32-133	5.29
32-135	5.27
32-139	5.48
32-170	5.30
32-171	5.28
32-172	5.28
32-178	5.30
32-186	5.48
32-190	5.30
32-191	5.50
32-192	5.48
32-193	5.48
32-196	5.48
32-197	5.48
32-199	5.48
32-200	5.48
32-201	5.48
32-204	5.48
32-205	5.48
32-206	5.48
32-208	5.48
32-209	5.48
32-210	5.48
32-211	5.48
32-212	5.48
32-213	5.48
32-214	5.48
32-215	5.48
32-216	5.48
32-217	5.48
32-219	5.48
32-220	5.48
32-221	5.48
32-222	5.48
32-223	5.48
32-224	5.48
32-226	5.48
32-227	5.48
32-228	5.48
32-229	5.48
32-230	5.49
32-236	5.48
32-237	5.48
32-238	5.48
32-239	5.48
32-242	5.48
32-243	5.48
32-245	5.49
32-247	5.49
32-248	5.49
32-249	5.49
32-255	5.50
32-260	2.4
32-262	2.4
32-263	2.4
32-268	2.4
32-280	2.4
32-281	5.48
32-282	5.48
32-283	5.48
32-284	5.48
32-285	5.48
32-286	5.48
32-287	5.48
32-288	5.48
32-289	5.48
33-1	5.47
33-2	5.47
33-3	5.47
33-4	5.47
33-5	5.47
33-6	5.47
33-7	5.47
33-8	5.47
33-9	5.47
33-10	5.47
33-11	5.47
33-12	5.47
33-13	5.47
33-14	5.47
33-15	5.47
33-16	5.47
33-17	5.47
33-18	5.47
33-19	5.47
33-20	5.47
33-21	5.47
33-24	5.28
33-26	2.4
33-27	2.4
33-109	5.28
33-118	5.28
33-177	5.30
33-178	5.30
33-179	5.50
33-180	5.28
33-181	5.50
33-182	5.30
33-183	5.30
33-184	5.27
33-187	5.27
33-193	5.28
33-194	5.28
33-195	5.25
33-196	5.25
33-199	5.25
33-200	5.25
33-201	5.25
33-210	5.25
33-211	5.25
33-213	5.25
33-214	5.25
33-216	5.26
33-220	5.26
33-221	5.26
33-222	5.26
33-225	5.51
33-227	5.51
33-232	5.26
33-233	5.26
33-234	5.26
33-236	2.4
33-237	2.4
33-238	2.4
33-242	2.4
33-243	2.4
33-251	5.46
33-252	5.46
33-253	5.46
33-254	5.46
33-255	5.46
33-256	5.46
33-257	5.46
33-258	5.46
33-259	5.46
33-260	5.46
33-261	5.46
33-262	5.46
33-263	5.46
33-264	5.46
33-265	5.46
33-266	5.46
33-267	5.46
33-268	5.46
33-269	5.46
33-270	5.46
33-271	5.46
33-272	5.46
33-273	5.46

MIDWEST PART NO.	BOOK PAGE
33-274	5.46
33-275	5.46
33-276	5.46
33-277	5.46
33-278	5.50
33-280	5.25
33-281	5.25
33-295	5.17
33-296	5.52
33-300	5.49
33-301	5.49
33-302	5.49
33-303	5.49
33-304	5.49
33-305	5.49
33-306	5.51
33-307	5.51
34-5	4.10
34-6	4.10
34-7	4.10
34-70	4.10
34-76	4.9
34-77	4.9
34-78	4.9
34-89	4.11
34-90	4.10
34-91	4.11
34-92	4.9
34-93	4.9
34-101	4.9
34-104	4.9
34-105	4.9
34-110	4.11
34-115	4.9
34-117	4.9
34-119	4.10
34-125	4.11
34-126	4.9
34-127	4.11
34-128	4.10
34-129	4.10
34-133	4.10
34-134	4.10
34-139	4.10
34-148	4.10
34-155	4.10
34-159	4.10
34-167	4.11
34-168	4.11
34-169	4.11
34-170	4.11
34-171	4.11
34-173	4.11
34-174	4.11
35-1	4.14
35-2	4.14
35-3	4.14
35-4	4.13
35-6	4.15
35-7	4.15
35-14	4.14
35-15	4.14
35-16	4.14
35-17	4.14
35-36	4.15
35-40	4.14
35-42	4.14
35-43	4.15
35-44	4.13
35-47	4.14
35-51	4.14
35-52	4.15
35-53	4.13
35-54	4.16
35-55	4.13
35-65	4.15
35-66	4.12
35-68	4.12
35-69	4.16
35-73	4.14
35-76	4.12
35-85	4.14
35-86	4.15
35-87	4.14
35-90	4.14
35-91	4.14
35-92	4.12
35-96	4.12
35-105	4.15
35-106	4.15
35-108	4.13
35-109	4.13
35-112	4.12
35-113	4.12
35-127	4.12
35-128	4.12
35-140	4.15
35-153	4.13
35-158	4.13
36-304	5.13
36-305	5.13
36-309	5.13
36-310	5.13
36-311	5.13
36-312	5.13
36-313	5.13
36-314	5.13
36-327	5.13
36-328	5.13
36-332	5.15
36-341	5.15
36-343	5.15
36-344	5.13
36-347	5.15
36-349	5.15
36-350	5.13
36-353	5.15
36-355	5.15
36-356	5.13
36-359	5.15
36-361	5.15
36-390	5.13
36-395	5.13
36-397	5.15
36-399	5.13
36-411	5.16
36-412	5.14
36-413	5.16
36-414	5.15
36-415	5.14
36-416	5.15
36-417	5.14
36-418	5.16
36-419	5.15
36-445	5.13
36-485	5.13
36-486	5.13
36-487	5.13
36-490	5.14
36-491	5.14
36-497	5.16
36-498	5.16
36-500	5.14
36-502	5.14
36-503	5.16
36-505	5.16
36-602	5.13
36-603	5.13
36-604	5.13
36-605	5.13
36-606	5.13
36-607	5.13
36-650	5.12
36-651	5.12
36-652	5.12
36-653	5.12
36-654	5.12
36-655	5.12
36-656	5.12
36-657	5.12
36-658	5.12
36-659	5.12
36-660	5.12
36-661	5.12
36-730	5.13
36-731	5.13
36-732	5.13
36-733	5.13
36-734	5.13
36-735	5.14
36-736	5.14
36-745	5.15
36-746	5.14
36-752	5.14
36-960	5.14
36-961	5.14
36-969	5.14
36-970	5.14
36-971	5.15
37-501	5.9
37-509	5.9
37-510	5.9
37-511	5.9
37-513	5.8
37-521	5.8
37-522	5.8
37-523	5.8
37-524	5.9
37-525	5.9
37-526	5.9
37-527	5.9
37-529	5.9
37-530	5.9
37-531	5.9
37-532	5.8
37-533	5.8
37-534	5.8
37-535	5.8
37-537	5.8
37-538	5.8
37-539	5.8
37-540	5.9
37-541	5.8
37-542	5.9
37-543	5.8
37-544	5.9
37-545	5.8
37-546	5.9
37-547	5.8
37-548	5.9
37-549	5.8
37-550	5.16
37-551	5.16
37-552	5.16
37-553	5.16
37-554	5.16
37-555	5.16
37-556	5.16
37-557	5.16
37-558	5.16
37-560	5.9
37-561	5.8
37-562	5.9
37-564	5.10
37-565	5.9
37-566	5.8
37-567	5.10
37-580	5.9
37-581	5.8
37-600	5.4
37-601	5.4
37-602	5.4
37-603	5.4
37-604	5.4
37-605	5.4
37-606	5.4
37-607	5.4
37-608	5.4
37-611	5.4
37-612	5.4
37-613	5.4
37-614	5.4
37-615	5.4
37-616	5.4
37-620	5.6
37-621	5.6
37-622	5.6
37-623	5.6
37-624	5.6
37-625	5.6
37-626	5.6
37-627	5.6
37-628	5.6
37-630	5.6
37-631	5.6
37-632	5.6
37-633	5.6
37-634	5.6
37-635	5.6
37-640	5.5
37-641	5.5
37-642	5.5
37-643	5.5
37-644	5.5
37-645	5.5
37-646	5.5
37-647	5.5
37-648	5.5
37-649	5.5
37-650	5.5
37-651	5.5
37-652	5.5
37-653	5.5
37-654	5.5
37-660	5.7
37-661	5.7
37-662	5.7
37-663	5.7
37-664	5.7
37-665	5.7
37-666	5.7
37-667	5.7
37-668	5.7
37-669	5.7
37-670	5.7
37-671	5.7
37-672	5.7
37-673	5.7
37-674	5.7
37-720	5.10
37-721	5.10
37-722	5.10
37-723	5.10
37-724	5.10
37-725	5.10
37-726	5.10
37-727	5.10
37-728	5.10
37-729	5.10
37-730	5.10
37-731	5.10
37-732	5.10
37-733	5.10
37-734	5.10
37-735	5.10
37-736	5.10
37-750	5.11
37-751	5.11
37-752	5.11
37-753	5.11
37-754	5.11
37-755	5.11
37-800	5.20
37-801	5.20
37-802	5.20
37-803	5.20
37-805	5.2
37-806	5.2
37-807	5.2
37-808	5.2
37-809	5.2
37-810	5.2
37-811	5.2
37-812	5.2
37-813	5.2
37-814	5.2
37-815	5.2
37-820	5.3
37-821	5.3
37-822	5.3
37-823	5.3
37-824	5.3
37-825	5.3
37-826	5.3
37-827	5.3
37-828	5.3
37-829	5.3
37-830	5.3
38-317	3.11
38-318	3.11
38-319	3.11
38-320	3.11
38-322	3.11
38-325	3.11
38-326	3.11
38-327	3.11
38-328	3.11
38-329	3.11
38-330	3.11
38-331	3.11
38-332	3.11
38-333	3.11
38-334	3.11
38-335	3.11
38-336	3.11
38-337	3.11
38-338	3.11
38-339	3.11
38-340	3.11
38-341	3.11
39-6	8.18
39-7	8.18
39-8	8.18
39-9	8.18
39-10	8.18
39-11	8.18
39-12	8.18
39-13	8.18
39-14	8.18
39-15	8.18
39-16	8.18
39-23	8.25
39-126	8.13
39-128	8.13
39-131	8.13
39-132	8.13
39-133	8.13
39-134	8.13
39-137	8.13
39-138	8.13
39-139	8.13
39-141	8.13
39-142	8.13
39-143	1.10
39-144	1.10
39-147	1.10
39-148	1.49
39-152	1.9
39-153	1.9
39-160	8.31
39-161	8.31
39-162	8.30
39-163	8.30
39-164	8.30
39-165	8.30
39-166	8.30
39-167	8.30
39-168	8.30
39-169	8.30
39-170	8.30
39-171	8.30
39-172	8.30
39-173	8.30
39-174	8.30
39-175	8.30
39-176	8.30
39-177	8.30
39-178	8.30
39-179	8.30
39-180	8.30
39-181	8.30
39-182	8.30
39-183	8.30
39-184	8.30
39-185	8.30
39-186	8.30
39-187	8.30
39-188	8.30
39-189	8.30
39-190	8.30
39-191	8.31
39-192	8.31
39-193	8.31
39-194	8.31
39-195	8.30
39-196	8.30
39-197	8.30
39-198	8.30
39-199	8.30
39-200	8.30
39-201	8.30
39-202	8.30
39-203	8.30
39-204	8.30
39-205	8.30
39-206	8.30
39-207	8.31
39-208	8.31
39-209	8.31
39-210	8.31
39-211	8.31
39-212	8.31
39-213	8.31
39-214	8.31
39-215	8.31
39-216	8.31
39-217	8.31
39-218	8.31
39-219	8.31
39-220	8.31
39-310	8.35
39-344	8.29
39-346	8.27
39-347	8.27
39-355	8.30
39-357	8.30
39-358	8.30
39-362	8.18
39-363	8.18
39-364	8.29
39-369	8.31
39-370	8.18
39-371	8.18
39-372	8.18
39-373	8.18
39-374	8.18
39-375	8.18
39-376	8.18
39-377	8.18
39-378	8.18
39-379	8.18
39-380	8.18
39-381	8.18
39-382	8.18
39-383	8.18
39-384	8.31
39-385	8.30
39-386	8.30
39-387	8.30
39-388	8.30
39-389	8.31
39-401	8.18
39-402	8.18
39-403	8.18
39-404	8.18
39-405	8.18
39-406	8.18
39-407	8.18
39-408	8.34
39-409	8.30
39-410	8.30
39-411	8.30
39-412	8.18
39-414	8.29
39-418	8.30
39-421	8.30
39-422	8.30
39-424	8.30
39-425	8.30
39-426	8.30
39-428	8.30
39-431	8.18
39-432	8.18
39-434	8.18
39-435	8.18
39-440	8.36
39-441	8.36
39-444	8.36
39-446	8.35
39-447	8.35
39-448	8.35
39-449	8.35
39-450	8.35
39-485	8.12
39-499	8.12
39-500	8.12
39-505	8.12
39-508	8.12
39-516	8.12
39-517	8.12
39-518	8.12
39-520	8.12
39-521	8.12
39-525	8.26
39-535	8.29
39-536	8.29
39-537	8.29
39-538	8.29
39-539	8.29
39-540	8.29
40-16	13.2
40-27	7.64
40-28	7.64
40-30	13.3
40-31	13.2
40-36	13.3
40-38	13.3
40-40	13.2
40-44	13.2

MIDWEST PART NO.	BOOK PAGE
40-45	13.2
40-47	13.3
40-51	13.3
40-54	13.2
40-56	13.3
40-57	13.3
40-92	13.3
40-97	13.3
40-105	13.2
40-111	13.2
40-114	13.2
40-115	13.2
40-117	13.2
40-119	13.2
40-126	13.2
40-127	13.5
40-128	13.5
40-129	13.5
40-130	13.5
40-131	13.5
40-132	13.5
40-133	13.5
40-134	13.4
40-135	13.4
40-136	13.4
40-137	13.4
40-138	13.4
40-139	13.4
40-140	13.4
40-141	13.4
40-142	13.4
40-143	13.4
40-144	13.4
40-145	13.4
40-146	13.4
40-147	13.6
40-148	13.6
40-149	13.6
40-150	13.6
40-151	13.6
40-152	13.6
40-153	13.6
40-154	13.6
40-155	13.6
40-156	13.6
40-157	13.6
40-158	13.6
40-159	13.6
40-160	13.6
40-161	13.6
40-162	13.6
40-163	13.6
40-164	13.6
40-165	13.6
40-166	13.6
40-167	13.6
40-168	13.6
40-169	13.6
40-170	13.6
40-171	13.6
40-173	13.6
40-174	13.6
40-175	13.6
40-176	13.6
40-177	13.6
40-178	13.6
40-179	13.6
40-180	13.6
40-181	13.6
40-182	13.6
40-183	13.6
40-184	13.6
40-185	13.6
40-186	13.6
40-187	13.6
40-188	13.6
40-189	13.6
40-190	13.6
40-191	13.6
40-192	13.6
40-193	13.6
40-194	13.6
40-195	13.6
40-196	13.6
40-198	13.4
40-199	13.4
40-200	13.4
40-201	13.4
40-202	13.4
40-203	13.4
40-204	13.4
40-205	13.4
40-206	13.4
40-207	13.4
40-208	13.4
40-209	13.4
40-210	13.4
40-211	13.4
40-212	13.4
40-213	13.4
40-214	13.4
40-215	13.4
40-216	13.4
40-217	13.4
40-218	13.4
40-219	13.4
40-220	13.4
40-221	13.4
40-222	13.4
40-223	13.4
40-224	13.4
40-225	13.4
40-226	13.4
40-227	13.4
40-228	13.4
40-229	13.4
40-230	13.4
40-231	13.4
40-232	13.4
40-233	13.4
40-234	13.4
40-235	13.4
40-236	13.4
40-237	13.4
40-238	13.4
40-239	13.4
40-240	13.4
40-241	13.4
40-242	13.4
40-243	13.4
40-244	13.4
40-245	13.4
40-246	13.4
40-247	13.4
40-248	13.4
40-249	13.4
40-250	13.4
40-252	13.4
40-253	13.4
40-254	13.4
40-255	13.4
40-256	13.4
40-257	13.4
40-258	13.4
40-259	13.4
40-260	13.4
40-261	13.4
40-262	13.4
40-263	13.4
40-264	13.4
40-265	13.4
40-266	13.6
40-267	13.6
40-268	13.6
40-269	13.6
40-270	13.6
40-271	13.6
40-272	13.6
40-273	13.6
40-274	13.6
40-275	13.6
40-276	13.6
40-277	13.6
40-278	13.6
40-279	13.6
40-280	13.6
40-281	13.6
40-282	13.6
40-283	13.6
40-284	13.6
40-285	13.6
40-286	13.6
40-287	13.6
40-288	13.6
40-289	13.6
40-290	13.6
40-291	13.4
40-292	13.4
40-293	13.4
40-294	13.4
40-295	13.4
40-296	13.4
40-297	13.4
40-298	13.4
40-299	13.4
40-300	13.4
40-301	13.4
40-302	13.4
40-303	13.4
40-304	13.4
40-306	13.4
40-307	13.4
40-308	13.4
40-309	13.4
40-310	13.4
40-311	13.4
40-312	13.4
40-313	13.4
40-314	13.4
40-315	13.4
40-317	6.97
40-318	13.12
40-320	5.20
40-335	13.7
40-337	13.7
40-351	13.7
40-352	13.7
40-353	13.7
40-354	13.7
40-355	13.7
40-357	13.7
40-358	13.7
40-359	13.7
40-360	13.7
40-361	13.7
40-362	13.7
40-363	13.7
40-364	13.7
40-371	13.7
40-372	13.7
40-373	13.7
40-374	13.7
40-375	13.7
40-376	13.7
40-401	13.7
40-403	13.7
40-406	13.7
40-407	13.7
40-408	13.7
40-409	13.7
40-416	13.7
40-429	13.7
40-434	13.7
40-586	13.3
40-587	13.2
40-589	13.3
40-591	13.3
40-593	13.2
40-594	13.3
40-600	13.3
40-601	13.3
40-602	13.3
40-616	6.66
40-617	6.66
40-619	6.21
40-684	2.4
40-710	1.25
40-711	13.7
40-713	13.7
40-714	13.7
40-715	13.7
40-716	13.7
40-717	13.7
40-718	13.7
40-722	13.7
40-723	13.7
40-724	13.7
40-726	13.7
40-728	13.7
40-729	13.7
40-735	5.50
40-801	13.7
40-802	13.7
40-803	13.7
40-804	13.7
40-805	13.7
40-806	13.7
40-807	13.7
40-808	13.7
40-809	13.7
40-810	13.7
40-811	13.7
40-812	13.7
40-813	13.7
40-814	13.7
40-815	13.7
40-816	13.7
40-817	13.7
40-818	13.7
41-1	13.11
41-2	13.11
41-3	13.11
41-4	13.11
41-5	13.11
41-6	13.11
41-8	13.11
41-9	13.11
41-11	13.11
41-12	13.11
41-13	13.11
41-16	13.11
41-17	13.11
41-22	11.5
41-23	11.5
41-25	7.32
41-26	3.19
41-103	3.19
41-108	7.65
41-109	7.65
41-110	6.37
41-111	6.37
41-112	6.37
41-113	5.49
41-114	7.65
41-123	5.49
41-124	5.50
41-127	3.19
41-128	7.65
41-129	5.20
41-130	5.20
41-131	6.78
41-133	13.7
41-134	13.7
41-135	13.7
41-137	2.20
41-139	7.87
41-140	7.87
41-143	7.87
41-144	3.13
41-145	3.15
41-147	2.17
41-148	8.33
41-149	2.20
41-150	2.20
41-152	13.10
41-155	13.10
41-156	13.10
41-162	13.8
41-163	13.8
41-164	7.20
41-165	7.83
41-166	7.82
41-167	7.3
41-179A	6.26
41-180	2.4
41-184	2.4
41-185	2.4
41-186	2.4
41-187	2.4
41-200	13.13
41-201	13.13
41-202	13.13
41-203	13.13
41-204	13.13
41-205	13.13
41-206	13.13
41-207	13.13
41-208	13.13
41-209	13.13
41-210	13.13
41-211	13.13
41-212	13.13
41-213	13.13
41-214	13.13
41-215	13.13
41-216	13.13
41-217	13.12
41-218	13.12
41-219	13.12
41-220	13.12
41-267	7.46
41-284	1.25
41-285	7.12
41-332	13.13
41-333	13.13
41-334	13.13
41-335	13.13
41-336	6.36
41-337	6.36
41-343	7.46
41-349	6.39
41-398	6.37
41-401	6.60
41-404	13.13
41-405	13.13
41-406	13.13
41-407	13.13
41-412	13.12
41-413	13.12
41-414	13.12
41-415	13.12
41-416	13.13
41-418	13.10
41-419	13.13
41-420	6.39
41-425	5.18
41-427	4.11
41-430	4.11
41-431	4.11
41-432	4.11
41-463	5.18
41-492	4.56
41-493	4.56
41-494	4.56
41-495	4.56
41-496	4.56
41-497	4.56
41-498	4.56
41-499	4.56
41-500	13.8
41-501	13.8
41-502	13.8
41-503	13.8
41-504	13.8
41-505	13.8
41-506	13.8
41-507	13.8
41-508	13.8
41-509	13.8
41-510	13.8
41-511	13.8
41-512	13.8
41-513	13.8
41-514	13.8
41-521	13.8
41-524	13.8
41-525	13.8
41-526	13.8
41-527	13.8
41-531	13.8
41-532	13.8
41-533	13.8
41-534	13.8
41-540	13.7
41-541	13.7
41-542	13.7
41-543	13.7
41-545	13.9
41-546	13.10
41-547	13.10
41-548	13.10
41-549	13.10
41-551	13.10
41-553	13.10
41-554	13.9
41-560	13.10
41-563	13.10
41-564	13.10
41-565	13.10
41-566	13.10
41-575	13.10
41-581	13.10
41-582	13.10
41-584	13.10
41-587	13.9
41-588	13.9
41-592	7.20
41-594	13.10
41-596	13.10
41-598	13.9
41-610	13.9
41-615	13.9
41-618	13.9
41-620	13.9
41-622	13.9
41-623	13.9
41-630	4.56
41-631	4.56
41-632	4.56
41-635	4.56
41-636	4.56
41-637	4.56
41-638	4.56
41-639	4.56
41-653	4.56
41-655	4.56
41-656	4.56
41-684	13.10
41-686	13.10
41-691	13.10
41-692	13.10
41-695	13.11
41-701	13.9
41-706	13.9
41-708	13.9
41-713	13.9
41-740	6.34
41-751	13.11
41-752	5.20
41-754	5.20
41-755	5.20
41-756	5.20
41-757	13.9
41-766	6.58
41-767	6.59
41-768	6.64
41-770	6.97
41-772	6.97
41-774	13.9
41-779	13.9
41-780	6.87
41-782	7.45
41-784	13.11
41-792	5.20
41-855	13.8
41-859	13.8
41-870	13.12
41-881	13.12
41-882	13.12
41-886	13.9
41-888	6.23
41-889	6.97
41-890	6.97
41-891	6.97
41-892	6.97
41-896	6.39
41-897	5.20
41-898	7.64
41-899	7.64
41-900	7.62
41-901	5.20
41-902	1.25
41-903	1.25
41-904	3.15
41-906	13.9
41-908	6.38
41-913	13.10
41-915	13.10
41-919	13.10
41-921	13.9
41-923	13.9
41-927	13.9
41-929	13.9
41-935	13.11
41-936	13.11
41-937	6.66
41-939	13.11
41-943	6.58
41-944	6.58
41-945	8.33
41-946	13.13
41-948	8.27
41-950	8.27
41-951	8.27
41-952	8.27
41-960	1.25
41-971	1.25
41-972	1.25
41-973	1.25

MIDWEST PART NO.	BOOK PAGE
41-975	13.14
41-979	13.8
41-983	7.32
41-987	6.37
41-989	6.97
41-995	2.17
41-996	2.17
41-997	6.97
41-998	6.97
42-89	8.19
42-90	8.17
42-91	8.17
42-99	8.19
42-120	8.21
42-121	8.18
42-122	8.18
42-126	8.18
42-127	8.18
42-128	8.18
42-129	8.18
42-130	8.18
42-143	8.18
42-152	8.24
42-153	8.24
42-156	8.24
42-190	8.19
42-191	8.19
42-252	8.24
42-302	8.23
42-303	8.23
42-305	8.23
42-422	8.24
42-423	8.24
42-424	8.24
42-425	8.24
42-426	8.25
42-427	8.25
42-428	8.25
42-429	8.25
42-431	8.25
42-433	8.25
42-434	8.25
42-435	8.25
42-436	8.25
42-437	8.25
42-439	8.25
42-440	8.25
42-441	8.25
42-445	8.25
42-446	8.25
42-447	8.24
42-448	8.24
42-449	8.25
42-460	8.27
42-461	8.27
42-462	8.27
42-463	8.27
42-464	8.27
42-465	8.27
42-466	8.27
42-467	8.27
42-468	8.27
42-469	8.27
42-470	8.27
42-471	8.28
42-472	8.27
42-473	8.27
42-474	8.27
42-475	8.26
42-476	8.26
42-477	8.26
42-478	8.26
42-479	8.26
42-480	8.26
42-481	8.26
42-482	8.26
42-484	8.26
42-485	8.26
42-486	8.26
42-487	8.26
42-488	8.26
42-489	8.26
42-490	8.26
42-491	8.26
42-492	8.26
42-493	8.26
42-494	8.26
42-495	8.26
42-496	8.26
42-497	8.26
42-498	8.26
42-499	8.26
42-500	8.26
42-501	8.26
42-502	8.26
42-503	8.26
42-504	8.26
42-505	8.26
42-506	8.26
42-507	8.26
42-508	8.26
42-509	8.26
42-510	8.26
42-511	8.26
42-513	8.26
42-514	8.26
42-515	8.26
42-516	8.26
42-517	8.26
42-518	8.27
42-519	8.26
42-520	8.26
42-521	8.26
42-523	8.27
42-524	8.27
42-525	8.27
42-526	8.27
42-527	8.24
42-528	8.24
42-529	8.26
42-530	8.26
42-531	8.26
42-532	8.26
42-533	8.26
42-534	8.26
42-535	8.26
42-536	8.26
42-538	8.26
45-1	4.61
45-23	4.18
45-24	4.18
45-32	4.18
45-33	4.18
45-34	4.28
45-36	4.61
45-37	4.61
45-38	4.61
45-40	4.18
45-41	4.61
45-44	4.61
45-47	4.61
45-52	4.61
45-53	4.61
46-6	4.39
46-11	4.40
46-12	4.40
46-13	4.40
46-14	4.40
46-17	4.39
46-18	4.39
46-19	4.39
46-20	4.39
46-21	4.39
46-22	4.40
46-23	4.40
46-50	4.37
46-51	4.37
46-52	4.37
46-93	4.40
46-94	4.40
46-95	4.40
46-98	4.38
46-99	4.38
46-100	4.38
46-103	4.37
46-107	4.37
46-117	4.37
46-122	4.38
46-130	4.37
46-131	4.37
46-134	4.39
46-201	4.38
46-204	4.38
46-209	4.38
46-210	4.38
46-225	4.38
46-239	4.39
47-19	4.18
47-20	4.18
47-21	4.18
47-22	4.16
47-23	4.16
47-24	4.19
47-25	4.19
47-26	4.20
47-50	4.36
47-52	4.21
47-55	4.22
47-56	4.23
47-57	4.20
47-58	7.43
47-60	4.23
47-63	7.40
47-72	4.30
47-75	4.32
47-80	4.18
47-82	4.18
47-83	4.18
47-89	4.19
47-92	4.42
47-93	7.43
47-96	4.18
47-97	4.18
47-100	4.35
47-101	4.16
47-102	4.20
47-103	7.41
47-105	4.18
47-106	4.24
47-107	4.34
47-108	4.23
47-109	4.22
47-111	4.17
47-113	4.17
47-115	4.17
47-117	4.19
47-118	4.19
47-120	4.17
47-121	4.17
47-123	4.16
47-126	4.24
47-127	4.24
47-130	4.24
47-148	7.46
47-149	4.19
47-150	4.19
47-157	4.23
47-160	7.40
47-162	4.19
47-164	4.17
47-165	4.17
47-166	4.17
47-167	4.17
47-168	4.17
47-169	4.17
47-170	4.17
47-171	4.17
47-176	4.16
47-177	4.16
47-178	4.16
47-179	4.16
47-180	4.16
47-181	4.16
47-182	4.19
47-183	4.19
47-195	4.25
47-196	4.25
47-197	4.25
47-201	4.24
47-202	4.24
47-220	4.17
47-221	4.17
47-231	4.17
47-234	4.17
47-235	4.17
47-243	4.24
47-253	4.28
47-256	4.24
47-257	4.24
47-258	4.24
47-259	4.24
47-260	4.24
47-268	4.16
47-275	1.52
47-276	1.52
47-277	1.52
47-278	1.52
47-299	4.24
47-310	2.5
47-312	2.5
47-330	4.41
47-331	4.41
47-366	4.25
47-367	4.25
47-415	4.25
47-440	4.41
47-441	4.41
47-495	4.41
47-496	4.41
47-501	4.23
47-502	4.23
47-506	4.56
47-507	4.56
47-508	4.56
47-509	4.56
47-510	4.56
47-511	4.56
47-512	4.56
47-513	4.56
47-514	4.56
47-515	4.56
47-516	4.56
47-517	4.56
47-518	4.56
47-519	4.56
47-520	4.56
47-521	4.56
47-522	4.56
47-523	4.56
47-524	4.56
47-525	4.56
47-526	4.56
47-527	4.56
47-529	4.56
47-530	4.56
47-540	4.41
47-541	4.41
47-546	4.41
47-547	4.41
47-700	4.23
47-701	4.23
47-702	4.23
47-703	4.23
47-704	4.23
47-705	4.23
47-706	4.23
47-707	4.23
47-708	4.23
48-100	4.62
48-101	4.62
48-102	4.63
48-103	4.63
48-104	4.62
48-105	4.62
48-106	4.62
48-107	4.63
48-108	4.63
48-109	4.62
48-110	4.62
48-111	4.62
48-112	4.63
48-113	4.63
48-114	4.62
48-115	4.62
48-116	4.63
48-117	4.63
48-150	4.63
48-151	4.62
48-152	4.63
48-153	4.63
48-154	4.62
48-155	4.63
48-156	4.63
48-157	4.62
48-158	4.62
48-159	4.62
48-160	4.63
48-161	4.63
48-162	4.62
48-163	4.62
48-164	4.62
48-165	4.63
48-200	4.64
48-201	4.64
48-202	4.64
48-203	4.64
48-204	4.64
48-205	4.64
48-206	4.64
48-207	4.64
48-208	4.64
48-209	4.64
48-306	4.60
48-372	4.60
48-665	4.60
48-802	4.60
48-803	4.60
48-805	4.60
49-100	4.54
49-101	4.54
49-102	4.54
49-103	4.54
49-104	4.54
49-105	4.54
49-106	4.54
49-107	4.54
49-108	4.54
49-109	4.54
49-110	4.54
49-111	4.54
49-112	4.54
49-113	4.54
49-114	4.54
49-115	4.54
49-116	4.54
49-117	4.54
49-118	4.54
49-119	4.54
49-120	4.54
49-121	4.54
49-122	4.54
49-123	4.54
49-124	4.54
49-128	4.54
49-132	4.54
49-133	4.54
49-134	4.54
49-135	4.54
49-136	4.54
49-145	4.54
49-153	4.54
49-158	4.54
49-161	4.54
49-167	4.54
49-172	4.54
49-178	4.54
49-348	4.57
49-349	4.57
49-350	4.57
49-400	4.54
49-401	4.54
49-402	4.54
49-403	4.54
49-404	4.54
49-405	4.54
49-406	4.54
49-407	4.54
49-408	4.54
49-409	4.54
49-410	4.54
49-411	4.54
49-412	4.54
49-413	4.54
49-414	4.54
49-415	4.54
49-416	4.54
49-417	4.54
49-418	4.54
49-419	4.54
49-420	4.54
49-421	4.54
49-422	4.54
49-423	4.54
49-424	4.54
49-425	4.54
49-426	4.54
49-427	4.54
49-428	4.54
49-429	4.52
49-495	4.54
49-496	4.54
49-497	4.54
49-498	4.54
49-499	4.54
49-500	4.54
49-501	4.54
49-502	4.54
49-503	4.54
49-504	4.54
49-505	4.54
49-506	4.54
49-507	4.54
49-508	4.54
49-509	4.54
49-510	4.54
49-511	4.54
49-512	4.54
49-513	4.54
49-514	4.54
49-515	4.54
49-516	4.54
49-517	4.54
49-600	4.57
49-603	4.57
49-604	4.57
50-1	4.5
50-2	4.4
50-3	4.4
50-8	4.5
50-51	4.4
50-54	4.5
50-55	4.5
50-56	4.5
50-57	4.5
50-58	4.5
50-59	4.5
50-105	4.5
50-108	4.5
50-181	4.3
50-184	4.3
50-188	4.3
50-189	4.3
50-191	4.3
50-192	4.3
50-250	4.2
50-255	4.4
50-256	4.4
50-257	4.4
50-258	4.4
50-259	4.4
50-260	4.4
50-261	4.4
50-262	4.4
50-263	4.4
50-270	4.5
50-271	4.5
50-272	4.5
50-273	4.5
50-274	4.5
50-275	4.5
50-280	4.5
50-281	4.5
50-300	4.6
50-301	4.6
50-302	4.6
50-303	4.6
50-304	4.6
50-305	4.6
50-306	4.6
50-307	4.6
50-308	4.6
50-309	4.6
50-310	4.6
50-311	4.6
50-312	4.6
50-313	4.6
50-314	4.6
50-315	4.6
50-316	4.6
50-317	4.6
50-318	4.6
50-318	4.6
50-320	4.6
50-321	4.6
50-322	4.6
50-323	4.6
50-324	4.6
50-325	4.6
50-326	4.6
50-327	4.6
50-328	4.6
50-329	4.6
50-330	4.6
50-331	4.6
50-332	4.6
50-333	4.6
50-334	4.6
50-335	4.2
50-336	4.2

MIDWEST PART NO.	BOOK PAGE
50-337	4.2
50-338	4.2
50-339	4.2
50-340	4.2
50-341	4.2
50-342	4.2
50-343	4.2
50-344	4.2
50-345	4.2
50-346	4.2
50-347	4.8
50-348	4.8
50-349	4.8
50-350	4.8
50-351	4.8
50-352	4.8
50-353	4.8
50-354	4.8
50-355	4.8
50-356	4.8
50-357	4.8
50-358	4.8
50-359	4.8
50-360	4.8
50-361	4.8
50-362	4.8
50-363	4.8
50-364	4.8
50-365	4.8
50-366	4.8
50-367	4.8
50-368	4.8
52-256	7.67
52-257	7.67
52-258	7.67
52-259	7.67
52-260	7.67
52-261	7.67
52-262	7.67
52-264	7.67
52-265	7.67
52-266	7.67
52-268	7.67
52-269	7.67
52-270	7.67
52-272	7.67
52-273	7.67
52-274	7.67
52-276	7.67
52-277	7.67
52-278	7.67
52-280	7.67
52-281	7.67
53-12	9.10
53-13	9.10
53-14	9.13
53-15	9.13
53-16	9.10
53-20	9.11
53-21	9.11
53-29	9.14
53-40	9.16
53-44	9.16
53-49	9.4
53-50	9.4
53-51	9.15
53-52	1.33
53-53	1.35
53-54	1.33
53-56	1.35
53-128	1.33
53-129	1.34
53-130	1.34
53-134	1.45
53-144	1.37
53-151	9.11
53-157	1.45
53-161	1.37
53-185	1.37
53-186	1.33
53-193	1.37
53-194	1.36
53-195	1.36
53-196	4.51
53-207	9.4
53-208	9.4
53-209	9.4
53-210	9.4
53-211	9.4
53-219	1.35
53-226	9.7
53-227	9.7
53-228	9.8
53-229	9.8
53-230	9.14
53-232	9.7
53-233	9.7
53-234	9.7
53-235	9.7
53-236	9.9
53-237	8.15
53-238	8.15
53-239	9.7
53-242	9.10
53-244	9.10
53-245	9.10
53-246	9.4
53-247	1.45
53-251	1.33
53-252	1.37
53-253	1.37
53-256	1.37
53-257	9.15
53-258	9.15
53-259	9.8
53-260	9.8
53-264	1.35
53-265	1.45
53-270	9.12
53-271	9.12
53-284	1.44
53-286	1.44
53-287	1.45
53-288	1.44
53-289	1.44
53-294	1.44
53-295	1.46
53-296	1.34
53-297	9.14
53-298	1.37
53-300	1.33
53-302	1.35
53-303	1.35
53-304	1.35
53-306	1.35
53-308	1.35
53-309	1.35
53-310	1.35
53-311	1.37
53-312	9.16
53-315	9.14
53-316	9.14
53-317	9.14
53-319	1.33
53-320	1.33
53-321	1.45
53-322	1.35
53-324	1.37
53-325	1.45
53-341	1.34
53-345	1.34
53-346	1.34
53-368	1.45
53-384	9.10
53-385	9.10
53-388	9.10
53-389	9.5
53-390	9.5
53-392	9.16
53-393	9.16
53-394	9.16
53-395	9.16
53-396	9.16
53-397	9.16
53-398	9.16
53-399	9.5
53-400	9.5
53-401	9.5
53-404	9.5
53-406	9.19
53-407	1.45
53-417	9.17
53-418	9.10
53-419	9.5
53-420	9.5
53-425	9.13
53-426	8.14
53-427	9.9
53-430	9.14
53-431	9.14
53-432	9.14
53-434	9.14
53-435	9.14
53-436	9.14
53-437	9.14
53-438	9.14
53-439	9.14
53-440	9.14
53-450	9.15
53-451	9.15
53-452	9.15
53-453	9.15
53-454	9.15
53-455	9.15
53-456	1.44
53-457	1.44
53-470	8.14
53-471	8.15
53-472	8.15
53-480	9.14
53-481	9.14
53-482	9.14
53-483	9.14
53-500	9.8
53-501	9.8
53-505	1.45
53-520	9.6
53-521	9.6
53-522	9.6
53-528	9.10
53-529	9.10
53-530	9.14
53-541	1.35
53-542	1.35
53-543	1.35
53-544	1.35
53-545	1.35
53-546	1.35
53-547	1.35
53-548	1.35
53-549	1.35
53-550	1.35
53-551	1.35
53-552	1.35
53-553	1.35
53-559	1.35
53-561	1.35
53-562	1.35
53-563	1.35
53-564	1.35
53-565	1.35
53-568	1.35
53-569	1.35
53-570	1.35
53-571	1.35
53-572	1.35
53-573	1.35
53-574	1.35
53-575	1.35
53-576	1.35
53-578	1.35
53-580	1.35
53-581	1.35
53-582	1.35
53-584	1.35
53-585	1.35
53-586	1.35
53-587	1.35
53-588	1.35
53-591	9.17
53-597	9.6
53-598	9.6
53-603	1.33
53-604	1.33
53-605	1.33
53-606	1.33
53-607	1.34
53-608	1.34
53-609	1.34
53-610	1.34
53-611	1.34
53-612	1.34
53-613	1.34
53-614	1.34
53-615	1.33
53-617	1.33
53-625	9.3
53-626	9.3
53-630	1.33
53-631	1.33
53-632	9.15
53-638	9.4
53-639	9.4
53-640	9.4
53-642	9.6
53-644K	9.2
53-644	9.2
53-647	9.17
53-648	9.17
53-650	9.11
53-651	1.52
53-652	1.52
53-653	1.52
53-654	1.52
53-655	1.52
53-656	1.52
53-658	9.5
53-659	9.5
53-660	9.2
53-662	9.2
53-676	1.33
53-678	1.33
53-679	1.33
53-685	8.13
53-686	8.13
53-690	9.6
53-691	9.6
53-695	1.45
53-701	9.6
53-710	9.17
53-711	9.17
53-720	1.33
53-721	1.33
53-722	1.33
53-723	1.33
55-7	11.9
55-8	11.9
55-9	11.9
57-1	4.50
57-4	8.52
57-11	8.52
57-20	8.52
57-21	8.52
57-71	4.51
57-77	4.52
57-78	4.52
57-82	4.51
57-87	8.53
57-88	4.51
57-89	4.51
57-90	4.49
57-91	4.49
57-92	4.51
57-94	4.51
57-95	4.49
57-96	4.51
57-99	4.50
57-100	4.50
57-101	4.52
57-102	8.53
57-103	4.52
57-122	4.49
57-123	4.49
57-124	4.49
57-125	4.49
57-126	4.49
57-127	4.49
57-130	4.50
57-131	4.50
57-136	4.52
57-167	4.49
57-168	4.49
57-186	4.52
57-192	4.50
57-212	4.53
57-213	4.53
57-214	4.53
57-215	4.53
57-216	4.53
57-217	4.53
57-265	4.51
57-284	4.51
57-336	4.49
57-337	4.49
58-110	7.80
58-111	7.80
58-139	7.79
58-180	2.5
58-267	7.62
58-284	7.62
58-285	7.62
58-304	7.79
58-312	7.54
58-314	7.54
58-380	2.5
58-381	2.5
58-382	2.5
58-383	2.5
58-384	2.5
58-385	2.5
58-386	2.5
58-394	7.54
58-410	7.81
58-411	7.81
58-412	7.81
58-413	7.81
58-414	7.81
58-415	7.81
58-416	7.81
58-417	7.81
58-418	7.81
58-419	7.81
58-420	7.81
58-421	7.81
58-430	7.81
58-433	7.81
58-437	7.81
58-439	7.81
58-440	7.62
58-538	7.79
58-580	2.5
58-581	2.5
58-582	2.5
58-583	2.5
58-584	2.5
58-585	2.5
58-586	2.5
58-587	2.5
58-588	2.5
58-605	7.69
58-606	7.69
58-607	7.69
58-608	7.69
58-609	7.69
58-610	7.69
58-611	7.69
58-612	7.69
58-613	7.69
58-622	7.68
58-633	7.69
58-634	7.79
58-650	7.73
58-651	7.73
58-652	7.73
58-653	7.73
58-654	7.73
58-655	7.73
58-656	7.73
58-657	7.70
58-658	7.70
58-659	7.70
58-660	7.70
58-661	7.70
58-662	7.70
58-663	7.70
58-664	7.70
58-665	7.70
58-666	7.70
58-667	7.68
58-668	7.68
58-669	7.68
58-670	7.68
58-671	7.68
58-672	7.68
58-673	7.68
58-700	7.71
58-707	7.68
58-708	7.68
58-710	7.69
58-711	7.69
58-712	7.69
58-713	7.69
58-714	7.69
58-715	7.72
58-717	7.72
58-718	7.69
58-719	7.69
58-720	7.69
58-723	7.69
58-724	7.69
58-725	7.72
58-726	7.69
58-727	7.72
58-728	7.72
58-729	7.72
58-730	7.71
58-733	7.72
58-735	7.69
58-736	7.68
58-737	7.68
58-738	7.68
58-739	7.68
58-741	7.68
58-752	7.69
58-755	7.72
58-756	7.68
58-757	7.68
58-760	7.72
58-761	7.69
58-765	7.73
58-767	7.73
58-769	7.54
58-770	7.72
58-771	7.72
58-772	7.68
58-773	7.68
58-774	7.68
58-775	7.73
58-776	7.72
58-777	7.72
58-778	7.72
58-779	7.68
58-780	7.69
58-781	7.69
58-782	7.69
58-786	7.73
58-787	7.73
58-790	7.73
58-793	7.73
58-794	7.73
58-795	7.73
58-796	7.69
58-797	7.69
58-798	7.68
58-799	7.69
58-800	7.71
58-809	7.70
58-812	7.73
58-813	7.73
58-814	7.73
58-815	7.73
58-819	7.54
58-821	7.70
58-824	7.69
58-825	7.69
58-826	7.69
58-827	7.69
58-828	7.69
58-829	7.69
58-830	7.70
58-832	7.69
58-833	7.68
58-834	7.69
58-835	7.68
58-843	7.54
58-844	7.54
58-850	7.69
58-852	7.68
58-853	7.70
58-854	7.70
58-855	7.70
58-856	7.70
58-857	7.70
58-858	7.70
58-859	7.70
58-860	7.70
58-861	7.70
58-862	7.70
58-863	7.70
58-864	7.70
58-865	7.70
58-866	7.70
58-867	7.69
58-871	7.78
58-873	7.78
58-876	7.78
58-878	7.79
58-880	7.79
58-881	7.79

MIDWEST PART NO.	BOOK PAGE
58-890	7.70
58-891	7.70
58-892	7.70
58-893	7.70
58-894	7.70
58-900	7.74
58-901	7.69
58-902	7.74
58-903	7.73
58-904	7.74
58-906	7.78
58-907	7.78
58-908	7.78
58-909	7.78
58-916	7.73
58-917	7.73
58-918	7.70
58-919	7.75
58-920	7.74
58-921	7.74
58-922	7.72
58-923	7.69
58-924	7.72
58-925	7.68
58-926	7.75
58-927	7.76
58-928	7.75
58-929	7.75
58-930	7.75
58-935	7.72
58-936	7.78
58-937	7.79
58-940	7.69
58-941	7.69
58-942	7.72
58-943	7.69
58-944	7.69
58-945	7.69
58-946	7.71
58-947	7.71
58-949	7.72
58-950	7.73
58-951	7.73
58-958	7.70
58-960	7.68
58-963	7.68
58-964	7.68
58-970	7.68
58-971	7.68
58-972	7.68
58-973	7.68
58-975	7.68
58-976	7.68
58-977	7.68
58-980	7.68
58-981	7.68
58-982	7.68
58-983	7.68
58-984	7.68
58-985	7.68
58-986	7.68
58-987	7.68
58-990	7.68
60-100	10.6
60-101	10.6
60-102	10.6
60-103	10.6
60-104	10.6
60-105	10.6
60-200	10.11
60-203	10.11
60-204	10.11
60-205	10.11
60-206	10.11
60-207	10.11
60-208	10.11
60-209	10.11
60-210	10.11
60-211	10.12
60-212	10.12
60-213	10.12
60-214	10.12
60-217	10.12
60-218	10.12
60-219	10.12
60-300	10.2
60-301	10.2
60-302	10.2
60-303	10.2
60-304	10.2
60-305	10.2
60-306	10.3
60-307	10.3
60-308	10.3
60-309	10.3
60-310	10.3
60-311	10.3
60-312	10.3
60-360	10.4
60-361	10.4
60-362	10.5
60-363	10.5
60-364	10.5
60-365	10.5
60-366	10.6
60-367	10.6
60-368	10.6
60-369	10.6
60-370	10.4
60-371	10.4
60-372	10.7
60-373	10.7
60-374	10.7
60-375	10.7
61-1	11.10
62-616	10.10
62-623	10.10
62-626	10.10
62-632	10.10
63-67	7.67
64-3	10.14
64-45	10.15
64-47	10.15
64-48	10.15
64-100	10.15
64-101	10.15
64-102	10.15
64-103	10.15
64-104	10.15
64-105	10.15
64-110	10.17
64-111	10.17
64-112	10.17
64-113	10.17
64-114	10.17
64-115	10.17
64-150	10.13
64-151	10.13
64-152	10.13
64-153	10.13
64-154	10.13
64-155	10.13
64-156	10.13
64-157	10.13
64-158	10.13
64-190	10.15
64-300	10.14
64-310	10.9
64-311	10.9
64-312	10.9
64-313	10.9
64-319	10.14
64-339	10.14
64-368	10.14
64-369	10.10
64-373	10.14
64-390	10.8
64-391	10.8
64-392	10.8
64-393	10.8
64-394	10.8
64-395	10.8
64-477	10.17
64-478	10.17
64-479	10.17
65-108	10.14
66-10	10.15
66-14	10.15
66-15	10.15
66-16	10.15
66-17	10.15
66-18	10.15
66-42	10.15
66-45	8.32
66-48	10.15
66-49	10.15
66-61	10.15
66-65	4.43
66-66	4.43
66-76	5.38
66-84	8.32
66-94	4.40
66-96	10.16
66-98	8.32
66-99	8.32
66-100	10.16
66-101	10.17
66-102	10.16
66-110	10.17
66-203	10.16
66-204	12.15
66-205	12.15
66-206	12.15
66-207	12.15
66-208	12.15
66-209	12.15
66-210	4.61
66-211	4.61
66-212	4.61
66-213	4.43
66-214	4.43
66-215	4.43
66-216	4.43
66-242	6.30
66-290	10.16
66-291	10.17
66-292	10.17
66-293	10.17
67-75	7.67
68-100	11.5
68-116	11.5
68-150	11.5
68-151	11.5
68-152	11.5
69-001	8.25
69-65	8.31
69-90	8.33
69-91	8.23
69-94	8.17
69-96	8.17
69-125	8.17
69-141	8.17
69-142	8.17
69-144	8.17
69-184A	8.23
69-190P	8.23
69-190A	8.23
69-194P	8.23
69-196A	8.23
69-198A	8.23
69-203A	8.23
69-204A	8.23
69-205A	8.23
69-210A	8.23
69-212A	8.23
69-216A	8.23
69-217A	8.23
69-241	8.17
69-242	8.17
70-109	1.46
70-110	1.46
70-111	1.46
70-120	9.9
70-123	9.9
70-130	1.43
70-131	1.43
70-133	1.43
70-134	1.43
70-135	1.43
70-138	1.43
70-139	1.43
70-142	1.43
70-143	1.43
70-144	1.43
70-145	1.43
70-181	1.45
70-182	1.45
70-184	1.44
70-201	1.40
70-203	1.40
70-204	1.40
70-205	1.40
70-206	1.40
70-207	1.40
70-208	1.40
70-209	1.45
70-210	1.45
70-211	1.45
70-212	1.40
70-213	1.40
70-214	1.40
70-215	1.40
70-217	1.40
70-218	1.38
70-219	1.38
70-220	1.38
70-221	1.38
70-222	1.38
70-223	1.38
70-224	1.38
70-225	1.38
70-226	1.38
70-227	1.38
70-228	1.38
70-229	1.38
70-230	1.42
70-231	1.42
70-233	1.42
70-234	1.42
70-235	1.39
70-236	1.39
70-237	1.39
70-238	1.39
70-239	1.39
70-240	1.39
70-247	1.41
70-248	1.41
70-249	1.41
70-250	1.40
70-251	1.40
70-252	1.40
70-253	1.40
70-255	1.40
70-256	1.40
70-257	1.41
70-258	1.40
70-259	1.40
70-260	1.40
70-262	1.40
70-263	1.40
70-264	1.40
70-265	1.40
70-266	1.40
70-267	1.41
70-268	1.40
70-269	1.40
70-270	1.40
70-271	1.40
70-272	1.41
70-273	1.41
70-274	1.40
70-275	1.41
70-276	1.41
70-277	1.41
70-278	1.41
70-279	1.41
70-280	1.41
70-281	1.41
70-282	1.41
70-283	1.40
70-284	1.41
70-285	1.41
70-286	1.41
70-287	1.41
70-288	1.41
70-289	1.41
70-290	1.40
70-291	1.41
70-292	1.41
70-293	1.41
70-294	1.41
70-295	1.41
70-296	1.41
70-297	1.41
70-298	1.41
70-299	1.41
70-300	1.41
70-301	1.41
70-302	1.41
70-303	1.41
70-304	1.41
70-305	1.41
70-306	1.41
70-307	1.40
70-310	1.45
70-330	1.43
70-331	1.44
70-332	1.44
71-100	8.16
71-101	8.16
71-102	8.16
71-103	8.16
71-104	8.16
71-105	8.16
71-124	8.45
71-131	8.45
71-137	8.46
71-138	8.46
71-139	8.46
71-140	8.46
71-141	8.46
71-142	8.46
71-143	8.46
71-144	8.46
71-145	8.46
71-146	8.46
71-147	8.45
71-176	8.16
71-178	8.16
71-179	8.16
71-180	8.16
71-181	8.45
71-182	8.45
71-183	8.45
71-184	8.45
71-185	8.45
71-186	8.45
71-187	8.45
71-188	8.45
71-189	8.45
71-190	8.45
71-191	8.45
71-192	8.45
71-193	8.45
71-194	8.45
71-195	8.45
73-33	8.51
73-34	8.51
73-55	8.52
73-59	8.51
74-49	11.7
74-51	11.7
74-53	11.7
74-57	11.7
74-59	11.7
74-66	11.8
74-402	11.8
74-425	11.8
74-426	11.8
76-740	11.2
76-741	11.2
76-742	11.2
76-743	11.2
76-745	11.2
76-746	11.2
76-891	11.2
76-892	11.2
76-893	11.2
76-928	11.2
76-929	11.2
76-932	11.2
76-933	11.2
77-109	6.18
77-110	6.21
77-111	6.18
77-113	1.36
77-170	7.34
77-300	6.107
77-301	6.107
77-302	6.107
77-304	6.107
77-305	6.107
77-306	6.107
77-307	6.107
77-308	6.111
77-309	6.111
77-310	6.111
77-311	6.111
77-312	6.111
77-313	6.111
77-316	6.111
77-317	6.111
77-318	6.112
77-319	6.112
77-320	6.113
77-321	6.113
77-322	6.113
77-323	6.113
77-324	6.113
77-325	6.113
77-326	6.113
77-327	6.113
77-328	6.113
77-329	6.113
77-330	6.109
77-331	6.109
77-332	6.109
77-333	6.109
77-334	6.109
77-335	6.109
77-336	6.107
77-337	6.107
77-338	6.107
77-339	6.107
77-340	6.107
77-341	6.107
77-342	6.112
77-343	6.112
77-344	6.112
77-345	6.112
77-346	6.112
77-347	6.109
77-348	6.109
77-349	7.37
77-350	7.37
77-351	7.37
77-352	7.37
77-353	7.37
77-354	7.37
77-395	6.105
77-396	6.105
77-397	6.105
77-398	6.105
77-399	7.37
77-400	7.37
77-402	6.107
77-403	6.107
77-405	6.107
77-406	6.107
77-407	6.107
77-408	6.107
77-409	6.107
77-410	6.107
77-411	6.107
77-412	6.107
77-413	6.18
77-414	6.18
77-415	6.111
77-416	6.111
77-417	6.111
77-418	6.111
77-419	6.111
77-420	6.111
77-421	6.111
77-422	6.111
77-423	6.111
77-424	6.111
77-425	6.111
77-426	6.111
77-427	6.111
77-428	6.111
77-429	6.111
77-430	6.111
77-431	6.111
77-432	6.105
77-433	6.105
77-434	6.105
77-435	6.105
77-436	6.21
77-438	6.21
77-439	6.21
77-440	6.21
77-441	6.21
77-442	6.21
77-443	6.18
77-444	6.21
77-445	6.21
77-446	6.38
77-447	6.105
77-448	6.105
77-449	6.105
77-450	6.105
77-451	6.105
77-452	6.105
77-453	6.107
77-454	6.107
77-455	6.107
77-456	6.108
77-457	6.108

MIDWEST PART NO.	BOOK PAGE
77-458	6.108
77-459	6.109
77-460	6.111
77-461	6.111
77-462	6.111
77-463	6.111
77-464	6.111
77-465	6.111
77-466	6.111
77-467	6.111
77-470	6.21
77-471	6.21
77-475	6.20
77-476	6.20
77-477	6.20
77-480	6.105
77-481	6.105
77-482	7.37
77-483	7.37
77-484	7.37
77-485	6.105
77-486	6.105
77-487	6.105
77-488	6.111
77-489	6.111
77-592	6.115
77-650	6.104
77-700	6.101
77-701	6.101
77-702	6.101
77-703	6.102
77-704	6.102
77-705	6.101
77-706	6.101
77-707	6.101
77-708	6.101
77-709	6.101
77-710	6.101
77-711	6.101
77-712	6.102
77-713	6.102
77-714	6.103
77-715	6.21
77-716	6.103
77-717	6.103
77-718	6.103
77-719	6.103
77-720	6.76
77-721	6.103
77-722	6.103
77-723	7.91
77-724	7.91
77-725	7.91
77-726	8.55
77-727	7.90
77-728	7.90
77-729	7.90
77-730	7.90
77-731	7.90
77-732	7.90
77-733	7.90
77-734	7.90
77-735	7.90
77-736	7.90
77-737	7.90
77-738	7.90
77-739	7.90
77-740	7.90
77-741	7.90
77-742	7.90
77-743	7.90
77-744	7.90
77-745	7.90
77-746	7.90
77-747	7.90
77-748	7.90
77-750	6.101
77-751	6.103
77-752	6.103
77-753	6.103
77-754	6.103
77-755	6.102
77-756	6.102
77-758	6.102
77-759	6.102
77-760	6.102
77-761	6.102
77-762	6.102
77-763	6.102
77-764	6.102
77-765	6.102
77-766	6.102
77-767	6.102
77-768	6.102
77-769	6.102
77-770	6.102
77-771	6.102
77-772	6.102
77-773	6.102
77-774	6.102
77-775	6.102
77-776	6.102
77-777	6.102
77-778	6.102
77-779	6.102
77-780	6.101
77-781	6.101
77-782	6.101
77-783	6.101
77-784	6.102
77-785	6.101
77-786	8.55
77-787	7.90
77-788	7.90
77-789	6.102
77-790	7.90
77-791	6.103
77-792	6.101
77-793	6.101
77-794	6.101
77-795	6.101
77-796	6.101
77-797	6.101
77-798	6.101
77-799	6.101
77-800	6.101
77-801	6.101
77-802	6.102
77-803	6.102
77-804	8.55
77-805	8.55
77-806	8.55
77-807	8.55
77-808	8.55
77-809	8.55
77-810	8.55
77-811	8.55
77-812	7.90
77-813	6.103
77-814	6.103
77-815	6.103
77-816	6.103
77-817	6.103
77-818	6.103
77-819	6.103
77-820	6.103
77-821	8.54
77-822	8.54
77-823	8.54
77-824	8.54
77-825	6.103
77-826	6.103
77-827	6.101
77-828	6.101
77-829	6.101
77-830	6.101
77-831	7.91
77-832	7.91
77-833	7.91
77-834	7.91
77-835	7.90
77-836	7.90
77-837	7.91
77-838	7.91
77-839	7.91
77-840	7.91
77-841	7.91
77-842	7.91
77-843	7.91
77-844	7.91
77-845	7.91
77-855	7.91
77-856	6.102
77-857	6.102
77-858	6.100
77-859	6.100
77-860	6.100
77-861	6.100
77-862	6.100
77-863	6.100
77-864	6.100
77-865	6.100
77-866	6.100
77-867	6.100
77-868	6.100
77-869	6.100
77-870	6.100
77-871	6.100
77-872	6.100
77-873	6.100
77-874	6.100
77-875	6.100
77-876	6.100
77-878	6.101
77-879	6.101
77-881	6.101
77-882	6.101
77-883	6.101
77-884	7.91
77-885	6.103
77-886	6.102
77-887	6.102
77-888	6.103
77-889	6.103
77-890	6.102
77-891	7.91
77-892	8.55
77-893	8.55
77-894	6.101
77-895	7.91
77-896	7.90
77-897	7.91
77-898	7.91
77-899	7.91
77-900	7.91
77-901	6.102
77-902	8.55
77-903	7.91
77-904	6.103
77-905	6.102
77-906	6.102
77-907	6.102
77-908	6.102
77-909	12.10
77-910	6.79
77-911	6.79
77-920	8.11
77-921	8.11
77-922	8.11
77-923	8.11
77-924	8.11
77-925	8.11
77-926	8.11
77-927	8.11
77-928	7.96
77-930	6.101
77-931	6.101
77-932	6.101
77-933	6.101
77-934	6.101
77-935	6.101
77-936	6.101
77-937	6.101
77-938	6.101
78-1	1.4
78-3	1.4
78-4	6.37
78-5	6.37
78-33	6.62
78-41	6.70
78-46	7.37
78-47	7.40
78-48	6.70
78-51	6.62
78-61	6.64
78-62	6.59
78-63	6.70
78-95	7.38
78-100	8.6
78-111	8.25
78-112	8.19
78-113	8.19
78-143	10.16
78-146	6.62
78-148	6.108
78-149	1.54
78-151	8.35
78-155	1.46
78-169	1.22
78-173	1.4
78-182	4.29
78-187	4.30
78-200	4.29
78-205	6.66
78-206	6.106
78-210	8.33
78-217	1.4
78-240	6.66
78-243	6.70
78-246	6.104
78-247	6.104
78-248	6.104
78-249	6.104
78-250	6.104
78-251	6.104
78-252	6.104
78-253	6.104
78-254	6.108
78-255	6.104
78-256	6.104
78-257	6.104
78-258	6.104
78-259	6.106
78-260	6.106
78-261	6.104
78-262	6.104
78-300	6.104
78-320	6.66
78-321	6.66
78-322	1.4
78-350	6.68
78-352	6.66
78-353	6.66
78-355	6.116
78-356	6.66
78-357	6.66
78-358	6.112
78-359	6.112
78-360	6.112
78-361	6.112
78-362	6.108
78-363	6.108
78-364	6.108
78-365	6.108
78-366	6.66
78-367	6.109
78-368	6.109
78-369	6.109
78-370	6.62
78-371	6.116
78-372	6.116
78-373	6.108
78-374	6.108
78-375	6.116
78-377	6.87
78-378	6.104
78-379	6.104
78-380	6.96
78-381	6.96
78-382	6.104
78-383	7.92
78-384	6.110
78-385	6.98
78-386	6.116
78-387	6.110
78-388	6.114
78-389	6.98
78-390	6.98
78-391	6.98
78-392	6.110
78-393	6.98
78-394	6.98
78-395	6.35
78-395A	6.35
78-396A	6.35
78-396	6.35
78-397	6.35
78-397A	6.35
78-398	6.35
78-398A	6.35
78-399	6.113
78-400	6.113
78-401	6.108
78-402	8.54
78-403	8.54
78-405	6.106
78-408	8.27
78-410	8.54
78-411	8.54
78-412	9.11
78-413	1.54
78-415	1.54
78-416	1.54
78-417	1.54
78-418	1.54
78-419	1.54
78-420	6.114
78-421	6.110
78-422	6.108
78-423	7.94
78-425	7.92
78-427	7.92
78-428	7.38
78-429	7.38
78-430	7.92
78-431	7.92
78-432	7.82
78-433	7.82
78-434	7.92
78-435	7.92
78-436	7.51
78-437	7.92
78-438	7.83
78-439	1.54
78-440	7.93
78-441	7.92
78-442	7.83
78-443	13.5
78-444	6.66
78-445	10.16
78-446	10.18
78-447	7.32
78-448	7.38
78-449	1.54
78-450	1.54
78-451	1.54
78-452A	7.30
78-452	7.30
78-453	7.30
78-454	7.30
78-455A	7.12
78-455	7.12
78-456	7.95
78-457	7.95
78-458	7.95
78-459	7.95
78-460	7.95
78-461	7.4
78-461A	7.4
78-462	7.45
78-463	7.38
78-464	7.37
78-465	7.37
78-466	7.37
78-467	6.115
78-468	6.115
78-469	6.115
78-470	6.115
78-471	6.115
78-472	6.115
78-473	6.115
78-474	6.115
78-475	6.115
78-476	6.115
78-477	6.115
78-478	6.115
78-479	6.115
78-480	6.115
78-481	6.115
78-482	6.115
78-483	6.115
78-484	6.115
78-485	6.115
78-486	6.115
78-487	6.115
78-488	6.115
78-489	6.115
78-495	7.92
78-497	7.92
78-498	7.92
78-500	7.92
78-501	6.104
78-502	6.104
78-503	7.92
78-504	6.104
78-508	6.106
78-509	6.106
78-510	6.104
78-512	7.92
78-515	7.92
78-522	7.92
78-523	6.104
78-524	7.92
78-525	6.104
78-526	7.92
78-527	6.96
78-528	7.27
78-530	6.106
78-531	6.106
78-532	6.106
78-533	6.106
78-534	6.106
78-535	6.106
78-537	6.106
78-538	6.106
78-539	6.106
78-540	6.106
78-541	7.92
78-542	7.92
78-543	6.104
78-544	8.54
78-545	8.54
78-546	8.54
78-547	8.54
78-548	6.108
78-549	6.108
78-550	6.108
78-551	6.108
78-552	6.108
78-553	6.108
78-554	6.108
78-555	6.108
78-556	6.108
78-557	6.108
78-558	6.108
78-559	6.108
78-560	6.108
78-561	6.108
78-562	6.108
78-563	6.108
78-564	6.108
78-565	7.93
78-566	1.54
78-567	7.92
78-568	7.92
78-569	7.92
78-570	7.92
78-571	7.92
78-573	7.92
78-574	7.92
78-579	7.92
78-580	7.92
78-581	6.104
78-582	6.104
78-583	6.104
78-584	6.104
78-585	6.104
78-586	6.104
78-587	6.104
78-588	6.104
78-594	6.104
78-595	6.104
78-596	6.104
78-597	6.104
78-600	8.19
78-601	7.91
78-608	6.104
78-609	6.104
78-610	6.104
78-611	6.104
78-612	6.104
78-613	6.104
78-618	6.105
78-619	6.105
78-620	6.105
78-621	6.105
78-622	6.105
78-623	6.105
78-624	6.109
78-625	6.109
78-626	6.109
78-627	6.109
78-628	6.109
78-629	6.109
78-630	6.109
78-631	6.109
78-632	6.109
78-633	6.109
78-634	6.110

MIDWEST PART NO.	BOOK PAGE
78-635	6.110
78-636	6.110
78-637	6.110
78-638	6.110
78-639	6.110
78-640	6.110
78-641	6.110
78-642	6.110
78-643	6.110
78-644	6.110
78-645	6.110
78-646	6.110
78-647	6.110
78-648	6.111
78-649	6.111
78-650	6.111
78-651	6.111
78-652	6.112
78-653	6.112
78-654	6.112
78-655	6.112
78-656	6.112
78-657	6.112
78-658	6.112
78-659	6.112
78-660	7.94
78-661	6.113
78-662	6.114
78-663	6.114
78-664	6.114
78-665	6.114
78-667	7.95
78-670	6.21
78-671	6.21
78-673	6.21
78-674	6.21
78-675	6.21
78-678	6.21
78-680	6.21
78-681	6.21
78-682	6.21
78-683	6.21
78-685	6.21
78-686	6.21
78-700	6.21
78-702	6.21
78-703	6.21
78-710	6.21
78-711	6.21
78-712	6.21
78-713	6.21
78-800	7.90
78-801	7.90
78-802	7.90
78-803	6.100
78-804	6.100
78-805	6.100
78-806	6.100
78-807	6.100
79-10	8.10
79-11	8.10
79-12	8.10
79-13	8.10
79-14	8.10
82-1	11.4
82-2	11.4
82-7	11.4
82-12	11.4
82-16	11.4
82-53	11.3
82-54	11.3
82-55	11.3
82-67	11.4
82-71	11.4
82-72	11.4
82-73	11.4
82-74	11.4
82-75	11.4
82-76	11.4
82-78	11.4
82-80	11.4
83-7	2.6
83-8	2.6
83-9	2.6
83-10	5.38
83-11	2.6
83-19	2.7
83-20	2.7
83-21	2.4
83-22	2.7
83-23	2.4
83-24	2.7
83-25	2.4
83-26	2.7
83-45	2.7
83-61	2.6
83-68	2.4
83-69	2.4
83-74	2.4
83-75	2.4
83-99	2.8
85-101	2.2
85-101A	2.2
85-180	2.3
85-181	2.3
85-182A	2.3
85-182	2.3
85-183	2.2
85-183A	2.2
85-187	2.3
85-408	2.2
85-408A	2.2
86-34	1.21
86-41	1.21
86-42	1.22
86-45	1.19
86-47	4.53
86-49	4.52
86-50	1.31
86-53	1.27
86-55	1.27
86-69	1.13
86-70	1.15
86-71	1.18
86-72	1.21
86-79	1.22
86-83	1.31
86-84	1.31
86-85	1.32
86-87	1.31
86-88	1.32
86-91	1.31
86-92	1.31
86-93	1.31
86-98	1.18
86-99	4.53
86-102	4.53
86-103	1.14
86-104	1.14
86-116	1.28
86-119	4.53
86-120	1.31
86-121	1.32
86-122	1.28
86-123	1.29
86-124	1.29
86-125	1.29
86-130	1.22
86-131	1.22
86-132	1.22
86-133	1.22
86-134	1.22
86-135	1.22
86-136	1.22
86-137	1.21
86-150	1.22
86-151	1.22
86-152	1.22
86-153	1.22
86-154	1.22
86-155	1.19
86-160	1.27
86-161	1.27
86-162	1.27
86-163	1.27
87-10	2.20
87-11	2.20
87-12	2.20
87-50	2.20
87-51	2.20
87-120	2.21
87-121	2.21
88-15	7.85
88-16	7.85
88-17	7.85
88-18	7.85
88-49	7.86
88-50	7.85
88-52	7.86
88-53	6.78
88-54	7.85
88-55	6.78
88-57	7.85
88-58	7.82
88-59	7.86
88-60	7.85
88-61	7.85
88-62	7.85
88-64	7.85
88-66	7.86
88-70	6.78
88-77	7.86
88-80	7.86
88-82	7.86
88-90	6.78
88-91	6.78
88-93	7.85
88-97	2.6
88-110	6.11
88-115	7.86
88-116	7.86
88-143	7.85
88-145	7.85
88-146	7.86
88-151	7.86
88-152	7.86
88-153	7.86
88-154	7.86
89-1	1.44
89-3	1.4
89-4	1.36
89-8	1.44
89-10	1.36
89-11	8.50
89-13	7.87
89-14	8.51
89-21	7.87
89-22	1.5
89-32	1.36
89-35	1.5
89-36	1.4
89-46	1.45
89-47	9.19
89-59	6.44
89-60	6.44
89-61	6.44
89-62	6.44
89-63	6.44
89-70	9.18
89-71	9.18
89-73	6.62
89-75	6.44
89-76	6.44
89-83	1.15
89-84	1.15
89-90	7.88
89-91	4.53
89-100	7.88
89-101	7.88
89-107	1.15
89-110	4.52
89-111	4.52
89-112	7.87
89-113	6.44
89-114	9.18
89-116	8.11
89-119	1.5
89-120	1.5
89-123	1.29
89-127	7.87
89-128	9.18
89-129	4.53
89-133	6.44
89-134	6.44
89-135	6.44
89-143	1.5
89-145	8.11
89-149	4.52
89-162	2.16
89-163	2.16
89-166	7.45
89-169	8.11
89-181	1.5
89-183	7.88
89-191	8.11
89-201	4.30
89-202	4.34
89-213	4.22
89-214	7.40
89-215	7.40
89-230	1.5
89-233	4.52
89-237	1.45
89-238	6.98
89-242	13.14
89-252	8.42
89-255	1.5
89-257	1.15
89-258	4.9
89-259	7.87
89-278	3.21
89-280	1.44
89-281	4.53
89-301	9.19
89-302	9.19
89-304	9.18
89-307	9.17
89-320	13.14
89-330	6.38
89-331	6.38
89-332	6.38
89-335	6.38
89-336	6.38
89-339	2.6
89-340	8.12
89-341	2.7
89-344	6.39
89-348	1.15
89-349	3.21
89-351	6.39
89-353	4.49
89-354	4.49
89-360	2.16
89-361	2.16
89-365	6.44
89-366	6.78
89-368	6.78
89-370	8.12
89-373	6.39
89-374	6.39
89-375	6.39
89-381	1.34
89-389	6.39
89-395	6.49
89-397	1.22
89-398	8.12
89-399	9.18
89-402	9.23
89-414	1.47
89-415	4.53
89-416	6.39
89-436	6.32
89-450	6.39
89-457	6.49
89-458	4.49
89-470	4.53
89-492	9.18
89-496	6.38
89-497	9.18
89-498	7.88
89-501	1.5
89-516	6.31
89-518	6.32
89-519	6.32
89-525	1.34
89-526	1.34
89-527	1.34
89-528	9.18
89-535	13.13
89-536	13.13
89-537	1.34
89-538	6.31
89-540	6.32
89-541	6.32
89-542	6.32
89-543	6.32
89-544	6.32
89-545	6.32
89-610	4.53
89-699	6.38
90-10	5.40
90-11	5.40
90-12	5.40
90-13	5.40
90-14	5.40
90-15	5.40
90-17	5.40
90-18	5.40
90-20	5.40
90-22	5.40
90-23	5.40
90-24	5.40
90-25	5.40
90-26	5.40
90-27	5.40
90-28	5.40
90-29	5.41
90-30	5.41
90-31	5.41
90-32	5.41
90-33	5.41
90-34	5.41
90-36	5.41
90-38	5.41
90-39	5.41
90-41	5.41
90-42	5.41
90-43	5.41
90-44	5.41
90-48	5.41
90-49	5.41
90-50	4.26
90-52	5.41
90-53	5.36
90-58	4.27
90-64	5.37
90-68	4.33
90-70	5.39
90-84	5.27
90-85	5.27
90-86	5.39
90-88	5.36
90-89	5.39
90-90	5.36
90-92	5.39
90-99	5.45
90-100	5.39
90-106	5.39
90-107	4.30
90-126	5.37
90-127	5.34
90-128	5.38
90-129	5.38
90-130	5.38
90-151	4.27
90-152	4.27
90-153	4.26
90-155	4.26
90-156	4.26
90-157	4.26
90-158	4.26
90-163	5.39
90-165	4.29
90-166	4.30
90-167	4.30
90-170	4.30
90-180	5.37
90-182	5.37
90-183	5.39
90-184	4.35
90-196	4.26
90-197	4.26
90-198	5.37
90-199	5.37
90-200	5.37
90-201	5.45
90-202	4.26
90-204	5.19
90-205	5.19
90-206	5.19
90-207	5.19
90-208	4.26
90-212	5.35
90-213	5.35
90-214	5.35
90-216	5.35
90-217	5.35
90-219	5.35
90-220	5.35
90-221	5.35
90-222	5.35
90-224	4.29
90-226	5.19
90-227	5.19
90-228	5.19
90-229	5.19
90-231	5.38
90-232	4.22
90-234	5.34
90-238	5.35
90-240	4.27
90-244	5.38
90-246	5.38
90-250	5.36
90-251	5.36
90-252	5.36
90-253	5.36
90-255	5.36
90-256	5.36
90-258	5.36
90-259	5.36
90-260	5.36
90-262	4.59
90-263	4.59
90-264	4.59
90-278	5.19
90-280	5.38
90-281	5.34
90-288	5.34
90-291	5.34
90-293	4.26
90-300	5.38
90-301	5.32
90-302	5.34
90-305	4.58
90-328	5.45
90-329	4.29
90-330	5.35
90-331	5.35
90-332	5.35
90-345	4.58
90-346	5.34
90-347	4.59
90-348	4.59
90-349	4.59
90-350	4.59
90-351	4.33
90-352	4.59
90-354	5.37
90-355	5.37
90-356	5.35
90-357	5.45
90-358	5.45
90-360	5.34
90-365	5.19
90-367	5.28
90-368	5.28
90-369	5.34
90-377	4.58
90-378	4.28
90-387	4.36
90-390	4.58
90-408	5.38
90-409	4.29
90-410	4.33
90-413	4.27
90-421	4.35
90-424	4.27
90-425	4.29
90-426	4.27
90-429	4.27
90-430	4.27
90-431	4.58
90-434	5.32
90-435	4.29
90-436	5.32
90-437	5.32
90-438	5.35
90-439	5.38
90-445	5.35
90-446	4.59
90-447	4.59
90-448	4.59
90-451	5.45
90-452	5.45
90-453	5.45
90-454	5.45
90-455	5.45
90-456	5.45
90-457	5.45
90-458	5.45
90-522	4.28
90-523	4.28
90-524	4.27
90-525	4.27
90-561	5.32
90-562	5.32
90-566	5.32
90-570	5.34

MIDWEST PART NO.	BOOK PAGE
90-580	5.20
90-582	5.20
90-583	5.20
90-585	5.20
90-586	5.20
90-589	5.20
90-605	5.19
90-606	5.19
90-607	5.19
90-608	5.19
90-609	5.19
90-610	5.8
90-613	5.8
90-615	5.8
90-619	5.8
90-620	5.19
90-623	5.19
90-624	5.12
90-625	5.12
90-626	5.12
90-627	4.59
90-628	4.59
90-629	4.59
90-634	5.12
90-635	5.10
90-636	5.10
90-637	5.10
90-638	5.10
90-650	5.2
90-651	5.2
90-652	5.2
90-653	5.2
90-654	5.2
90-655	5.2
90-658	5.44
90-659	5.44
90-660	5.35
90-661	5.35
90-662	4.58
90-675	5.31
90-677	5.31
90-679	5.31
90-698	5.19
90-699	4.55
90-703	5.42
90-704	5.42
90-705	5.43
90-706	5.44
90-707	5.44
90-708	5.44
90-709	5.42
90-710	5.43
90-711	5.42
90-712	5.44
90-713	5.44
90-714	5.42
90-715	5.42
90-716	5.44
90-717	5.42
90-718	5.42
90-719	5.42
90-720	5.44
90-721	5.43
90-722	5.44
90-729	5.35
90-742	5.43
90-743	4.55
90-744	4.55
90-745	5.32
90-746	5.32
90-747	5.32
90-748	5.32
90-752	5.43
90-754	5.19
90-755	5.19
90-756	5.19
90-757	5.19
90-758	5.19
90-759	5.19
90-760	5.19
90-761	5.19
90-762	5.19
90-763	5.19
90-764	5.19
90-765	5.19
90-766	5.31
90-767	5.19
90-768	5.19
90-769	5.43
90-770	5.5
90-771	5.4
90-790	5.4
90-791	5.4
90-805	4.61
90-808	5.31
90-809	5.31
90-810	5.31
90-811	5.31
90-814	5.31
90-815	5.31
90-817	5.31
90-818	5.31
90-819	5.31
90-827	5.31
90-828	5.31
90-831	5.33
90-832	5.33
90-835	5.33
90-836	5.33
90-837	5.33
90-838	5.33
90-839	5.33
90-840	5.33
90-841	5.33
90-842	5.33
90-843	5.33
90-844	5.33
90-845	5.33
90-846	5.33
90-847	5.33
90-848	5.33
90-849	5.33
90-853	5.33
90-855	5.33
90-860	5.31
90-861	5.31
90-862	5.31
90-863	5.31
90-880	5.31
90-881	5.31
90-882	5.31
90-883	5.31
90-884	5.31
90-885	5.31
90-886	5.31
90-887	5.31
90-888	5.31
90-890	5.18
90-891	5.18
90-892	5.18
90-893	5.18
90-894	5.18
90-895	5.18
90-896	5.18
90-897	5.18
90-936	4.55
90-940	4.55
90-941	4.55
90-950	5.6
90-951	5.6
90-952	5.6
90-953	5.6
90-959	4.42
90-963	5.44
90-964	5.44
90-966	5.44
90-968	4.55
90-998	5.44
91-74	6.47
91-104	12.14
91-223	6.40
91-237	6.43
91-239	6.47
91-241	6.92
91-242	6.60
91-250	6.29
91-251	6.29
91-261	6.46
91-262	6.46
91-263	6.45
91-264	6.45
91-265	6.45
91-266	6.46
91-267	6.46
91-268	6.46
91-269	6.41
91-271	6.91
91-272	6.96
91-277	6.64
91-280	6.46
91-283	6.62
91-284	6.70
91-285	6.62
91-286	6.70
91-287	6.64
91-288	6.70
91-289	6.62
91-291	6.68
91-302	13.12
91-310	6.87
91-313	6.64
91-314	6.64
91-315	6.48
91-321	6.62
91-322	6.62
91-328	6.64
91-329	6.45
91-330	6.45
91-331	6.45
91-332	6.45
91-337	6.29
91-338	6.29
91-339	6.29
91-340	6.29
91-348	13.12
91-349	6.62
91-350	6.62
91-352	9.10
91-355	6.43
91-356	6.43
91-358	6.43
91-361	6.64
91-362	6.64
91-363	6.41
91-372	6.43
91-374	6.43
91-376	6.43
91-379	6.43
91-380	6.43
91-382	6.43
91-383	6.43
91-386	6.43
91-388	6.43
91-389	6.43
91-390	6.43
91-393	6.43
91-394	6.43
91-395	6.43
91-397	6.43
91-399	6.43
91-411	6.47
91-430	6.43
91-431	6.43
91-432	6.43
91-436	6.43
91-437	6.43
91-438	6.43
91-442	6.43
91-443	6.43
91-444	6.43
91-445	6.43
91-449	6.43
91-450	6.43
91-451	6.43
91-452	6.43
91-466	6.43
91-469	6.64
91-470	6.64
91-471	6.43
91-472	6.43
91-473	6.43
91-476	6.43
91-477	6.43
91-478	6.43
91-481	6.43
91-486	6.43
91-490	6.43
91-512	6.44
91-513	6.46
91-514	6.46
91-517	6.46
91-518	6.47
91-520	6.47
91-526	6.64
91-527	6.64
91-528	6.70
91-529	6.70
91-530	6.70
91-531	6.70
91-537	6.40
91-538	6.41
91-539	6.41
91-540	6.41
91-541	6.47
91-549	6.64
91-566A	6.30
91-567A	6.30
91-568A	6.30
91-569A	6.30
91-570A	6.30
91-571A	6.30
91-574A	6.30
91-590	6.49
91-591	6.49
91-605	6.48
91-612	6.47
91-613	6.49
91-614	6.49
91-622	6.66
91-634	6.44
91-636	6.48
91-638	6.62
91-640	6.29
91-655	6.41
91-656	6.41
91-657	6.41
91-665	6.62
91-666	6.32
91-667	6.46
91-669	6.62
91-688	6.64
91-692	6.47
91-694	6.46
91-697	6.49
91-699	6.32
91-700	6.41
91-701	6.41
91-702	6.41
91-703	6.41
91-704	6.41
91-705	6.41
91-707	6.42
91-708	6.42
91-709	6.42
91-710	6.42
91-711	6.42
91-712	6.42
91-713	6.42
91-714	6.42
91-715	6.42
91-717	6.42
91-718	6.42
91-719	6.42
91-720	6.42
91-723	6.42
91-724	6.42
91-725	6.42
91-726	6.42
91-727	6.42
91-728	6.42
91-729	6.42
91-730	6.42
91-731	6.42
91-732	6.42
91-733	6.42
91-734	6.42
91-735	6.42
91-736	6.42
91-737	6.42
91-739	6.42
91-740	6.42
91-741	6.42
91-745	6.29
91-746	6.29
91-747	6.30
91-748	6.30
91-752	6.46
91-754	6.46
91-755	6.46
91-758	6.29
91-761	6.46
91-762	6.46
91-765	6.30
91-766	6.30
91-767	6.30
91-770	6.21
91-771	6.42
91-775	6.45
91-777	6.102
91-779	6.21
91-780	6.30
91-781	6.30
91-782	6.30
91-783	6.30
91-784	6.30
91-785	6.30
91-786	6.30
91-787	6.30
91-788	6.30
91-789	6.30
91-790	6.30
91-791	6.30
91-795	6.45
91-795	6.45
91-797	6.45
91-799	6.45
91-837	6.49
91-838	6.49
91-839	6.64
91-853	6.66
91-855	6.47
91-860	6.46
91-861	6.29
91-862	6.29
91-880	6.48
91-883	6.48
91-884	6.48
91-887	6.48
91-888	6.48
91-891	6.45
91-896	6.49
91-897	6.45
91-898	6.48
91-899	6.42
91-950	6.41
91-951	6.41
91-952	6.41
91-953	6.41
91-954	6.41
91-955	6.41
91-970	6.49
91-980	6.42
91-981	6.42
91-982	6.42
91-983	6.42
91-990	6.48
91-991	6.48
91-992	6.43
91-993	6.43
91-995	6.43
91-996	6.43
91-997	6.44
91-998	6.44
91-999	6.44
92-61	6.56
92-62	6.56
92-63	6.56
92-65	6.56
92-66	6.56
92-67	6.56
92-70	6.56
92-71	6.56
92-75	6.56
92-76	6.56
92-77	6.56
92-80	6.56
92-81	6.56
92-82	6.56
92-85	6.56
92-86	6.56
92-100	6.52
92-101	6.52
92-102	6.52
92-103	6.52
92-104	6.52
92-105	6.52
92-106	6.52
92-107	6.52
92-108	6.52
92-109	6.52
92-110	6.52
92-111	6.52
92-112	6.52
92-113	6.52
92-114	6.52
92-115	6.52
92-116	6.52
92-117	6.52
92-118	6.52
92-119	6.52
92-120	6.52
92-121	6.52
92-122	6.52
92-123	6.53
92-124	6.53
92-125	6.53
92-126	6.53
92-127	6.53
92-128	6.52
92-129	6.52
92-130	6.52
92-131	6.52
92-132	6.52
92-133	6.52
92-134	6.52
92-135	6.52
92-138	6.53
92-139	6.53
92-140	6.53
92-141	6.53
92-142	6.53
92-143	6.53
92-144	6.52
92-145	6.52
92-146	6.52
92-147	6.52
92-148	6.52
92-149	6.52
92-150	6.52
92-158	6.52
92-159	6.52
92-160	6.52
92-161	6.53
92-162	6.53
92-163	6.53
92-164	6.53
92-168	6.53
92-169	6.53
92-170	6.53
92-171	6.53
92-173	6.52
92-188	6.53
92-189	6.52
92-190	6.52
92-191	6.52
92-196	6.53
92-197	6.53
92-198	6.53
92-199	6.53
92-200	6.53
92-201	6.53
92-210	6.53
92-403	6.18
92-404	6.18
92-405	6.18
92-406	6.19
92-407	6.19
92-408	6.19
92-409	6.19
92-410	6.19
92-411	6.19
92-412	6.20
92-413	6.20
92-414	6.20
92-415	6.20
92-416	6.20
92-417	6.20
92-500	6.27
92-501	6.27
92-502	6.27
92-503	6.27
92-504	6.27
93-30	6.29
93-31	6.29
93-34	6.28
93-35	6.28
93-48	6.28
93-49	6.28
93-52	6.29
93-53	6.29
93-58	6.28
93-59	6.28
93-60	6.28
93-61	6.28
93-90	6.29
93-91	6.29
93-102	6.53
93-103	6.53
93-114	6.27

MIDWEST PART NO.	BOOK PAGE
93-115	6.27
93-118	6.27
93-118	6.27
93-119	6.27
93-120	6.27
93-121	6.27
93-122	6.27
93-123	6.27
93-130	6.27
93-131	6.27
93-132	6.27
93-133	6.27
93-175	6.28
93-176	6.28
93-177	6.28
93-177	6.28
93-178	6.28
93-179	6.28
93-180	6.28
93-181	6.28
93-182	6.28
93-183	6.28
93-184	6.28
93-185	6.28
93-186	6.28
93-187	6.28
93-188	6.28
93-189	6.28
93-221	6.58
93-259	6.70
93-260	6.70
93-261	6.58
93-262	6.58
93-263	6.58
93-264	6.58
93-268	6.64
93-269	6.64
93-270	6.64
93-271	6.64
93-272	6.62
93-273	6.62
93-275	6.57
93-280	6.57
93-283	6.57
93-290	6.57
93-291	6.57
93-294	6.57
93-306	6.50
93-307	6.50
93-308	6.50
93-311	6.50
93-313	6.50
93-314	6.50
93-315	6.50
93-316	6.50
93-317	6.50
93-318	6.50
93-319	6.50
93-320	6.50
93-321	6.50
93-322	6.50
93-323	6.50
93-324	6.50
93-325	6.50
93-326	6.50
93-327	6.50
93-328	6.50
93-330	6.50
93-331	6.50
93-332	6.50
93-333	6.50
93-334	6.50
93-335	6.50
93-336	6.50
93-337	6.50
93-338	6.50
93-339	6.50
93-340	6.50
93-341	6.50
93-342	6.50
93-346	6.50
93-347	6.50
93-348	6.50
93-349	6.50
93-354	6.50
93-355	6.50
93-356	6.50
93-357	6.50
93-358	6.50
93-359	6.50
93-360	6.50
93-361	6.50
93-362	6.58
93-365	6.57
93-366	6.57
93-367	6.57
93-370	6.57
93-371	6.57
93-373	6.57
93-388	6.57
93-421	6.37
93-422	6.58
93-428	6.57
93-430	6.57
93-445	6.70
93-456	6.50
93-457	6.50
93-458	6.50
93-459	6.50
93-460	6.50
93-461	6.50
93-462	6.50
93-463	6.50
93-464	6.50
93-470	6.50
93-471	6.50
93-472	6.50
93-473	6.50
93-474	6.50
93-476	6.50
93-486	6.58
93-490	6.58
93-491	6.58
93-497	6.58
93-501	6.57
93-502	6.57
93-503	6.57
93-521	6.57
93-522	6.57
93-523	6.57
93-535	6.50
93-536	6.50
93-538	6.50
93-539	6.50
93-550	6.50
93-551	6.50
93-565	6.50
93-567	6.50
93-593	6.50
93-597	6.50
93-600	6.50
93-615	6.57
93-616	6.57
93-618	6.66
93-631	6.50
93-633	6.50
93-634	6.50
93-640	6.55
93-641	6.55
93-642	6.55
93-643	6.55
93-644	6.55
93-645	6.55
93-646	6.55
93-647	6.55
93-648	6.55
93-649	6.55
93-650	6.55
93-651	6.55
93-652	6.55
93-653	6.55
93-654	6.55
93-655	6.55
93-656	6.55
93-657	6.55
93-659	6.55
93-660	6.55
93-662	6.55
93-663	6.55
93-664	6.55
93-667	6.57
93-671	6.57
93-672	6.57
93-675	6.57
93-676	6.66
93-679	6.55
93-680	6.55
93-681	6.55
93-684	6.55
93-685	6.55
93-686	6.55
93-687	6.55
93-688	6.55
93-689	6.55
93-690	6.55
93-691	6.55
93-692	6.55
93-693	6.55
93-699	6.55
93-718	6.57
93-719	6.57
93-720	6.57
93-722	6.57
93-744	6.54
93-755	6.50
93-756	6.50
93-757	6.50
93-758	6.50
93-759	6.50
93-760	6.50
93-761	6.27
93-762	6.27
93-763	6.27
93-764	6.27
93-772	6.30
93-780	6.51
93-781	6.51
93-782	6.51
93-783	6.51
93-784	6.51
93-785	6.51
93-786	6.51
93-787	6.51
93-788	6.51
93-789	6.51
93-790	6.51
93-791	6.51
93-792	6.51
93-794	6.51
93-795	6.51
93-796	6.51
93-797	6.51
93-798	6.51
93-820	6.27
93-821	6.27
93-832	6.27
93-833	6.27
93-858	6.28
93-859	6.28
93-860	6.28
93-861	6.28
93-862	6.28
93-863	6.28
93-864	6.28
93-865	6.28
93-870	6.27
93-871	6.27
93-872	6.27
93-873	6.27
93-876	6.20
93-877	6.20
93-878	6.20
93-879	6.20
93-890	6.28
93-890M	6.29
93-891	6.29
93-891M	6.29
93-892M	6.29
93-892	6.28
93-893M	6.29
93-893	6.29
93-900	6.29
93-907	6.29
93-908	6.27
93-909	6.27
93-910	6.27
93-911	6.27
93-912	6.27
93-913	6.27
93-930	6.29
93-930M	6.29
93-931M	6.29
93-931	6.29
93-932	6.29
93-932M	6.29
93-933	6.29
93-933M	6.29
93-934	6.28
93-935	6.28
93-936	6.28
93-937	6.28
93-948	6.28
93-949	6.28
93-950	6.28
93-951	6.28
93-952P	6.29
93-952M	6.29
93-952	6.29
93-953P	6.29
93-953	6.29
93-953M	6.29
93-954	6.29
93-954M	6.29
93-955M	6.29
93-955	6.29
93-965	6.27
93-966	6.27
93-967	6.27
93-968	6.27
93-969	6.27
93-970	6.28
93-971	6.28
93-972	6.28
93-973	6.28
93-974	6.28
93-975	6.28
93-976	6.28
93-977	6.28
93-978	6.28
93-979	6.28
93-980	6.28
93-981	6.28
93-982	6.28
93-983	6.28
93-984	6.28
93-985	6.28
93-986	6.28
93-987	6.28
93-988	6.28
93-989	6.28
93-990	6.27
93-991	6.27
93-992	6.27
93-993	6.27
93-994	6.27
93-995	6.27
93-996	6.27
93-997	6.27
93-998	6.27
93-999	6.27
94-1	7.60
94-2	7.60
94-3	7.60
94-4	7.60
94-5	7.60
94-6	7.60
94-7	7.60
94-33	7.62
94-52	7.60
94-53	7.61
94-55	7.62
94-84	7.61
94-85	7.62
94-95	5.27
94-96	5.27
94-97	7.62
94-98	7.62
94-99	7.62
94-100	7.59
94-101	7.59
94-105	7.60
94-106	7.60
94-112	7.60
94-113	7.60
94-114	7.60
94-119	7.62
94-120	7.62
94-122	7.62
94-123	7.62
94-124	7.61
94-125	7.61
94-126	7.61
94-132	7.58
94-134	7.58
94-135	7.58
94-136	7.58
94-137	6.25
94-138	7.58
94-139	7.58
94-140	7.58
94-141	5.30
94-142	7.58
94-143	5.30
94-144	7.62
94-154	7.60
94-155	7.60
94-156	5.30
94-160	7.62
94-162	7.62
94-163	7.62
94-165	7.60
94-167	7.62
94-168	7.62
94-169	7.62
94-170	7.61
94-171	7.61
94-172	7.60
94-173	7.61
94-174	7.58
94-176	7.62
94-177	7.62
94-180	7.59
94-181	7.59
94-190	7.63
94-191	7.63
94-192	7.63
94-200	6.27
94-201	6.27
94-202	6.27
94-203	6.27
94-213	7.60
94-214	7.60
94-215	7.60
94-218	7.59
94-219	7.59
94-263	7.59
94-265	7.63
94-270	7.59
94-271	7.59
94-284	7.61
94-298	7.63
94-299	7.63
94-300	7.60
94-301	7.60
94-302	7.60
94-303	7.60
94-305	7.60
94-306	7.60
94-307	7.60
94-309	7.60
94-310	7.60
94-311	7.60
94-319	7.60
94-320	7.60
94-327	7.59
94-330	7.59
94-331	7.59
94-332	7.59
94-333	7.59
94-334	7.59
94-335	7.59
94-336	7.59
94-337	7.59
94-339	7.59
94-348	7.59
94-370	5.17
94-371	5.17
94-372	5.17
94-373	5.17
94-378	7.63
94-381	7.63
94-382	2.5
94-383	2.5
94-384	2.5
94-385	2.5
94-386	2.5
94-387	2.5
94-389	2.5
94-600	5.12
94-601	5.12
94-602	5.12
94-603	5.12
94-604	5.8
94-605	5.8
94-606	5.8
94-607	5.8
94-624	5.8
94-628	5.12
94-629	5.12
94-630	5.4
94-631	5.4
94-632	5.4
94-633	5.4
94-634	5.4
94-635	5.4
94-640	5.6
94-641	5.6
94-642	5.6
94-643	5.6
94-644	5.6
94-645	5.6
94-650	5.7
94-651	5.7
94-652	5.7
94-653	5.7
94-654	5.7
94-655	5.7
94-660	5.8
94-661	5.8
94-670	5.5
94-671	5.5
94-672	5.5
94-673	5.5
94-674	5.5
94-675	5.5
94-701	5.18
94-710	5.2
94-711	5.2
94-712	5.2
94-713	5.2
94-714	5.2
94-715	5.2
94-720	5.3
94-721	5.3
94-722	5.3
94-723	5.3
94-724	5.3
94-725	5.3
94-950	5.18
95-1	7.8
95-62	6.92
95-71	6.87
95-76	6.92
95-101	1.37
95-102	1.37
95-103	1.37
95-105	6.92
95-106	3.6
95-107	3.22
95-108	6.87
95-110	6.92
95-111	3.20
95-112	3.6
95-113	3.20
95-114	6.83
95-118	3.6
95-119	3.6
95-127	8.46
95-128	3.6
95-132	3.6
95-133	8.31
95-135	3.6
95-140	6.96
95-142	6.25
95-143	8.25
95-144	6.26
95-145	6.25
95-146	6.25
95-147	6.26
95-148	6.26
95-149	5.27
95-154	3.6
95-163	6.83
95-164	6.83
95-165	6.83
95-166	3.6
95-167	6.83
95-170	7.45
95-171	7.45
95-173	6.23
95-174	1.37
95-175	3.6
95-176	5.52
95-177	3.20
95-180	3.6
95-185	5.27
95-189	3.6
95-190	7.82
95-192	3.6

MIDWEST PART NO.	BOOK PAGE
95-194	3.6
95-196	5.30
95-198	6.85
95-201	3.6
95-203	3.6
95-204	3.6
95-205	3.20
95-206	3.20
95-208	3.6
95-209	7.37
95-214	3.6
95-219	6.86
95-220	6.86
95-221	6.98
95-222	6.87
95-223	7.38
95-224	3.6
95-226	1.46
95-227	7.83
95-228	7.80
95-229	7.32
95-230	7.32
95-231	3.6
95-232	7.32
95-235	5.27
95-236	7.32
95-238	7.83
95-241	6.64
95-243	3.6
95-253	7.48
95-255	5.52
95-257	3.6
95-258	6.83
95-259	6.25
95-266	3.6
95-267	3.6
95-268	3.6
95-271	3.6
95-275	6.86
95-281	3.4
95-282	3.4
95-283	3.4
95-287	3.4
95-289	3.4
95-292	6.86
95-293	6.86
95-294	6.86
95-295	6.86
95-307	6.26
95-308	5.28
95-309	7.32
95-310	6.92
95-311	3.22
95-312	7.32
95-313	3.4
95-314	7.43
95-316	7.34
95-318	6.92
95-319	3.4
95-320	6.23
95-321	8.32
95-322	7.34
95-324	7.34
95-325	7.32
95-326	3.20
95-327	7.32
95-328	7.34
95-334	6.87
95-335	6.96
95-336	6.96
95-340	6.87
95-341	6.87
95-342	6.87
95-343	6.87
95-344	6.83
95-345	6.83
95-346	7.42
95-347	7.43
95-348	3.4
95-356	6.64
95-358	3.4
95-359	3.4
95-360	3.20
95-361	3.4
95-362	3.4
95-363	3.4
95-365	3.4
95-366	3.4
95-367	3.4
95-369	8.55
95-370	5.30
95-372	7.10
95-374	3.4
95-375	7.32
95-376	7.32
95-377	3.4
95-380	7.87
95-381	6.95
95-382	7.32
95-383	7.32
95-384	7.32
95-386	3.4
95-393	6.83
95-394	7.34
95-395	7.34
95-399	3.10
95-400	3.20
95-401	3.20
95-402	3.4
95-403	8.33
95-404	3.4
95-410	8.30
95-411	7.32
95-412	6.95
95-413	1.46
95-414	7.45
95-416	6.91
95-417	6.91
95-418	6.87
95-423	7.32
95-424	7.32
95-425	7.32
95-426	7.32
95-427	7.32
95-428	7.32
95-429	6.23
95-431	7.20
95-432	7.3
95-433	7.3
95-434	7.4
95-435	6.45
95-436	6.45
95-437	3.4
95-438	3.20
95-439	3.20
95-440	3.20
95-441	3.20
95-442	3.20
95-443	3.21
95-444	3.21
95-445	3.22
95-446	5.27
95-447	6.94
95-448	6.95
95-449	3.4
95-450	7.87
95-451	7.87
95-452	7.87
95-454	6.87
95-455	6.45
95-456	3.4
95-462	7.28
95-550	3.4
95-551	3.4
95-556	3.4
95-559	3.4
95-563	3.4
95-564	3.4
95-565	3.4
95-566	3.4
95-570	3.4
95-576	3.4
95-591	3.4
95-595	3.4
95-596	3.4
95-599	7.14
95-600	7.6
95-602	6.25
95-603	6.25
95-604	6.25
95-605	6.25
95-606	3.4
95-609	7.51
95-612	3.6
95-620	6.78
95-650	7.18
95-656	3.4
95-662	3.4
95-664	3.4
95-669	3.4
95-700	6.70
95-701	1.54
95-703	6.110
95-704	7.95
95-706	6.112
95-707	1.54
95-708	7.95
95-709	6.96
95-711	6.110
95-712	7.94
95-713	6.66
95-714A	7.83
95-714	7.92
95-715	7.93
95-716	6.66
95-717	7.3
95-718	6.112
95-719	6.112
95-721	1.54
95-722	6.112
95-723	7.93
95-724	7.94
95-725	6.113
95-726	6.106
95-727	6.106
95-728	7.93
95-730	1.54
95-731	6.109
95-732	7.94
95-733	6.116
95-734	6.113
95-735	7.34
95-736	7.20
95-737	7.92
95-738	7.82
95-738A	1.54
95-740	6.112
95-741	6.114
95-742	6.110
95-743	6.109
95-744	6.106
95-746	6.116
95-747	6.116
95-748	7.96
95-749	6.114
95-750	6.116
95-751	7.87
95-751A	7.93
95-752	1.54
95-753	6.34
95-754	6.106
95-755	6.106
95-756	6.114
95-757	6.106
95-758	6.113
95-759	6.113
95-760	8.55
95-761	13.5
95-762	1.54
95-763	7.95
95-764	6.94
95-765	6.95
95-766	7.34
95-767	7.32
95-768	7.93
95-769	7.95
95-770	7.34
95-771	7.95
95-772	7.93
95-773	6.110
95-774	6.116
95-775	6.110
95-777	6.21
95-777A	6.21
95-778	7.37
95-779	7.41
95-780	7.93
95-781	1.54
95-782	7.93
95-783	7.32
95-784	7.93
95-785	7.93
95-786	7.93
95-787	7.6
95-788	1.54
95-789	7.93
95-790	7.92
95-791	7.3
95-792	7.93
95-793	7.3
95-794	7.92
95-795	7.93
95-796	7.93
95-798	6.114
95-799	7.93
95-800	7.86
95-801	7.50
95-802	5.52
95-804	6.78
95-805	6.21
95-806	7.82
95-807	7.82
95-808	7.82
95-809	6.24
95-810	6.26
95-811	6.26
95-813	6.103
95-816	6.106
95-817	6.106
95-818	6.106
95-819	6.106
95-820	7.92
95-821	7.92
95-822	6.107
95-823	6.107
95-825	6.106
95-826	6.106
95-827	6.106
95-828	6.34
95-829	6.109
95-830	6.109
95-831	7.93
95-832	7.93
95-833	7.93
95-834	1.54
95-836	1.54
95-837	1.54
95-838	7.93
95-839	7.93
95-840	7.93
95-841	7.93
95-842	1.54
95-843	7.93
95-848	7.93
95-853	6.110
95-854	6.110
95-855	6.110
95-856	6.110
95-857	6.110
95-858	6.112
95-859	7.94
95-864	6.110
95-865	6.106
95-866	8.45
95-872	3.4
95-873	3.9
95-874	3.9
95-875	3.8
95-877	3.8
95-901	3.20
95-902	3.20
95-905	6.80
95-909	5.52
95-910	5.52
95-911	5.52
95-912	5.52
95-913	5.52
95-915	5.52
95-990	6.80
95-992	6.80
95-993	6.80
95-994	6.80
96-4	7.50
96-5	7.47
96-9	7.48
96-13	7.55
96-15	7.20
96-16	7.20
96-19	7.32
96-20	7.45
96-41	7.48
96-57	7.55
96-58	7.47
96-60	7.48
96-61	7.48
96-62	7.53
96-69	7.34
96-70	7.34
96-71	7.32
96-84	7.48
96-85	7.48
96-86	7.48
96-87	7.48
96-88	7.50
96-89	7.47
96-93	7.57
96-94	7.57
96-95	7.57
96-96	7.57
96-100	7.40
96-101	7.40
96-102	7.46
96-103	7.46
96-104	7.46
96-108	7.40
96-110	7.48
96-115	7.51
96-119	7.45
96-120	7.45
96-121	7.32
96-122	7.32
96-123	7.45
96-124	7.45
96-129	7.40
96-130	7.40
96-152	7.32
96-153	7.32
96-155	7.32
96-156	7.45
96-158	7.32
96-159	7.32
96-160	7.32
96-162	7.36
96-163	7.32
96-164	7.36
96-165	7.32
96-166	7.32
96-167	7.19
96-169	7.34
96-172	7.32
96-173	7.45
96-174	7.45
96-175	7.45
96-176	5.30
96-178	7.43
96-179	7.43
96-185	7.32
96-190	7.48
96-192	7.83
96-193	7.87
96-194	7.87
96-195	7.87
96-196	7.51
96-199	7.48
96-200	7.48
96-201	7.40
96-202	7.51
96-204	7.24
96-207	7.86
96-210	7.48
96-211	7.48
96-226	7.32
96-227	7.43
96-230	7.45
96-231	7.32
96-232	7.45
96-233	7.48
96-234	7.34
96-235	7.42
96-236	7.34
96-237	7.28
96-247	7.54
96-249	7.68
96-250	7.68
96-251	7.68
96-252	7.72
96-253	7.72
96-256	7.57
96-257	7.32
96-265	7.34
96-268	7.40
96-269	7.43
96-270	7.51
96-271	7.51
96-276	7.43
96-277	7.57
96-278	7.45
96-281	7.34
96-283	7.42
96-286	7.32
96-287	7.43
96-290	7.43
96-293	7.40
96-294	7.41
96-295	7.42
96-299	7.37
96-308	7.48
96-309	7.48
96-310	1.46
96-311	7.32
96-312	7.32
96-313	7.34
96-315	7.34
96-320	7.58
96-321	7.42
96-324	7.45
96-327	7.34
96-328	7.89
96-329	7.55
96-330	6.94
96-332	7.43
96-333	7.48
96-334	7.32
96-336	7.43
96-337	7.43
96-338	7.34
96-339	7.52
96-341	7.43
96-343	7.43
96-345	7.32
96-346	7.53
96-348	7.40
96-349	7.43
96-351	7.89
96-352	7.52
96-365	7.55
96-371	7.45
96-372	7.45
96-373	7.55
96-374	7.55
96-375	7.43
96-376	7.55
96-405	7.54
96-406	7.40
96-407	7.40
96-408	7.32
96-409	7.48
96-410	7.32
96-411	7.32
96-413	7.40
96-414	7.32
96-416	7.32
96-419	7.89
96-420	7.53
96-421	7.40
96-422	7.32
96-432	7.32
96-433	7.55
96-434	7.40
96-435	7.57
96-436	7.57
96-437	7.57
96-438	7.57
96-439	7.57
96-440	7.57
96-441	7.57
96-442	7.57
96-443	7.57
96-444	7.32
96-445	7.32
96-446	7.32
96-447	7.32
96-448	7.32
96-449	7.32
96-450	7.32
96-451	7.57
96-452	7.57
96-460	7.57
96-461	7.57
96-462	7.57
96-464	7.40
96-467	7.55
96-468	7.56
96-469	7.57
96-471	7.32
96-473	7.32
96-474	7.34
96-479	7.32
96-480	7.52

MIDWEST PART NO.	BOOK PAGE
96-481	7.52
96-482	7.34
96-483	7.34
96-484	7.41
96-485	7.41
96-486	7.26
96-487	7.26
96-488	7.26
96-489	7.26
96-490	7.26
96-491	7.26
96-492	7.26
96-493	7.26
96-494	7.26
96-495	7.26
96-496	7.26
96-497	7.26
96-498	7.26
96-499	7.26
96-500	7.26
96-501	7.26
96-502	7.34
96-503	7.34
96-505	7.34
96-507	7.26
96-508	7.26
96-509	7.26
96-510	7.26
96-511	7.26
96-512	7.26
96-513	7.26
96-514	7.26
96-515	7.26
96-516	7.26
96-517	7.26
96-518	7.26
96-519	7.26
96-520	7.26
96-521	7.26
96-522	7.26
96-523	7.26
96-524	7.26
96-525	7.26
96-526	7.26
96-529	7.56
96-533	7.41
96-534	7.56
96-536	7.52
96-537	7.52
96-538	7.57
96-539	7.40
96-540	7.42
96-547	7.48
96-549	7.55
96-550	7.40
96-551	7.89
96-552	7.89
96-554	7.28
96-555	7.40
96-557	7.55
96-558	7.48
96-559	7.48
96-560	7.27
96-561	7.56
96-562	7.56
96-563	7.4
96-564	7.47
96-565	7.57
96-567	7.27
96-570	7.36
96-575	7.36
96-576	7.36
96-581	7.32
96-582	7.32
96-583	7.32
96-584	7.32
96-585	7.45
96-586	7.34
96-587	7.52
96-590	7.32
96-591	7.32
96-594	7.40
96-595	7.40
96-596	7.40
96-598	7.40
96-599	4.49
96-605	7.41
96-607	7.41
96-608	7.3
96-609	7.3
96-612	2.5
96-613	7.32
96-618	7.56
96-621	7.3
96-630	7.6
96-631	7.48
96-638	7.6
96-646	7.12
96-652	7.6
96-653	7.48
96-654	7.57
96-655	7.57
96-656	7.29
96-657	7.16
96-658	7.16
96-659	7.3
96-660	7.28
96-666	7.12
96-667	7.28
96-668	7.12
96-669	7.4
96-674	7.6
96-680	7.6
96-681	7.6
96-682	7.50
96-683	7.9
96-684	7.16
96-685	7.16
96-686	7.47
96-695	7.14
96-696	7.6
96-698	7.14
96-699	7.10
96-700	7.10
96-701	7.14
96-702	7.6
96-703	7.6
96-704	7.6
96-705	7.6
96-706	7.45
96-708	7.6
96-709	7.20
96-715	7.14
96-723	7.6
96-724	7.3
96-725	7.16
96-726	7.16
96-729	7.3
96-730	7.54
96-731	7.54
96-732	7.3
96-733	7.3
96-734	7.3
96-735	7.3
96-736	7.3
96-737	7.3
96-738	7.3
96-739	7.3
96-740	7.3
96-741	7.3
96-742	7.3
96-743	7.3
96-744	7.3
96-746	7.3
96-747	7.3
96-748	7.3
96-749	7.3
96-750	7.4
96-751	7.6
96-753	7.20
96-754	7.4
96-755	7.6
96-757	7.6
96-758	7.6
96-759	7.6
96-760	7.6
96-761	7.6
96-762	7.6
96-763	7.6
96-764	7.6
96-765	7.6
96-766	7.6
96-767	7.6
96-768	7.6
96-769	7.6
96-770	7.6
96-771	7.14
96-772	7.12
96-773	7.4
96-774	7.6
96-775	7.4
96-776	7.4
96-777	7.4
96-778	7.3
96-779	7.20
96-780	7.4
96-781	7.4
96-782	7.20
96-783	7.4
96-784	7.12
96-785	7.4
96-788	7.4
96-789	7.14
96-790	7.6
96-791	7.6
96-792	7.40
96-793	7.12
96-801	7.87
96-803	7.50
96-804	7.50
96-806	2.6
96-807	2.6
96-811	7.55
96-812	7.55
96-813	7.47
96-814	7.50
96-815	7.50
96-825	7.63
96-826	7.63
96-829	7.3
96-830	7.3
96-835	7.3
96-836	7.3
96-837	7.3
96-838	2.5
96-839	2.5
96-840	2.5
96-841	2.5
96-850	2.5
96-851	2.5
96-854	7.3
96-856	7.3
96-857	7.3
96-858	7.3
96-859	7.3
96-861	2.5
96-862	2.5
96-863	7.3
96-872	7.3
96-882	7.27
96-883	7.28
96-884	2.5
96-885	2.5
96-887	7.6
96-888	7.10
96-890	7.14
96-893	7.4
96-894	7.4
96-898	7.10
96-899	7.10
96-905	7.4
96-907	7.4
96-909	7.4
96-911	7.56
96-912	7.56
96-913	7.56
96-916	7.55
96-917	7.56
96-918	7.56
96-919	7.56
96-924	7.4
96-925	7.56
96-927	2.5
96-928	2.5
96-929	2.5
96-930	2.5
96-931	2.5
96-940	7.10
96-941	7.6
96-942	7.9
96-943	7.9
96-944	7.9
96-945	7.9
96-946	7.3
96-947	7.3
96-948	7.3
96-949	7.3
96-951	7.12
96-952	7.4
96-953	7.12
96-954	7.12
96-955	7.12
96-958	7.19
96-959	7.5
96-960	7.5
96-961	7.6
96-962	7.6
96-969	7.19
96-972	7.54
96-973	7.54
96-974	7.54
96-975	7.54
96-980	7.56
96-981	7.56
96-983	7.19
96-984	7.19
96-985	7.19
96-986	7.19
96-987	7.19
96-988	7.19
96-989	7.19
96-990	7.19
96-991	7.19
96-992	7.19
96-993	7.19
96-994	7.19
96-995	7.19
96-996	7.19
96-997	7.19
97-2	12.14
97-3	12.10
97-5	1.4
97-6	12.15
97-7	12.15
97-11	12.15
97-14	12.9
97-15	12.9
97-16	12.9
97-31	12.10
97-32	12.10
97-57	12.9
97-60	12.10
97-104	12.15
97-106	12.10
97-126	12.12
97-127	12.10
97-173	12.10
97-174	12.10
97-181	12.9
97-207	12.14
97-208	12.5
97-215	12.15
97-273	8.35
97-274	12.15
97-290	12.11
97-301	12.10
97-315	6.21
97-318	12.9
97-319	12.9
97-360	12.14
97-361	12.14
97-400	12.11
97-401	12.11
97-403	12.14
97-404	12.14
97-405	12.14
97-406	12.14
97-407	12.11
97-408	12.12
97-410	12.12
97-411	12.14
97-413	12.12
97-414	12.11
97-415	12.12
97-416	12.13
97-417	12.13
97-418	12.12
97-419	12.12
97-420	12.11
97-421	12.12
97-422	12.13
97-423	12.13
97-424	12.13
97-425	12.13
97-426	12.13
98-63	6.99
98-64	6.99
98-65	6.98
98-66	6.98
98-74	6.81
98-75	6.81
98-76	6.81
98-77	6.81
98-78	6.81
98-79	6.81
98-80	6.81
98-81	6.81
98-82	6.81
98-83	6.81
98-84	6.81
98-85	6.81
98-86	6.81
98-87	6.81
98-88	6.81
98-89	6.80
98-251	6.36
98-255	6.83
98-256	6.83
98-257	6.83
98-262	6.89
98-264	6.83
98-265	6.83
98-266	6.92
98-267	6.92
98-271	6.83
98-272	6.34
98-273	6.83
98-274	6.83
98-275	6.98
98-276	6.83
98-279	6.80
98-282	6.36
98-285	6.83
98-286	6.83
98-288	6.83
98-289	6.83
98-291	6.83
98-293	6.83
98-294	6.83
98-295	6.83
98-297	6.36
98-298	6.83
98-299	6.92
98-300	6.83
98-301	6.83
98-302	6.80
98-303	6.83
98-305	6.83
98-309	6.98
98-312	6.83
98-314	6.83
98-317	6.85
98-318	6.83
98-319	6.83
98-320	6.83
98-321	6.85
98-323	6.89
98-324	6.92
98-325	6.34
98-329	6.34
98-330	6.83
98-331	6.94
98-332	6.87
98-333	6.83
98-334	6.34
98-336	6.83
98-339	6.25
98-344	6.83
98-345	6.83
98-346	6.83
98-347	6.83
98-354	6.83
98-355	6.83
98-358	6.11
98-359	6.11
98-360	6.23
98-361	6.83
98-363	6.83
98-364	6.94
98-365	6.92
98-366	6.90
98-367	6.90
98-368	6.90
98-369	6.90
98-370	6.90
98-371	6.90
98-372	6.87
98-373	6.76
98-374	6.76
98-375	6.76
98-376	6.76
98-377	6.76
98-378	6.76
98-379	6.76
98-380	6.76
98-381	6.76
98-382	6.76
98-383	6.76
98-384	6.76
98-386	6.90
98-387	6.90
98-388	6.90
98-389	6.90
98-390	6.90
98-391	6.90
98-392	6.90
98-393	6.90
98-394	6.90
98-395	6.90
98-396	6.90
98-397	6.90
98-398	6.90
98-399	6.90
98-400	6.90
98-401	6.90
98-403	6.90
98-404	6.90
98-405	6.90
98-406	6.90
98-407	6.90
98-408	6.90
98-409	6.90
98-410	6.90
98-411	6.90
98-412	6.90
98-413	6.89
98-414	6.89
98-418	6.83
98-419	6.83
98-420	6.83
98-421	6.25
98-422	6.25
98-423	6.83
98-424	6.83
98-425	6.83
98-427	6.83
98-443	6.80
98-445	6.80
98-446	6.80
98-447	6.80
98-448	6.80
98-449	6.80
98-450	6.80
98-451	6.80
98-452	6.80
98-453	6.80
98-454	6.80
98-455	6.80
98-456	6.80
98-457	6.80
98-458	6.87
98-465	6.83
98-475	6.25
98-478	6.89
98-479	6.89
98-480	6.87
98-487	6.87
98-490	6.23
98-502	6.36
98-504	6.36
98-505	6.36
98-506	6.36
98-507	6.36
98-508	6.36
98-510	6.23
98-511	6.23
98-512	6.81
98-513	6.87
98-515	6.33
98-516	6.33
98-517	6.11
98-518	6.33
98-519	6.33
98-520	6.11
98-521	6.26
98-522	6.26
98-523	6.25
98-524	6.25
98-531	6.25

MIDWEST PART NO.	BOOK PAGE
98-532	6.81
98-536	6.23
98-537	6.25
98-539	6.25
98-540	6.23
98-542	6.23
98-543	6.23
98-544	6.23
98-545	6.23
98-546	6.25
98-547	6.23
98-548	6.26
98-549	6.25
98-550	6.25
98-552	6.25
98-553	6.25
98-554	6.25
98-555	6.26
98-556	6.26
98-557	6.26
98-558	6.26
98-559	6.26
98-567	6.26
98-568	6.26
98-569	6.26
98-570	6.80
98-571	6.89
98-572	6.89
98-573	6.25
98-574	6.26
98-575	6.26
98-577A	6.24
98-578	6.26
98-579	6.26
98-580	6.26
98-581	6.24
98-584	6.83
98-586	6.80
98-587	6.80
98-588	6.80
98-589	6.80
98-594	6.25
98-596	6.26
98-597	6.26
98-598	6.26
98-599	6.26
98-601	6.26
98-604	6.34
98-605	6.34
98-606	6.34
98-607	6.34
98-611	6.35
98-613	6.35
98-614	6.35
98-615	6.35
98-616	6.35
98-617	6.34
98-618	6.34
98-619	6.34
98-620	6.34
98-622	6.34
98-623	6.34
98-624	6.35
98-625	6.21
98-626	6.34
98-627	6.21
98-628	6.34
98-631	6.26
98-635	6.26
98-640	6.37
98-641	6.37
98-642	6.37
98-643	6.37
98-644	6.37
98-645	6.37
98-650	6.25
98-651	6.25
98-652	6.25
98-653	6.25
98-654	6.25
98-664	6.83
98-670	6.26
98-671	6.26
98-672	6.26
98-673	6.26
98-674	6.26
98-675	6.37
98-700	6.79
98-701	6.79
98-702	6.79
98-703	6.79
98-704	6.79
98-705	6.79
98-706	6.79
98-707	6.79
98-708	6.79
98-710	6.36
98-711	6.36
98-712	6.79
98-713	6.79
98-714	6.79
98-715	6.79
98-720	6.79
98-721	6.79
98-722	6.79
98-730	6.40
98-731	6.58
98-812	6.81
98-902	7.17
98-903	7.16
98-904	7.16
98-905	7.16
98-906	7.9
98-907	7.16
98-908	7.9
98-909	7.9
98-910	7.9
98-911	7.9
98-912	7.16
98-913	7.9
98-914	7.9
98-915	7.16
98-916	7.16
98-917	7.16
98-918	7.9
98-919	7.9
98-920	7.9
98-921	7.9
98-922	7.9
98-923	7.10
98-924	7.10
98-925	7.4
98-927	7.6
98-928	7.9
98-929	7.4
98-930	7.4
98-931	7.4
98-934	7.10
98-936	7.10
98-937	7.10
98-938	7.10
98-939	7.10
98-940	7.4
98-941	7.9
98-960	6.91
98-961	6.91
98-962	6.91
98-963	6.91
98-964	6.91
98-965	6.91
98-966	6.91
102-21	11.10
103-1	12.5
103-12	12.9
103-13	12.3
103-14	12.3
103-15	12.2
103-16	12.2
103-17	12.2
103-18	12.2
103-19	12.2
103-24	12.2
103-25	12.2
103-26	12.2
103-27	12.2
103-28	12.2
103-29	12.3
103-30	12.3
103-54	12.3
103-55	12.3
103-56	12.3
103-82	12.4
103-83	12.4
103-84	12.4
103-85	12.4
103-86	12.4
103-87	12.4
103-88	12.4
103-89	12.4
103-90	12.4
103-110	12.6
103-111	12.6
103-112	12.6
103-114	12.6
103-115	12.7
103-116	12.8
103-117	12.8
103-175	12.2
103-191	12.5
103-197	12.5
103-201	12.9
103-250	12.5
103-252	12.5
103-300	12.3
103-704	12.5
104-3	2.16
104-13	2.17
104-14	2.17
104-15	2.17
104-16	2.17
104-17	3.3
104-18	3.3
104-20	2.17
104-21	2.17
104-22	2.17
104-23	2.17
104-24	2.17
104-25	2.17
104-26	2.17
104-27	2.17
104-28	2.17
104-29	2.17
104-35	2.16
104-63	2.4
104-64	2.4
104-67	2.4
104-68	2.4
104-69	2.4
104-70	2.4
104-71	2.17
104-72	2.17
104-73	2.17
105-1	2.9
105-2	2.9
105-12	2.9
105-13	2.9
105-15	2.9
105-16	2.9
105-17	2.9
105-19	2.9
105-34	2.9
105-35	2.9
105-36	2.9
105-37	2.9
105-38	2.9
105-41	2.9
105-42	2.9
105-43	2.9
105-44	2.8
105-45	2.8
105-46	2.8
105-47	2.8
105-48	2.8
105-49	2.8
105-50	2.8
105-51	2.8
114-1	6.73
114-2	6.73
114-4	6.73
114-5	6.73
114-8	6.73
114-9	6.73
114-10	6.73
114-13	6.73
114-14	6.73
114-15	6.73
114-16	6.73
114-17	6.73
114-18	6.73
114-24	6.73
114-26	6.73
114-27	6.72
114-38	6.73
114-45	6.74
114-46	6.72
114-48	6.72
114-49	6.73
114-50	6.73
114-51	6.73
114-52	6.72
114-53	6.72
114-54	6.72
114-55	6.72
114-56	6.72
114-57	6.74
114-58	6.74
114-60	6.74
114-63	6.76
114-65	6.74
114-67	6.74
114-68	6.72
114-69	6.74
114-70	6.74
114-72	6.75
114-74	6.75
114-76	6.75
114-80	6.75
114-81	6.72
114-82	6.75
114-84	6.75
114-86	6.75
114-88	6.75
114-89	6.74
114-90	6.74
114-91	6.74
114-96	6.75
114-97	6.75
114-98	6.75
114-154	6.73
114-156	6.73
114-165	6.74
114-221	6.78
114-245	6.72
114-246	6.72
114-344	6.77
114-345	6.77
114-346	6.77
114-347	6.77
114-348	6.77
114-349	6.77
114-350	6.77
114-351	6.77
114-803	6.76
114-804	6.76
115-9	11.10
115-10	11.10
115-12	11.10
116-6	2.23
116-10	2.22
116-100	2.21
116-101	2.21
116-102	2.21
116-103	2.21
116-228	2.21
116-229	2.21
116-231	2.21
116-232	2.21
116-233	2.21
116-246	2.21
116-255	2.22
116-256	2.22
116-257	2.22
116-258	2.22
117-31	3.3
117-35	3.2
117-37	3.2
117-39	3.2
117-41	3.2
117-42	3.2
117-44	3.2
117-45	3.2
117-46	3.2
117-67	3.3
117-68	3.3
117-70	3.3
117-72	3.3
117-75	3.3
117-76	3.3
117-77	3.3
117-78	3.3
117-79	3.3
117-80	3.3
117-158	3.6
117-161	3.3
117-162	3.3
117-163	3.3
117-164	3.3
117-165	3.3
117-166	3.3
117-190	3.3
117-191	3.3
117-192	3.3
117-193	3.3
117-194	3.3
117-195	3.3
117-196	3.3
117-197	3.8
117-237	3.4
117-246	3.3
117-247	3.3
117-248	3.3
117-249	3.3
117-250	3.3
117-251	3.3
117-252	3.3
117-253	3.3
117-254	3.3
117-255	3.3
117-256	3.3
117-300	3.4
117-301	3.4
117-302	3.4
121-1	11.6
121-6	11.6
121-7	11.6
121-8	11.6
121-10	11.6
121-11	11.6
121-12	11.6
121-13	11.6
121-19	11.6
121-20	11.6
121-21	11.6
121-22	11.6
121-23	11.6
121-24	11.6
121-25	11.6
121-26	11.6
121-27	11.6
123-4	4.48
123-5	4.48
123-6	4.48
123-7	4.47
123-8	4.47
123-10	4.48
123-11	4.48
123-12	4.48
123-13	4.48
123-14	4.47
123-15	4.47
123-18	4.48
123-20	4.48
123-21	4.48
123-22	4.47
123-23	4.47
123-27	4.48
123-28	4.47
123-29	4.48
123-39	4.48
201-31	7.2
201-32	7.2
201-33	7.2
201-34	7.2
201-35	7.2
201-36	7.2
201-45	7.13
201-49	7.13
201-50	7.13
201-57	7.8
201-58	7.8
201-59	7.8
201-70	7.8
201-71	7.8
201-72	7.8
206-21	6.22
206-22	6.22
206-25	6.22
206-40	6.22
206-41	6.22
206-42	6.22
206-43	6.22
206-44	6.22
206-45	6.22
206-48	6.22
206-49	6.22
206-50	6.22
206-51	6.22
206-52	6.22
206-53	6.22
206-54	6.22
206-55	6.22
206-56	6.22
206-57	6.22
206-70	6.22
206-71	6.22
206-72	6.22
206-73	6.22
206-74	6.22
206-78	6.22
216-46	6.11
216-47	6.11
245-11	11.10
290-101	6.13
290-102	6.13
290-103	6.13
290-105	6.13
290-106	6.13
290-107	6.13
292-254	6.5
292-255	6.5
292-272	6.5
292-273	6.5
292-274	6.5
296-228	6.7
296-229	6.7
296-230	6.7
296-231	6.7
296-232	6.7
296-243	6.7
296-244	6.7
296-245	6.7
296-250	6.7
296-251	6.7
296-252	6.7
296-253	6.7
296-254	6.7
296-255	6.7
296-256	6.7
296-257	6.7
296-258	6.7
296-272	6.7
296-273	6.7
296-274	6.7
298-100	7.17
298-105	7.4
298-106	7.4
298-109	7.17
298-110	7.17
298-112	7.17
298-113	7.4
298-125	7.17
298-210	6.9
298-211	6.9
298-212	6.8
298-213	6.8
298-214	6.9
298-215	6.9
298-216	6.8
298-230U	6.10
298-230	6.3
298-231	6.3
298-231U	6.10
298-232	6.3
298-232U	6.10
298-243	6.3
298-243U	6.10
298-244	6.3
298-244U	6.10
298-245U	6.10
298-245	6.3
298-250	6.4
298-250U	6.10
298-251	6.4
298-251U	6.10
298-252	6.4
298-252U	6.10
298-253	6.3
298-253U	6.10
298-254U	6.10
298-254	6.3
298-255U	6.10
298-255	6.3
298-256	6.3
298-256U	6.10
298-257	6.3
298-257U	6.10
298-258U	6.10
298-258	6.3
298-272	6.3

MIDWEST PART NO.	BOOK PAGE
298-272U	6.10
298-273U	6.10
298-273	6.3
298-274U	6.10
298-274	6.3
298-360	6.6
298-361	6.6
298-362	6.6
298-363	6.6
298-364	6.6
298-366	6.6
300-453	6.23
300-533	6.23
300-534	6.23
300-535	6.23
300-541	6.23

MIDWEST PART NO.	BOOK PAGE

MIDWEST PART NO.	BOOK PAGE

MIDWEST PART NO.	BOOK PAGE

MIDWEST PART NO.	BOOK PAGE

MIDWEST PART NO.	BOOK PAGE

MIDWEST PART NO.	BOOK PAGE

H-D® / MIDWEST PART NUMBER CROSS REFERENCE

The following is a list of Harley-Davidson® part numbers with the corresponding MIDWEST part numbers. The use of H-D® part numbers is for reference only and are not intended to imply that any parts that we sell are H-D® original equipment. It is our desire to supply our customers with parts equal to or better than original equipment.

OEM NO.	MIDWEST PART NO.	BOOK PAGE
275	98-487	6.87
655	41-890	6.97
657	41-886	13.9
704	98-299	6.92
720	98-490	6.23
1211	96-192	7.83
1301	41-333	13.13
1614	5-116	2.22
3570	53-211	9.4
3958	5-105	2.22
4070	11-86	1.30
4081	5-115	2.22
4721	123-14	4.47
4961	83-21	2.4
6003	96-659	7.3
6016	40-318	13.12
6114	78-443	13.5
6410	24-1	11.4
6469	41-398	6.37
6506	98-298	6.83
6750	96-594	7.40
6752	96-595	7.40
6754	96-596	7.40
6769	91-271	6.91
6770	91-272	6.96
7022	32-170	5.30
7036	96-241	1.46
7142	83-22	2.7
7515	96-681	7.6
7753	40-318	13.12
7813	32-170	5.30
7872	41-418	13.10
7875	41-418	13.10
7911	96-172	7.32
7926	96-269	7.43
7977	96-173	7.45
7980	32-119	5.28
7986	32-170	5.30
7993	5-108	2.22
8011	98-363	6.83
8025	98-300	6.83
8215	96-349	7.43
8485	94-135	7.58
8486	94-135	7.58
8524	94-136	7.58
8532	94-132	7.58
8860	95-107	3.22
8888	95-394	7.34
8904	96-609	7.3
8977	95-434	7.4
8996	95-432	7.3
9007	95-101	1.37
9008	95-149	5.27
9025	95-316	7.34
9028	95-320	6.23
9029	95-318	6.92
9036	96-241	1.46
9040	95-227	7.83
9052	95-446	5.27
9057	95-140	6.96
9058	95-173	6.23
9063	95-226	1.46
9064	95-174	1.37
9076	83-23	2.4
9088	95-174	1.37
9110	98-386	6.90
9120	98-387	6.90
9121	98-388	6.90
9122	98-389	6.90
9123	98-390	6.90
9124	98-391	6.90
9125	98-392	6.90
9126	98-393	6.90
9127	98-394	6.90
9128	98-395	6.90
9129	98-396	6.90
9130	98-397	6.90
9131	98-398	6.90
9132	98-399	6.90
9133	98-400	6.90
9134	98-401	6.90
9135	95-450	7.87
9142	98-403	6.90
9143	98-404	6.90
9144	98-405	6.90
9145	98-406	6.90
9146	98-407	6.90
9147	98-408	6.90
9148	98-409	6.90
9149	98-410	6.90
9155	98-411	6.90
9261	95-219	6.86
9262	95-220	6.86
9263	95-292	6.86
9264	95-293	6.86
9265	95-294	6.86
9266	95-295	6.86
9992	66-204	12.15
9996	66-205	12.15
10014	66-206	12.15
10084	66-207	12.15
10086	66-209	12.15
11000	96-309	7.48
11002	98-329	6.34
11004	53-311	1.37
11005	96-481	7.52
11007	98-266	6.92
11020	96-685	7.16
11027	33-184	5.27
11031	47-102	4.20
11036	47-103	7.41
11039	96-310	1.46
11052	96-480	7.52
11067	96-621	7.3
11096	96-452	7.57
11100	95-700	6.70
11101	95-701	1.54
11105	95-703	6.110
11106	95-704	7.95
11110	95-706	6.112
11115	95-798	6.114
11116	95-707	1.54
11119	95-708	7.95
11124	95-709	6.96
11125	95-190	7.82
11132	95-241	6.64
11139	95-712	7.94
11143	45-34	4.28
11145	95-713	6.66
11147	95-714	7.92
11148	95-715	7.93
11157	95-716	6.66
11158	83-24	2.7
11161	95-433	7.3
11165	95-717	7.3
11166	95-799	7.93
11167	95-718	6.112
11168	95-719	6.112
11171	95-721	1.54
11176	95-722	6.112
11178	95-795	7.93
11179	95-723	7.93
11187	95-724	7.94
11188	95-725	6.113
11190	95-726	6.106
11207	33-184	5.27
11218	98-475	6.25
11241	95-727	6.106
12002	95-103	1.37
12010	95-779	7.41
12013	95-728	7.93
12014	95-778	7.37
12018	95-784	7.93
12022	95-780	7.93
12023	95-730	1.54
12030	95-732	7.94
12035	95-792	7.93
12036	95-733	6.116
12050	95-736	7.20
12051	95-788	1.54
12052	95-737	7.92
12053	95-738	7.82
12066	95-794	7.92
34816	97-106	12.10
10020A	66-208	12.15
11133A	95-711	6.110
12013A	95-789	7.93
12026B	95-731	6.109
12035A	95-793	7.3
12036A	95-734	6.113
12044A	95-796	7.93
12045DL	95-787	7.6
12046DL	95-735	7.34
12052DL	95-790	7.92
12067A	95-791	7.3
16219-79A	5-193	2.19
16464-73B	93-259	6.70
16465-73B	93-260	6.70
16483-48	93-373	6.57
16484-48	93-273	6.62
16485-74A	93-270	6.64
16492-48	93-273	6.62
16492-74A	93-271	6.64
16493-48	93-273	6.62
16602-30	41-401	6.60
16664-86	78-350	6.68
16769-57	78-63	6.70
16770-66B	78-61	6.64
16773-85	78-352	6.66
16774-72	78-41	6.70
16774-86A	78-353	6.66
16776-63	78-33	6.62
16777-63	78-51	6.62
16777-83A	78-355	6.116
16777-84A	78-356	6.66
16779-84A	78-357	6.66
16814-48	93-421	6.37
16814-77	93-421	6.37
16837-85B	93-618	6.66
16853-48	5-76	2.18
17026-71	77-320	6.113
17026-72	77-321	6.113
17026-73	77-322	6.113
17026-79	77-323	6.113
17026-82	77-324	6.113
17026-86	77-310	6.111
17026-86A	77-313	6.111
17026-91	77-311	6.111
17026-91A	77-308	6.111
17028-48	77-333	6.109
17029-66	77-330	6.109
17029-70A	77-331	6.109
17029-80	77-332	6.109
17030-52	77-329	6.113
17030-57	77-325	6.113
17030-72	77-326	6.113
17030-72A	77-327	6.113
17030-72B	77-328	6.113
17030-86A	77-316	6.111
17030-88A	77-317	6.111
17030-89	77-318	6.112
17030-91	77-319	6.112
17032-91	77-309	6.111
17033-83A	77-305	6.107
17034-48	77-335	6.109
17034-66X	77-334	6.109
17035-83A	77-301	6.107
17035-84	77-302	6.107
17038-90	77-307	6.107
17040-92A	77-304	6.107
17041-92A	77-300	6.107
17042-92	77-306	6.107
17324-57B	71-138	8.46
17353-86	78-358	6.112
17353-89	78-359	6.112
17354-86	78-360	6.112
17354-89	78-361	6.112
17355-84	78-362	6.108
17355-92	78-363	6.108
17356-84A	78-364	6.108
17356-92	78-365	6.108
17358-84A	78-366	6.66
17360-66A	91-313	6.64
17375-66	91-314	6.64
17394-57A	91-528	6.70
17395-57A	91-529	6.70
17396-57A	91-530	6.70
17397-57A	91-531	6.70
17428-57	95-356	6.64
17435-57A	91-288	6.70
17435-57B	91-288	6.70
17447-36	41-349	6.39
17507-48	78-367	6.109
17509-54A	89-73	6.62
17510-84	89-374	6.39
17516-77B	89-344	6.39
17517-77B	89-344	6.39
17518-80	89-344	6.39
17519-80	89-344	6.39
17528-84A	89-351	6.39
17530-84B	89-375	6.39
17536-70	78-48	6.70
17540-69A	78-368	6.109
17541-48B	78-369	6.109
17550-80	89-344	6.39
17552-80	89-344	6.39
17611-66A	91-287	6.64
17611-66B	91-287	6.64
17611-83	91-666	6.32
17901-86	91-518	6.47
17904-57	91-268	6.46
17935-66	91-512	6.44
17937-57B	89-133	6.44
17938-40	89-135	6.44
17944-89	95-740	6.112
17947-36	91-321	6.62
17950-66	91-328	6.64
17955-36A	95-741	6.114
17955-48A	95-742	6.110
18000-81	95-743	6.109
18001-83A	95-744	6.106
18109-81A	91-237	6.43
18111-79	91-237	6.43
18181-36	91-485	6.43
18183-40	41-349	6.39
18185-40	91-481	6.43
18196-51	78-370	6.62
18198-38	78-371	6.116
18220-57	91-655	6.41
18221-36	91-269	6.41
18222-48	91-657	6.41
18257-39	95-746	6.116
18492-48	91-283	6.62
18507-85	91-520	6.47
18508-52A	91-284	6.70
18508-52B	91-284	6.70
18510-38	91-239	6.47
18522-53A	91-285	6.62
18534-29A	91-74	6.47
18540-83A	91-614	6.49
18542-83A	91-614	6.49
18554-52	91-286	6.70
18554-57	91-286	6.70
18555-36	91-242	6.60
18570-38	91-239	6.47
18600-66B	91-361	6.64
18600-66C	91-361	6.64
18610-66B	91-362	6.64
18630-26	95-747	6.116
18631-30	78-372	6.116
18633-48C	78-373	6.108
18634-48B	78-374	6.108
1864B	96-613	7.32
22282-52	93-221	6.58
22325-55B	93-330	6.50
22355-57A	93-306	6.50
22355-72	93-314	6.50
22357-57A	93-307	6.50
22358-57A	93-308	6.50
22361-57A	93-311	6.50
22363-57A	93-313	6.50
22581-32	93-362	6.58
22588-78	93-422	6.58
2265W	96-207	7.86
2333W	96-201	7.40
23533-55A	53-20	9.11
23557-83	53-651	1.52
23901-81	98-420	6.83
23909-80	98-339	6.25
23960-54	98-345	6.83
23960-54US	98-345	6.83
23960-80A	98-361	6.83
23961-41	98-465	6.83
23961-41S	98-418	6.83
23961-80A	98-354	6.83
23961-80AS	98-419	6.83
23962-40	98-346	6.83
23966-36	98-314	6.83
23966-54A	98-288	6.83
23967-41	98-288	6.83
23967-54A	98-333	6.83
23969-83	98-421	6.25
23972-57	98-330	6.83
23973-41	98-271	6.83
23985-12	98-274	6.83
23985-18	98-273	6.83
23985-54	98-305	6.83
23985-56	94-137	6.25
24000-29	98-317	6.85
24000-57	98-318	6.83
24000-75	98-301	6.83
24000-80	98-425	6.83
24001-30	98-285	6.83
24001-56	98-264	6.83
24001-65	98-293	6.83

OEM NO.	MIDWEST PART NO.	BOOK PAGE
24001-70	98-294	6.83
24001-72	98-295	6.83
24002-70	98-360	6.23
24003-30	94-139	7.58
24003-55	94-138	7.58
24005-37	98-321	6.85
24005-57	98-319	6.83
24006-37	98-320	6.83
24006-54A	98-289	6.83
24006-55	98-289	6.83
24006-58	98-256	6.83
24006-73	98-291	6.83
24006-80	98-355	6.83
24006-87	98-427	6.83
24007-39	98-286	6.83
24009-29	98-317	6.85
24010-BLU	98-446	6.80
24010-BR	98-449	6.80
24010-GR	98-447	6.80
24010-OR	98-443	6.80
24010-RE	98-445	6.80
24010-WH	98-448	6.80
24010-YE	98-450	6.80
24016-80	98-422	6.25
24017-80	98-423	6.83
24020-51	98-312	6.83
24022-90	98-458	6.87
24023-36	98-424	6.83
24023-54	98-302	6.80
2402-W	12-177	8.36
24032-70	98-366	6.90
24033-70	98-367	6.90
24034-70	98-368	6.90
24035-70	98-369	6.90
24036-70	98-370	6.90
24037-70	98-371	6.90
24040-78	98-451	6.80
24041-78	98-452	6.80
24042-78	98-453	6.80
24043-78	98-454	6.80
24044-78	98-455	6.80
24045-78	98-456	6.80
24046-78	98-457	6.80
24100-17	98-276	6.83
24110-17	98-276	6.83
24275-57	98-265	6.83
24275-80A	98-478	6.89
24275-86A	98-479	6.89
24281-41A	98-262	6.89
24281-74A	98-323	6.89
24281-80	98-413	6.89
24281-83A	98-414	6.89
24331-36	95-114	6.83
24356-36A	95-167	6.83
24362-54A	95-345	6.83
24364-54A	95-345	6.83
24366-71	95-344	6.83
24367-71	95-344	6.83
24370-29	95-198	6.85
24370-52A	95-258	6.83
24385-40B	95-259	6.25
24490-36	5-118	2.6
24599-40	95-76	6.92
24599-58A	95-310	6.92
24599-58B	95-429	6.23
24621-40	95-62	6.92
24692-58	98-365	6.92
24701-52	98-364	6.94
24701-54	98-331	6.94
24702-40	98-267	6.92
24703-54	98-89	6.80
24721-30	95-308	5.28
24729-52	95-447	6.94
24729-74	95-448	6.95
24912-48	98-324	6.92
24921-37	78-375	6.116
24931-39	95-748	7.96
24975-37	96-330	6.94
24978-57	95-749	6.114
24987-52	41-889	6.97
24990-52	95-750	6.116
25225-36C	78-377	6.87
25225-70	78-378	6.104
25225-93	78-379	6.104
25256-80A	88-53	6.78
25258-80B	88-53	6.78
25263-81	78-380	6.96
25263-86	78-381	6.96
25263-90	78-382	6.104
25266-80A	88-53	6.78
25266-93A	88-70	6.78
25268-84A	88-53	6.78
25313-50	98-76	6.81
25314-50	98-77	6.81
25315-50	98-78	6.81
25316-52	98-75	6.81
25320-79	98-80	6.81
25321-79	98-81	6.81
25322-79	98-82	6.81
25323-79	98-83	6.81
25325-79	98-84	6.81
25326-79	98-85	6.81
25327-79	98-86	6.81
25328-79	98-87	6.81
25414-70	89-112	7.87
25416-70	78-383	7.92
25416-84	95-751	7.87
25430-86A	88-58	7.82
25430-88	88-58	7.82
25459-86A	88-58	7.82
25550-36	98-374	6.76
25550-57	98-372	6.87
25551-36	98-375	6.76
25552-36	98-376	6.76
25553-36	98-377	6.76
25554-36	98-378	6.76
25555-36	98-379	6.76
25556-36	98-380	6.76
25556-79	98-380	6.76
25557-36	98-381	6.76
25557-79	98-381	6.76
25558-36	98-382	6.76
25558-79	98-382	6.76
25559-36	98-383	6.76
25559-79	98-383	6.76
25581-36	95-108	6.87
25581-70	95-340	6.87
25582-36	95-334	6.87
25582-54	95-342	6.87
25582-73	95-341	6.87
25582-93	95-454	6.87
25586-37	95-416	6.91
25588-57	95-417	6.91
25593-57	95-335	6.96
25593-74	95-336	6.96
25597-36	95-71	6.87
25785-30A	95-343	6.87
25791-36	91-310	6.87
25791-77	91-310	6.87
25810-15	98-332	6.87
25811-11	95-752	1.54
25856-36	95-418	6.87
25882-54	95-342	6.87
26072-90	78-458	7.95
26077-93	78-459	7.95
26227-58	95-753	6.34
26244-37	78-384	6.110
26245-41	78-385	6.98
26246-37	78-386	6.116
26246-68D	78-387	6.110
26256-52	78-388	6.114
26257-50A	78-389	6.98
26258-52	78-390	6.98
26258-62	78-391	6.98
26258-68D	78-392	6.110
26259-52	78-393	6.98
26259-62	78-394	6.98
26263-80	41-888	6.23
26273-80B	78-395	6.35
26273-92	78-396	6.35
26276-80A	78-397	6.35
26276-92	78-398	6.35
26315-68A	98-63	6.99
26317-68A	98-64	6.99
26326-62A	98-65	6.98
26328-74	98-66	6.98
26340-36	98-275	6.98
26346-36	98-309	6.98
26346-69	98-334	6.34
26346-70	98-334	6.34
26348-15	98-272	6.34
26348-36	98-325	6.34
26349-73	98-359	6.11
26432-76A	95-754	6.106
26433-77	95-755	6.106
26434-76A	95-756	6.114
26434-91	95-757	6.106
26495-75	78-399	6.113
26495-89	78-400	6.113
26551-39C	17-61	1.49
26552-72	17-61	1.49
26554-77	17-64	1.49
26554-77A	17-64	1.49
26554-77B	17-64	1.49
26554-77D	17-64	1.49
26557-83	53-651	1.52
26558-84	53-650	9.11
26561-84	17-65	1.49
26561-99	39-148	1.49
26566-91	53-652	1.52
26856-89	78-401	6.108
2690W	77-113	1.36
26995-86A	95-758	6.113
27002-89	95-759	6.113
27009-86B	69-90	8.33
27010-86B	69-91	8.23
27023-71	78-402	8.54
27040-88	12-247	8.27
27060-55	95-760	8.55
27062-78	95-321	8.32
27063-78	66-84	8.32
27063-80	66-84	8.32
27066-85T	66-84	8.32
27077-78	78-403	8.54
27219-95	39-134	8.13
27270-95	39-132	8.13
27326-71	95-143	8.25
27366-76	41-419	13.13
27367-76	41-419	13.13
27380-33A	39-347	8.27
27380-50	39-347	8.27
27382-33	39-346	8.27
27382-77	39-388	8.30
27411-40	78-408	8.27
27416-76	39-358	8.30
27417-76	39-357	8.30
27419-76	39-355	8.30
27459-74	39-344	8.29
27577-92	95-410	8.30
27609-01	39-131	8.13
27609-01A	39-128	8.13
27609-01B	39-128	8.13
27609-04	39-128	8.13
27613-71	39-23	8.25
27629-01	39-138	8.13
27646-71	78-111	8.25
27658-06	39-142	8.13
27659-06	39-141	8.13
27894-78	39-386	8.30
27896-79	39-385	8.30
27897-78	39-387	8.30
29036-41TA	12-126	8.39
29036-72T	12-127	8.39
29055-78TA	12-130	8.39
29059-83TA	12-181	8.39
29059-88A	78-410	8.54
29086-73T	12-128	8.39
29086-75T	12-129	8.39
29215-78	39-414	8.29
29216-67/72	39-364	8.29
29219-78	39-364	8.29
29219-82	39-364	8.29
29242-83	78-411	8.54
29250-78	78-151	8.35
29259-86T	12-231	8.39
29259-91A	12-261	8.39
29282-89T	12-131	8.39
29533-55A	53-20	9.11
29534-55A	53-21	9.11
29550-55	78-412	9.11
29954-71	53-296	1.34
29960-85	53-631	1.33
29961-85	53-630	1.33
29965-81	53-341	1.34
29967-89	53-346	1.34
29970-88	53-319	1.33
29970-88A	53-345	1.34
30011-36	53-195	1.36
30011-58	53-194	1.36
30012-58	53-252	1.37
30095-61	53-253	1.37
30137-58	89-32	1.36
30138-30	78-413	1.54
30143-58	78-415	1.54
30145-46A	95-102	1.37
30228-32	77-113	1.36
30280-58	53-256	1.37
30350-65	53-185	1.37
30350-66	53-185	1.37
30373-51	77-113	1.36
30426-58	53-144	1.37
30605-48	53-13	9.10
30605-48A	53-13	9.10
30801-47	53-388	9.10
31015-30	77-113	1.36
31035-58	53-193	1.37
31067-63	53-298	1.37
31070-30	53-161	1.37
31070-58	53-161	1.37
31073-63A	53-161	1.37
31080-83T	89-10	1.36
31081-83T	89-32	1.36
31320-80	78-450	1.54
31321-80	78-451	1.54
31341-80DL	95-781	1.54
31350-83T	89-1	1.44
31433-84A	95-761	13.5
31438-65A	53-325	1.45
31441-65A	53-321	1.45
31443-65A	53-157	1.45
31444-65A	53-247	1.45
31445-65A	53-294	1.44
31458-66A	70-130	1.43
31463-88T	70-131	1.43
31471-67A	78-416	1.54
31476-66	14-27	1.43
31488-77	78-417	1.54
31488-81	78-418	1.54
31489-79B	53-286	1.44
31502-65	95-413	1.46
31504-91A	53-695	1.45
31506-79B	53-265	1.45
31507-87T	89-280	1.44
31522-00	39-152	1.9
31522-00B	39-152	1.9
31522-00C	39-152	1.9
31537-66	70-135	1.43
31541-66	70-134	1.43
31542-66	70-133	1.43
31559-89T	70-139	1.43
31570-73	70-138	1.43
31576-73	70-145	1.43
31581-73	70-143	1.43
31582-73	70-142	1.43
31583-73	70-144	1.43
31601-04	39-153	1.9
31609-65A	53-29	9.14
31609-80	53-230	9.14
31610-83T	89-71	9.18
31614-83	53-297	9.14
31640-91	89-399	9.18
31644-91	89-492	9.18
31663-90	70-211	1.45
31723-71A	5-113	9.19
31727-72	5-113	9.19
31728-78	5-86	9.19
31800-65	89-70	9.18
31800-78	89-70	9.18
3201-W	41-945	8.33
32306-61	3-167	9.24
32316-99	39-137	8.13
32400-80A	53-638	9.4
32400-94	53-640	9.4
32402-83	53-528	9.10
32404-90	53-639	9.4
32446-99	39-139	8.13
32466-99	39-139	8.13
32516-66	53-151	9.11
32521-36	78-419	1.54
32522-37	78-420	6.114
32522-70	53-209	9.4
32542-70A	53-246	9.4
32584-88T	89-304	9.18
32588-70A	89-128	9.18
32591-70	78-421	6.110
32591-80	78-422	6.108
32601-78	91-352	9.10
32605-70	53-208	9.4
32629-70	53-210	9.4
32658-30	53-16	9.10
32661-70	53-12	9.10
32670-70	53-207	9.4
32726-30	53-15	9.13
32726-30A	53-14	9.13
32726-47	53-14	9.13
33030-68	96-232	7.45
33031-70	77-349	7.37
33031-76E	96-582	7.32
33031-76L	96-583	7.32
33031-80	77-350	7.37
33031-82	77-351	7.37
33031-85	77-352	7.37
33031-91	77-353	7.37
33031-93	77-354	7.37
33048-57	96-337	7.43
33055-78A	96-232	7.45
33057-72	47-58	7.43
33057-77	47-93	7.43
33061-89T	47-93	7.43
33076-37	95-762	1.54
33080-36	96-176	5.30
33082-16	96-155	7.32
33085-36	96-167	7.19
33090-36	96-174	7.45
33094-57A	96-178	7.43
33094-77A	96-179	7.43
33096-54B	96-20	7.45
33099-52A	96-336	7.43
33110-54	96-341	7.43
33119-79B	96-680	7.6
33150-59	89-166	7.45
33151-80	89-166	7.45
33152-59	96-174	7.45
33162-67	96-587	7.52
33163-65B	96-320	7.58

OEM NO.	MIDWEST PART NO.	BOOK PAGE
33174-79	96-605	7.41
33175-16	22-100	7.46
33175-16A	22-71	7.19
33182-63A	22-49	7.43
33187-79	96-484	7.41
33196-79	78-448	7.38
33215-30	22-82	7.43
33295-36	78-462	7.45
33326-79A	96-696	7.6
33332-79A	96-698	7.14
33333-79	94-172	7.60
33334-85	96-825	7.63
33336-83	94-172	7.60
33337-83	94-155	7.60
33338-83	94-154	7.60
33344-94	96-826	7.63
33348-57	96-337	7.43
33350-36	96-124	7.45
33353-36	96-121	7.32
33353-78	96-121	7.32
33362-52	96-332	7.43
33379-57	96-276	7.43
33379-71A	96-287	7.43
33381-39	96-119	7.45
33390-52	96-343	7.43
33391-36	96-123	7.45
33391-52	96-343	7.43
33393-50	96-175	7.45
33396-39	96-156	7.45
33429-39	96-122	7.32
33429-80	96-408	7.32
33430-50	96-120	7.45
33438-50	95-171	7.45
33442-57	95-314	7.43
33442-57A	95-314	7.43
33445-89	95-807	7.82
33445-94A	95-806	7.82
33446-89	95-800	7.86
33446-94A	95-808	7.82
33630-52	47-80	4.18
33640-83	47-182	4.19
33664-81	47-149	4.19
33715-85	96-652	7.6
33895-82	47-183	4.19
33900-59	17-72	1.49
33900-59C	17-72	1.49
33901-79	17-703	1.49
33902-98	17-701	7.40
33904-00	17-702	1.49
33904-00B	17-702	1.49
34031-41	96-434	7.40
34035-52	95-763	7.95
34037-52	95-346	7.42
34050-36	96-598	7.40
34082-79	96-702	7.6
34084-86	96-630	7.6
34085-79A	96-695	7.14
34086-79	96-704	7.6
34088-87	96-638	7.6
34091-85	95-451	7.87
34140-36	96-348	7.40
34158-36	96-129	7.40
34159-36	96-130	7.40
34165-36	96-407	7.40
34168-39	96-293	7.40
34168-52	96-294	7.41
34175-36	96-406	7.40
34179-33	96-421	7.40
34180-33	96-413	7.40
34186-76	96-348	7.40
34191-79D	96-699	7.10
34193-79D	96-700	7.10
34195-79D	96-701	7.14
34291-52B	96-283	7.42
34291-52C	96-540	7.42
34381-84	96-522	7.26
34447-52	47-63	7.40
34447-74	47-160	7.40
34468-86A	96-563	7.4
34476-72	96-533	7.41
34477-53	96-555	7.40
34478-53	96-555	7.40
34498-52	96-792	7.40
34500-52A	96-550	7.40
34551-52	96-268	7.40
34552-52	78-464	7.37
34555-52	96-108	7.40
34555-74	96-539	7.40
34564-74A	47-25	4.19
34565-52	78-465	7.37
34599-81	47-118	4.19
34600-71	47-24	4.19
34606-54A	47-24	4.19
34606-54TA	47-24	4.19
34606-71	47-24	4.19
34606-74	47-149	4.19
34606-75	47-89	4.19
34606-90	47-162	4.19
34609-52	22-45	4.22
34611-65	22-107	4.22
34624-77	78-423	7.94
34628-54A	96-295	7.42
34628-75	96-321	7.42
34724-36	96-590	7.32
34799-65	96-464	7.40
34824-36	78-466	7.37
34824-79	78-463	7.38
34825-41	78-95	7.38
34871-71C	96-351	7.89
34898-79	95-347	7.43
34901-85	78-425	7.92
34901-94	78-427	7.92
34902-79A	78-428	7.38
34903-79	78-429	7.38
34904-79	78-453	7.30
34904-86	78-461	7.4
34906-79	78-430	7.92
34906-85B	78-431	7.92
34911-91	96-551	7.89
34917-90	78-456	7.95
34949-71	88-77	7.86
34952-52	78-432	7.82
34955-67	78-433	7.82
34955-75	78-434	7.92
34955-89	78-435	7.92
35039-70B	96-153	7.32
35039-80	96-153	7.32
35046-36	96-416	7.32
35046-71A	96-315	7.34
35047-53	96-482	7.34
35047-71A	96-338	7.34
35050-40	96-334	7.32
35064-79	96-657	7.16
35066-77	96-185	7.32
35067-77A	96-185	7.32
35070-77	96-411	7.32
35076-79	96-684	7.16
35078-79	96-683	7.9
35094-65	95-229	7.32
35100-36	95-423	7.32
35100-79	95-424	7.32
35105-52	96-281	7.34
35111-36	96-591	7.32
35112-52	96-586	7.34
35125-37	95-309	7.32
35129-36	96-311	7.32
35131-36	96-432	7.32
35150-52	77-170	7.34
35151-52A	95-764	6.94
35151-74	95-765	6.95
35159-39	96-414	7.32
35169-52	95-766	7.34
35171-37	96-410	7.32
35175-38	96-422	7.32
35203-36	94-52	7.60
35203-80	94-154	7.60
35204-41	94-53	7.61
35208-84	94-176	7.62
35211-36	94-140	7.58
35211-91	94-381	7.63
35212-73	94-112	7.60
35212-80	94-155	7.60
35216-36	94-134	7.58
35230-39	95-236	7.32
35230-39DL	95-785	7.93
35231-36	95-767	7.32
35277-52A	96-169	7.34
35282-59	96-471	7.32
35282-74	96-164	7.36
35295-36	78-46	7.37
35296-56	96-69	7.34
35305-56	96-70	7.34
35306-59	96-163	7.32
35309-54A	96-394	7.34
35322-38	95-230	7.32
35326-73	96-514	7.26
35327-73	96-487	7.26
35328-73	96-489	7.26
35329-73	96-491	7.26
35337-36	96-226	7.32
35337-56	96-483	7.34
35344-73	96-507	7.26
35349-52	96-508	7.26
35350-52	96-509	7.26
35351-52	96-510	7.26
35352-52	96-511	7.26
35353-52	96-512	7.26
35354-52	96-513	7.26
35355-72	96-515	7.26
35357-82	96-517	7.26
35358-82	96-518	7.26
35359-82	96-519	7.26
35360-82	96-520	7.26
35362-52	96-502	7.34
35363-52	96-502	7.34
35364-56	96-503	7.34
35365-36	95-375	7.32
35380-84	96-521	7.26
35381-84	96-522	7.26
35382-84	96-523	7.26
35383-84	96-524	7.26
35384-84	96-525	7.26
35385-84	96-526	7.26
35440-38	96-159	7.32
35607-73	78-449	1.54
35613-58	96-234	7.34
35614-65	96-19	7.32
35614-76	96-160	7.32
35629-79	96-658	7.16
35630-36	96-479	7.32
35635-69T	96-599	4.49
35652-79A	78-452	7.30
35665-36A	96-158	7.32
35695-58	96-236	7.34
35699-76	96-165	7.32
35700-69	96-286	7.32
35700-73	96-286	7.32
35709-54A	96-265	7.34
35713-36T	96-286	7.32
35716-76T	96-165	7.32
35717-74	96-162	7.36
35751-36	96-166	7.32
35765-36	96-345	7.32
35771-89	96-570	7.36
35773-86	96-575	7.36
35775-89	96-576	7.36
35789-36	95-232	7.32
35809-58	96-505	7.34
35810-36	96-312	7.32
35811-36	95-376	7.32
35812-36	95-384	7.32
35818-72	96-486	7.26
35819-72	96-488	7.26
35820-52	96-492	7.26
35821-52	96-493	7.26
35821-72	96-490	7.26
35824-52	96-494	7.26
35825-52	96-495	7.26
35828-52	96-496	7.26
35829-52	96-497	7.26
35836-55	96-499	7.26
35838-55	96-500	7.26
35839-55	96-501	7.26
35840-52	96-498	7.26
35875-36	96-231	7.32
35876-36	96-444	7.32
35877-36	96-445	7.32
35878-36	96-446	7.32
35879-36	96-447	7.32
35882-36	96-448	7.32
35883-36	96-449	7.32
35884-36	96-450	7.32
35915-36	95-383	7.32
35917-36	95-382	7.32
35920-36	96-473	7.32
35960-54	95-395	7.34
35961-52	95-372	7.10
36045-76	95-426	7.32
36046-36	95-425	7.32
36048-36	95-427	7.32
36048-76A	95-428	7.32
36787-84	96-467	7.55
36801-79	78-454	7.30
36801-87A	78-455	7.12
36917-36	10-27	4.19
36918-52	10-26	4.19
36954-62	22-53	4.26
36956-65A	22-97	4.26
36964-67	22-99	4.26
37051-36	47-60	4.23
37052-65	47-56	4.23
37053-68	47-56	4.23
37054-79A	47-108	4.23
37069-90	96-654	7.57
37070-39B	96-565	7.57
37074-38A	96-547	7.48
37075-84	96-468	7.56
37085-80	47-157	4.23
37088-79	96-435	7.57
37088-84	96-439	7.57
37088-85	96-441	7.57
37088-87	96-442	7.57
37088-90	96-538	7.57
37089-79	96-436	7.57
37089-84	96-438	7.57
37090-79	96-437	7.57
37090-84	96-440	7.57
37090-84A	96-655	7.57
37094-82	47-157	4.23
37096-83	47-157	4.23
37096-85	47-157	4.23
37101-84	95-768	7.93
37105-87	96-554	7.28
37201-54	96-115	7.51
37222-52	96-235	7.42
37228-75	96-460	7.57
37276-53	96-461	7.57
37279-56	96-461	7.57
37280-67	96-462	7.57
37281-47	96-462	7.57
37282-53	96-462	7.57
37285-38	96-93	7.57
37285-41	96-93	7.57
37285-65	96-94	7.57
37285-70	96-95	7.57
37285-75A	96-96	7.57
37285-84	96-443	7.57
37287-41	96-62	7.53
37305-65	96-94	7.57
37305-70	96-256	7.57
37310-39	95-253	7.48
37312-75	96-451	7.57
37313-80	96-451	7.57
37339-53	95-769	7.95
37357-41	96-85	7.48
37357-84	96-89	7.47
37361-41	96-86	7.48
37436-36	95-411	7.32
37496-41	96-61	7.48
37496-47	96-61	7.48
37496-65	96-61	7.48
37496-90	96-682	7.50
37503-41	96-190	7.48
37523-15	96-200	7.48
37523-85	96-204	7.24
37526-56A	96-270	7.51
37527-67	96-271	7.51
37531-56B	95-770	7.34
37533-52A	96-196	7.51
37549-41	96-13	7.55
37550-41B	96-41	7.48
37550-84A	96-5	7.47
37567-41A	96-60	7.48
37574-44	96-233	7.48
37576-41	96-84	7.48
37581-47	96-199	7.48
37583-41	96-210	7.48
37585-41	96-211	7.48
37702-70A	96-559	7.48
37703-41	96-558	7.48
37707-90	96-814	7.50
37707-94	96-815	7.50
37740-57	95-771	7.95
37741-67	95-782	7.93
37741-67A	95-772	7.93
37741-82DL	95-783	7.32
37753-73	96-372	7.45
37754-74	96-375	7.43
37755-73	96-290	7.43
37762-52	78-436	7.51
37871-41	96-58	7.47
37904-90	96-4	7.50
37906-90	95-801	7.50
37910-90	96-561	7.56
37911-90	96-561	7.56
37913-90	96-562	7.56
37975-41	96-329	7.55
37975-90	96-562	7.56
37977-90	96-618	7.56
38005-74	96-352	7.52
38010-41	96-110	7.48
38079-72	96-536	7.52
38080-71	96-537	7.52
38130-54	96-202	7.51
38130-71	96-339	7.52
38495-58	89-213	4.22
38604-65A	47-19	4.18
38609-68	47-20	4.18
38712-68	66-76	5.38
39966-80	5-109	7.58
39976-65B	5-74	7.58
39978-58	5-75	7.58
39979-58A	5-82	7.58
39985-52	5-62	7.65
39990-65	5-138	7.58
39992-65C	5-139	7.58
39998-65	5-137	7.58
40209-55	94-167	7.62
40210-85D	94-378	7.63
40211-30	94-119	7.62
40211-55	94-122	7.62
40212-30	94-120	7.62
40251-91	94-381	7.63
40269-85A	94-271	7.59
40275-70	94-219	7.59

OEM NO.	MIDWEST PART NO.	BOOK PAGE
40275-83A	94-270	7.59
40279-91	58-284	7.62
40282-70	94-218	7.59
40284-90	58-285	7.62
40387-70	98-336	6.83
40392-70	94-263	7.59
40392-91	94-330	7.59
40520-63	95-412	6.95
40908-06	90-838	5.33
40908-08	90-840	5.33
40910-84A	33-2	5.47
40915-94	33-13	5.47
40922-79	90-410	4.33
40925-00	90-845	5.33
40954-81	94-170	7.61
40954-83	94-171	7.61
40968-04	90-846	5.33
40968-05	90-847	5.33
40968-08	90-848	5.33
40968-73	36-305	5.13
40976-86	33-201	5.25
40982-67	36-304	5.13
41110-79A	32-197	5.48
41196-73	33-182	5.30
41210-55	95-185	5.27
41400-63	90-90	5.36
41400-67	90-88	5.36
41401-37	90-53	5.36
41401-52	90-84	5.27
41404-52	90-84	5.27
41470-30	94-33	7.62
41470-62	94-85	7.62
41470-67	94-55	7.62
41470-70	94-33	7.62
41470-73	94-95	5.27
41470-73A	94-96	5.27
41470-82	94-169	7.62
41470-86	94-98	7.62
41485-30	94-142	7.58
41545-07	32-229	5.48
41547-07	32-243	5.48
41549-07	32-242	5.48
41551-52	32-104	5.27
41552-36	32-124	5.48
41552-73	32-109	5.30
41563-77A	32-196	5.48
41570-77	5-130	7.65
41576-36	5-61	7.65
41591-81	33-9	5.47
41591-90	33-16	5.47
41592-79	33-6	5.47
41594-73	33-4	5.47
41595-73	33-5	5.47
41595-86	33-7	5.47
41596-58	32-172	5.28
41596-63	32-171	5.28
41598-52	32-135	5.27
41600-36	32-126	5.37
41600-58	32-106	5.28
41600-63	32-107	5.28
41603-32	32-119	5.28
41607-83	33-8	5.47
41650-58	90-367	5.28
41650-63	90-368	5.28
41671-37	90-180	5.37
41731-82	90-345	4.58
41731-88A	90-431	4.58
41737-63	89-201	4.30
41739-84A	90-378	4.28
41740-58	90-126	5.37
41743-58	90-200	5.37
41744-58	90-198	5.37
41745-58	90-199	5.37
41747-82A	90-377	4.58
41748-63	90-64	5.37
41749-58	90-280	5.38
41750-63	90-355	5.37
41761-58	90-58	4.27
41762-58A	90-58	4.27
41764-58	90-208	4.26
41764-70	90-202	4.26
41765-58	90-197	4.26
41770-58	90-107	4.30
41801-58A	90-86	5.39
41801-63	90-89	5.39
41805-38	90-183	5.39
41808-63	90-106	5.39
41814-76	90-244	5.38
41814-76A	90-244	5.38
41835-30	90-182	5.37
41835-69	90-170	4.30
41836-63	90-354	5.37
41848-38	90-163	5.39
41848-64	90-100	5.39
42062-08	90-842	5.33
42253-67	10-30	4.35
42264-52	90-184	4.35
42269-30	90-68	4.33
42280-35	17-40	1.50
42309-70	90-352	4.59
42318-72	90-351	4.33
42333-58	90-107	4.30
42333-70	90-166	4.30
42374-77B	90-152	4.27
42374-86	90-430	4.27
42382-82B	90-429	4.27
42382-87A	90-424	4.27
42410-52	47-100	4.35
42411-70	90-167	4.30
42427-58	90-170	4.30
42453-80A	90-293	4.26
42454-80A	90-293	4.26
42455-80	78-187	4.30
42459-80B	47-107	4.34
42480-36	47-75	4.32
42480-70	47-72	4.30
42480-73	47-72	4.30
42532-82	22-111	4.26
42895-06	90-839	5.33
42895-08	90-841	5.33
43002-70	30-35	5.21
43007-40A	30-4	5.21
43018-73	30-35	5.21
43053-86	33-200	5.25
43218-72	90-351	4.33
43283-86	83-25	2.4
43307-78	90-329	4.29
43308-78	90-347	4.59
43346-83	32-192	5.48
43358-83A	33-3	5.47
43530-35A	33-24	5.28
43552-39	33-194	5.28
43557-73	90-244	5.38
43558-39	33-193	5.28
43559-73	33-187	5.27
43560-35	33-109	5.28
43563-35	33-180	5.28
43567-79	90-246	5.38
43603-78	33-183	5.30
43617-95	33-12	5.47
43648-86	33-10	5.47
43654-86A	33-1	5.47
43657-89	33-11	5.47
43662-80B	30-11	5.21
43663-80A	33-195	5.25
43674-95	33-14	5.47
43683-97	33-15	5.47
43871-52	32-133	5.29
43872-36	32-34	5.48
43875-67	32-139	5.48
43875-73	32-186	5.48
43882-48	32-111	5.28
43882-67	32-132	5.28
43883-84	32-193	5.48
43897-86	89-341	2.7
43899-86	32-230	5.49
43945-79	90-331	5.35
43946-79	90-330	5.35
43947-79	90-331	5.35
44001-78B	90-291	5.34
44006-80	90-220	5.35
44007-80	90-238	5.35
44008-80	90-219	5.35
44010-81	90-408	5.38
44016-00C	90-837	5.33
44017-00	90-843	5.33
44017-06	90-844	5.33
44022-83	90-216	5.35
44023-00C	90-831	5.33
44023-83C	90-436	5.32
44025-80	90-288	5.34
44026-80	90-288	5.34
44045-87	90-356	5.35
44046-00D	90-853	5.33
44046-08	90-832	5.33
44046-84B	90-437	5.32
44046-84C	90-437	5.32
44047-83	90-216	5.35
44050-87	90-434	5.32
44063-83	90-328	5.45
44077-88C	90-436	5.32
44080-02	90-849	5.33
44089-08	90-855	5.33
44107-72	90-300	5.38
44107-76	90-300	5.38
44109-72A	90-220	5.35
44118-80	90-221	5.35
44119-04	90-836	5.33
44121-04	90-835	5.33
44124-72	90-128	5.38
44127-72A	90-214	5.35
44129-73	90-219	5.35
44131-72	90-99	5.45
44133-72	90-214	5.35
44151-77	90-213	5.35
44153-77	90-213	5.35
44154-73	83-10	5.38
44157-77	90-438	5.35
44162-77	90-346	5.34
44166-73	90-231	5.38
44181-77A	90-445	5.35
44275-74	90-222	5.35
44277-74	90-212	5.35
44278-74	90-212	5.35
44310-77	90-349	4.59
44311-80	90-348	4.59
44331-73	90-127	5.34
44401-49B	90-92	5.39
44432-54	90-70	5.39
445672-80A	29-68	3.18
45002-41	47-21	4.18
45002-65A	47-21	4.18
45004-85	90-435	4.29
45005-85	78-200	4.29
45006-87A	90-426	4.27
45006-96	90-524	4.27
45010-73	90-224	4.29
45012-82	78-182	4.29
45013-72	90-224	4.29
45013-85	90-425	4.29
45016-72	47-23	4.16
45016-82	47-96	4.18
45016-93	47-178	4.16
45017-82	47-97	4.18
45017-93	47-179	4.16
45019-85	90-409	4.29
45024-65A	47-22	4.16
45032-82	45-34	4.28
45036-68	45-24	4.18
45036-82	45-32	4.18
45038-68	45-24	4.18
45039-68	45-24	4.18
45057-82	90-165	4.29
45063-72	90-151	4.27
45063-82A	90-240	4.27
45072-87	90-413	4.27
45072-96	90-525	4.27
45159-50	90-232	4.22
45297-73	95-206	3.20
45378-87	95-401	3.20
45387-83	95-400	3.20
45387-87	95-401	3.20
45400-75	95-205	3.20
45404-75	27-61	3.21
45408-75	27-88	3.13
45411-82	27-121	3.21
45415-82	27-120	3.21
45418-80	27-118	3.13
45583-83	90-305	4.58
45640-88B	29-68	3.18
45670-80	41-904	3.15
45700-48	29-45	3.18
45716-71	27-62	3.19
45717-63	27-106	3.19
45718-60	41-127	3.19
45718-71	27-62	3.19
45754-49	27-65	3.15
45754-60	27-65	3.15
45776-49	27-53	3.15
45821-74	90-129	5.38
45821-75	90-129	5.38
45822-74	90-130	5.38
45822-75	90-130	5.38
45823-49	27-96	3.11
45824-49	27-95	3.15
45831-77	27-119	3.13
45838-77	27-54	3.15
45839-77	27-67	3.15
45842-77	27-109	3.21
45843-77	95-326	3.20
45849-49	95-177	3.20
45849-73	95-438	3.20
45849-75	95-439	3.20
45849-77	95-360	3.20
45849-84	95-440	3.20
45849-84A	95-441	3.20
45849-87	95-442	3.20
45852-48	95-111	3.20
45875-84	95-399	3.10
45927-73	95-206	3.20
45964-49	27-71	3.21
45975-71	95-113	3.20
45983-73	27-60	3.21
45993-73	27-63	3.15
46018-77	90-302	5.34
46019-77	90-302	5.34
46100-48	27-68	3.15
46161-49	27-68	3.15
46172-48	27-107	3.15
47116-77	23-134	4.42
47117-77	23-134	4.42
47300-88T	89-339	2.6
47510-58	83-7	2.6
47513-58	83-9	2.6
47517-58	83-8	2.6
47519-58	95-196	5.30
47519-72	95-235	5.27
47519-83A	95-370	5.30
47577-86	5-147	7.65
47698-86B	96-612	2.5
48031-89A	83-20	2.7
48311-60	5-34	3.15
48330-48A	27-69	3.15
48361-80	27-97	3.22
48365-48A	27-97	3.22
49004-00	105-19	2.9
49004-90	105-13	2.9
49007-90A	105-37	2.9
49010-93	105-36	2.9
49016-72C	105-12	2.9
49028-85T	22-1	4.45
49031-84T	22-3	7.46
49038-58	105-15	2.9
49038-58B	105-1	2.9
49040-79	105-2	2.9
49053-04	23-144	4.43
49184-88	105-16	2.9
49200-07	105-34	2.9
50235-63	5-133	8.5
50599-89T	123-21	4.48
50603-40	123-5	4.48
50603-74A	123-10	4.48
50614-66T	123-11	4.48
50620-74	123-12	4.48
50646-82	22-114	4.45
50900-72T	23-140	4.43
50904-85T	66-213	4.43
50905-85T	66-214	4.43
50907-69A	22-98	4.45
50939-52	22-113	4.44
50940-52	22-46	4.45
50970-52	123-15	4.47
50973-65	22-123	4.42
51674-25	82-80	11.4
52683-74	22-124	4.42
52702-59A	23-108	2.7
53899-86	32-230	5.49
54515-56B	5-106	2.22
54515-58A	5-111	2.22
54515-67	5-102	2.22
54515-73	5-104	2.22
54516-72	5-107	2.22
54517-58	5-112	2.22
54517-67	5-103	2.22
56098-80	34-93	4.9
56099-80	34-93	4.9
56104-74	34-77	4.9
56116-77	34-101	4.9
56117-77	34-101	4.9
56121-60A	29-45	3.18
56153-73	34-89	4.11
56158-49	34-91	4.11
56158-73	34-89	4.11
56159-73	34-89	4.11
56205-62A	35-47	4.14
56220-81B	35-65	4.15
56238-62	35-51	4.14
56395-81	35-65	4.15
56397-74E	35-54	4.16
56495-02	121-21	11.6
56500-79	35-36	4.15
56590-60	89-258	4.9
56802-06	121-24	11.6
58206-57	89-360	2.16
59000-36	19-64	2.14
59007-73	19-43	2.14
59007-73B	19-43	2.14
59012-40	19-64	2.14
59082-79	8-125	1.26
59126-86B	19-120	2.9
59139-89	19-85	2.14
59140-85T	8-75	1.26
59176-93	19-172	2.13
59205-57	89-360	2.16
59206-57	89-360	2.16
59281-85T	89-163	2.16
59283-85T	89-162	2.16
59601-79B	19-79	2.9
59604-39	19-65	2.11
59604-55	19-84	2.11
5960W	5-136	2.23
59611-67A	19-22	2.11
59611-73A	19-57	2.11
59612-41	19-77	2.11
59634-81A	19-76	2.12

OEM NO.	MIDWEST PART NO.	BOOK PAGE
59658-79	8-126	1.36
59674-81A	19-75	2.11
59679-79A	19-62	2.11
59795-52A	5-99	2.16
59924-80	19-60	2.14
59928-73	104-28	2.17
59929-73	104-28	2.17
59932-77	104-27	2.17
59933-77	104-27	2.17
59940-79	34-92	4.9
59941-79	34-92	4.9
59960-80	104-29	2.17
59961-80	104-29	2.17
59964-86A	104-23	2.17
59969-86A	104-23	2.17
59992-55A	11-44	1.23
59995-55A	11-44	1.23
59998-75T	11-99	1.23
60161-06	121-23	11.6
60302-63	9-58	7.89
60302-73T	9-55	7.89
60414-82	88-61	7.85
60441-82A	88-57	7.85
60507-86A	88-59	7.86
60516-65A	53-295	1.46
60533-86	9-65	7.89
60539-89	78-437	7.92
60540-65A	78-438	7.83
60543-89	88-66	7.86
60557-36	89-13	7.87
60559-80	78-439	1.54
60567-36	78-440	7.93
60567-65B	78-441	7.92
60572-36	89-21	7.87
60572-65	89-90	7.88
60572-78	89-90	7.88
60579-74	89-183	7.88
60605-79B	88-50	7.85
60629-55	78-442	7.83
60641-74	95-786	7.93
60645-65	78-149	1.54
60664-85B	88-54	7.85
60678-85	95-452	7.87
61000-54C	20-20	8.4
61102-73	21-38	8.6
61102-83A	21-172	8.6
61103-65	21-107	8.6
61103-72P	21-38	8.6
61103-73	21-107	8.6
61103-73A	21-107	8.6
61103-83	21-171	8.6
61211-79	20-60	8.2
61211-84A	20-65	8.2
61213-83	20-60	8.2
61216-69	20-59	8.2
61218-67A	20-59	8.2
61228-84	20-65	8.2
61229-79	20-60	8.2
61230-69	20-60	8.2
61426-67A	20-59	8.2
61769-47	21-111	8.46
62096-69	21-262	8.9
62103-65	21-118	8.6
62125-55	21-23	8.9
62125-55B	21-141	8.9
62162-75	21-261	8.9
62163-75	21-106	8.9
62375-57	21-304	8.42
62423-90	78-457	7.95
62432-93	78-460	7.95
62498-00	26-100	8.42
62498-89A	26-112	8.41
62498-91	26-112	8.41
62504-65A	26-110	8.42
62507-67A	26-95	8.41
62534-65	89-252	8.42
62563-65	5-80	8.5
62563-65A	5-80	8.5
62575-36	89-36	1.4
62576-65A	47-109	4.22
62584-58	5-122	8.42
62610-52A	21-189	8.42
62625-36	21-188	8.44
62635-79T	21-90	8.44
62668-87T	21-91	8.44
62702-52	95-773	6.110
62704-84	5-143	8.41
62707-84	5-145	8.41
62783-66A	71-137	8.46
62785-66A	71-137	8.46
63525-92	95-774	6.116
63529-57	95-775	6.110
63533-41	21-123	8.42
63578-52	21-207	8.42
63782-80	25-60	8.49
63796-77	25-78	8.49
63812-90	25-132	8.49
63813-90	25-79	8.49
63858-49	78-444	6.66
6469HW	41-398	6.37
65276-62	66-16	10.15
65276-63	66-10	10.15
65324-93A	78-445	10.16
65325-83	66-96	10.16
65328-83	66-203	10.16
65519-52	66-17	10.15
65815-77A	8-101	1.31
65834-68X	78-446	10.18
66105-77	5-129	1.5
66191-73	14-21	1.5
66204-74	14-20	1.5
66212-65	14-28	1.4
66225-73	14-26	1.43
66328-82T	89-320	13.14
66351-82	89-242	13.14
66356-82	89-242	13.14
66367-73	89-119	1.5
66369-67	89-230	1.5
66369-70	89-181	1.5
66370-65	89-120	1.5
66373-36	89-3	1.4
66373-54	89-3	1.4
66378-70	89-255	1.5
66383-70A	5-31	1.5
66470-67	5-30	1.5
66470-70	5-32	1.5
66476-73	5-33	1.5
6653HW	32-170	5.30
66717-65	7-25	1.13
67004-53	57-88	4.51
67004-68	57-92	4.51
67004-68A	57-82	4.51
67027-81C	57-167	4.49
67027-91A	57-168	4.49
67073-81	57-127	4.49
67073-87A	57-122	4.49
67120-84B	57-125	4.49
67124-80	57-91	4.49
67125-86A	57-124	4.49
67127-73	57-90	4.49
67127-84A	57-126	4.49
67130-36	57-95	4.49
67132-85A	57-123	4.49
67141-36	78-447	7.32
67190-89	57-215	4.53
67210-73	57-77	4.52
67215-68	57-96	4.51
67217-68	57-96	4.51
67260-96	57-214	4.53
67271-94	57-213	4.53
6762B	91-322	6.62
67712-60A	86-70	1.15
67733-72	8-78	1.13
67743-75	8-89	1.13
67752-77T	89-107	1.15
67773-80A	11-113	1.16
67808-86	89-349	3.21
67816-86	89-349	3.21
67820-86	89-349	3.21
67847-60	89-257	1.15
67848-60	89-257	1.15
68002-47	8-70	1.19
68003-47	8-56	1.21
68008-73A	8-74	1.22
68010-64B	8-59	1.21
68027-73	86-42	1.22
68034-77	86-42	1.22
68090-47	86-34	1.21
68090-69	86-41	1.21
68123-73	78-169	1.22
68400-86	8-88	1.31
68404-86	8-99	1.31
68450-34	8-75	1.26
68457-86	86-84	1.31
68462-49	6-54	1.13
68480-73	11-79	1.32
68480-93	11-98	1.30
68483-73	86-50	1.31
68486-82A	11-80	1.32
68487-82	11-80	1.32
68493-87	11-81	1.30
68510-74A	11-72	1.29
68514-73	8-71	1.32
68515-77A	8-71	1.32
68518-68	11-101	1.30
68519-68	11-103	1.30
68528-77A	11-83	1.30
68557-70A	8-85	1.31
68570-63	86-88	1.32
68571-63A	86-87	1.31
68603-62	11-54	1.14
68604-62	11-54	1.14
68652-64B	8-194	1.12
68671-69	8-138	1.14
68972-00	8-188	1.29
70060-66	17-35	1.51
70069-65A	18-106	1.6
70097-75	18-107	1.6
70124-75	17-74	1.48
701A	41-267	7.46
70209-65	18-108	1.6
70214-80A	18-260	1.9
70320-70	18-190	1.9
70320-73	18-191	1.9
70320-78	18-258	1.9
70320-80	18-259	1.9
70321-48	18-187	1.9
70321-58	18-188	1.9
70326-70	18-192	1.9
70326-73	18-193	1.9
70934-68A	21-115	4.53
71146-96	86-119	4.53
71241-68B	89-281	4.53
71254-96	89-470	4.53
71301-77	89-111	4.52
71302-93	57-216	4.53
71313-96	17-115	1.48
71425-77	17-60	1.48
71428-90A	17-84	1.48
71455-67	53-134	1.45
71463-73A	53-287	1.45
71465-85T	53-288	1.44
71469-65	53-288	1.44
71469-65B	53-456	1.44
71484-72A	17-51	1.51
71500-36A	17-45	1.48
71501-36A	17-45	1.48
71501-73	17-45	1.48
71501-93	17-115	1.48
71534-72	17-52	1.51
71535-72	17-50	1.51
71539-73B	47-121	4.17
71546-75A	17-54	1.51
71547-75A	17-53	1.51
71563-82	47-167	4.17
71564-82	47-166	4.17
71567-82	47-168	4.17
71568-82A	47-169	4.17
71589-92	17-91	1.9
71589-96	17-105	1.9
71590-96	17-100	1.9
71591-92	17-92	1.9
71591-96	17-106	1.9
71597-92	17-93	1.9
71597-96	17-107	1.9
71598-96	17-108	1.9
71599-92	17-94	1.9
71600-39	17-57	1.52
71800-26A	17-35	1.51
71840-29	17-36	1.51
72001-69B	17-49	1.51
72002-51A	17-43	1.49
72003-34	17-40	1.50
72004-70	17-58	1.50
72005-73A	17-75	1.50
72023-51A	17-44	4.33
72023-71	17-44	4.33
72102-94GY	18-569	1.53
72103-94GY	18-602	1.53
72104-94GY	18-604	1.53
72106-94GY	18-606	1.53
72108-94GY	18-608	1.53
72109-94GY	18-610	1.53
72112-94GY	18-612	1.53
72113-94GY	18-614	1.53
72114-94GY	18-616	1.53
72116-94GY	18-618	1.53
72118-94GY	18-620	1.53
72119-94GY	18-622	1.53
72190-98	18-567	1.53
72201-69A	17-49	1.51
72341-56A	53-406	9.19
74191-98	18-568	1.53
74461-03A	57-1	4.50
74512-79A	53-219	1.35
74516-86	53-264	1.35
74519-88	53-322	1.35
74533-75B	5-85	1.36
74577-97	89-526	1.34
74578-97	89-525	1.34
74579-97	89-527	1.34
74587-94	39-144	1.10
74589-73	17-76	1.10
74589-73A	17-76	1.10
74597-01	89-537	1.34
74599-77	17-62	1.10
74599-77B	17-62	1.10
74600-94	39-143	1.10
74600-97A	39-147	1.10
7848W	96-88	7.50
80040-81	12-251	8.36
8095A	32-119	5.28
83162-51	95-777	6.21
83566-51	90-350	4.59
85210-42A	116-6	2.23
8876A	96-608	7.3
90238-00	105-42	2.9
9025A	95-316	7.34
90345-90A	105-41	2.9
91733-85	58-267	7.62
91775-51	5-96	9.23
91875-70A	46-50	4.37
91879-67	46-52	4.37
94700-65	97-2	12.14
9540A	95-339	3.20
96295-65	91-241	6.92
98170-88T	55-8	11.9
AC 152103	53-341	1.34
AC 152107	53-345	1.34
AC 152108	53-346	1.34
AC 181100	17-43	1.49
AC 181101	17-44	4.33
AC 181102	17-61	1.49
AC 181103	17-64	1.49
AC 181104	17-65	1.49
AC 192300	53-144	1.37
AC 201101	53-219	1.35
AC 201118	53-264	1.35
AC 201122	53-322	1.35
AC 33001	90-280	5.38
AC 33002	90-126	5.37
AC 33007	90-64	5.37
AC 40111C	53-284	1.44
AC 40114C	53-286	1.44
AC 40116	53-368	1.45
BT 81E	45-23	4.18
BT 81-T	45-33	4.18
BT HD-1	97-126	12.12
BT HD-2	97-127	12.10
CCI12-921	27-108	3.21
CCI25-536	17-72	1.49
CS MT-134	64-319	10.14
CS RFB-2	104-3	2.16
CS SS-134	64-300	10.14
CY 6930-5	41-500	13.8
CY 6932-5	41-501	13.8
CY 6933-4	41-502	13.8
CY 6934-3	41-503	13.8
CY 6935-2	41-504	13.8
CY 6936-1	41-505	13.8
CY 6937-1	41-506	13.8
CY 6938-1	41-507	13.8
CY 6942-5	41-508	13.8
CY 6943-4	41-509	13.8
CY 6944-3	41-510	13.8
CY 6945-2	41-511	13.8
CY 6946-1	41-512	13.8
CY 6947-1	41-513	13.8
CY 6948-1	41-514	13.8
CY 7009-1	41-127	3.19
CY 7017-16	41-547	13.10
CY 7101-1	94-139	7.58
CY 7106-1	41-855	13.8
CY 7110-8	41-349	6.39
CY 7114-2	41-551	13.10
CY 7115-2	41-620	13.9
CY 7116-14	41-615	13.9
CY 7120-4	91-269	6.41
CY 7122-4	91-267	6.46
CY 7123-4	91-268	6.46
CY 7130-10	41-546	13.10
CY 7131-12	91-263	6.45
CY 7132-12	91-264	6.45
CY 7134-8	89-60	6.44
CY 7135-8	89-59	6.44
CY 7136-14	41-618	13.9
CY 7137-22	41-584	13.10
CY 7139-4	41-610	13.9
CY 7148-3	21-111	8.46
CY 7156-2	41-343	7.46
CY 7206-2	41-598	13.9
CY 7351-2	41-267	7.46
CY 7354-2	21-72	8.44
CY 7401-2	41-623	13.9
CY 7410-1	95-110	6.92
CY 7412-24	41-582	13.10
CY 7417-13	41-575	13.10
CY 7501-1	41-859	13.8
CY 7505-4	91-266	6.46
CY 7506-4	91-261	6.46
CY 7507-20	89-61	6.44
CY 7508-20	89-62	6.44
CY 7509-20	89-63	6.44
CY 7619-1	27-62	3.19
CY 7620-1	27-65	3.15

OEM NO.	MIDWEST PART NO.	BOOK PAGE
CY 7630-3	41-622	13.9
CY 7704-2	5-61	7.65
CY 7716-2	21-116	4.52
CY 7801-2	21-133	8.11
CY 7803-11	41-560	13.10
CY 7808-4	91-512	6.44
CY 7811-14	96-193	7.87
CY 7812-12	96-194	7.87
CY 7813-8	41-548	13.10
CY 7816-1	58-110	7.80
CY 7817-1	58-111	7.80
CY 7822-12	89-133	6.44
CY 7823-12	89-134	6.44
CY 7824-12	89-135	6.44
CY 7825-20	93-421	6.37
CY 7826-1	94-138	7.58
CY 7827-12	41-576	13.10
CY 8005-12	17-99	1.10
CY 8016-4	41-549	13.10
CY 8101-6	5-77	7.65
CY 8104-16	41-401	6.60
CY 8111-12	40-317	6.97
CY 8114-1	98-299	6.92
CY 8121-34	41-564	13.10
CY 8122-34	41-875	13.12
CY 8124-34	41-565	13.10
CY 8127-34	41-566	13.10
CY 8140-34	41-881	13.12
CY 8142-34	41-571	13.10
CY 8143-34	41-882	13.12
CY 8147-13	41-870	13.12
CY 8151-2	53-195	1.36
CY 8153-2	53-194	1.36
CY 8160-4	32-119	5.28
CY 8166-12	41-540	13.7
CY 8167-12	41-541	13.7
CY 8168-6	41-542	13.7
CY 8169-6	41-543	13.7
CY 8170-10	41-398	6.37
CY 8200-10	33-118	5.28
CY 8204-4	91-315	6.48
CY 8206-9	5-94	2.7
CY 8212-3	12-177	8.36
CY 8213-8	21-161	8.42
CY 8221-20	41-987	6.37
CY 8224-8	41-779	13.9
CY 8226-1	27-53	3.15
CY 8233-1	27-67	3.15
CY 8400-8	41-418	13.10
CY 8404-27	41-594	13.10
CY 8405-2	41-592	7.20
CY 8408-1	94-140	7.58
CY 8410-8	96-346	7.53
CY 8412-1	96-62	7.53
CY 8413-8	41-588	13.9
CY 8416-5	41-521	13.8
CY 8419-2	41-524	13.8
CY 8420-1	41-525	13.8
CY 8421-1	41-526	13.8
CY 8422-1	41-527	13.8
CY 8427-2	41-531	13.8
CY 8428-1	41-532	13.8
CY 8429-1	41-533	13.8
CY 8430-1	41-534	13.8
CY 8440-12	41-686	13.10
CY 8442-19	41-692	13.10
CY 8453-11	41-708	13.9
CY 8454-8	41-701	13.9
CY 8459-4	41-713	13.9
CY 8461-2	41-700	13.9
CY 8475-4	41-706	13.9
CY 8478-27	41-691	13.10
CY 8480-8	41-563	13.10
CY 8481-20	41-581	13.10
CY 8482-20	41-684	13.10
CY 8495-1	41-983	7.32
CY 8600-8	41-943	6.58
CY 8601-8	41-944	6.58
CY 8606-6	41-545	13.9
CY 8608-36	40-318	13.12
CY 8610-1	41-979	13.8
CY 8614-4	41-896	6.39
CY 8623-2	82-78	11.4
CY 8701-2	41-886	13.9
CY 8703-2	41-888	6.23
CY 8704-2	41-889	6.97
CY 8705-2	41-890	6.97
CY 8706-6	41-891	6.97
CY 8707-6	41-892	6.97
CY 8714-20	41-766	6.58
CY 8715-4	32-191	5.50
CY 8716-1	27-54	3.15
CY 8722-16	41-554	13.9
CY 8724-18	41-553	13.10
CY 8726-8	41-768	6.64
CY 8728-12	95-435	6.45
CY 8729-12	95-436	6.45
CY 8730-8	41-587	13.9
CY 8734-24	91-665	6.62
CY 8738-10	40-320	5.20
CY 8739-10	41-751	13.11
CY 8740-19	41-989	6.97
CY 8745-13	41-770	6.97
CY 8747-12	41-772	6.97
CY 8748-12	41-784	13.11
CY 8751-19	41-596	13.10
CY 8755-12	41-780	6.87
CY 8757-8	41-757	13.9
CY 8759-5	41-752	5.20
CY 8760-16	41-767	6.59
CY 8765-2	41-774	13.9
CY 8768-3	32-190	5.30
CY 8769-3	32-170	5.30
CY 8773-12	123-22	4.47
CY 8774-18	123-23	4.47
CY 8786-5	41-802	13.9
CY 8790-28	41-800	13.9
CY 8791-10	41-792	5.20
CY 8792-5	41-755	5.20
CY 8793-5	41-754	5.20
CY 8794-10	41-756	5.20
CY 8798-12	96-195	7.87
CY 8806-17	5-164	2.20
CY 8813-4	27-101	3.15
CY 8817-10	41-796	13.9
CY 8820-9	41-782	7.45
CY 8824-8	53-406	9.19
CY 8831-10	41-897	5.20
CY 8834-10	41-898	7.64
CY 8835-10	41-899	7.64
CY 8842-10	41-900	7.62
CY 8847-5	41-901	5.20
CY 8850-4	123-15	4.47
CY 8851-4	123-14	4.47
CY 8865-11	41-921	13.9
CY 8866-8	41-929	13.9
CY 8867-4	41-923	13.9
CY 8869-13	41-927	13.9
CY 8874-2	82-80	11.4
CY 8879-30	41-995	2.17
CY 8881-18	41-996	2.17
CY 8909-13	41-939	13.11
CY 8911-5	41-919	13.10
CY 8915-17	41-915	13.10
CY 8916-17	41-935	13.11
CY 8919-19	41-936	13.11
CY 8921-5	41-913	13.10
CY 8931-16	41-937	6.66
CY 8934-2	5-146	7.65
CY 9000-4	41-906	13.9
CY 9002-4	41-908	6.38
CY 9106-8	83-11	2.6
CY 9202-12	89-365	6.44
CY 9213-4	91-634	6.44
CY 9424-8	93-618	6.66
JM 1046-36A	95-163	6.83
JM 18492-48	91-283	6.62
JM18492-48+005	91-669	6.62
JM18508-52B	91-284	6.70
JM18522-53	91-285	6.62
JM18522-53+005	91-289	6.62
JM18522-53PG	91-636	6.48
JM 18523-86	91-291	6.68
JM 23901-81	98-420	6.83
JM 23909-80	98-339	6.25
JM 23960-54	98-345	6.83
JM23960-80A-3	98-361	6.83
JM 23961-41-1	98-465	6.83
JM 23961-41-3	98-344	6.83
JM 23961-41S	98-418	6.83
JM23961-80/80A-3	98-354	6.83
JM23961-80AS	98-419	6.83
JM 23962-40	98-346	6.83
JM 23969-83	98-421	6.25
JM 24000-29	98-317	6.85
JM 24000-57	98-318	6.83
JM 24000-75	98-301	6.83
JM 24000-80	98-425	6.83
JM 24001-30	98-285	6.83
JM 24001-56	98-264	6.83
JM 24001-65	98-293	6.83
JM 24001-70	98-294	6.83
JM 24001-72	98-295	6.83
JM 24005-37	98-321	6.85
JM 24005-57	98-319	6.83
JM 24006-37	98-320	6.83
JM24006-54A	98-289	6.83
JM 24006-58	98-256	6.83
JM 24006-73	98-291	6.83
JM24006-80/83	98-355	6.83
JM 24006-87	98-427	6.83
JM 24007-39	98-286	6.83
JM 24010-BLU	98-446	6.80
JM 24010-BR	98-449	6.80
JM 24010-GR	98-447	6.80
JM 24010-OR	98-443	6.80
JM 24010-RE	98-445	6.80
JM 24010-WH	98-448	6.80
JM 24010-YE	98-450	6.80
JM 24016-80	98-422	6.25
JM 24020-51	98-312	6.83
JM 24023-36	98-424	6.83
JM 24023-54	98-302	6.80
JM 24040-78	98-451	6.80
JM 24041-78	98-452	6.80
JM 24042-78	98-453	6.80
JM 24043-78	98-454	6.80
JM 24044-78	98-455	6.80
JM 24045-78	98-456	6.80
JM 24046-78	98-457	6.80
JM 24599-40	95-76	6.92
JM 24599-58A	95-310	6.92
JM 24599-58B	95-429	6.23
JM 24621-40	95-62	6.92
JM25581-36STD	95-108	6.87
JM25593-57STD	95-335	6.96
JM 25785-30A	95-343	6.87
JM 25856-KIT	95-418	6.87
JM 26315-68A	98-63	6.99
JM 26317-68A	98-64	6.99
JM 26326-62A	98-65	6.98
JM 26328-74	98-66	6.98
JM 26346-36	98-309	6.98
JM26346-69/70	98-334	6.34
JM 33031-36	96-581	7.32
JM 33031-76E	96-582	7.32
JM 33031-76L	96-583	7.32
JM 33031-80	96-584	7.32
JM33096-54AL	96-585	7.45
JM 33438-50-2	95-414	7.45
JM 34088-87	96-638	7.6
JM35105-52STD	96-281	7.34
JM 35125-37	95-312	7.32
JM 35614-80	96-257	7.32
JM 40520-63	95-412	6.95
MU 02001	115-9	11.10
MU 02002	115-10	11.10
MU 02003	115-12	11.10
MU 04201	55-7	11.9
MU 04215	55-8	11.9
MU 10201	5-129	1.5
MU 11606	8-85	1.31
MU 11608	8-88	1.31
MU 11719	86-41	1.21
MU 11728	86-42	1.22
MU 11729	86-50	1.31
MU 11744	86-83	1.31
MU 11748	86-87	1.31
MU 13022	11-201	1.14
MU 13364	17-100	1.9
MU 15117	17-89	1.51
MU 15118	17-90	1.51
MU 15201	17-40	1.50
MU 15209	17-50	1.51
MU 15210	17-52	1.51
MU 16026	53-452	9.15
MU 16034	53-392	9.16
MU 16034A	53-392	9.16
MU 16035	53-393	9.16
MU 16035A	53-393	9.16
MU 16036	53-394	9.16
MU 16036A	53-394	9.16
MU 16039	53-396	9.16
MU 16042	53-399	9.5
MU 16043	53-400	9.5
MU 16044	53-397	9.16
MU 16044A	53-397	9.16
MU 16045	53-398	9.16
MU 16045A	53-398	9.16
MU 16046	53-395	9.16
MU 16054	53-29	9.14
MU 16055	53-230	9.14
MU 16056	53-297	9.14
MU 16100	5-86	9.19
MU 16102	89-70	9.18
MU 16105	89-47	9.19
MU 16107	5-113	9.19
MU 16111	89-71	9.18
MU 16115	89-307	9.17
MU 16121	89-301	9.19
MU 16130	53-401	9.5
MU 16601	53-406	9.19
MU 17053	70-120	9.9
MU 17059	18-181	9.21
MU 17069	70-138	1.43
MU 17070	70-130	1.43
MU 17309	53-194	1.36
MU 17511A	53-209	9.4
MU 17512	53-210	9.4
MU 17513F	53-211	9.4
MU 17514	53-246	9.4
MU 17516F	91-352	9.10
MU 17524	53-244	9.10
MU 17534F	53-208	9.4
MU 17535	53-151	9.11
MU 17545	53-389	9.5
MU 17546	53-390	9.5
MU 17547	53-404	9.5
MU 17601	53-13	9.10
MU 17602	53-12	9.10
MU 17603	53-20	9.11
MU 17605	53-14	9.13
MU 17606	53-21	9.11
MU 17616	53-388	9.10
MU 17716	53-287	1.45
MU 17732	70-133	1.43
MU 18040E	3-170	9.24
MU 18602	18-234	9.23
MU 18700	18-103	9.21
MU 18717	18-110	9.21
MU 18800	5-96	9.23
MU 18903	18-276	9.23
MU 20004	85-183	2.2
MU 22803	104-3	2.16
MU 26605	105-12	2.9
MU 26606	105-13	2.9
MU 26708	121-1	11.6
MU 27900	82-12	11.4
MU 27901	82-67	11.4
MU 27902	82-74	11.4
MU 27903	82-71	11.4
MU 27904	82-72	11.4
MU 27905	82-73	11.4
MU 27906	82-16	11.4
MU 27907	82-76	11.4
MU 27908	82-78	11.4
MU 27910	82-75	11.4
MU 28225	68-116	11.5
MU 29201	116-6	2.23
MU 29223	97-2	12.14
MU 29404	5-105	2.22
MU 29405	5-112	2.22
MU 29410	83-8	2.6
MU 29501	5-102	2.22
MU 29502	5-104	2.22
MU 29505	5-111	2.22
MU 31001	97-14	12.9
MU 31002	97-15	12.9
MU 31004	97-16	12.9
MU 36632	27-101	3.15
MU 43010	47-180	4.16
MU 43015	47-179	4.16
MU 45408	90-240	4.27
MU 45525	90-329	4.29
MU 48300	89-116	8.11
MU 48301	89-191	8.11
MU 48304	89-169	8.11
MU 48307	89-145	8.11
MU 51201	2-25	5.51
MU 51203	2-27	5.51
MU 56428	33-9	5.47
MU 57309	33-182	5.30
MU 57310	33-184	5.27
MU 57317	95-185	5.27
MU 57339	33-3	5.47
MU 57389	33-2	5.47
MU 57403	90-126	5.37
MU 57412	33-14	5.47
MU 57413	33-15	5.47
MU 57611	90-127	5.34
MU 57621	90-212	5.35
MU 57633	90-128	5.38
MU 58302	90-346	5.34
MU 58324	40-320	5.20
MU 58900	90-216	5.35
MU 60000	41-111	6.37
MU 60003	93-772	6.30
MU 60032	93-421	6.37
MU 60046	41-779	13.9
MU 60057	41-584	13.10
MU 60092	41-768	6.64
MU 60098	41-767	6.59
MU 60123	41-112	6.37
MU 60222	91-267	6.46
MU 60223	91-280	6.46
MU 60224	91-262	6.46
MU 60225	91-261	6.46
MU 60726	97-57	12.9
MU 62259	93-795	6.51
MU 62260	93-796	6.51
MU 62261	93-797	6.51
MU 62262	93-798	6.51
MU 64610	95-602	6.25
MU 64611	95-603	6.25
MU 64612	95-604	6.25

OEM NO.	MIDWEST PART NO.	BOOK PAGE
MU 64613	95-605	6.25
MU 65337	41-881	13.12
MU 65340	41-401	6.60
MU 65378	98-490	6.23
MU 65379	12-241	8.33
MU 65380	12-266	8.33
MU 65412	98-511	6.23
MU 66202	41-780	6.87
MU 66219	98-374	6.76
MU 66220	98-375	6.76
MU 66221	98-376	6.76
MU 66222	98-377	6.76
MU 66223	98-378	6.76
MU 66224	98-379	6.76
MU 66225	98-380	6.76
MU 66229	98-372	6.87
MU 66716	89-128	9.18
MU 70006	96-293	7.40
MU 70023	96-421	7.40
MU 70200	96-294	7.41
MU 70401	78-465	7.37
MU 70420	97-3	12.10
MU 70421	97-126	12.12
MU 70422	97-127	12.10
MU 71506	41-267	7.46
MU 71511	96-172	7.32
MU 71515	96-174	7.45
MU 71516	96-167	7.19
MU 72230	41-870	13.12
MU 72640	96-474	7.34
MU 73013	96-352	7.52
MU 73042	96-13	7.55
MU 73226	96-86	7.48
MU 73236	96-460	7.57
MU 73913	96-451	7.57
MU 74609	95-425	7.32
MU 74613	95-427	7.32
MU 74702	95-724	7.94
MU 75416	41-898	7.64
MU 75805	5-82	7.58
MU 75806	5-75	7.58
MU 75808	5-109	7.58
MU 75814	5-146	7.65
MU 78559	41-936	13.11
MU 78560	41-935	13.11
MU 78909	95-712	7.94
MU 80002	21-118	8.6
MU 80012	21-166	8.7
MU 80019	21-250	8.7
MU 80020	21-249	8.7
MU 80021	21-107	8.6
MU 80022	21-38	8.6
MU 80026	21-172	8.6
MU 80027	21-171	8.6
MU 80202	21-106	8.9
MU 80203	21-134	8.9
MU 80204	21-141	8.9
MU 80205	21-160	8.9
MU 80601	21-1	8.10
MU 80606	5-64	8.5
MU 80609	21-133	8.11
MU 80616	5-80	8.5
MU 80627	5-132	8.5
MU 80629	5-135	8.5
MU 80633	5-165	8.5
MU 81003	20-59	8.2
MU 81004	20-60	8.2
MU 81006	20-53	8.4
MU 81007	20-61	8.4
MU 81013	20-66	8.4
MU 81014	20-62	8.2
MU 81015	20-63	8.2
MU 81038	20-65	8.2
MU 81039	20-66	8.4
MU 82063	42-129	8.18
MU 82082	39-409	8.30
MU 82083	39-410	8.30
MU 82084	39-411	8.30
MU 82087	42-152	8.24
MU 82088	42-153	8.24
MU 82101	39-369	8.31
MU 82142	39-344	8.29
MU 82301	39-355	8.30
MU 82303	39-357	8.30
MU 82304	39-358	8.30
MU 82306	39-384	8.31
MU 82307	12-247	8.27
MU 82409	78-111	8.25
MU 82618	39-7	8.18
MU 82624	39-380	8.18
MU 82626	39-382	8.18
MU 82900	95-321	8.32
MU 82904	78-210	8.33
MU 82905	66-99	8.32
MU 82917	95-403	8.33
MU 82925	69-90	8.33
MU 82926	69-91	8.23
MU 83002	79-10	8.10
MU 83003	79-11	8.10
MU 83010	79-12	8.10
MU 83011	79-13	8.10
MU 83015	71-141	8.46
MU 83016	71-144	8.46
MU 83017	71-142	8.46
MU 83018	71-145	8.46
MU 83019	71-143	8.46
MU 83020	71-146	8.46
MU 83100	71-137	8.46
MU 83101	71-138	8.46
MU 83102	71-124	8.45
MU 83500	21-145	8.47
MU 83516	21-173	8.47
MU 83518	21-146	8.47
MU 83520	21-174	8.47
MU 83539	21-263	8.47
MU 83540	21-264	8.47
MU 84001	12-113	8.36
MU 84003	12-117	8.36
MU 84060	12-191	8.39
MU 84063	12-115	8.39
MU 84064	12-105	8.39
MU 84065	12-75	8.39
MU 84067	12-201	8.39
MU 84068	12-76	8.39
MU 84300	12-177	8.36
MU 84546	12-126	8.39
MU 84547	12-127	8.39
MU 84548	12-128	8.39
MU 84549	12-129	8.39
MU 84550	12-130	8.39
MU 84552	12-181	8.39
MU 84553	12-231	8.39
MU 84555	12-131	8.39
MU 85009	21-189	8.42
MU 85104	21-161	8.42
MU 85105	21-111	8.46
MU 85109	95-127	8.46
MU 85131	21-211	8.53
MU 85133	21-207	8.42
MU 85134	21-163	8.42
MU 85135	21-164	8.42
MU 85136	21-32	8.42
MU 85140	89-252	8.42
MU 85141	21-239	8.46
MU 85203	21-305	8.44
MU 85206	21-238	8.53
MU 85207	21-237	8.53
MU 86013	26-113	8.41
MU 86016	26-110	8.42
MU 86028	26-118	8.42
MU 86030	26-119	8.41
MU 87103	25-60	8.49
MU 87104	25-78	8.49
MU 87107	25-77	8.49
MU 87108	25-116	8.44
MU 87110	25-86	8.50
MU 87113	25-122	8.49
MU 87114	25-123	8.49
MU 87121	25-79	8.49
MU 87122	25-132	8.49
MU 87202	25-85	8.48
MU 88501	21-90	8.44
MU 90101	62-616	10.10
MU 90317	62-623	10.10
MU 90322	62-626	10.10
MU 90406	62-632	10.10
MU 95015	64-105	10.15
MU 95016	64-190	10.15
MU 95017	64-45	10.15
MU 95018	64-47	10.15
MU 95104	66-96	10.16
MU 97003	64-3	10.14
MU 97007	64-369	10.10
MU 97012	64-368	10.14
MU 97071	64-319	10.14
MU 97073	64-300	10.14
MU 98004	66-45	8.32
MU 98010	66-16	10.15
MU 98011	66-17	10.15
MU 98012	66-18	10.15
MU 98014	66-10	10.15
MU 98015	66-61	10.15
MU 98027	66-203	10.16
R1 04-101	55-8	11.9
R1 08-007	30-4	5.21
R1 08-019	31-80	5.21
R1 08-023	31-83	5.21
R1 08-024	31-82	5.21
R1 08-025	31-81	5.21
R1 08-026	31-85	5.21
R1 08-027	31-84	5.21
R1 08-219	31-88	5.21
R1 08-223	31-93	5.21
R1 08-224	31-92	5.21
R1 08-242	31-89	5.21
R1 09-300	96-464	7.40
R1 09-311	96-434	7.40
R1 09-322	96-550	7.40
R1 09-625	27-62	3.19
R1 09-626	41-127	3.19
R1 09-627	27-106	3.19
R1 09-631	27-109	3.21
R1 09-786	94-98	7.62
R1 09-802	94-171	7.61
R1 11-095	66-42	10.15
R1 11-251	66-84	8.32
R1 11-426	66-96	10.16
R1 12-007	12-127	8.39
R1 12-069	78-41	6.70
R1 12-073	78-48	6.70
R1 12-074	95-127	8.46
R1 12-109	78-63	6.70
R1 12-112	94-263	7.59
R1 12-113	98-336	6.83
R1 12-219	94-140	7.58
R1 12-232	94-218	7.59
R1 12-233	94-219	7.59
R1 12-235	5-96	9.23
R1 12-240	90-64	5.37
R1 12-241	22-99	4.26
R1 12-242	22-49	7.43
R1 12-243	22-53	4.26
R1 12-244	22-46	4.45
R1 12-249	96-167	7.19
R1 12-250	89-166	7.45
R1 12-251	17-74	1.48
R1 12-252	22-71	7.19
R1 12-263	5-34	3.15
R1 12-267	89-13	7.87
R1 12-268	89-36	1.4
R1 12-269	89-3	1.4
R1 12-270	89-73	6.62
R1 12-280	91-241	6.92
R1 12-281	5-75	7.58
R1 12-282	5-74	7.58
R1 12-286	17-60	1.48
R1 12-290	33-179	5.50
R1 12-297	5-109	7.58
R1 12-306	9-11	7.89
R1 12-307	9-7	7.89
R1 12-309	9-55	7.89
R1 12-310	9-58	7.89
R1 12-316	33-181	5.50
R1 12-322	53-246	9.4
R1 12-324	53-209	9.4
R1 12-325	53-210	9.4
R1 12-326	53-211	9.4
R1 12-328	91-352	9.10
R1 12-330	53-13	9.10
R1 12-332	53-12	9.10
R1 12-335	53-207	9.4
R1 12-341	53-144	1.37
R1 12-345	22-107	4.22
R1 12-346	22-45	4.22
R1 12-352	21-189	8.42
R1 12-356	46-50	4.37
R1 12-383	53-208	9.4
R1 12-439	90-70	5.39
R1 12-440	90-163	5.39
R1 12-443	90-106	5.39
R1 12-448	47-58	7.43
R1 12-450	47-93	7.43
R1 12-452	47-118	4.19
R1 12-454	47-25	4.19
R1 12-455	47-24	4.19
R1 12-460	47-149	4.19
R1 12-500	8-78	1.13
R1 12-504	8-16	1.13
R1 12-511	8-59	1.21
R1 12-535	90-58	4.27
R1 12-606	90-183	5.39
R1 12-626	34-92	4.9
R1 12-688	41-960	1.25
R1 12-705	47-21	4.18
R1 12-706	47-19	4.18
R1 12-707	47-20	4.18
R1 12-710	47-23	4.16
R1 12-726	21-160	8.9
R1 12-727	21-141	8.9
R1 12-734	47-22	4.16
R1 12-740	47-96	4.18
R1 12-742	47-97	4.18
R1 12-914	35-36	4.15
R1 12-921	27-108	3.21
R1 12-928	22-90	4.44
R1 12-933	22-92	4.44
R1 12-943	17-3	1.48
R1 12-949	5-61	7.65
R1 12-952	86-41	1.21
R1 12-963	86-91	1.31
R1 12-964	86-93	1.31
R1 12-967	86-92	1.31
R1 12-970	22-123	4.42
R1 12-971	22-124	4.42
R1 12-975	22-144	7.46
R1 12-989	22-111	4.26
R1 13-012	90-281	5.34
R1 13-017	90-291	5.34
R1 13-051	5-42	2.18
R1 13-052	5-43	2.19
R1 13-055	5-101	2.18
R1 13-056	29-45	3.18
R1 13-151	78-61	6.64
R1 13-179	19-20	2.9
R1 13-207	19-80	2.9
R1 13-212	19-79	2.9
R1 14-317	89-341	2.7
R1 14-743	39-386	8.30
R1 14-745	39-387	8.30
R1 14-750	39-355	8.30
R1 14-752	39-357	8.30
R1 14-753	39-358	8.30
R1 14-928	96-467	7.55
R1 14-931	96-562	7.56
R1 15-010	96-435	7.57
R1 15-011	96-436	7.57
R1 15-012	96-437	7.57
R1 15-013	96-438	7.57
R1 15-014	96-439	7.57
R1 15-015	96-440	7.57
R1 15-016	96-441	7.57
R1 15-017	96-442	7.57
R1 15-018	96-443	7.57
R1 15-020	96-538	7.57
R1 15-054	96-329	7.55
R1 15-058	96-115	7.51
R1 15-078	96-71	7.32
R1 15-079	96-152	7.32
R1 15-080	96-153	7.32
R1 15-103	17-9	1.48
R1 15-127	86-88	1.32
R1 15-128	86-87	1.31
R1 15-130	86-55	1.27
R1 15-131	5-62	7.65
R1 15-148	89-127	7.87
R1 15-151	89-128	9.18
R1 15-153	89-304	9.18
R1 15-228	89-1	1.44
R1 15-232	27-63	3.15
R1 15-233	27-65	3.15
R1 15-240	27-54	3.15
R1 15-257	18-103	9.21
R1 15-260	18-104	1.8
R1 15-296	20-60	8.2
R1 15-298	20-65	8.2
R1 15-906	10-26	4.19
R1 15-907	95-110	6.92
R1 15-912	94-95	5.27
R1 15-936	89-90	7.88
R1 15-944	30-35	5.21
R1 15-951	45-24	4.18
R1 15-952	35-51	4.14
R1 15-993	96-86	7.48
R1 15-996	90-232	4.22
R1 16-000	98-324	6.92
R1 16-055	5-80	8.5
R1 17-092	93-307	6.50
R1 17-093	93-306	6.50
R1 17-094	93-308	6.50
R1 17-097	93-311	6.50
R1 17-099	93-313	6.50
R1 17-115	5-118	2.6
R1 17-130	53-29	9.14
R1 17-131	53-230	9.14
R1 17-375	78-151	8.35
R1 17-383	94-119	7.62
R1 17-385	94-122	7.62
R1 17-386	90-92	5.39
R1 17-390	69-65	8.31
R1 17-402	96-320	7.58
R1 17-403	96-559	7.48
R1 18-230	96-211	7.48
R1 18-231	96-210	7.48
R1 18-232	96-233	7.48
R1 18-240	21-178	8.10
R1 18-328	96-110	7.48
R1 18-329	96-60	7.48
R1 18-331	95-339	3.20
R1 18-333	96-13	7.55
R1 18-336	94-120	7.62
R1 18-337	94-123	7.62
R1 18-360	94-52	7.60
R1 18-361	94-112	7.60
R1 18-365	94-154	7.60
R1 18-366	94-155	7.60
R1 18-369	94-172	7.60
R1 18-375	94-176	7.62
R1 18-429	47-55	4.22
R1 18-430	47-108	4.23
R1 18-431	89-116	8.11

OEM NO.	MIDWEST PART NO.	BOOK PAGE
R1 18-432	96-227	7.43
R1 18-433	47-56	4.23
R1 18-530	90-99	5.45
R1 18-531	90-201	5.45
R1 18-533	90-357	5.45
R1 18-534	90-358	5.45
R1 18-537	90-328	5.45
R1 18-672	98-288	6.83
R1 18-675	98-333	6.83
R1 18-827	22-91	4.44
R1 18-931	18-107	1.6
R1 18-932	18-106	1.6
R1 19-050	90-367	5.28
R1 19-052	90-368	5.28
R1 19-055	90-53	5.36
R1 19-059	90-90	5.36
R1 19-061	90-88	5.36
R1 19-063	90-85	5.27
R1 19-072	10-30	4.35
R1 19-073	90-184	4.35
R1 19-078	47-56	4.23
R1 19-079	47-60	4.23
R1 19-080	47-109	4.22
R1 19-093	8-85	1.31
R1 19-114	8-88	1.31
R1 19-240	11-80	1.32
R1 19-241	11-79	1.32
R1 19-243	11-83	1.30
R1 19-244	11-81	1.30
R1 19-247	11-72	1.29
R1 19-261	5-85	1.36
R1 19-265	21-90	8.44
R1 19-281	53-296	1.34
R1 19-312	90-89	5.39
R1 19-316	90-170	4.30
R1 19-317	10-35	4.20
R1 19-319	90-86	5.39
R1 19-325	8-75	1.26
R1 19-349	94-33	7.62
R1 19-350	94-55	7.62
R1 19-351	96-293	7.40
R1 19-362	95-177	3.20
R1 19-384	96-84	7.48
R1 19-475	78-33	6.62
R1 19-476	78-51	6.62
R1 19-483	78-169	1.22
R1 19-494	95-113	3.20
R1 19-506	47-26	4.20
R1 19-513	90-68	4.33
R1 19-514	94-85	7.62
R1 19-520	96-419	7.89
R1 19-522	33-24	5.28
R1 19-524	96-551	7.89
R1 19-525	96-552	7.89
R1 19-537	90-167	4.30
R1 19-555	36-304	5.13
R1 19-570	33-180	5.28
R1 19-571	33-109	5.28
R1 19-572	95-308	5.28
R1 19-573	33-194	5.28
R1 19-577	33-193	5.28
R1 19-641	89-83	1.15
R1 19-642	89-84	1.15
R1 19-644	8-56	1.21
R1 19-652	19-43	2.14
R1 19-677	33-195	5.25
R1 19-682	33-182	5.30
R1 19-684	33-187	5.27
R1 19-685	33-184	5.27
R1 19-686	33-183	5.30
R1 19-687	36-305	5.13
R1 19-689	33-183	5.30
R1 19-698	32-111	5.28
R1 19-699	32-126	5.37
R1 19-772	53-161	1.37
R1 19-773	11-44	1.23
R1 19-774	96-352	7.52

OEM NO.	MIDWEST PART NO.	BOOK PAGE
R1 19-782	53-161	1.37
R1 19-881	12-129	8.39
R1 19-953	22-79	7.46
R1 19-956	22-1	4.45
R1 19-958	22-3	7.46
R1 20-007	98-312	6.83
R1 20-008	98-319	6.83
R1 20-010	96-281	7.34
R1 20-016	96-19	7.32
R1 20-017	96-348	7.40
R1 20-018	96-199	7.48
R1 20-019	96-20	7.45
R1 20-020	96-85	7.48
R1 20-021	95-309	7.32
R1 20-022	98-339	6.25
R1 20-023	91-310	6.87
R1 20-025	98-285	6.83
R1 20-027	98-320	6.83
R1 20-028	98-286	6.83
R1 20-029	98-334	6.34
R1 20-030	98-309	6.98
R1 20-031	95-310	6.92
R1 20-033	95-76	6.92
R1 20-034	95-62	6.92
R1 20-036	98-360	6.23
R1 20-038	91-283	6.62
R1 20-039	91-284	6.70
R1 20-042	98-345	6.83
R1 20-045	95-343	6.87
R1 20-047	96-61	7.48
R1 20-051	91-74	6.47
R1 20-054	94-139	7.58
R1 20-055	94-138	7.58
R1 20-057	98-289	6.83
R1 20-058	98-276	6.83
R1 20-059	98-318	6.83
R1 20-060	98-256	6.83
R1 20-061	98-291	6.83
R1 20-062	95-108	6.87
R1 20-063	95-342	6.87
R1 20-064	95-71	6.87
R1 20-065	96-336	7.43
R1 20-067	96-348	7.40
R1 20-072	98-264	6.83
R1 20-073	98-293	6.83
R1 20-074	98-294	6.83
R1 20-075	98-295	6.83
R1 20-081	95-314	7.43
R1 20-082	95-416	6.91
R1 20-084	91-271	6.91
R1 20-085	91-272	6.96
R1 20-090	98-273	6.83
R1 20-091	98-305	6.83
R1 20-092	94-137	6.25
R1 20-095	98-272	6.34
R1 20-099	98-301	6.83
R1 20-125	96-407	7.40
R1 20-126	96-406	7.40
R1 20-127	96-421	7.40
R1 20-140	96-484	7.41
R1 20-211	98-374	6.76
R1 20-212	98-375	6.76
R1 20-213	98-376	6.76
R1 20-214	98-377	6.76
R1 20-215	98-378	6.76
R1 20-216	98-379	6.76
R1 20-217	98-380	6.76
R1 20-218	98-381	6.76
R1 20-219	98-382	6.76
R1 20-220	98-383	6.76
R1 20-420	98-361	6.83
R1 20-422	98-354	6.83
R1 23-030	93-314	6.50
R1 23-038	93-330	6.50
R1 24-062	91-520	6.47
R1 24-064	91-518	6.47
R1 24-205	96-130	7.40

OEM NO.	MIDWEST PART NO.	BOOK PAGE
R1 24-206	96-129	7.40
R1 24-217	96-169	7.34
R1 24-232	96-185	7.32
R1 24-462	91-432	6.43
R1 24-465	91-436	6.43
R1 24-466	91-437	6.43
R1 24-467	91-438	6.43
R1 24-998	53-265	1.45
R1 25-000	96-202	7.51
R1 25-003	53-288	1.44
R1 25-004	53-287	1.45
R1 25-020	95-101	1.37
R1 25-024	89-47	9.19
R1 25-025	53-247	1.45
R1 25-028	5-30	1.5
R1 25-029	5-31	1.5
R1 25-030	5-32	1.5
R1 25-031	5-33	1.5
R1 25-032	5-129	1.5
R1 25-033	53-321	1.45
R1 25-046	53-286	1.44
R1 25-053	96-69	7.34
R1 25-054	96-70	7.34
R1 25-056	5-64	8.5
R1 25-102	95-321	8.32
R1 25-103	95-236	7.32
R1 25-122	41-886	13.9
R1 25-124	41-890	6.97
R1 25-190	90-128	5.38
R1 25-191	90-300	5.38
R1 25-201	17-62	1.10
R1 25-230	89-112	7.87
R1 25-231	90-107	4.30
R1 25-233	95-238	7.83
R1 25-234	27-71	3.21
R1 25-236	5-86	9.19
R1 25-237	27-72	3.21
R1 25-238	27-73	3.21
R1 25-239	27-96	3.11
R1 25-245	21-106	8.9
R1 25-247	11-72	1.29
R1 25-250	25-78	8.49
R1 25-251	25-77	8.49
R1 25-254	89-320	13.14
R1 25-264	89-242	13.14
R1 25-265	89-242	13.14
R1 25-266	89-280	1.44
R1 25-279	27-97	3.22
R1 25-280	95-149	5.27
R1 25-282	96-124	7.45
R1 25-283	96-119	7.45
R1 25-284	96-120	7.45
R1 25-285	96-121	7.32
R1 25-286	96-122	7.32
R1 25-287	96-172	7.32
R1 25-288	96-173	7.45
R1 25-291	96-123	7.45
R1 25-295	96-41	7.48
R1 25-300	95-241	6.64
R1 25-305	95-190	7.82
R1 25-306	95-103	1.37
R1 25-308	95-223	7.38
R1 25-309	95-327	7.32
R1 25-311	95-105	6.92
R1 25-317	95-328	7.34
R1 25-319	78-47	7.40
R1 25-323	95-325	7.32
R1 25-330	95-360	3.20
R1 25-377	96-411	7.32
R1 25-380	96-121	7.32
R1 25-381	96-408	7.32
R1 25-389	96-155	7.32
R1 25-390	96-156	7.45
R1 25-392	96-332	7.43
R1 25-393	96-190	7.48
R1 25-394	96-334	7.32
R1 25-395	96-196	7.51

OEM NO.	MIDWEST PART NO.	BOOK PAGE
R1 25-396	94-134	7.58
R1 25-397	96-413	7.40
R1 25-400	95-140	6.96
R1 25-402	95-372	7.10
R1 25-403	95-173	6.23
R1 25-404	98-372	6.87
R1 25-412	53-29	9.14
R1 25-413	53-316	9.14
R1 25-414	53-297	9.14
R1 25-420	58-284	7.62
R1 25-421	58-285	7.62
R1 25-444	53-322	1.35
R1 25-453	95-316	7.34
R1 25-454	27-76	3.21
R1 25-460	17-61	1.49
R1 25-463	17-64	1.49
R1 25-464	17-65	1.49
R1 25-483	53-264	1.35
R1 25-489	53-219	1.35
R1 25-494	90-280	5.38
R1 25-495	90-126	5.37
R1 25-504	53-157	1.45
R1 25-505	17-43	1.49
R1 25-506	17-44	4.33
R1 25-533	17-35	1.51
R1 25-534	17-36	1.51
R1 25-536	17-72	1.49
R1 25-537	78-46	7.37
R1 25-540	17-45	1.48
R1 25-545	25-86	8.50
R1 25-558	90-127	5.34
R1 25-563	12-130	8.39
R1 25-564	12-181	8.39
R1 25-566	12-231	8.39
R1 25-608	95-114	6.83
R1 25-625	90-278	5.19
R1 25-635	90-244	5.38
R1 25-638	90-207	5.19
R1 25-639	94-141	5.30
R1 25-651	94-170	7.61
R1 25-696	94-169	7.62
R1 25-699	95-171	7.45
R1 25-910	90-302	5.34
R1 25-913	90-129	5.38
R1 25-914	90-130	5.38
R1 25-927	95-318	6.92
R1 25-941	96-232	7.45
R1 25-942	96-230	7.45
R1 25-969	96-94	7.57
R1 25-972	89-91	4.53
R1 25-973	57-92	4.51
R1 25-974	57-96	4.51
R1 25-976	70-123	9.9
R1 25-979	70-120	9.9
R1 25-980	96-174	7.45
R1 25-981	96-175	7.45
R1 25-982	96-176	5.30
R1 26-010	95-340	6.87
R1 26-011	95-341	6.87
R1 26-021	21-118	8.6
R1 26-048	95-320	6.23
R1 26-050	89-191	8.11
R1 26-056	47-82	4.18
R1 26-058	47-83	4.18
R1 26-063	96-178	7.43
R1 26-064	96-179	7.43
R1 26-068	96-265	7.34
R1 26-071	96-315	7.34
R1 26-073	96-416	7.32
R1 26-076	96-160	7.32
R1 26-078	91-287	6.64
R1 26-079	91-313	6.64
R1 26-080	91-314	6.64
R1 26-085	89-120	1.5
R1 26-086	89-119	1.5
R1 26-087	89-181	1.5
R1 26-088	89-230	1.5

OEM NO.	MIDWEST PART NO.	BOOK PAGE
R1 26-089	17-53	1.51
R1 26-090	17-54	1.51
R1 26-091	17-51	1.51
R1 26-092	17-50	1.51
R1 26-093	17-52	1.51
R1 26-094	5-99	2.16
R1 26-095	19-22	2.11
R1 26-096	19-57	2.11
R1 26-100	8-74	1.22
R1 26-101	90-152	4.27
R1 26-102	90-151	4.27
R1 26-103	27-60	3.21
R1 26-104	27-61	3.21
R1 26-106	17-49	1.51
R1 26-108	90-240	4.27
R1 26-109	25-60	8.49
R1 26-110	86-42	1.22
R1 26-121	47-113	4.17
R1 26-122	8-71	1.32
R1 26-131	86-84	1.31
R1 26-132	86-84	1.31
R1 26-143	8-99	1.31
R1 26-146	19-60	2.14
R1 26-149	86-85	1.32
R1 26-154	8-71	1.32
R1 26-155	86-50	1.31
R1 26-157	53-151	9.11
R1 26-160	53-193	1.37
R1 26-161	53-298	1.37
R1 26-187	89-281	4.53
R1 26-188	89-110	4.52
R1 26-189	89-129	4.53
R1 26-192	47-89	4.19
R1 26-193	47-162	4.19
R1 26-196	5-63	7.65
R1 26-206	96-159	7.32
R1 26-209	96-162	7.36
R1 26-210	96-163	7.32
R1 26-211	96-164	7.36
R1 26-213	96-166	7.32
R1 26-223	89-201	4.30
R1 26-234	86-34	1.21
R1 26-236	86-41	1.21
R1 26-245	78-148	6.108
R1 26-254	90-208	4.26
R1 26-258	95-411	7.32
R1 26-259	96-479	7.32
R1 26-267	53-20	9.11
R1 26-272	95-423	7.32
R1 26-286	90-409	4.29
R1 26-300	93-259	6.70
R1 26-301	93-260	6.70
R1 26-318	90-200	5.37
R1 26-344	89-145	8.11
R1 26-346	89-111	4.52
R1 26-352	86-49	4.52
R1 26-356	86-47	4.53
R1 26-363	95-174	1.37
R1 26-378	89-71	9.18
R1 26-422	93-373	6.57
R1 26-423	93-273	6.62
R1 26-428	89-252	8.42
R1 26-430	53-284	1.44
R1 26-431	22-98	4.45
R1 26-435	17-40	1.50
R1 26-440	17-58	1.50
R1 26-441	89-149	4.52
R1 26-442	57-78	4.52
R1 26-443	17-57	1.52
R1 26-445	57-77	4.52
R1 26-446	21-136	8.5
R1 26-447	17-75	1.50
R1 26-450	96-461	7.57
R1 26-452	95-229	7.32
R1 26-455	17-45	1.48
R1 26-477	7-45	1.15
R1 26-481	21-166	8.7

OEM NO.	MIDWEST PART NO.	BOOK PAGE
R1 26-483	83-10	5.38
R1 26-484	90-231	5.38
R1 26-485	27-53	3.15
R1 26-487	123-5	4.48
R1 26-488	123-6	4.48
R1 26-493	27-68	3.15
R1 26-500	96-308	7.48
R1 26-517	104-13	2.17
R1 26-518	104-14	2.17
R1 26-519	104-15	2.17
R1 26-524	19-77	2.11
R1 26-538	89-258	4.9
R1 26-560	123-7	4.47
R1 26-561	123-8	4.47
R1 26-564	123-10	4.48
R1 26-565	123-11	4.48
R1 26-566	123-12	4.48
R1 26-599	70-130	1.43
R1 26-655	25-85	8.48
R1 26-689	18-187	1.9
R1 26-690	18-188	1.9
R1 26-695	18-190	1.9
R1 26-696	18-191	1.9
R1 26-698	18-193	1.9
R1 26-717	57-88	4.51
R1 26-725	57-90	4.49
R1 26-739	96-270	7.51
R1 26-740	96-271	7.51
R1 26-741	96-269	7.43
R1 26-753	89-278	3.21
R1 26-800	96-158	7.32
R1 26-803	96-471	7.32
R1 26-806	96-599	4.49
R1 28-013	98-358	6.11
R1 28-014	98-359	6.11
R1 28-015	71-137	8.46
R1 28-016	71-138	8.46
R1 28-018	89-238	6.98
R1 28-026	91-288	6.70
R1 28-029	91-528	6.70
R1 28-030	91-529	6.70
R1 28-031	91-530	6.70
R1 28-032	91-531	6.70
R1 28-042	96-295	7.42
R1 28-043	96-321	7.42
R1 28-044	96-294	7.41
R1 28-046	96-451	7.57
R1 28-050	96-460	7.57
R1 28-062	96-256	7.57
R1 28-063	88-57	7.85
R1 28-065	88-49	7.86
R1 28-066	88-52	7.86
R1 28-068	90-224	4.29
R1 28-071	90-166	4.30
R1 28-072	27-74	3.21
R1 28-073	27-75	3.21
R1 28-074	95-226	1.46
R1 28-076	35-54	4.16
R1 28-080	27-94	3.21
R1 28-081	95-356	6.64
R1 28-088	116-6	2.23
R1 28-102	47-100	4.35
R1 28-105	90-238	5.35
R1 28-106	90-212	5.35
R1 28-107	90-213	5.35
R1 28-108	26-110	8.42
R1 28-110	90-214	5.35
R1 28-112	47-111	4.17
R1 28-115	88-53	6.78
R1 28-126	22-97	4.26
R1 28-127	96-268	7.40
R1 28-129	90-202	4.26
R1 28-130	90-219	5.35
R1 28-131	90-220	5.35
R1 28-132	90-221	5.35
R1 28-133	90-222	5.35
R1 28-135	90-330	5.35
R1 28-137	90-331	5.35
R1 28-139	78-187	4.30
R1 28-168	5-115	2.22
R1 28-170	5-102	2.22
R1 28-171	5-103	2.22
R1 28-172	5-104	2.22
R1 28-173	5-106	2.22
R1 28-174	5-107	2.22
R1 28-175	5-105	2.22
R1 28-177	5-111	2.22
R1 28-178	5-112	2.22
R1 28-180	90-349	4.59
R1 28-181	90-347	4.59
R1 28-182	90-351	4.33
R1 28-183	90-348	4.59
R1 28-185	90-352	4.59
R1 28-190	90-329	4.29
R1 28-460	89-351	6.39
R1 28-598	70-139	1.43
R1 28-600	70-131	1.43
R1 28-601	70-133	1.43
R1 28-602	70-134	1.43
R1 28-603	70-135	1.43
R1 28-610	14-27	1.43
R1 28-622	70-142	1.43
R1 28-623	70-143	1.43
R1 28-624	70-144	1.43
R1 28-625	70-145	1.43
R1 28-626	53-294	1.44
R1 28-627	53-295	1.46
R1 28-815	21-123	8.42
R1 28-818	95-413	1.46
R1 28-924	105-13	2.9
R1 28-928	105-1	2.9
R1 28-929	105-2	2.9
R1 28-932	105-12	2.9
R1 28-933	105-13	2.9
R1 30-800	96-236	7.34
R1 30-803	96-337	7.43
R1 30-809	96-234	7.34
R1 30-900	96-503	7.34
R1 30-901	96-505	7.34
R1 30-902	96-482	7.34
R1 30-903	96-338	7.34
R1 31-106	83-7	2.6
R1 31-107	83-9	2.6
R1 31-110	32-119	5.28
R1 31-115	83-8	2.6
R1 31-120	66-76	5.38
R1 31-622	105-1	2.9
R1 36-204	41-888	6.23
R1 36-230	90-246	5.38
R1 37-251	89-128	9.18
R1 46-101	22-155	4.46
R1 46-102	22-154	4.46
R1 46-104	22-152	4.46
R1 46-105	22-153	4.46
R1 46-106	22-151	4.22
R1 47-113	47-121	4.17
R1 49-055	95-219	6.86
R1 49-056	95-220	6.86
R1 49-057	95-292	6.86
R1 49-058	95-293	6.86
R1 49-059	95-294	6.86
R1 49-060	95-295	6.86
R1 49-103	96-309	7.48
R1 49-105	96-481	7.52
R1 49-106	98-266	6.92
R1 49-119	93-422	6.58
R1 49-121	98-364	6.94
R1 49-122	98-331	6.94
R1 49-123	98-267	6.92
R1 49-124	98-332	6.87
R1 54-000	98-329	6.34
R1 54-058	95-221	6.98
R1 54-061	95-102	1.37
R1 54-065	95-324	7.34
R1 54-073	95-380	7.87
R1 54-074	98-275	6.98
R1 54-150	95-403	8.33
R1 54-191	78-95	7.38
R1 54-207	95-370	5.30
R1 54-210	78-155	1.46
R1 54-212	78-149	1.54
R1 54-240	77-113	1.36
R1 54-250	98-325	6.34
R1 54-324	95-185	5.27
R1 54-331	95-196	5.30
R1 54-332	95-235	5.27
R1 54-349	95-111	3.20
R1 54-373	95-206	3.20
R1 54-376	95-205	3.20
R1 54-377	95-326	3.20
R1 54-383	95-400	3.20
R1 54-384	95-399	3.10
R1 54-387	95-401	3.20
R1 56-003	95-253	7.48
R1 56-004	96-93	7.57
R1 56-005	96-94	7.57
R1 56-006	96-95	7.57
R1 56-007	96-96	7.57
R1 56-045	93-290	6.57
R1 56-046	93-291	6.57
R1 56-049	93-294	6.57
R1 56-054	93-275	6.57
R1 56-059	93-280	6.57
R1 56-070	93-283	6.57
R1 56-079	93-370	6.57
R1 56-081	93-371	6.57
R1 56-082	93-388	6.57
R1 56-086	93-365	6.57
R1 56-087	93-366	6.57
R1 56-088	93-367	6.57
R1 56-094	93-428	6.57
R1 56-096	93-430	6.57
R1 56-153	96-540	7.42
R1 56-208	96-594	7.40
R1 56-209	96-595	7.40
R1 56-210	96-596	7.40
R1 56-223	53-300	1.33
R1 56-227	53-341	1.34
R1 56-229	53-319	1.33
R1 56-270	95-384	7.32
R1 56-271	95-383	7.32
R1 56-272	95-382	7.32
R1 56-273	96-432	7.32
R1 56-277	96-231	7.32
R1 56-278	96-444	7.32
R1 56-279	96-445	7.32
R1 56-280	96-446	7.32
R1 56-281	96-447	7.32
R1 56-282	96-448	7.32
R1 56-283	96-449	7.32
R1 56-284	96-450	7.32
R1 56-285	95-375	7.32
R1 56-286	95-376	7.32
R1 56-301	96-226	7.32
R1 56-302	96-473	7.32
R1 56-303	96-312	7.32
R1 56-305	95-232	7.32
R1 56-308	96-204	7.24
R1 56-309	96-591	7.32
R1 56-310	95-230	7.32
R1 56-311	95-425	7.32
R1 56-313	95-426	7.32
R1 56-315	95-427	7.32
R1 56-317	95-428	7.32
R1 56-319	96-311	7.32
R1 56-320	96-483	7.34
R1 56-322	96-507	7.26
R1 56-323	96-508	7.26
R1 56-324	96-509	7.26
R1 56-325	96-510	7.26
R1 56-326	96-511	7.26
R1 56-327	96-512	7.26
R1 56-328	96-513	7.26
R1 56-329	96-514	7.26
R1 56-330	96-515	7.26
R1 56-332	96-517	7.26
R1 56-333	96-518	7.26
R1 56-334	96-519	7.26
R1 56-335	96-520	7.26
R1 56-336	96-502	7.34
R1 56-339	96-498	7.26
R1 56-340	96-499	7.26
R1 56-341	96-500	7.26
R1 56-342	96-501	7.26
R1 56-343	96-486	7.26
R1 56-344	96-487	7.26
R1 56-345	96-488	7.26
R1 56-346	96-489	7.26
R1 56-347	96-490	7.26
R1 56-348	96-491	7.26
R1 56-349	96-492	7.26
R1 56-350	96-493	7.26
R1 56-351	96-494	7.26
R1 56-352	96-495	7.26
R1 56-353	96-496	7.26
R1 56-354	96-497	7.26
R1 56-360	96-526	7.26
R1 56-361	96-525	7.26
R1 56-362	96-524	7.26
R1 56-363	96-523	7.26
R1 56-364	96-522	7.26
R1 56-365	96-521	7.26
R1 56-402	90-197	4.26
R1 56-407	90-64	5.37
R1 64-013	32-34	5.48
R1 64-021	32-124	5.48
R1 64-029	32-186	5.48
R1 64-037	32-192	5.48
R1 64-039	32-109	5.30
R1 64-043	32-104	5.27
R1 64-053	32-139	5.48
R1 64-054	32-133	5.29
R1 64-089	32-193	5.48
R1 64-090	32-196	5.48
R1 64-095	32-197	5.48
R2 010370	5-101	2.18
R2 010404	5-42	2.18
R2 010410	5-43	2.19
R2 010418	71-138	8.46
R2 010420	71-137	8.46
R2 010440	89-73	6.62
R2 010446	89-351	6.39
R2 010493	91-313	6.64
R2 010495	91-288	6.70
R2 010502	91-287	6.64
R2 010520	95-356	6.64
R2 010526	91-528	6.70
R2 010527	91-529	6.70
R2 010528	91-530	6.70
R2 010529	91-531	6.70
R2 010531	91-518	6.47
R2 010535	91-520	6.47
R2 010551	91-284	6.70
R2 010563	91-283	6.62
R2 010583	91-74	6.47
R2 010800	93-290	6.57
R2 010801	93-291	6.57
R2 010804	93-294	6.57
R2 010821	93-275	6.57
R2 010826	93-280	6.57
R2 010851	93-283	6.57
R2 010862	93-388	6.57
R2 010864	93-371	6.57
R2 010871	93-365	6.57
R2 010872	93-366	6.57
R2 010873	93-367	6.57
R2 010881	93-428	6.57
R2 010883	93-430	6.57
R2 010915	93-422	6.58
R2 011100	93-373	6.57
R2 011102	93-273	6.62
R2 011502	91-432	6.43
R2 011510	91-436	6.43
R2 011511	91-437	6.43
R2 011512	91-438	6.43
R2 011930	93-314	6.50
R2 011950	93-330	6.50
R2 020000	88-53	6.78
R2 020006	95-108	6.87
R2 020008	95-340	6.87
R2 020013	95-341	6.87
R2 020078	95-219	6.86
R2 020079	95-220	6.86
R2 020080	95-292	6.86
R2 020081	95-293	6.86
R2 020082	95-294	6.86
R2 020083	95-295	6.86
R2 020090	98-273	6.83
R2 020145	98-264	6.83
R2 020146	98-293	6.83
R2 020147	98-294	6.83
R2 020148	98-295	6.83
R2 020149	98-318	6.83
R2 020150	98-301	6.83
R2 020203	98-333	6.83
R2 020208	98-288	6.83
R2 020211	98-374	6.76
R2 020212	98-375	6.76
R2 020213	98-376	6.76
R2 020214	98-377	6.76
R2 020215	98-378	6.76
R2 020216	98-379	6.76
R2 020217	98-380	6.76
R2 020218	98-381	6.76
R2 020219	98-382	6.76
R2 020220	98-383	6.76
R2 020222	98-319	6.83
R2 020252	95-114	6.83
R2 020312	98-312	6.83
R2 020313	98-266	6.92
R2 020349	95-110	6.92
R2 020350	98-372	6.87
R2 020500	89-238	6.98
R2 020505	98-334	6.34
R2 020507	98-325	6.34
R2 020515	98-329	6.34
R2 020519	98-272	6.34
R2 020521	98-358	6.11
R2 020524	98-275	6.98
R2 020526	98-305	6.83
R2 020527	94-137	6.25
R2 020531	21-123	8.42
R2 020551	98-324	6.92
R2 020552	98-359	6.11
R2 020580	98-364	6.94
R2 020581	98-331	6.94
R2 030003	89-71	9.18
R2 030006	89-1	1.44
R2 030011	89-47	9.19
R2 030016	89-128	9.18
R2 030019	89-304	9.18
R2 030195	89-280	1.44
R2 030230	95-101	1.37
R2 030231	95-174	1.37
R2 030236	53-193	1.37
R2 030238	53-298	1.37
R2 030239	53-161	1.37
R2 030241	53-161	1.37
R2 030250	70-131	1.43
R2 030251	70-133	1.43
R2 030252	70-134	1.43
R2 030253	70-135	1.43
R2 030257	70-130	1.43
R2 030260	70-143	1.43
R2 030270	70-139	1.43

OEM NO.	MIDWEST PART NO.	BOOK PAGE
R2 030273	70-144	1.43
R2 030274	70-145	1.43
R2 030275	70-142	1.43
R2 030331	95-76	6.92
R2 030340	95-310	6.92
R2 030344	95-62	6.92
R2 030345	95-318	6.92
R2 030346	95-320	6.23
R2 030347	98-360	6.23
R2 030525	5-85	1.36
R2 030562	53-219	1.35
R2 030568	53-264	1.35
R2 030571	17-62	1.10
R2 030575	53-322	1.35
R2 030605	53-296	1.34
R2 030621	53-300	1.33
R2 030624	53-341	1.34
R2 030627	53-319	1.33
R2 030900	5-86	9.19
R2 030904	95-238	7.83
R2 030920	53-297	9.14
R2 030925	53-29	9.14
R2 030926	53-230	9.14
R2 030936	53-29	9.14
R2 030937	53-316	9.14
R2 031000	91-241	6.92
R2 031020	70-120	9.9
R2 031021	70-123	9.9
R2 031023	53-151	9.11
R2 031115	53-246	9.4
R2 031118	53-209	9.4
R2 031119	53-210	9.4
R2 031183	18-103	9.21
R2 040243	12-129	8.39
R2 040244	12-130	8.39
R2 040245	12-181	8.39
R2 040247	12-231	8.39
R2 040320	69-65	8.31
R2 040406	39-355	8.30
R2 040408	39-357	8.30
R2 040409	39-358	8.30
R2 040430	39-387	8.30
R2 040434	39-386	8.30
R2 050010	22-79	7.46
R2 050015	22-71	7.19
R2 050016	22-49	7.43
R2 050020	96-232	7.45
R2 050025	47-93	7.43
R2 050026	47-58	7.43
R2 050028	96-230	7.45
R2 050031	96-172	7.32
R2 050033	96-124	7.45
R2 050035	96-176	5.30
R2 050036	96-174	7.45
R2 050037	96-227	7.43
R2 050038	96-167	7.19
R2 050050	89-166	7.45
R2 050054	96-20	7.45
R2 050058	96-123	7.45
R2 050059	95-171	7.45
R2 050060	96-120	7.45
R2 050062	96-119	7.45
R2 050064	96-173	7.45
R2 050068	96-175	7.45
R2 050090	96-178	7.43
R2 050091	96-179	7.43
R2 050092	96-336	7.43
R2 050336	53-247	1.45
R2 050402	53-287	1.45
R2 050417	53-321	1.45
R2 050420	53-284	1.44
R2 050421	53-288	1.44
R2 050422	53-286	1.44
R2 050433	95-413	1.46
R2 060011	47-25	4.19
R2 060012	47-118	4.19
R2 060015	47-24	4.19
R2 060016	47-89	4.19
R2 060038	10-35	4.20
R2 060056	96-484	7.41
R2 060089	96-348	7.40
R2 060092	96-591	7.32
R2 060093	95-423	7.32
R2 060095	95-426	7.32
R2 060097	95-428	7.32
R2 060100	96-158	7.32
R2 060101	96-159	7.32
R2 060103	96-293	7.40
R2 060107	96-540	7.42
R2 060110	96-294	7.41
R2 060111	96-268	7.40
R2 060117	96-406	7.40
R2 060118	96-421	7.40
R2 060119	96-407	7.40
R2 060122	96-464	7.40
R2 060123	96-130	7.40
R2 060124	96-129	7.40
R2 060200	47-149	4.19
R2 060201	47-162	4.19
R2 060692	96-281	7.34
R2 060695	95-309	7.32
R2 060697	96-311	7.32
R2 060698	95-232	7.32
R2 060700	96-71	7.32
R2 060701	96-152	7.32
R2 060702	96-153	7.32
R2 060705	96-315	7.34
R2 060706	96-432	7.32
R2 060708	96-231	7.32
R2 060710	96-19	7.32
R2 060715	94-140	7.58
R2 060719	96-61	7.48
R2 060722	95-229	7.32
R2 060723	96-411	7.32
R2 060730	96-164	7.36
R2 060731	96-162	7.36
R2 060740	96-166	7.32
R2 060741	96-471	7.32
R2 060750	96-163	7.32
R2 060760	95-375	7.32
R2 060761	96-479	7.32
R2 060762	95-384	7.32
R2 060763	95-376	7.32
R2 060765	95-382	7.32
R2 060766	95-383	7.32
R2 060770	96-226	7.32
R2 060771	96-312	7.32
R2 060772	96-473	7.32
R2 060799	95-316	7.34
R2 060820	95-140	6.96
R2 060821	95-173	6.23
R2 060830	91-271	6.91
R2 060831	91-272	6.96
R2 060901	96-295	7.42
R2 060902	96-321	7.42
R2 060910	96-234	7.34
R2 060951	96-338	7.34
R2 060954	96-265	7.34
R2 060962	96-69	7.34
R2 060963	96-70	7.34
R2 060970	96-236	7.34
R2 061010	96-185	7.32
R2 061040	96-169	7.34
R2 061101	96-507	7.26
R2 061102	96-508	7.26
R2 061103	96-509	7.26
R2 061104	96-510	7.26
R2 061105	96-511	7.26
R2 061106	96-512	7.26
R2 061107	96-513	7.26
R2 061108	96-514	7.26
R2 061109	96-515	7.26
R2 061110	96-517	7.26
R2 061112	96-519	7.26
R2 061113	96-520	7.26
R2 061114	96-526	7.26
R2 061115	96-525	7.26
R2 061116	96-524	7.26
R2 061117	96-523	7.26
R2 061118	96-522	7.26
R2 061119	96-521	7.26
R2 061120	96-486	7.26
R2 061121	96-487	7.26
R2 061122	96-489	7.26
R2 061123	96-490	7.26
R2 061124	96-491	7.26
R2 061125	96-492	7.26
R2 061126	96-493	7.26
R2 061127	96-494	7.26
R2 061128	96-495	7.26
R2 061129	96-496	7.26
R2 061130	96-497	7.26
R2 061137	96-505	7.34
R2 061140	96-483	7.34
R2 061150	96-498	7.26
R2 061151	96-499	7.26
R2 061152	96-500	7.26
R2 061153	96-501	7.26
R2 061155	96-502	7.34
R2 061156	96-503	7.34
R2 070001	96-93	7.57
R2 070002	96-94	7.57
R2 070003	96-95	7.57
R2 070004	96-96	7.57
R2 070006	96-443	7.57
R2 070011	96-115	7.51
R2 070012	95-411	7.32
R2 070013	96-271	7.51
R2 070029	95-253	7.48
R2 070033	96-460	7.57
R2 070034	96-451	7.57
R2 070035	96-256	7.57
R2 070037	96-94	7.57
R2 070056	96-211	7.48
R2 070057	96-210	7.48
R2 070060	96-84	7.48
R2 070061	96-60	7.48
R2 070063	96-13	7.55
R2 070065	96-233	7.48
R2 070066	96-110	7.48
R2 070068	96-199	7.48
R2 070072	95-339	3.20
R2 070074	96-41	7.48
R2 070075	96-308	7.48
R2 070080	96-559	7.48
R2 070081	96-320	7.58
R2 070088	96-204	7.24
R2 070100	96-329	7.55
R2 070119	96-467	7.55
R2 070150	96-461	7.57
R2 070160	96-435	7.57
R2 070161	96-439	7.57
R2 070162	96-441	7.57
R2 070163	96-442	7.57
R2 070164	96-538	7.57
R2 070170	96-436	7.57
R2 070171	96-438	7.57
R2 070173	96-437	7.57
R2 070174	96-440	7.57
R2 070180	5-75	7.58
R2 070181	5-74	7.58
R2 070182	5-109	7.58
R2 070199	47-55	4.22
R2 070201	47-26	4.20
R2 070218	47-56	4.23
R2 070220	47-60	4.23
R2 070221	47-56	4.23
R2 070222	47-108	4.23
R2 070226	10-26	4.19
R2 070300	96-352	7.52
R2 080010	5-61	7.65
R2 080013	5-63	7.65
R2 080020	5-62	7.65
R2 080034	94-119	7.62
R2 080035	94-120	7.62
R2 080044	94-122	7.62
R2 080045	94-123	7.62
R2 080053	94-218	7.59
R2 080054	94-219	7.59
R2 080102	94-52	7.60
R2 080103	94-112	7.60
R2 080129	94-176	7.62
R2 080132	94-172	7.60
R2 080135	94-154	7.60
R2 080136	94-155	7.60
R2 080200	94-33	7.62
R2 080202	94-85	7.62
R2 080204	94-55	7.62
R2 080224	94-141	5.30
R2 080228	94-95	5.27
R2 080237	94-98	7.62
R2 080242	94-170	7.61
R2 080262	94-169	7.62
R2 080300	9-55	7.89
R2 080302	9-58	7.89
R2 080310	9-11	7.89
R2 080311	9-7	7.89
R2 080403	96-419	7.89
R2 080407	96-551	7.89
R2 080408	96-552	7.89
R2 090000	66-96	10.16
R2 090019	95-403	8.33
R2 090580	95-190	7.82
R2 090587	95-241	6.64
R2 090700	95-103	1.37
R2 090716	95-223	7.38
R2 090722	95-327	7.32
R2 090726	95-105	6.92
R2 090737	95-221	6.98
R2 090902	78-63	6.70
R2 090913	78-41	6.70
R2 090918	78-33	6.62
R2 090920	78-51	6.62
R2 090943	78-48	6.70
R2 091014	95-321	8.32
R2 091039	95-102	1.37
R2 091058	78-148	6.108
R2 091066	78-46	7.37
R2 091077	78-47	7.40
R2 091095	95-328	7.34
R2 091096	95-324	7.34
R2 091100	95-236	7.32
R2 091119	95-325	7.32
R2 091142	78-155	1.46
R2 091165	78-149	1.54
R2 091210	95-127	8.46
R2 091250	78-169	1.22
R2 100131	29-45	3.18
R2 100150	96-155	7.32
R2 100151	96-156	7.45
R2 100152	96-332	7.43
R2 100154	96-190	7.48
R2 100155	96-334	7.32
R2 100156	96-196	7.51
R2 100157	94-134	7.58
R2 100158	96-413	7.40
R2 100169	83-9	2.6
R2 110099	35-51	4.14
R2 110110	89-258	4.9
R2 110162	47-113	4.17
R2 110212	34-92	4.9
R2 110490	90-224	4.29
R2 110520	90-151	4.27
R2 110521	90-240	4.27
R2 110526	78-187	4.30
R2 110530	90-329	4.29
R2 110557	47-111	4.17
R2 110566	45-24	4.18
R2 110570	47-109	4.22
R2 111176	35-54	4.16
R2 111179	35-36	4.15
R2 111354	47-21	4.18
R2 111355	47-82	4.18
R2 111356	47-20	4.18
R2 111357	47-83	4.18
R2 111358	47-19	4.18
R2 111384	47-97	4.18
R2 111400	47-23	4.16
R2 111404	47-96	4.18
R2 130009	89-201	4.30
R2 130056	90-328	5.45
R2 130057	90-357	5.45
R2 130058	90-358	5.45
R2 130100	90-183	5.39
R2 130102	90-86	5.39
R2 130104	90-89	5.39
R2 130106	90-163	5.39
R2 130107	90-70	5.39
R2 130108	90-106	5.39
R2 130110	90-92	5.39
R2 130300	90-53	5.36
R2 130302	90-90	5.36
R2 130303	90-88	5.36
R2 130304	90-85	5.27
R2 130309	90-368	5.28
R2 130315	33-24	5.28
R2 130316	90-200	5.37
R2 130319	90-367	5.28
R2 130329	90-170	4.30
R2 130333	90-167	4.30
R2 130338	22-53	4.26
R2 130362	90-184	4.35
R2 130363	90-68	4.33
R2 130400	22-97	4.26
R2 130401	22-99	4.26
R2 130404	22-111	4.26
R2 130431	90-220	5.35
R2 130449	90-231	5.38
R2 130455	90-222	5.35
R2 130456	90-219	5.35
R2 130458	90-221	5.35
R2 130471	90-213	5.35
R2 130472	90-214	5.35
R2 130473	90-212	5.35
R2 130474	90-238	5.35
R2 130481	90-280	5.38
R2 130484	90-127	5.34
R2 130485	90-128	5.38
R2 130486	90-129	5.38
R2 130487	90-130	5.38
R2 130489	90-300	5.38
R2 130494	90-302	5.34
R2 130512	90-246	5.38
R2 130518	90-244	5.38
R2 130528	90-278	5.19
R2 130540	90-207	5.19
R2 130612	90-202	4.26
R2 130616	90-58	4.27
R2 130617	90-152	4.27
R2 130620	90-126	5.37
R2 130638	90-64	5.37
R2 130640	90-107	4.30
R2 130641	90-166	4.30
R2 130650	90-349	4.59
R2 130651	90-347	4.59
R2 130652	90-348	4.59
R2 130653	90-351	4.33
R2 130655	90-352	4.59
R2 140015	95-149	5.27
R2 140020	95-196	5.30
R2 140021	95-235	5.27
R2 140023	95-185	5.27
R2 140024	95-370	5.30
R2 140040	30-4	5.21
R2 140068	30-35	5.21

OEM NO.	MIDWEST PART NO.	BOOK PAGE
R2 140100	31-80	5.21
R2 140101	31-88	5.21
R2 140102	31-89	5.21
R2 140103	31-93	5.21
R2 140121	31-84	5.21
R2 140122	31-85	5.21
R2 140123	31-81	5.21
R2 140125	31-82	5.21
R2 140195	33-195	5.25
R2 140200	36-305	5.13
R2 140202	36-304	5.13
R2 140318	33-183	5.30
R2 140322	33-187	5.27
R2 140324	33-184	5.27
R2 140326	33-182	5.30
R2 140341	33-183	5.30
R2 140357	32-126	5.37
R2 140358	32-111	5.28
R2 140366	33-180	5.28
R2 140367	33-109	5.28
R2 140368	95-308	5.28
R2 140369	33-194	5.28
R2 140372	33-193	5.28
R2 140436	32-139	5.48
R2 140437	32-124	5.48
R2 140440	32-186	5.48
R2 140442	32-192	5.48
R2 140450	32-104	5.27
R2 140451	32-109	5.30
R2 140452	32-196	5.48
R2 140454	32-197	5.48
R2 150090	33-181	5.50
R2 150092	33-179	5.50
R2 160000	5-34	3.15
R2 160007	27-62	3.19
R2 160008	27-53	3.15
R2 160011	27-65	3.15
R2 160012	27-63	3.15
R2 160014	27-106	3.19
R2 160020	27-54	3.15
R2 160026	27-68	3.15
R2 160034	41-127	3.19
R2 160040	27-109	3.21
R2 160050	27-60	3.21
R2 160051	27-61	3.21
R2 160053	27-76	3.21
R2 160060	27-74	3.21
R2 160061	27-75	3.21
R2 160062	27-94	3.21
R2 160072	95-400	3.20
R2 160077	95-205	3.20
R2 160080	95-326	3.20
R2 160082	95-399	3.10
R2 160091	95-177	3.20
R2 160094	95-360	3.20
R2 170050	89-320	13.14
R2 170202	83-7	2.6
R2 170203	83-8	2.6
R2 170210	5-118	2.6
R2 170220	32-119	5.28
R2 170995	5-96	9.23
R2 190010	22-92	4.44
R2 190026	22-90	4.44
R2 190030	22-91	4.44
R2 190044	22-98	4.45
R2 190092	22-46	4.45
R2 190094	22-144	7.46
R2 190097	22-1	4.45
R2 190099	22-3	7.46
R2 190300	105-1	2.9
R2 190301	105-2	2.9
R2 190303	105-13	2.9
R2 190500	123-5	4.48
R2 190502	123-10	4.48
R2 190520	123-6	4.48
R2 190522	123-11	4.48
R2 190524	123-12	4.48
R2 190526	123-8	4.47
R2 190527	123-7	4.47
R2 220005	27-71	3.21
R2 220006	27-72	3.21
R2 220007	27-73	3.21
R2 220043	116-6	2.23
R2 220045	5-115	2.22
R2 220065	89-278	3.21
R2 220090	5-112	2.22
R2 220091	5-103	2.22
R2 220092	5-105	2.22
R2 220093	5-107	2.22
R2 220094	5-111	2.22
R2 220095	5-102	2.22
R2 220096	5-104	2.22
R2 220097	5-106	2.22
R2 230284	86-55	1.27
R2 240082	41-960	1.25
R2 240119	11-44	1.23
R2 240310	19-43	2.14
R2 240350	19-60	2.14
R2 240410	19-22	2.11
R2 240413	19-57	2.11
R2 240450	19-20	2.9
R2 240466	19-77	2.11
R2 240467	19-79	2.9
R2 240468	19-80	2.9
R2 240501	104-14	2.17
R2 240503	104-13	2.17
R2 240504	104-15	2.17
R2 250010	89-13	7.87
R2 250504	89-90	7.88
R2 250510	89-127	7.87
R2 250520	89-112	7.87
R2 250535	89-128	9.18
R2 250705	88-49	7.86
R2 250715	88-52	7.86
R2 250741	88-57	7.85
R2 250780	53-295	1.46
R2 250790	95-226	1.46
R2 250796	95-372	7.10
R2 260001	21-118	8.6
R2 260030	21-166	8.7
R2 260111	5-64	8.5
R2 260113	21-136	8.5
R2 260133	20-60	8.2
R2 260135	20-65	8.2
R2 260360	21-106	8.9
R2 260361	21-141	8.9
R2 260370	21-160	8.9
R2 260440	21-178	8.10
R2 270009	89-252	8.42
R2 270014	25-86	8.50
R2 270020	25-60	8.49
R2 270022	25-78	8.49
R2 270042	21-90	8.44
R2 270101	5-80	8.5
R2 270140	26-110	8.42
R2 270401	25-85	8.48
R2 270405	11-72	1.29
R2 300020	89-3	1.4
R2 300030	89-120	1.5
R2 300031	89-230	1.5
R2 300032	89-181	1.5
R2 300033	89-119	1.5
R2 300151	5-31	1.5
R2 300152	5-30	1.5
R2 300153	5-32	1.5
R2 300154	5-33	1.5
R2 300156	5-129	1.5
R2 300220	89-36	1.4
R2 310106	89-111	4.52
R2 310115	89-149	4.52
R2 310118	57-78	4.52
R2 310122	89-281	4.53
R2 310124	57-77	4.52
R2 310126	17-57	1.52
R2 310128	89-129	4.53
R2 310129	89-110	4.52
R2 310130	89-91	4.53
R2 310153	86-47	4.53
R2 310155	86-49	4.52
R2 310390	57-90	4.49
R2 310395	57-96	4.51
R2 310398	57-88	4.51
R2 310401	57-92	4.51
R2 310505	89-116	8.11
R2 310508	89-191	8.11
R2 310535	89-145	8.11
R2 330001	89-83	1.15
R2 330006	89-84	1.15
R2 330057	7-45	1.15
R2 330061	8-78	1.13
R2 330064	8-16	1.13
R2 330607	8-85	1.31
R2 330612	8-71	1.32
R2 330613	8-71	1.32
R2 330614	8-99	1.31
R2 330616	86-91	1.31
R2 330617	86-92	1.31
R2 330618	86-87	1.31
R2 330619	86-88	1.32
R2 330622	86-50	1.31
R2 330624	86-84	1.31
R2 330625	86-84	1.31
R2 330626	86-85	1.32
R2 330633	86-93	1.31
R2 330634	11-72	1.29
R2 330635	11-83	1.30
R2 330636	11-79	1.32
R2 330637	11-80	1.32
R2 330640	11-81	1.30
R2 330648	8-88	1.31
R2 340311	8-56	1.21
R2 340315	8-59	1.21
R2 340317	8-74	1.22
R2 340371	86-41	1.21
R2 340373	86-42	1.22
R2 340376	86-34	1.21
R2 370000	17-51	1.51
R2 370002	17-52	1.51
R2 370004	17-50	1.51
R2 370006	17-53	1.51
R2 370008	17-54	1.51
R2 370012	17-49	1.51
R2 370015	17-72	1.49
R2 370040	17-35	1.51
R2 370042	17-36	1.51
R2 370057	17-75	1.50
R2 370060	17-40	1.50
R2 370061	17-58	1.50
R2 370070	17-61	1.49
R2 370071	17-64	1.49
R2 370072	17-65	1.49
R2 370073	17-43	1.49
R2 370074	17-44	4.33
R2 370330	17-45	1.48
R2 370334	17-74	1.48
R2 370335	17-60	1.48
R2 370342	17-45	1.48
R2 370550	18-104	1.8
R2 370556	18-107	1.6
R2 370557	18-106	1.6
R2 370570	18-187	1.9
R2 370572	18-188	1.9
R2 370573	18-190	1.9
R2 370575	18-191	1.9
R2 370576	18-193	1.9
R2 380100	66-42	10.15
R2 380216	17-3	1.48
R2 380218	17-9	1.48
R2 380273	66-84	8.32
R2 400219	55-8	11.9
R2 500503	41-888	6.23

OEM NO.	MIDWEST PART NO.	BOOK PAGE

OEM NO.	MIDWEST PART NO.	BOOK PAGE

MIDWEST
Motorcycle Supply

Buy Online at:
www.midwestmcdealerexpress.com



800-325-3914
Local & International: 636-931-3200
www.midwestmc.net / midwest@midwestmc.net
Fax: 800-328-7433/ International Fax: 636-931-3300
2100 Hwy Z, P.O. Box 669, Pevely, MO 63070